*A Joint Standard of AASHTO, ITE, and NEMA*

# NTCIP 1202 Version 03B

## National Transportation Communications for ITS Protocol

## Object Definitions for Actuated Signal Controllers (ASC) Interface

**Published in October 2023**

Published by

American Association of State Highway and Transportation Officials (AASHTO)
444 North Capitol Street, N.W., Suite 249
Washington, D.C. 20001

Institute of Transportation Engineers (ITE)
1627 Eye Street, N.W., Suite 550
Washington, D.C. 20006

National Electrical Manufacturers Association (NEMA)
1300 North 17th Street, Suite 900
Rosslyn, Virginia 22209-3801

# NOTICES

## Copyright Notice

© 2023 by the American Association of State Highway and Transportation Officials (AASHTO), the Institute of Transportation Engineers (ITE), and the National Electrical Manufacturers Association (NEMA). All intellectual property rights, including, but not limited to, the rights of reproduction, translation, and display are reserved under the laws of the United States of America, the Universal Copyright Convention, the Berne Convention, and the International and Pan American Copyright Conventions. Except as licensed or permitted, you may not copy these materials without prior written permission from AASHTO, ITE, or NEMA. Use of these materials does not give you any rights of ownership or claim of copyright in or to these materials.

Visit www.ntcip.org for other copyright information, for instructions to request reprints of excerpts, and to request reproduction that is not granted below.

## PDF File License Agreement

To the extent that these materials are distributed by AASHTO / ITE / NEMA in the form of an Adobe® Portable Document Format (PDF) electronic data file (the “PDF file”), AASHTO / ITE / NEMA authorizes each registered PDF file user to view, download, copy, or print the PDF file available from the authorized Web site, subject to the terms and conditions of this license agreement:

a) you may download one copy of each PDF file for personal, noncommercial, and intraorganizational use only;
b) ownership of the PDF file is not transferred to you; you are licensed to use the PDF file;
c) you may make one more electronic copy of the PDF file, such as to a second hard drive or burn to a CD;
d) you agree not to copy, distribute, or transfer the PDF file from that media to any other electronic media or device;
e) you may print one paper copy of the PDF file;
f) you may make one paper reproduction of the printed copy;
g) any permitted copies of the PDF file must retain the copyright notice, and any other proprietary notices contained in the file;
h) the PDF file license does not include (1) resale of the PDF file or copies, (2) republishing the content in compendiums or anthologies, (3) publishing excerpts in commercial publications or works for hire, (4) editing or modification of the PDF file except those portions as permitted, (5) posting on network servers or distribution by electronic mail or from electronic storage devices, and (6) translation to other languages or conversion to other electronic formats;
i) other use of the PDF file and printed copy requires express, prior written consent.

## Data Dictionary and MIB Distribution Permission

To the extent that these materials are distributed by AASHTO / ITE / NEMA in the form of a Data Dictionary (“DD”) or Management Information Base (“MIB”), AASHTO / ITE / NEMA extend the following permission:

You may make or distribute unlimited copies, including derivative works, of the DD or MIB, including copies for commercial distribution, provided that:

a) each copy you make or distribute includes the citation “Derived from NTCIP 0000 [insert the standard number]. Copyright by AASHTO / ITE / NEMA. Used by permission.”;

b) the copies or derivative works are not made part of the standard publications or works offered by other standard developing organizations or publishers or as works-for-hire not associated with commercial hardware or software products intended for field implementation;
c) use of the DD or MIB is restricted in that the SYNTAX fields may only be modified to define: 1) a more restrictive subrange; or 2) a subset of the standard enumerated values; or 3) a set of retired and defined enumerated values for systems supporting multiversion interoperability;
d) the description field may be modified but only to the extent that: 1) the more restrictive subrange is defined; and 2) only those bit values or enumerated values that are supported are listed. [from 8002 A2 v04]

These materials are delivered “AS IS” without any warranties as to their use or performance.

**AASHTO / ITE / NEMA and their suppliers do not warrant the performance or results you may obtain by using these materials. AASHTO / ITE / NEMA and their suppliers make no warranties, express or implied, as to noninfringement of third party rights, merchantability, or fitness for any particular purpose. In no event will AASHTO / ITE / NEMA or their suppliers be liable to you or any third party for any claim or for any consequential, incidental or special damages, including any lost profits or lost savings, arising from your reproduction or use of these materials, even if an AASHTO / ITE / NEMA representative has been advised of the possibility of such damages.**

Some states or jurisdictions do not allow the exclusion or limitation of incidental, consequential, or special damages, or the exclusion of implied warranties, so the above limitations may not apply to a given user.

Use of these materials does not constitute an endorsement or affiliation by or between AASHTO, ITE, or NEMA and the user, the user's company, or the products and services of the user's company.

If the user is unwilling to accept the foregoing restrictions, he or she should immediately return these materials.

**PRL and RTM Distribution Permission**

To the extent that these materials are distributed by AASHTO / ITE / NEMA in the form of a Protocol Requirements List (“PRL”) or a Requirements Traceability Matrix (“RTM”), AASHTO / ITE / NEMA extend the following permission:

a) you may make or distribute unlimited copies, including derivative works of the PRL (then known as a Profile Implementation Conformance Statement (“PICS”)) or the RTM, provided that each copy you make or distribute contains the citation “Based on NTCIP 0000 [insert the standard number] PRL or RTM. Used by permission. Original text © AASHTO / ITE / NEMA.”;
b) you may only modify the PRL or the RTM by adding: 1) text in the Project Requirements column, which is the only column that may be modified to show a product's implementation or the project-specific requirements; and/or 2) additional table columns or table rows that are clearly labeled as ADDITIONAL for project-unique or vendor-unique features; and
c) if the PRL or RTM excerpt is made from an unapproved draft, add to the citation “PRL (or RTM) excerpted from a draft standard containing preliminary information that is subject to change.”

This limited permission does not include reuse in works offered by other standards developing organizations or publishers, and does not include reuse in works-for-hire, compendiums, or electronic storage devices that are not associated with procurement documents, or commercial hardware, or commercial software products intended for field installation.

A PRL is completed to indicate the features that are supported in an implementation. Visit www.ntcip.org for information on electronic copies of the MIBs, PRLs, and RTMs.

**TRF Distribution Permission**

A Testing Requirements Form ("TRF") may be a Testing Requirements Traceability Table and/or Test Procedures. To the extent that these materials are distributed by AASHTO / ITE / NEMA in the form of a TRF, AASHTO / ITE / NEMA extend the following permission:

a) you may make and/or distribute unlimited electronic or hard copies, including derivative works of the TRF, provided that each copy you make and/or distribute contains the citation "Based on NTCIP 0000 [insert the standard number] TRF. Used by permission. Original text © AASHTO / ITE / NEMA.";
b) you may not modify the logical flow of any test procedure, without clearly noting and marking any such modification; and
c) if the TRF excerpt is made from an unapproved draft, add to the citation "TRF excerpted from a draft standard containing preliminary information that is subject to change."

**Content and Liability Disclaimer**

The information in this publication was considered technically sound by the consensus of persons engaged in the development and approval of the document at the time it was developed. Consensus does not necessarily mean that there is unanimous agreement among every person participating in the development of this document.

AASHTO, ITE, and NEMA standards and guideline publications, of which the document contained herein is one, are developed through a voluntary consensus standards development process. This process brings together volunteers and seeks out the views of persons who have an interest in the topic covered by this publication. While AASHTO, ITE, and NEMA administer the process and establish rules to promote fairness in the development of consensus, they do not write the document and they do not independently test, evaluate, or verify the accuracy or completeness of any information or the soundness of any judgments contained in their standards and guideline publications.

AASHTO, ITE, and NEMA disclaim liability for any personal injury, property, or other damages of any nature whatsoever, whether special, indirect, consequential, or compensatory, directly or indirectly resulting from the publication, use of, application, or reliance on this document. AASHTO, ITE, and NEMA disclaim and make no guaranty or warranty, express or implied, as to the accuracy or completeness of any information published herein, and disclaims and makes no warranty that the information in this document will fulfill any of your particular purposes or needs. AASHTO, ITE, and NEMA do not undertake to guarantee the performance of any individual manufacturer or seller's products or services by virtue of this standard or guide.

In publishing and making this document available, AASHTO, ITE, and NEMA are not undertaking to render professional or other services for or on behalf of any person or entity, nor are AASHTO, ITE, and NEMA undertaking to perform any duty owed by any person or entity to someone else. Anyone using this document should rely on his or her own independent judgment or, as appropriate, seek the advice of a competent professional in determining the exercise of reasonable care in any given circumstances. Information and other standards on the topic covered by this publication may be available from other sources, which the user may wish to consult for additional views or information not covered by this publication.

AASHTO, ITE, and NEMA have no power, nor do they undertake to police or enforce compliance with the contents of this document. AASHTO, ITE, and NEMA do not certify, test, or inspect products, designs, or installations for safety or health purposes. Any certification or other statement of compliance with any health or safety-related information in this document shall not be attributable to AASHTO, ITE, or NEMA and is solely the responsibility of the certifier or maker of the statement.

**Trademark Notice**

NTCIP is a trademark of AASHTO / ITE / NEMA. All other marks mentioned in this standard are the trademarks of their respective owners.

<This page is intentionally left blank.>

## Acknowledgments

NTCIP 1202 v03 was prepared by the NTCIP Actuated Signal Controller Working Group (ASC WG), which is a subdivision of the Joint Committee on the NTCIP. The NTCIP Joint Committee is organized under a Memorandum of Understanding among the American Association of State Highway and Transportation Officials (AASHTO), the Institute of Transportation Engineers (ITE), and the National Electrical Manufacturers Association (NEMA). The NTCIP Joint Committee consists of six representatives from each of the standards organizations, and provides guidance for NTCIP development.

When NTCIP 1202 v03 was prepared, the following individuals were voting (indicated by an asterisk) or alternate voting members of the NTCIP ASC WG:

- City of Anaheim, John Thai* (Co-Chair)
- California Department of Transportation, Mike Robinson*, Jay Schultz
- Econolite Control Products, Inc., Dustin DeVoe*, Dan Brandesky
- Florida Department of Transportation, Matthew DeWitt*, Jeffrey Morgan, Derek Vollmer
- Minnesota Department of Transportation, Ray Starr*, Terry Haukom, Peter Skewers
- Nissan Motor Co., Roy Goudy*
- Oregon Department of Transportation, Christopher Primm*, Roger Boettcher, Doug Spencer
- Pillar Consulting, Ralph Boaz*
- Q-Free, Doug Tarico* (Co-Chair), Douglas Crawford
- Texas A&M University (TTI), Kevin Balke*, Hassan Charara, Srinivasa Sunkari
- TransCore ITS, Robert Rausch*, David Benevelli, Keith Patton
- Yunex Traffic, Jonathan Grant*, Dave Miller, Iouri Nemirovski

Observing members include:

- Applied Information, Inc., Bryan Mulligan, Walt Townsend
- Consensus Systems Technologies, Patrick Chan, AJ Lahiri
- Eberle Design, Inc., Scott Evans
- Econolite, Gary Duncan, Barry Einsig, Eric Raamot
- McCain Inc., Donald Maas Jr., Matt Zinn, Mark Simpson
- Southwest Research Institute, Cameron Mott

Additional stakeholders who provided input or monitored development include:

- Adaptive Solutions, James Kinnard
- Arcadis U.S., Inc., David Ritchie
- Battelle, Jeffrey Arch, Greg Zink
- Caliper Corporation, Wuping Xin
- CAMP, Jay Parikh
- City of Rosevell, Mojtaba Mohammadi
- Cubic, Shaun Alford, Jeff Cornelius
- Danlaw, Mostafa Kassem
- DENSO, Bryan Wells
- Diablo Controls, Inc., Allen Jacobs
- DKS & Associates, Alan Clelland
- Georgia Department of Transportation, Alan Davis
- Gewalt-Hamilton Associates, Milan Patel
- Global Traffic Technologies, LLC, Christian Kulus
- GreenFactor, Canny Quach
- Gridaptive, Jim Frazer
- HNTB, Stephen Novosad
- Intsignia, Craig Hinners
- Iteris, Tom Lusco
- Jacobs Engineering, Diederick VanDillen
- Kapsch, Joerg “Nu” Rosenbohm
- Kimley-Horn, Bob Barkley
- Maricopa County Department of Transportation, April Wire, Jarod Carrell
- Michigan Department of Transportation, Bashir Choudry
- Mid-America Regional Council, Ray Webb
- Miovision, Jan Bergstrom, Dave Hillis, Greg Barlow, Brian Hoeft
- Mixon Hill, Lee Mixon, Christpher Poe

© 2023 AASHTO / ITE / NEMA Do Not Copy Without Written Permission

- New Jersey DOT, Jeevanjot Singh
- New York City DOT, Rami Khashashina, Mohamad Talas
- Noblis, Justin Anderson
- North Carolina DOT, Greg Fuller
- OmniAir, Randy Roebuck
- Oriux, Ray Deer, Brian Bojorquez, Joe Socci
- Overland Park, KS, Shawn Gotfredson
- Oz Engineering, Tomas Guerra
- Panasonic, Michael Stelts
- Parsons, Jon Wyatt, Dmitri Khijniak
- PR Olson Associates, Paul Olson
- SAE International, Keith Wilson
- SANDAG, Peter Thompson
- SCA Transportation, Soan Chau
- SCSC, David Kelley
- Seattle DOT, Michael Mullen
- Trevilon Corp., Kenneth Vaughn
- Triunity Engineering, Israel Lopez
- The University of Arizona, Larry Head
- UTA, Taylor Li
- Utah Department of Transportation, Chuck Felice, Shane Johnson, Matt Luker
- WSP, Christopher Toth, Thomas Timcho, Erica Toussant, Nora Wisor, Anthony Gasiorowski, Eric Gionet

Beth Ellen Dibeler, Richard Downs, Meredith Emory, Christopher Flores, Leslie Hart, Chris Mysz, Ali Sohi, Gabriel Szyrnski, Mike Wasielewski, Andy Zhang

In addition to the many volunteer efforts, recognition is also given to those organizations that supported the effort by providing funding:

- U.S. Department of Transportation

 © 2023 AASHTO / ITE / NEMA

## Foreword

NTCIP 1202 v03, an NTCIP standards publication, identifies and defines how a management station may wish to interface with a field device to control and monitor traffic signal controllers and associated detectors in an NTCIP-conformant fashion. NTCIP 1202 v03 uses only metric units.

NTCIP 1202 v03 is titled *Object Definitions for Actuated Signal Controllers (ASC) Interface* to express the multiple sections and annexes that are included in NTCIP 1202 v03. This NTCIP 1200-series standards publication has grown beyond the “object definitions” that were reflected in the title for its predecessors, NTCIP 1202 versions v01 and v02 (2005).

NTCIP 1202 v03 defines data elements for use with Actuated Signal Controller Units. The data is defined using the Simple Network Management Protocol (SNMP) object-type format as defined in RFC 1212 and the defined NTCIP format defined in NTCIP 8004. This data would typically be exchanged using one of the NTCIP 1103 recognized Application Layers (e.g., SNMP).

NTCIP 1202 v03 follows an established systems engineering approach to support procurement processes. The PRL is designed to allow an agency to indicate what user needs are applicable to a procurement, and to select which requirements are to be implemented in a project-specific implementation. Proper completion of the PRL by the agency results in a specification that is more likely to satisfy the agency's project needs and that is conformant to NTCIP 1202 v03. The RTM defines the interface specifications for those requirements selected, and can be used to develop the test plans and test procedures.

The following keywords apply to this document: AASHTO, ITE, NEMA, NTCIP, ASC, data, data dictionary, object, MIB, PRL and RTM.

NTCIP 1202 v03 includes a number of normative and informative annexes.

NTCIP 1202 v03 is also an NTCIP Data Dictionary standard. Data Dictionary standards provide definitions of data concepts (messages, data frames, and data elements) for use within NTCIP systems; and they are approved by AASHTO, ITE, and NEMA through a ballot process, after a recommendation by the NTCIP Joint Committee. For more information about NTCIP standards, or to acquire the related NTCIP 1202 v03 MIB, visit www.ntcip.org.

### NTCIP 1202 v03A Errata (associated with Flashing Yellow Arrow (FYA))

As NTCIP 1202 v03 was about to be published and distributed, a user provided proposed clarifications/corrections associated with experience in implementing the Flashing Yellow Arrow (FYA) functionality described in Sections 5.9.2.7, 7.2.5.3, 7.2.5.11, and 7.2.7.1. The clarifications/corrections associated with these sections were shown using track changes and later in NTCIP 1202 v03A (without track changes). These clarifications/corrections constitute the FYA errata.

### NTCIP 1202 v03B Amendment

The NTCIP 1202 v03B Amendment was published in 2023 to address an urgent need to fix errors, clarify definitions, and provide additional guidance for traffic signal controllers to support the SAE J2735 SPaT Message in response to guidance detailed in Connected Transportation Interoperability (CTI) 4501, Connected Intersections (CI) Implementation Guide.

In addition, a project led by the City of Anaheim and sponsored by USDOT developed test procedures and test software to verify the NTCIP 1202 v03A standard. This project resulted in the discovery of various ambiguities and errors in NTCIP 1202 v03A.

© 2023 AASHTO / ITE / NEMA Do Not Copy Without Written Permission

1. Deprecated a user need, 2.5.4.2, Connected Vehicle Manager: Management Station – CV Roadside Process Interface, which is now superseded by NTCIP 1218: Object Definitions for Roadside Units. Also deprecated requirements, object definitions, and block objects that trace to this user need.
2. Deprecated support for the CV Roadside Process as an SNMP manager for the interface between the ASC and the CV Roadside Process. Also deprecated requirements that trace to this user need.
3. Added User Need 2.6.5 for Managing Security with Other Interfaces.
4. Added requirements, 3.4.1.4.1 – 3.4.1.4.5 SNMP Requirements to support the SNMP Conformance Group in NTCIP 1202 v02, which is a mandatory conformance group.
5. Added requirements, H.1.1.11 Configure System Contact Information and H.1.1.12, Monitor Other System Information to support the System Conformance Group in NTCIP 1202 v02, which is a mandatory conformance group.
6. Corrected errors with RTM for use of the overlapType object.
7. Updated requirements and design content to support the requirements in CTI 4501.
8. Updated the Protocol Requirements List to be consistent with CTI 4501.
9. Added requirements 3.5.4.1.3.6.2.13 and 3.5.4.3.1.1.3.19 for Start Time.
10. Added allRedControllerFlash (3) for 5.4.18, unitStartUpFlashMode.
11. Updated object definitions based on 2022 version of SAE J2735.
12. Added the Object Types for each object definition in MIB (see Section 4.5).
13. Corrected errors in standard block objects 6.23 – AscVehDetVolOccV3Block, 6.25 – AscPedDetectorReportBlock, 6.34 – AscEthernetCommPortDefBlock, 6.36 – AscMisc2Block, and 6.38 – AscLocationBlockData. The sequences in these block objects included object definitions that were read-only, were control ('C') objects, and/or were proposed object definitions that were removed.
14. Corrected errors in standard block objects 6.21 – Phase 2 Block Data, 6.43 – AscIOinputMapBlock, 6.44 – AscIOinputStatusBlock, 6.45 – AscIOoutputMapBlock, 6.46 – AscIOoutputStatusBlock, and 6.47 – AscIOMapDescriptionBlock. Errors included extra instances of data sequences, incorrect spelling, and missing instances.
15. Added two new standard block objects.

**User Comment Instructions**

The term “User Comment” includes any type of written inquiry, comment, question, or proposed revision, from an individual person or organization, about any NTCIP 1202 v03 content. A “Request for Interpretation” is also classified as a User Comment. User Comments are solicited at any time. In preparation of this NTCIP standards publication, input of users and other interested parties was sought and evaluated.

User Comments are generally referred to the committee responsible for developing and/or maintaining NTCIP 1202 v03. The committee chairperson, or their designee, may contact the submitter for clarification of the User Comment. When the committee chairperson or designee reports the committee's consensus opinion related to the User Comment, that opinion is forwarded to the submitter. The committee chairperson may report that action on the User Comment may be deferred to a future committee meeting and/or a future revision of the standards publication. Previous User Comments and their disposition may be available for reference and information at www.ntcip.org.

A User Comment should be submitted to this address:

NTCIP Coordinator
National Electrical Manufacturers Association
1300 North 17th Street, Suite 900
Rosslyn, Virginia 22209-3801
email: ntcip@nema.org

Do Not Copy Without Written Permission © 2023 AASHTO / ITE / NEMA

A User Comment should be submitted in the following form:

Standard Publication number and version:
Page:
Section, Paragraph, or Clause:
Comment:
Editorial or Substantive?:
Suggested Alternative Language:

Please include your name, organization, and address in your correspondence.

**Approvals**

NTCIP 1202 v03 was separately balloted and approved by AASHTO, ITE, and NEMA after recommendation by the Joint Committee on the NTCIP. Each organization has approved NTCIP 1202 v03 as the following standard type, as of the date:

AASHTO—Standard Specification; December 2018
ITE—Software Standard; January 2019
NEMA—Standard; December 2018

**History**

In 1992, the NEMA 3TS Transportation Management Systems and Associated Control Devices Section began the effort to develop NTCIP. Under the guidance of the Federal Highway Administration's NTCIP Steering Group, the NEMA effort was expanded to include the development of communications standards for all transportation field devices that could be used in an ITS network.

In September 1996, an agreement was executed among AASHTO, ITE, and NEMA to jointly develop, approve, and maintain the NTCIP standards. In late 1998, the Actuated Signal Controller Working Group was tasked with the effort to update the Actuated Traffic Signal Controller Object Definitions document. The first meeting of this working group was held in October 1999. From 1996 to 1999, this document was referenced as NEMA TS 3.5-1996. However, to provide an organized numbering scheme for the NTCIP documents, this document is now referenced as NTCIP 1202. As included in the following development history, NTCIP 1202 has experienced revisions over time:

NEMA TS 3.5-1996. 1996 – Approved by NEMA. 1996 – Accepted as a Recommended Standard by the Joint Committee on the NTCIP. 1997 – Approved by AASHTO and ITE.
v01.07a printed with NEMA cover.

NTCIP 1202 v01. v01.07b printed with joint cover. v01.07c printed to PDF in November 2002. v01.07d printed to PDF for no-cost distribution January 2005.

NTCIP 1202 Amendment 1. November 1999 – Accepted as a User Comment Draft Amendment by the Joint Committee on the NTCIP. April 2000 – NTCIP Standards Bulletin B0049 sent NTCIP 1202 Amendment 1 v01.06b for user comment. NTCIP 1202 Amendment 1, a User Comment Draft, was incorporated into 1202 v02, and was not advanced further.

NTCIP 1202 v02.10. June 2001 – Accepted as a User Comment Draft by the Joint Committee on the NTCIP. February 2002 – NTCIP Standards Bulletin B0068 referred v02.13 for user review and comment.

NTCIP 1202 v02.16. October 2002 – Accepted as a Recommended Standard by the Joint Committee on the NTCIP. April 2004 – NTCIP Standards Bulletin B0091 referred v02.18 for

© 2023 AASHTO / ITE / NEMA Do Not Copy Without Written Permission

balloting. Approved by AASHTO in November 2004, approved by ITE in March 2005, and approved by NEMA in November 2004.

NTCIP 1202:2005 v02.19. November 2005 – Edited document for publication. By the terms of MOU on CTPA article 1.2, the ownership of version 02 was assigned to AASHTO, ITE, and NEMA because the preexisting work was revised by more than 50%.

NTCIP 1202 v03 was developed to reflect lessons learned, to update the document to the new documentation formats, and to add new features such as support for a connected vehicle interface. NTCIP 1202 v03 also follows an established systems engineering approach. Several new sections were added to relate user needs identified in a concept of operations, functional requirements, interface specifications, and a requirements traceability matrix to the existing sections.

As NTCIP 1202 v03 was about to be published and distributed, a user provided proposed clarifications/corrections associated with experience in implementing the Flashing Yellow Arrow (FYA) functionality. The clarifications/corrections constitute the FYA errata, and were published as NTCIP 1202 v03A in May 2019.

The NTCIP 1202 v03B Amendment was published in 2023 to address an urgent need to fix errors, clarify definitions, and provide additional guidance for traffic signal controllers to support the SAE J2735 SPaT Message in response to guidance detailed in Connected Transportation Interoperability (CTI) 4501, Connected Intersections (CI) Implementation Guide.

**Compatibility of Versions**

To distinguish NTCIP 1202 v03B (as published) from previous drafts, NTCIP 1202 v03B also includes NTCIP 1202 v03B.35 on each page header. All NTCIP Standards Publications have a major and minor version number for configuration management. The version number SYNTAX is "v00.00a," with the major version number before the period, and the minor version number and edition letter (if any) after the period.

Note: NTCIP 1202 v03B differs from NTCIP 1202 v03A in that NTCIP 1202 v03B corrects errors, clarifies definitions, and updates the user needs, requirements, and design content in response to guidance detailed in Connected Transportation Interoperability (CTI) 4501, Connected Intersections (CI) Implementation Guide.

The MIB associated with NTCIP 1202 v03B (as published) is 1202 v0335.MIB and 1217 v0135.MIB.

NTCIP 1202 v03B is designated, and should be cited as, NTCIP 1202 v03B. Anyone using NTCIP 1202 v03 should seek information about the version number that is of interest to them in any given circumstance. The PRL, RTM, and MIB should all reference the version number of the standards publication that was the source of the excerpted material.

Note: TPG users should enter Standard Number 1202, Major Version Number 03, Minor Version Number 35, and browse for the TPG-enabled version of NTCIP 1202 v03B.

Compliant systems based on later, or higher, version numbers MAY NOT be compatible with compliant systems based on earlier, or lower, version numbers. Anyone using NTCIP 1202 v03B should also consult NTCIP 8004 v02 for specific guidelines on compatibility.

Note: NTCIP 1202 v03B retains references to NTCIP 1202 v03 in text (self-references).

Do Not Copy Without Written Permission © 2023 AASHTO / ITE / NEMA

**TABLE OF CONTENTS**

**Section 1 General [Informative] ..... 1**
1.1 Scope ..... 1
1.2 References ..... 2
1.2.1 Normative References ..... 2
1.2.2 Other References ..... 2
1.2.3 Contact Information ..... 3
1.2.3.1 Internet Documents ..... 3
1.2.3.2 Architecture Reference for Cooperative and Intelligent Transportation ..... 4
1.2.3.3 NTCIP Standards ..... 4
1.2.3.4 Object Management Group Documents ..... 4
1.2.3.5 SAE International Documents ..... 4
1.2.3.6 ATC Standards ..... 4
1.2.3.7 Caltrans Standards ..... 4
1.2.3.8 V2I Hub Document ..... 4
1.3 General Statements ..... 5
1.4 Terms ..... 5
1.5 Abbreviations ..... 14
**Section 2 Concept of Operations [Normative] ..... 15**
2.1 Tutorial [Informative] ..... 15
2.2 Current Situation and Problem Statement [Informative] ..... 16
2.3 Reference Physical Architecture [Informative] ..... 17
2.3.1 ASC Characteristics—Cabinet Specifications ..... 19
2.3.2 ASC Characteristics—Controller Types ..... 20
2.3.3 ASC Characteristics—Connected Vehicle Interface ..... 21
2.4 Architectural Needs ..... 23
2.4.1 Provide Live Data ..... 23
2.4.2 Provide Dynamic Object Data ..... 23
2.4.3 Provide Block Data ..... 24
2.4.4 Provide for Log Data Local Storage and Retrieval ..... 24
2.4.5 Provide for Database Management ..... 24
2.4.6 Condition-Based Exception Reporting ..... 24
2.5 Features ..... 24
2.5.1 Manage the ASC Configuration ..... 24
2.5.1.1 Retrieve Device Identity ..... 25
2.5.1.2 Manage Communications ..... 25
2.5.1.3 Manage Cabinet Environment ..... 25
2.5.1.4 Monitor Power ..... 25
2.5.1.5 Retrieve Operational Performance Data ..... 25
2.5.1.6 Manage Auxiliary External Inputs/Outputs ..... 25
2.5.1.7 Manage Database ..... 26
2.5.2 Manage Signal Operations ..... 26
2.5.2.1 Manage Signal Configuration ..... 26
2.5.2.1.1 Manage Controller Startup Functions ..... 26
2.5.2.1.2 Manage Phase Configurations ..... 26
2.5.2.1.3 Manage Coordination Configurations ..... 26
2.5.2.1.4 Manage Timing Patterns ..... 26
2.5.2.1.5 Manage Splits Configurations ..... 26
2.5.2.1.6 Manage Ring Configurations ..... 26
2.5.2.1.7 Manage Channel Configurations ..... 27
2.5.2.1.8 Manage Overlap Configurations ..... 27

© 2023 AASHTO / ITE / NEMA Do Not Copy Without Written Permission

2.5.2.1.9 Manage Preempt Configurations ..... 27
2.5.2.1.10 Manage Timing Pattern Scheduler ..... 27
2.5.2.1.11 Manage Action Scheduler ..... 27
2.5.2.1.12 Manage I/O Mapping ..... 27
2.5.2.1.13 Manage Intra-Cabinet Communications Configuration ..... 27
2.5.2.1.14 Manage ADA Support ..... 28
2.5.2.2 Monitor Signal Operations Status ..... 28
2.5.2.2.1 Determine Controller Health ..... 28
2.5.2.2.2 Determine Mode of Operation ..... 28
2.5.2.2.2.1 Monitor Unit-Wide General Operations ..... 28
2.5.2.2.2.2 Monitor Flashing ..... 28
2.5.2.2.2.3 Monitor Current Timing Pattern ..... 28
2.5.2.2.2.4 Monitor Current Cycle ..... 29
2.5.2.2.3 Monitor Signal Indication ..... 29
2.5.2.2.4 Monitor Phase Status ..... 29
2.5.2.2.5 Monitor Ring Status ..... 29
2.5.2.2.6 Monitor Channel Status ..... 29
2.5.2.2.7 Monitor Overlap Status ..... 29
2.5.2.2.8 Monitor Preempt Input State ..... 29
2.5.2.2.9 Monitor Preempt State ..... 29
2.5.2.2.10 Monitor Special Function Outputs ..... 30
2.5.2.2.11 Monitor Timebase Action Status ..... 30
2.5.2.2.12 Monitor Intra-Cabinet Communications Configuration ..... 30
2.5.2.3 Control Signal Operations ..... 30
2.5.2.3.1 Control ASC-Wide General Operations ..... 30
2.5.2.3.2 Command Timing Pattern ..... 30
2.5.2.3.3 Phase Requests ..... 30
2.5.2.3.4 Activate Preempt ..... 30
2.5.2.3.5 Control Ring Operations ..... 31
2.5.2.3.6 Activate Special Function Output ..... 31
2.5.2.3.7 Control Frame 40 ..... 31
2.5.2.3.8 Activate Action Plan ..... 31
2.5.2.3.9 Remote Manual Control ..... 31
2.5.3 Manage Detectors ..... 31
2.5.3.1 Manage Detector Configuration ..... 31
2.5.3.2 Monitor Detector Status ..... 31
2.5.3.3 Monitor Detector Health ..... 32
2.5.3.4 Control Detectors ..... 32
2.5.3.5 Manage Detector Data ..... 32
2.5.4 Manage Connected Vehicles Interface ..... 32
2.5.4.1 Connected Vehicle Manager: Management Station–ASC Interface ..... 32
2.5.4.1.1 Manage RSU Interface ..... 33
2.5.4.1.2 Manage RSU Interface Watchdog ..... 33
2.5.4.1.3 Manage Signal Phase and Timing Data ..... 33
2.5.4.1.4 Exchange Connected Devices Data for Operational Performance Data ..... 33
2.5.4.2 Connected Vehicle Manager: Management Station – CV Roadside Process Interface [Deprecated] ..... 33
2.5.4.2.1 Manage Roadway Geometrics Information [Deprecated] ..... 33
2.5.4.2.2 Manage Movement Configuration for Connected Devices [Deprecated] ..... 34
2.5.4.2.3 Manage Collection of Connected Devices Data [Deprecated] ..... 34
2.5.4.2.4 Monitor Broadcasted MAP Messages [Deprecated] ..... 34
2.5.4.2.5 Monitor Broadcasted SPaT Messages [Deprecated] ..... 34
2.5.4.3 Connected Vehicle Manager: ASC – CV Roadside Process Interface ..... 34
2.5.4.3.1 Exchange Current and Next Movement Information ..... 35
2.5.4.3.2 Exchange Next Occurrence of a Movement ..... 35
2.5.4.3.3 Exchange Presence of Connected Devices ..... 35

 © 2023 AASHTO / ITE / NEMA

2.5.4.3.4 Exchange Roadway Geometrics Information ..... 35
2.5.4.3.5 Exchange Movement Configuration ..... 35
2.5.5 Backward Compatibility Features ..... 36
2.5.5.1 Backward Compatible with NTCIP 1202 v01 ..... 36
2.5.5.2 Backward Compatible with NTCIP 1202 v02 ..... 36
2.5.5.3 Backward Compatible with NTCIP 1202 v03A ..... 36
2.6 Security ..... 36
2.6.1 Manage Authentication ..... 36
2.6.2 Manage Accessibility ..... 36
2.6.3 Manage Users ..... 36
2.6.4 Log User Access ..... 37
2.6.5 Manage Security Between ASC and Other Interfaces ..... 37
2.7 Operational Policies and Constraints ..... 37
2.8 Relationship to the ITS National Architecture [Informative] ..... 37
**Section 3 Functional Requirements [Normative] ..... 40**
3.1 Tutorial [Informative] ..... 40
3.2 Scope of the Interface [Informative] ..... 41
3.3 Protocol Requirements List (PRL) ..... 41
3.3.1 Notation [Informative] ..... 41
3.3.1.1 Conformance Symbols ..... 41
3.3.1.2 Conditional Status Notation ..... 42
3.3.1.3 Support Column Symbols ..... 43
3.3.2 Instructions for Completing the PRL [Informative] ..... 43
3.3.2.1 Conformance Definition ..... 43
3.3.3 Protocol Requirements List (PRL) Table ..... 44
3.4 Architectural Requirements ..... 95
3.4.1 Support Basic Communications Requirements ..... 95
3.4.1.1 Retrieve Data ..... 95
3.4.1.2 Deliver Data ..... 95
3.4.1.3 Explore Data ..... 95
3.4.1.4 SNMP Requirements ..... 95
3.4.1.4.1 Monitor SNMP Information ..... 95
3.4.1.4.2 Monitor Successful SNMP GET Requests ..... 95
3.4.1.4.3 Monitor Valid SNMP SET Requests ..... 95
3.4.1.4.4 Monitor SNMP Traps ..... 95
3.4.1.4.5 Enable Authentication Traps ..... 95
3.4.2 Support Logged Data Requirements ..... 96
3.4.3 Support Exception Reporting Requirements ..... 96
3.4.4 Manage Access Requirements ..... 96
3.4.4.1 Configure Access ..... 96
3.4.4.2 Determine Current Access Settings ..... 96
3.5 Data Exchange and Operational Environment Requirements ..... 96
3.5.1 ASC Configuration Management Requirements ..... 96
3.5.1.1 Manage ASC Location Requirements ..... 96
3.5.1.1.1 Configure ASC Location ..... 96
3.5.1.1.2 Configure ASC Location—Antenna Offset ..... 96
3.5.1.2 Manage Communications Requirements ..... 97
3.5.1.2.1 Configure Communications Requirements ..... 97
3.5.1.2.1.1 Enable/Disable Communications Port ..... 97
3.5.1.2.1.2 Configure ASC Ethernet Ports ..... 97
3.5.1.2.1.3 Configure ASC Asynchronous Serial Ports ..... 97
3.5.1.2.1.4 Configure ASC Synchronous Serial Ports ..... 97
3.5.1.2.1.5 Configure ASC Communications Protocol—Serial Ports ..... 97

© 2023 AASHTO / ITE / NEMA Do Not Copy Without Written Permission

3.5.1.2.2 Retrieve Communications Requirements ..... 97
3.5.1.2.2.1 Determine Number of ASC Communications Ports ..... 98
3.5.1.2.3 Monitor Communications Requirements ..... 98
3.5.1.2.3.1 Monitor Response Timeout—Ethernet ..... 98
3.5.1.2.3.2 Monitor Response Timeout—Serial ..... 98
3.5.1.2.3.3 Monitor Data Link Errors—Ethernet ..... 98
3.5.1.2.3.4 Monitor Data Link Errors—Serial ..... 98
3.5.1.2.3.5 Monitor Polling Timeout—Port 1 ..... 98
3.5.1.2.3.6 Monitor Polling Timeout—Serial Bus ..... 98
3.5.1.2.4 Perform Communications Diagnostics Requirements ..... 98
3.5.1.2.4.1 Set Communications Port to Loopback Mode ..... 98
3.5.1.2.4.2 Set Communications Port to Echo Mode ..... 99
3.5.1.3 Retrieve Cabinet Environment Requirements ..... 99
3.5.1.3.1 Monitor Cabinet Door Status ..... 99
3.5.1.3.2 Monitor Cabinet Fan Status ..... 99
3.5.1.3.3 Monitor Cabinet Heater Status ..... 99
3.5.1.3.4 Monitor Cabinet Float Switch Status ..... 99
3.5.1.3.5 Monitor ASC Temperature ..... 99
3.5.1.3.6 Monitor ASC Humidity ..... 99
3.5.1.3.7 Configure ASC Temperature Threshold ..... 99
3.5.1.3.8 Configure ASC Humidity Thresholds ..... 99
3.5.1.3.9 Configure ATC Cabinet Device LEDs ..... 100
3.5.1.4 Monitor Power Requirements ..... 100
3.5.1.4.1 Determine Power Source ..... 100
3.5.1.4.2 Monitor AC Power Status ..... 100
3.5.1.4.3 Monitor UPS Battery Charge ..... 100
3.5.1.4.4 Monitor UPS Battery Voltage ..... 100
3.5.1.4.5 Monitor UPS Battery Current ..... 100
3.5.1.5 Manage Operational Performance Data Requirements ..... 100
3.5.1.5.1 Configure Operational Performance Data Requirements ..... 100
3.5.1.5.1.1 Enable/Disable Collection of Operational Performance Data ..... 100
3.5.1.5.1.2 Start Collection of Operational Performance Data on Specific Date/Time ..... 101
3.5.1.5.1.3 End Collection of Operational Performance Data on Specific Date/Time ..... 101
3.5.1.5.1.4 Configure Collection of Operational Performance Data ..... 101
3.5.1.5.2 Retrieve Operational Performance Data Configuration Requirements ..... 101
3.5.1.5.2.1 Determine Collection of Operational Performance Data ..... 101
3.5.1.5.2.2 Determine Operational Performance Data Collection Capabilities ..... 101
3.5.1.5.3 Retrieve Operational Performance Data Requirements ..... 101
3.5.1.5.3.1 Monitor Operational Performance Data ..... 101
3.5.1.5.3.2 Retrieve Operational Performance Data ..... 101
3.5.1.5.3.3 Retrieve Operational Performance Data—Time Range ..... 101
3.5.1.5.3.4 Retrieve Operational Performance Data—Event Code ..... 102
3.5.1.5.4 Clear Operational Performance Data Requirements ..... 102
3.5.1.5.4.1 Clear Operational Performance Data—All ..... 102
3.5.1.5.4.2 Clear Operational Performance Data—Time Range ..... 102
3.5.1.5.4.3 Clear Operational Performance Data—Event Code ..... 102
3.5.1.5.4.4 Clear Operational Performance Data—Event Class ..... 102
3.5.1.5.4.5 Clear Operational Performance Data—Configuration ..... 102
3.5.1.6 Manage ASC Clock Requirements ..... 102
3.5.1.6.1 Configure ASC Clock Source ..... 102
3.5.1.6.2 Determine ASC Clock Status ..... 102
3.5.1.6.3 Determine Current ASC Clock Source ..... 102
3.5.1.6.4 Determine Available ASC Clock Sources ..... 102
3.5.2 Manage Signal Operations Management Requirements ..... 103
3.5.2.1 Manage Signal Configuration Requirements ..... 103
3.5.2.1.1 Manage Unit Configuration Requirements ..... 103

 © 2023 AASHTO / ITE / NEMA

3.5.2.1.1.1 Manage Startup Requirements ..... 103
3.5.2.1.1.1.1 Configure Startup All-Red Flash Mode ..... 103
3.5.2.1.1.1.2 Configure Startup Flash Time ..... 103
3.5.2.1.1.1.3 Enable/Disable Automatic Pedestrian Clearance Setting ..... 103
3.5.2.1.1.2 Configure Backup Time ..... 103
3.5.2.1.1.3 Configure Backup Time—User-Defined ..... 104
3.5.2.1.1.4 Configure Backup Time—User-Defined Functions ..... 104
3.5.2.1.1.5 Determine Maximum Number of Functions Supported for Backup Time ..... 104
3.5.2.1.1.6 Configure Parameters for Creation of an Alternate Device Configuration Identifier ..... 104
3.5.2.1.2 Manage Phase Configuration Requirements ..... 104
3.5.2.1.2.1 Configure Phases Requirements ..... 104
3.5.2.1.2.1.1 Enable/Disable Phase ..... 104
3.5.2.1.2.1.2 Configure Vehicle Phase Minimum Green Time ..... 104
3.5.2.1.2.1.3 Configure Vehicle Phase Passage Time ..... 104
3.5.2.1.2.1.4 Configure Vehicle Phase Maximum Green Times ..... 104
3.5.2.1.2.1.5 Configure Vehicle Phase Third Maximum Green Times ..... 105
3.5.2.1.2.1.6 Configure Phase Yellow Time ..... 105
3.5.2.1.2.1.7 Configure Red Clearance Time ..... 105
3.5.2.1.2.1.8 Configure Phase Red Revert Time ..... 105
3.5.2.1.2.1.9 Configure Unit Red Revert Time ..... 105
3.5.2.1.2.1.10 Configure Added Initial Time ..... 105
3.5.2.1.2.1.11 Configure Maximum Initial Time ..... 105
3.5.2.1.2.1.12 Configure Time Before Reduction ..... 105
3.5.2.1.2.1.13 Configure Phase Time to Reduce ..... 106
3.5.2.1.2.1.14 Configure Cars Before Reduction ..... 106
3.5.2.1.2.1.15 Configure Phase Reduce By Time ..... 106
3.5.2.1.2.1.16 Configure Phase Minimum Gap Time ..... 106
3.5.2.1.2.1.17 Configure Phase Dynamic Maximum Limit ..... 106
3.5.2.1.2.1.18 Configure Phase Dynamic Maximum Step ..... 106
3.5.2.1.2.1.19 Configure Phase Startup Requirements ..... 106
3.5.2.1.2.1.20 Configure Automatic Flash Entry Phase ..... 107
3.5.2.1.2.1.21 Configure Automatic Flash Exit Phase ..... 107
3.5.2.1.2.1.22 Configure Call to Non-Actuated 1 ..... 107
3.5.2.1.2.1.23 Configure Call to Non-Actuated 2 ..... 107
3.5.2.1.2.1.24 Configure Non-Lock Detector Memory ..... 107
3.5.2.1.2.1.25 Configure Minimum Vehicle Recall ..... 108
3.5.2.1.2.1.26 Configure Maximum Vehicle Recall ..... 108
3.5.2.1.2.1.27 Configure Soft Vehicle Recall ..... 108
3.5.2.1.2.1.28 Configure Dual Phase Entry ..... 108
3.5.2.1.2.1.29 Configure Simultaneous Gap Disable ..... 108
3.5.2.1.2.1.30 Configure Guaranteed Passage ..... 108
3.5.2.1.2.1.31 Configure Actuated Rest-in-Walk ..... 108
3.5.2.1.2.1.32 Configure Conditional Service Enable ..... 108
3.5.2.1.2.1.33 Configure Added Initial Calculation ..... 108
3.5.2.1.2.1.34 Configure Phase-to-Ring Association ..... 108
3.5.2.1.2.1.35 Configure Phase Concurrency ..... 109
3.5.2.1.2.1.36 Configure Yellow Change Time Before End of Ped Clearance ..... 109
3.5.2.1.2.1.37 Enable/Disable Ped-Only Phase ..... 109
3.5.2.1.2.1.38 Configure Pedestrian Green Time ..... 109
3.5.2.1.2.1.39 Configure Pedestrian Clearance Time ..... 109
3.5.2.1.2.1.40 Configure Ped Phase Walk Recycle Time ..... 109
3.5.2.1.2.1.41 Configure Ped Phase Don't Walk Revert Time ..... 109
3.5.2.1.2.1.42 Configure Non-Lock Ped Detector Memory ..... 109
3.5.2.1.2.1.43 Configure Pedestrian Recall ..... 109
3.5.2.1.2.1.44 Configure Alternate Pedestrian Clearance Time ..... 110

© 2023 AASHTO / ITE / NEMA Do Not Copy Without Written Permission

3.5.2.1.2.1.45 Configure Alternate Pedestrian Walk Time ..... 110
3.5.2.1.2.1.46 Configure Vehicle Phase Walk Offset Time ..... 110
3.5.2.1.2.1.47 Configure Advanced Green Warning—Associated Vehicle Phase ..... 110
3.5.2.1.2.1.48 Configure Advanced Green Warning—Start Delay Time ..... 110
3.5.2.1.2.1.49 Configure Advanced Red Warning—Associated Vehicle Phase ..... 110
3.5.2.1.2.1.50 Configure Red Indication Advanced Warning—Start Delay Time ..... 110
3.5.2.1.2.1.51 Configure Flashing Yellow Arrow Associated Vehicle Phase ..... 110
3.5.2.1.2.1.52 Configure Flashing Red Arrow Associated Vehicle Phase ..... 110
3.5.2.1.2.1.53 Configure Bicycle Phase Minimum Green Time ..... 110
3.5.2.1.2.1.54 Configure Bicycle Phase Yellow Time ..... 111
3.5.2.1.2.1.55 Configure Bicycle Phase Red Clearance Time ..... 111
3.5.2.1.2.1.56 Configure Bicycle Phase Red Revert Time ..... 111
3.5.2.1.2.1.57 Enable/Disable Bicycle Phase ..... 111
3.5.2.1.2.1.58 Configure Non-Lock Bicycle Detector Memory ..... 111
3.5.2.1.2.1.59 Configure Bicycle Phase Recall ..... 111
3.5.2.1.2.1.60 Configure Soft Bicycle Phase Recall ..... 111
3.5.2.1.2.1.61 Configure Bicycle Phase-to-Ring Association ..... 111
3.5.2.1.2.1.62 Configure Bicycle Phase Concurrency ..... 111
3.5.2.1.2.1.63 Configure Transit Phase Minimum Green Time ..... 111
3.5.2.1.2.1.64 Configure Transit Phase Maximum Green Time ..... 112
3.5.2.1.2.1.65 Configure Transit Phase Third Maximum Green Time ..... 112
3.5.2.1.2.1.66 Configure Transit Phase Yellow Time ..... 112
3.5.2.1.2.1.67 Configure Transit Phase Red Clearance Time ..... 112
3.5.2.1.2.1.68 Configure Transit Phase Red Revert Time ..... 112
3.5.2.1.2.1.69 Configure Transit Phase Added Initial Time ..... 112
3.5.2.1.2.1.70 Configure Transit Phase Maximum Initial Time ..... 112
3.5.2.1.2.1.71 Enable/Disable Transit Phase ..... 112
3.5.2.1.2.1.72 Configure Non-Lock Transit Detector Memory ..... 113
3.5.2.1.2.1.73 Configure Transit Phase Recall ..... 113
3.5.2.1.2.1.74 Configure Soft Transit Phase Recall ..... 113
3.5.2.1.2.1.75 Configure Dual Transit Phase Entry ..... 113
3.5.2.1.2.1.76 Configure Transit Phase-to-Ring Association ..... 113
3.5.2.1.2.1.77 Configure Transit Phase Concurrency ..... 113
3.5.2.1.2.1.78 Enable/Disable Vehicle Phase Omit ..... 113
3.5.2.1.2.1.79 Enable/Disable Vehicle Phase Omit During Transition ..... 113
3.5.2.1.2.1.80 Enable/Disable Ped-Only Phase Omit ..... 113
3.5.2.1.2.1.81 Enable/Disable Ped-Only Phase Omit During Transition ..... 113
3.5.2.1.2.1.82 Enable/Disable Bicycle-Only Phase Omit ..... 114
3.5.2.1.2.1.83 Enable/Disable Bicycle-Only Phase Omit During Transition ..... 114
3.5.2.1.2.1.84 Enable/Disable Transit Phase Omit ..... 114
3.5.2.1.2.1.85 Enable/Disable Transit Phase Omit During Transition ..... 114
3.5.2.1.2.1.86 Configure Alternate Minimum Vehicle Green Time During Transition ..... 114
3.5.2.1.2.1.87 Configure Alternate Minimum Pedestrian Walk Time During Transition ..... 114
3.5.2.1.2.1.88 Configure Alternate Minimum Bicycle Green Time During Transition ..... 114
3.5.2.1.2.1.89 Configure Alternate Minimum Transit Green Time During Transition ..... 114
3.5.2.1.2.1.90 Configure Phase Force Mode for Coordination Requirements ..... 115
3.5.2.1.2.2 Retrieve Phase Configuration Requirements ..... 115
3.5.2.1.2.2.1 Determine Maximum Number of Phases ..... 115
3.5.2.1.3 Manage Coordination Configuration Requirements ..... 115
3.5.2.1.3.1 Configure Operational Mode for Coordination Requirements ..... 115
3.5.2.1.3.1.1 Configure Operational Mode for Coordination—Automatic ..... 115
3.5.2.1.3.1.2 Configure Operational Mode for Coordination—Manual Pattern ..... 115
3.5.2.1.3.1.3 Configure Operational Mode for Coordination—Manual Free ..... 115
3.5.2.1.3.1.4 Configure Operational Mode for Coordination—Manual Flash ..... 116
3.5.2.1.3.2 Configure Correction Mode for Coordination Requirements ..... 116
3.5.2.1.3.2.1 Configure Correction Mode for Coordination—Dwell ..... 116

 © 2023 AASHTO / ITE / NEMA

3.5.2.1.3.2.2 Configure Correction Mode for Coordination—Shortway ..... 116
3.5.2.1.3.2.3 Configure Correction Mode for Coordination—AddOnly ..... 116
3.5.2.1.3.2.4 Configure Correction Mode for Coordination—SubtractOnly ..... 116
3.5.2.1.3.3 Configure Maximum Mode for Coordination Requirements ..... 116
3.5.2.1.3.3.1 Configure Correction Mode for Coordination—Maximum 1 ..... 116
3.5.2.1.3.3.2 Configure Correction Mode for Coordination—Maximum 2 ..... 116
3.5.2.1.3.3.3 Configure Correction Mode for Coordination—Maximum Inhibit ..... 117
3.5.2.1.3.3.4 Configure Correction Mode for Coordination—Maximum 3 ..... 117
3.5.2.1.3.4 Configure Unit-Level Force Mode for Coordination Requirements ..... 117
3.5.2.1.3.4.1 Configure Unit-Level Force Mode for Coordination—Floating ..... 117
3.5.2.1.3.4.2 Configure Unit-Level Force Mode for Coordination—Fixed ..... 117
3.5.2.1.3.5 Configure Unit Coordination Point Requirements ..... 117
3.5.2.1.3.5.1 Configure Unit Coordination Point—First Phase Green Begin ..... 117
3.5.2.1.3.5.2 Configure Unit Coordination Point—Last Phase Green Begin ..... 117
3.5.2.1.3.5.3 Configure Unit Coordination Point—First Phase Green End ..... 117
3.5.2.1.3.5.4 Configure Unit Coordination Point—Last Phase Green End ..... 118
3.5.2.1.3.5.5 Configure Unit Coordination Point—First Phase Yellow End ..... 118
3.5.2.1.3.5.6 Configure Unit Coordination Point—Last Phase Yellow End ..... 118
3.5.2.1.3.6 Configure Coordination Point Requirements ..... 118
3.5.2.1.3.6.1 Configure Coordination Point—First Phase Green Begin ..... 118
3.5.2.1.3.6.2 Configure Coordination Point—Last Phase Green Begin ..... 118
3.5.2.1.3.6.3 Configure Coordination Point—First Phase Green End ..... 118
3.5.2.1.3.6.4 Configure Coordination Point—Last Phase Green End ..... 118
3.5.2.1.3.6.5 Configure Coordination Point—First Phase Yellow End ..... 118
3.5.2.1.3.6.6 Configure Coordination Point—Last Phase Yellow End ..... 118
3.5.2.1.3.6.7 Configure Coordination Point—Unit Coordination Point ..... 118
3.5.2.1.3.7 Configure Omit Phases During Transitions ..... 119
3.5.2.1.3.8 Configure Minimum Green Times During Transitions ..... 119
3.5.2.1.3.9 Configure Minimum Pedestrian Times During Transitions ..... 119
3.5.2.1.3.10 Configure Transit Maximum Mode for Coordination Requirements ..... 119
3.5.2.1.3.10.1 Configure Transit Correction Mode for Coordination—Maximum 1 ..... 119
3.5.2.1.3.10.2 Configure Transit Correction Mode for Coordination—Maximum 2 ..... 119
3.5.2.1.3.10.3 Configure Transit Correction Mode for Coordination—MaxInhibit ..... 119
3.5.2.1.3.10.4 Configure Transit Correction Mode for Coordination—Maximum 3 ..... 119
3.5.2.1.4 Manage Phase-Based Timing Patterns Requirements ..... 119
3.5.2.1.4.1 Configure Phase-Based Timing Patterns Requirements ..... 119
3.5.2.1.4.1.1 Configure Pattern Cycle Time ..... 120
3.5.2.1.4.1.2 Configure Pattern Offset Time ..... 120
3.5.2.1.4.1.3 Configure Pattern Split Association ..... 120
3.5.2.1.4.1.4 Configure Pattern Sequence Association ..... 120
3.5.2.1.4.1.5 Configure Pattern Maximum Mode ..... 120
3.5.2.1.4.2 Retrieve Phase-Based Timing Patterns Requirements ..... 120
3.5.2.1.4.2.1 Determine Maximum Number of Phase-Based Timing Pattern ..... 120
3.5.2.1.4.2.2 Determine Phase-Based Timing Pattern Type ..... 121
3.5.2.1.5 Manage Splits Configuration Requirements ..... 121
3.5.2.1.5.1 Configure Split Requirements ..... 121
3.5.2.1.5.1.1 Configure Phase Split Time ..... 121
3.5.2.1.5.1.2 Configure Phase Split Mode Requirements ..... 121
3.5.2.1.5.1.3 Configure Split Coordination Phase ..... 122
3.5.2.1.5.1.4 Configure Pre-Timed Split ..... 122
3.5.2.1.5.2 Retrieve Split Requirements ..... 122
3.5.2.1.5.2.1 Determine Maximum Number of Phase Splits ..... 123
3.5.2.1.6 Manage Ring Configuration Requirements ..... 123
3.5.2.1.6.1 Configure Ring Requirements ..... 123
3.5.2.1.6.1.1 Configure Sequence Data ..... 123
3.5.2.1.6.2 Retrieve Rings Requirements ..... 123

© 2023 AASHTO / ITE / NEMA Do Not Copy Without Written Permission

3.5.2.1.6.2.1 Determine Maximum Number of Rings ..... 123
3.5.2.1.6.2.2 Determine Maximum Number of Sequences ..... 123
3.5.2.1.7 Manage Channel Configuration Requirements ..... 123
3.5.2.1.7.1 Configure Channel Requirements ..... 123
3.5.2.1.7.1.1 Configure Channel Control Source ..... 123
3.5.2.1.7.1.2 Configure Channel Control Type Requirements ..... 123
3.5.2.1.7.1.3 Configure Channel Flash Enable/Disable Requirements ..... 124
3.5.2.1.7.1.4 Configure Channel Dim Enable/Disable Requirements ..... 125
3.5.2.1.7.2 Retrieve Channel Requirements ..... 125
3.5.2.1.7.2.1 Determine Maximum Number of Channels ..... 125
3.5.2.1.8 Manage Overlap Configuration Requirements ..... 125
3.5.2.1.8.1 Configure Overlap Requirements ..... 125
3.5.2.1.8.1.1 Configure Overlap Type Requirements ..... 125
3.5.2.1.8.1.2 Configure Overlap Included Phases ..... 127
3.5.2.1.8.1.3 Configure Overlap Modifier Phases ..... 127
3.5.2.1.8.1.4 Configure Pedestrian Modifier Phases ..... 127
3.5.2.1.8.1.5 Configure Overlap Trailing Green ..... 127
3.5.2.1.8.1.6 Configure Overlap Trailing Yellow ..... 128
3.5.2.1.8.1.7 Configure Overlap Trailing Red Clearance ..... 128
3.5.2.1.8.1.8 Configure Overlap Walk ..... 128
3.5.2.1.8.1.9 Configure Overlap Pedestrian Clearance ..... 128
3.5.2.1.8.2 Retrieve Overlaps Requirements ..... 128
3.5.2.1.8.2.1 Determine Maximum Number of Overlaps ..... 128
3.5.2.1.9 Manage Preempt Configuration Requirements ..... 128
3.5.2.1.9.1 Configure Preempts for Phase-Based ASC Requirements ..... 128
3.5.2.1.9.1.1 Enable/Disable Preempt Inputs ..... 128
3.5.2.1.9.1.2 Configure Preempt Control Requirements ..... 128
3.5.2.1.9.1.3 Configure Preempt Link ..... 129
3.5.2.1.9.1.4 Configure Preempt Delay ..... 129
3.5.2.1.9.1.5 Configure Preempt Minimum Duration ..... 129
3.5.2.1.9.1.6 Configure Preempt Enter Minimum Green Time ..... 129
3.5.2.1.9.1.7 Configure Preempt Enter Minimum Walk Time ..... 130
3.5.2.1.9.1.8 Configure Preempt Enter Pedestrian Clearance Time ..... 130
3.5.2.1.9.1.9 Configure Preempt Track Clearance Time ..... 130
3.5.2.1.9.1.10 Configure Preempt Minimum Dwell Time ..... 130
3.5.2.1.9.1.11 Configure Preempt Maximum Presence Time ..... 130
3.5.2.1.9.1.12 Configure Preempt Track Clearance Phases ..... 130
3.5.2.1.9.1.13 Configure Preempt Dwell Phases ..... 130
3.5.2.1.9.1.14 Configure Preempt Dwell Pedestrian Movements ..... 131
3.5.2.1.9.1.15 Configure Preempt Exit Phases ..... 131
3.5.2.1.9.1.16 Configure Preempt Exit Phase Strategy Requirements ..... 131
3.5.2.1.9.1.17 Configure Preempt Track Overlap ..... 131
3.5.2.1.9.1.18 Configure Preempt Dwell Overlap ..... 131
3.5.2.1.9.1.19 Configure Preempt Cycling Phases ..... 131
3.5.2.1.9.1.20 Configure Preempt Cycling Pedestrian Movements ..... 132
3.5.2.1.9.1.21 Configure Preempt Cycling Overlaps ..... 132
3.5.2.1.9.1.22 Configure Preempt Enter Yellow Change Time ..... 132
3.5.2.1.9.1.23 Configure Preempt Enter Red Clearance Time ..... 132
3.5.2.1.9.1.24 Configure Preempt Track Yellow Change Time ..... 132
3.5.2.1.9.1.25 Configure Preempt Track Red Clearance Time ..... 132
3.5.2.1.9.1.26 Configure Preempt Exit Priority Levels ..... 132
3.5.2.1.9.1.27 Configure Preempt Max Presence Exceeded Requirements ..... 132
3.5.2.1.9.1.28 Configure Preempt Cycling Phases Sequence ..... 133
3.5.2.1.9.1.29 Configure Preempt Enter Minimum Bicycle Time ..... 133
3.5.2.1.9.1.30 Configure Preempt Enter Bicycle Clearance Time ..... 133
3.5.2.1.9.1.31 Configure Preempt Cycling Bicycle Phases ..... 133

 © 2023 AASHTO / ITE / NEMA

3.5.2.1.9.1.32 Configure Preempt Enter Minimum Transit Time ..... 133
3.5.2.1.9.1.33 Configure Preempt Enter Transit Clearance Time ..... 133
3.5.2.1.9.1.34 Configure Preempt Cycling Transit Phases ..... 134
3.5.2.1.9.1.35 Configure Preempt Gate Description ..... 134
3.5.2.1.9.2 Retrieve Preempt Configuration for Phase-Based ASC Requirements ..... 134
3.5.2.1.9.2.1 Determine Maximum Number of Preempts ..... 134
3.5.2.1.10 Manage Timing Pattern Scheduler Requirements ..... 134
3.5.2.1.10.1 Configure Timing Pattern Scheduler Requirements ..... 134
3.5.2.1.10.1.1 Configure Timebase Pattern Synchronization Time ..... 134
3.5.2.1.10.1.2 Configure Timebased Action—Pattern ..... 134
3.5.2.1.10.1.3 Configure Timebased Action—Auxiliary Functions Requirements ..... 134
3.5.2.1.10.1.4 Configure Timebased Action—Special Functions Requirements ..... 135
3.5.2.1.10.2 Retrieve Timing Pattern Scheduler Requirements ..... 135
3.5.2.1.10.2.1 Determine Maximum Number of Timebased Actions ..... 136
3.5.2.1.10.2.2 Determine Action in Effect ..... 136
3.5.2.1.11 Manage I/O Mapping Requirements ..... 136
3.5.2.1.11.1 Configure I/O Mapping Requirements ..... 136
3.5.2.1.11.1.1 Set Active I/O Map ..... 136
3.5.2.1.11.1.2 Configure I/O Map Requirements ..... 137
3.5.2.1.11.2 Determine I/O Mapping Requirements ..... 137
3.5.2.1.11.2.1 Retrieve Maximum Number of I/O Maps ..... 137
3.5.2.1.11.2.2 Retrieve Maximum Number of I/O Map Inputs ..... 138
3.5.2.1.11.2.3 Retrieve Maximum Number of I/O Map Outputs ..... 138
3.5.2.1.11.2.4 Retrieve I/O Mapping Activate Conditions ..... 138
3.5.2.1.11.2.5 Retrieve I/O Mapping Input Functions ..... 138
3.5.2.1.11.2.6 Retrieve I/O Mapping Output Functions ..... 138
3.5.2.1.11.2.7 Retrieve I/O Map Input Device Pin Status ..... 138
3.5.2.1.11.2.8 Retrieve I/O Map Output Device Pin Status ..... 138
3.5.2.1.11.2.9 Enumerate I/O Mapping Device Pin Requirements ..... 138
3.5.2.1.12 Manage Intra-Cabinet Communications Requirements ..... 139
3.5.2.1.12.1 Determine Serial Bus 1 Device Present ..... 139
3.5.2.1.12.2 Retrieve Intra-Cabinet Communications Requirements—TS2 ..... 139
3.5.2.1.12.2.1 Determine TS2 Port 1 Device Present ..... 139
3.5.2.1.12.2.2 Determine TS2 Port 1 Frame 40 Enable ..... 139
3.5.2.1.13 Manage ADA Support Requirements ..... 139
3.5.2.1.13.1 Configure ADA Support Requirements ..... 139
3.5.2.1.13.1.1 Configure APS Push Button Minimum Press Time ..... 139
3.5.2.1.13.1.2 Configure APS Push Button to Phase Association ..... 140
3.5.2.1.13.1.3 Configure APS Extra Crossing Time ..... 140
3.5.2.1.13.2 Determine Maximum Number of Pedestrian Buttons ..... 140
3.5.2.1.14 Manage Block Object Requirements ..... 140
3.5.2.1.14.1 Configure Block Object Requirements ..... 140
3.5.2.1.14.1.1 Configure Block Object Get Control Requirements ..... 140
3.5.2.1.14.1.2 Configure Block Data ..... 146
3.5.2.1.14.2 Retrieve Block Object Requirements ..... 146
3.5.2.1.14.2.1 Monitor Block Object Get Control ..... 146
3.5.2.1.14.2.2 Monitor Block Data ..... 146
3.5.2.1.14.2.3 Monitor Block Error Status Requirements ..... 146
3.5.2.2 Monitor Signal Operations Requirements ..... 147
3.5.2.2.1 Determine Controller Health Requirements ..... 147
3.5.2.2.1.1 Determine Alarm Status Requirements ..... 147
3.5.2.2.1.1.1 Monitor Preempt Active ..... 147
3.5.2.2.1.1.2 Monitor Terminal and Facilities Flash ..... 147
3.5.2.2.1.1.3 Monitor Local Cycle Zero Alarm ..... 147
3.5.2.2.1.1.4 Monitor Local Override ..... 147
3.5.2.2.1.1.5 Monitor Coordination Alarm ..... 147

© 2023 AASHTO / ITE / NEMA Do Not Copy Without Written Permission

3.5.2.2.1.1.6 Monitor Detector Fault ..... 148
3.5.2.2.1.1.7 Monitor Non-Critical Alarm ..... 148
3.5.2.2.1.1.8 Monitor Stop Time Input Alarm ..... 148
3.5.2.2.1.1.9 Monitor Cycle Fault Alarm ..... 148
3.5.2.2.1.1.10 Monitor Coordination Fault ..... 148
3.5.2.2.1.1.11 Monitor Coordination Fail Alarm ..... 148
3.5.2.2.1.1.12 Monitor Cycle Fail Alarm ..... 148
3.5.2.2.1.1.13 Monitor SMU Flash Alarm ..... 148
3.5.2.2.1.1.14 Monitor Local Flash Alarm ..... 148
3.5.2.2.1.1.15 Monitor Local Free Alarm ..... 148
3.5.2.2.1.1.16 Monitor Coordination Active Alarm ..... 149
3.5.2.2.1.1.17 Monitor Power Restart Alarm ..... 149
3.5.2.2.1.1.18 Monitor Low Battery Alarm ..... 149
3.5.2.2.1.1.19 Monitor Response Fault Alarm ..... 149
3.5.2.2.1.1.20 Monitor External Start ..... 149
3.5.2.2.1.1.21 Monitor Stop Time Alarm ..... 149
3.5.2.2.1.1.22 Monitor Offset Transitioning Alarm ..... 149
3.5.2.2.1.1.23 Monitor Stall Condition ..... 149
3.5.2.2.1.1.24 Monitor Memory Fault ..... 149
3.5.2.2.1.1.25 Monitor Process Failure ..... 150
3.5.2.2.1.1.26 Monitor Communications Timeout ..... 150
3.5.2.2.1.1.27 Monitor Power Problems ..... 150
3.5.2.2.1.1.28 Monitor UPS Errors ..... 150
3.5.2.2.1.1.29 Monitor Scheduler Errors ..... 150
3.5.2.2.1.1.30 Monitor Signal Monitor Communications Error ..... 150
3.5.2.2.1.1.31 Monitor Signal Monitor Unit Presence ..... 150
3.5.2.2.1.1.32 Monitor USB Memory Device ..... 150
3.5.2.2.1.1.33 Monitor ASC Cabinet Temperature Alarm ..... 150
3.5.2.2.1.1.34 Monitor ASC Cabinet Humidity Alarm ..... 150
3.5.2.2.1.1.35 Monitor Clock Failure ..... 151
3.5.2.2.1.1.36 Monitor Preempt Maximum Presence Alarm ..... 151
3.5.2.2.1.1.37 Monitor RSU Watchdog Timer ..... 151
3.5.2.2.1.1.38 Monitor CV Certificate Faults ..... 151
3.5.2.2.1.2 Monitor Alarm Group State ..... 151
3.5.2.2.2 Retrieve Mode of Operation Requirements ..... 151
3.5.2.2.2.1 Monitor Unit Control Status ..... 151
3.5.2.2.2.2 Monitor External Minimum Recall ..... 152
3.5.2.2.2.3 Monitor Call to Non-Actuated 1 ..... 152
3.5.2.2.2.4 Monitor Call to Non-Actuated 2 ..... 152
3.5.2.2.2.5 Monitor Walk Rest Modifier ..... 152
3.5.2.2.2.6 Monitor Interconnect ..... 152
3.5.2.2.2.7 Monitor Dimming Enabled ..... 152
3.5.2.2.2.8 Monitor Unit Flash Status ..... 152
3.5.2.2.2.9 Monitor Current Timing Pattern Requirements ..... 152
3.5.2.2.2.9.1 Monitor Current Pattern Status ..... 152
3.5.2.2.2.9.2 Monitor Local Free Status ..... 153
3.5.2.2.2.9.3 Monitor Current Mode of Operation ..... 153
3.5.2.2.2.9.4 Monitor Programmed Pattern ..... 153
3.5.2.2.2.10 Monitor Current Cycle Requirements ..... 153
3.5.2.2.2.10.1 Monitor Coordination Cycle Status ..... 153
3.5.2.2.2.10.2 Monitor Coordination Synchronization Status ..... 154
3.5.2.2.2.10.3 Monitor Current Split ..... 154
3.5.2.2.2.10.4 Monitor Current Offset ..... 154
3.5.2.2.3 Monitor Current Signal Indications Requirements ..... 154
3.5.2.2.3.1 Determine Maximum Number of Phase Groups ..... 154
3.5.2.2.3.2 Monitor Phase Group Reds ..... 154

 © 2023 AASHTO / ITE / NEMA

3.5.2.2.3.3 Monitor Phase Group Yellows ..... 154
3.5.2.2.3.4 Monitor Phase Group Greens ..... 154
3.5.2.2.3.5 Monitor Phase Group Don't Walks ..... 154
3.5.2.2.3.6 Monitor Phase Group Pedestrian Clearance ..... 154
3.5.2.2.3.7 Monitor Phase Group Walks ..... 155
3.5.2.2.3.8 Monitor Phase Group Flashing Yellow Arrow ..... 155
3.5.2.2.3.9 Monitor Phase Group Flashing Red Arrow ..... 155
3.5.2.2.4 Monitor Current Phase Requirements ..... 155
3.5.2.2.4.1 Monitor Phase Group Phase Ons ..... 155
3.5.2.2.4.2 Monitor Phase Group Phase Nexts ..... 155
3.5.2.2.4.3 Monitor Phase Group Vehicle Call ..... 155
3.5.2.2.4.4 Monitor Phase Group Pedestrian Call ..... 155
3.5.2.2.4.5 Monitor Phase Group Bicycle Call ..... 155
3.5.2.2.4.6 Monitor Phase Group Transit Call ..... 155
3.5.2.2.5 Retrieve Current Ring Requirements ..... 155
3.5.2.2.5.1 Monitor Ring Status ..... 156
3.5.2.2.5.2 Monitor Ring Termination Cause ..... 156
3.5.2.2.6 Retrieve Current Channel Status Requirements ..... 156
3.5.2.2.6.1 Determine Maximum Number of Channel Status Groups ..... 156
3.5.2.2.6.2 Monitor Channel Status Group Reds ..... 156
3.5.2.2.6.3 Monitor Channel Status Group Yellows ..... 157
3.5.2.2.6.4 Monitor Channel Status Group Greens ..... 157
3.5.2.2.7 Retrieve Current Overlap Status Requirements ..... 157
3.5.2.2.7.1 Determine Maximum Number of Overlap Status Groups ..... 157
3.5.2.2.7.2 Monitor Overlap Status Group Reds ..... 157
3.5.2.2.7.3 Monitor Overlap Status Group Yellows ..... 157
3.5.2.2.7.4 Monitor Overlap Status Group Greens ..... 157
3.5.2.2.7.5 Monitor Overlap Status Group Flashing Yellow Arrows ..... 157
3.5.2.2.7.6 Monitor Overlap Status Group Flashing Red Arrows ..... 157
3.5.2.2.8 Retrieve Current Preempt Status Requirements ..... 157
3.5.2.2.8.1 Monitor Currently Active Preempt ..... 157
3.5.2.2.8.2 Monitor Current Preempt Inputs ..... 158
3.5.2.2.8.3 Monitor Current Preempt State ..... 158
3.5.2.2.8.4 Monitor Current Gate Status ..... 158
3.5.2.2.9 Retrieve Special Function Outputs Requirements ..... 158
3.5.2.2.9.1 Determine Maximum Number of Special Functions ..... 158
3.5.2.2.9.2 Monitor Special Function State ..... 158
3.5.2.2.9.3 Monitor Special Function Status ..... 158
3.5.2.2.9.4 Monitor Special Function Control Source ..... 159
3.5.2.2.10 Monitor Timebase Action Status Requirements ..... 159
3.5.2.2.10.1 Monitor Timebase Action Status ..... 159
3.5.2.2.10.2 Monitor Timebase Timing Pattern Status ..... 159
3.5.2.2.11 Monitor Intra-Cabinet Communications Requirements ..... 159
3.5.2.2.11.1 Monitor TS2 Port 1 Status ..... 159
3.5.2.2.11.2 Monitor TS2 Port 1 Fault Frame ..... 159
3.5.2.2.11.3 Monitor Serial Bus 1 Status ..... 159
3.5.2.3 Manage Signal Operations Control Requirements ..... 160
3.5.2.3.1 Control ASC Function Requirements ..... 160
3.5.2.3.1.1 Control External Minimum Recall ..... 160
3.5.2.3.1.2 Control Call to Non-Actuated 1 ..... 160
3.5.2.3.1.3 Control Call to Non-Actuated 2 ..... 160
3.5.2.3.1.4 Control Walk Rest Modifier ..... 160
3.5.2.3.1.5 Control Interconnect ..... 160
3.5.2.3.1.6 Control Dimming Enabled ..... 160
3.5.2.3.1.7 Control Disable Remote Commands ..... 160
3.5.2.3.1.8 Acknowledge Local Cycle Zero Alarm ..... 160

© 2023 AASHTO / ITE / NEMA Do Not Copy Without Written Permission

3.5.2.3.1.9 Control Weather-Based Signal Operation Changes ..... 160
3.5.2.3.2 Command Timing Pattern Requirements ..... 161
3.5.2.3.2.1 Command System Timing Pattern ..... 161
3.5.2.3.2.2 Command System Timing Pattern System Reference Point ..... 161
3.5.2.3.3 Control Phases Requirements ..... 161
3.5.2.3.3.1 Control Phase Group Phase Omits ..... 161
3.5.2.3.3.2 Control Phase Group Pedestrian Omits ..... 161
3.5.2.3.3.3 Control Phase Group Holds ..... 161
3.5.2.3.3.4 Control Phase Group Force Offs ..... 161
3.5.2.3.3.5 Control Phase Group Vehicle Calls ..... 162
3.5.2.3.3.6 Control Phase Group Pedestrian Calls ..... 162
3.5.2.3.3.7 Control Phase Group Bicycle Calls ..... 162
3.5.2.3.3.8 Control Phase Group Transit Calls ..... 162
3.5.2.3.4 Control Preempt Requirements ..... 162
3.5.2.3.4.1 Command Preempt Remote Activation ..... 162
3.5.2.3.5 Control Ring Requirements ..... 162
3.5.2.3.5.1 Control Ring Stop Time ..... 162
3.5.2.3.5.2 Control Ring Force Offs ..... 163
3.5.2.3.5.3 Control Ring Maximum 2 Time Settings ..... 163
3.5.2.3.5.4 Control Ring Maximum 3 Time Settings ..... 163
3.5.2.3.5.5 Control Ring Maximum Inhibit Settings ..... 163
3.5.2.3.5.6 Control Ring Pedestrian Recycle Settings ..... 163
3.5.2.3.5.7 Control Ring Red Rest Settings ..... 163
3.5.2.3.5.8 Control Ring Red Clearance Omit Settings ..... 163
3.5.2.3.5.9 Determine Maximum Number of Ring Control Groups ..... 163
3.5.2.3.6 Special Functions Control Requirements ..... 164
3.5.2.3.6.1 Activate Special Function ..... 164
3.5.2.3.6.2 Release Special Function Control ..... 164
3.5.2.3.7 Control Frame 40 Requirements ..... 164
3.5.2.3.7.1 Control TS2 Port 1 Frame 40 Messages ..... 164
3.5.2.3.8 Activate Action Plan ..... 164
3.5.2.3.9 Remote Manual Control Requirements ..... 164
3.5.2.3.9.1 Enable Manual Control ..... 164
3.5.2.3.9.2 Remote Manual Control Advance Command ..... 164
3.5.2.3.9.3 Configure Manual Control Timeout ..... 164
3.5.3 Detector Management Requirements ..... 165
3.5.3.1 Manage Detector Configuration Requirements ..... 165
3.5.3.1.1 Configure Detectors Requirements ..... 165
3.5.3.1.1.1 Configure Vehicle Detectors Requirements ..... 165
3.5.3.1.1.1.1 Configure Vehicle Volume Detectors ..... 165
3.5.3.1.1.1.2 Configure Vehicle Occupancy Detectors ..... 165
3.5.3.1.1.1.3 Configure Vehicle Speed Detectors ..... 165
3.5.3.1.1.1.4 Configure Vehicle Detection Zone Length ..... 165
3.5.3.1.1.1.5 Configure Vehicle Travel Mode ..... 165
3.5.3.1.1.1.6 Configure Vehicle Detector Yellow Lock Call Enabled ..... 165
3.5.3.1.1.1.7 Configure Vehicle Detector Red Lock Call Enabled ..... 166
3.5.3.1.1.1.8 Configure Vehicle Detector Passage Enabled ..... 166
3.5.3.1.1.1.9 Configure Vehicle Detector Added Initial Time Enabled ..... 166
3.5.3.1.1.1.10 Configure Vehicle Detector Queue Enabled ..... 166
3.5.3.1.1.1.11 Configure Vehicle Detector Call Enabled ..... 166
3.5.3.1.1.1.12 Configure Vehicle Detector Call Phase ..... 166
3.5.3.1.1.1.13 Configure Vehicle Detector Switch Phase ..... 166
3.5.3.1.1.1.14 Configure Vehicle Detector Delay Time ..... 166
3.5.3.1.1.1.15 Configure Vehicle Detector Extend Time ..... 166
3.5.3.1.1.1.16 Configure Vehicle Detector Queue Limit Time ..... 167
3.5.3.1.1.1.17 Configure Vehicle Detector No Activity Time ..... 167

 © 2023 AASHTO / ITE / NEMA

3.5.3.1.1.1.18 Configure Vehicle Detector Maximum Presence Time ..... 167
3.5.3.1.1.1.19 Configure Vehicle Detector Erratic Counts ..... 167
3.5.3.1.1.1.20 Configure Vehicle Detector Fail Time ..... 167
3.5.3.1.1.1.21 Configure Single Detector Speed Mode ..... 167
3.5.3.1.1.1.22 Configure Paired Detector ..... 167
3.5.3.1.1.1.23 Configure Paired Detector Placement ..... 168
3.5.3.1.1.1.24 Configure Paired Detector Spacing ..... 168
3.5.3.1.1.1.25 Configure Average Vehicle Length ..... 168
3.5.3.1.1.2 Configure Pedestrian Detectors Requirements ..... 168
3.5.3.1.1.2.1 Configure Pedestrian Detector Call Phase ..... 168
3.5.3.1.1.2.2 Configure Pedestrian Detector No Activity Time ..... 168
3.5.3.1.1.2.3 Configure Pedestrian Detector Maximum Presence Time ..... 168
3.5.3.1.1.2.4 Configure Pedestrian Detector Erratic Counts ..... 168
3.5.3.1.1.2.5 Configure Pedestrian Detector Non-Lock Calls ..... 168
3.5.3.1.1.2.6 Configure Pedestrian Detector Alternate Pedestrian Timing ..... 169
3.5.3.1.1.2.7 Configure Pedestrian Detector Type ..... 169
3.5.3.1.2 Retrieve Detector Configuration Requirements ..... 169
3.5.3.1.2.1 Retrieve Vehicle Detectors Requirements ..... 169
3.5.3.1.2.1.1 Determine Maximum Number of Vehicle Detectors ..... 169
3.5.3.1.2.2 Retrieve Pedestrian Detectors Requirements ..... 169
3.5.3.1.2.2.1 Determine Maximum Number of Pedestrian Detectors ..... 169
3.5.3.2 Retrieve Detector Status Requirements ..... 169
3.5.3.2.1 Monitor Vehicle Detector Status Groups Requirements ..... 169
3.5.3.2.1.1 Determine Maximum Number of Vehicle Detector Status Groups ..... 169
3.5.3.2.1.2 Monitor Vehicle Detector Status Group Active ..... 169
3.5.3.2.1.3 Monitor Vehicle Detector Status Group Alarm Status ..... 170
3.5.3.2.2 Monitor Pedestrian Detector Status Requirements ..... 170
3.5.3.2.2.1 Determine Maximum Number of Pedestrian Detector Status Groups ..... 170
3.5.3.2.2.2 Monitor Pedestrian Detector Status Active ..... 170
3.5.3.2.2.3 Monitor Pedestrian Detector Alarm Status ..... 170
3.5.3.3 Retrieve Detector Health Requirements ..... 170
3.5.3.3.1 Retrieve Vehicle Detector Health Requirements ..... 170
3.5.3.3.1.1 Monitor Vehicle Detector No Activity Fault ..... 170
3.5.3.3.1.2 Monitor Vehicle Detector Max Presence Fault ..... 170
3.5.3.3.1.3 Monitor Vehicle Detector Erratic Output Fault ..... 170
3.5.3.3.1.4 Monitor Vehicle Detector Communications Fault ..... 171
3.5.3.3.1.5 Monitor Vehicle Detector Configuration Fault ..... 171
3.5.3.3.2 Retrieve Vehicle Loop Detector Requirements ..... 171
3.5.3.3.2.1 Monitor Loop Vehicle Detector Watchdog Failure ..... 171
3.5.3.3.2.2 Monitor Loop Vehicle Detector Open Loop Failure ..... 171
3.5.3.3.2.3 Monitor Loop Vehicle Detector Shorted Loop Fault ..... 171
3.5.3.3.2.4 Monitor Loop Vehicle Detector Excessive Change Fault ..... 171
3.5.3.3.3 Retrieve Pedestrian Detector Health Requirements ..... 171
3.5.3.3.3.1 Monitor Pedestrian Detector No Activity Fault ..... 171
3.5.3.3.3.2 Monitor Pedestrian Detector Max Presence Fault ..... 171
3.5.3.3.3.3 Monitor Pedestrian Detector Erratic Output Fault ..... 171
3.5.3.3.3.4 Monitor Pedestrian Detector Communications Fault ..... 172
3.5.3.3.3.5 Monitor Pedestrian Detector Configuration Fault ..... 172
3.5.3.4 Control Detector Requirements ..... 172
3.5.3.4.1 Control Vehicle Detector Reset ..... 172
3.5.3.4.2 Control Pedestrian Detector Reset ..... 172
3.5.3.4.3 Control Vehicle Detector Actuation ..... 172
3.5.3.4.4 Control Pedestrian Detector Actuation ..... 172
3.5.3.5 Manage Vehicle Detector Data Collection Requirements ..... 172
3.5.3.5.1 Configure Vehicle Detector Data Collection Requirements ..... 172
3.5.3.5.1.1 Configure Detector Data Collection Sample Period Requirements ..... 172

© 2023 AASHTO / ITE / NEMA Do Not Copy Without Written Permission

3.5.3.5.1.1.1 Configure Detector Data Sample Period ..... 173
3.5.3.5.1.1.2 Configure Detector Data Sample Period—Version 3 ..... 173
3.5.3.5.2 Retrieve Vehicle Detector Data Collection Requirements ..... 173
3.5.3.5.2.1 Retrieve Detector Data Collection Sample Period Requirements ..... 173
3.5.3.5.2.1.1 Monitor Detector Data Sequence ..... 173
3.5.3.5.2.1.2 Determine Detector Data Active Detectors ..... 173
3.5.3.5.2.1.3 Monitor Volume Data ..... 173
3.5.3.5.2.1.4 Monitor Average Speed ..... 173
3.5.3.5.2.1.5 Monitor Occupancy Data ..... 173
3.5.3.5.2.1.6 Monitor Vehicle Detector Data Alarms ..... 174
3.5.3.5.2.1.7 Monitor Detector Data Sample Time ..... 174
3.5.3.5.2.1.8 Monitor Detector Data Sample Duration ..... 174
3.5.3.6 Manage Pedestrian Detector Data Collection Requirements ..... 174
3.5.3.6.1 Configure Pedestrian Detector Data Collection Requirements ..... 174
3.5.3.6.1.1 Configure Pedestrian Data Collection Sample Period ..... 174
3.5.3.6.2 Retrieve Pedestrian Detector Data Collection Requirements ..... 174
3.5.3.6.2.1 Monitor Pedestrian Counts ..... 174
3.5.3.6.2.2 Monitor Pedestrian Detector Actuations ..... 175
3.5.3.6.2.3 Monitor Pedestrian Detector Data Alarms ..... 175
3.5.3.6.2.4 Monitor Pedestrian Services ..... 175
3.5.3.6.2.5 Determine Pedestrian Detector Data Active Detectors ..... 175
3.5.3.6.2.6 Monitor Pedestrian Detector Data Sample Time ..... 175
3.5.3.6.2.7 Monitor Pedestrian Detector Data Sample Duration ..... 175
3.5.3.6.2.8 Monitor Pedestrian Detector Data Sequence ..... 175
3.5.4 Connected Vehicles Interface Management ..... 175
3.5.4.1 Manage Management Station—ASC Interface Requirements ..... 176
3.5.4.1.1 Manage RSU Interface Requirements ..... 176
3.5.4.1.1.1 Configure RSU Interface ..... 176
3.5.4.1.1.2 Configure Logical RSU Ports ..... 176
3.5.4.1.1.3 Configure RSU Interface Polling Period ..... 176
3.5.4.1.2 Manage RSU Interface Watchdog Requirements ..... 176
3.5.4.1.2.1 Configure RSU Interface Watchdog ..... 176
3.5.4.1.2.2 Monitor RSU Interface Watchdog Timer ..... 176
3.5.4.1.3 Manage Signal Phase and Timing Requirements ..... 177
3.5.4.1.3.1 Enable Signal Phase and Timing Data ..... 177
3.5.4.1.3.2 Retrieve Intersection Identifier [Deprecated] ..... 177
3.5.4.1.3.3 Retrieve Signal Phase and Timing Time Point [Deprecated] ..... 177
3.5.4.1.3.4 Retrieve Signal Phase and Timing Generation Time ..... 178
3.5.4.1.3.5 Retrieve Signal Phase and Timing Intersection Status [Deprecated] ..... 178
3.5.4.1.3.6 Exchange Movement Status Requirements ..... 178
3.5.4.1.3.6.1 Monitor Movement State [Deprecated] ..... 178
3.5.4.1.3.6.2 Retrieve Movement Timing Requirements ..... 178
3.5.4.1.3.6.3 Configure Movement Assistance Requirements ..... 181
3.5.4.1.3.6.4 Retrieve Movement Assistance Requirements ..... 182
3.5.4.1.3.6.5 Manage Advisory Speed Requirements ..... 184
3.5.4.1.3.6.6 Monitor Movement Status [Deprecated] ..... 185
3.5.4.1.3.6.7 Monitor Lane Connection Maneuver Status [Deprecated] ..... 185
3.5.4.1.3.6.8 Monitor Movement State V2 ..... 185
3.5.4.1.3.6.9 Monitor Next Movement State ..... 186
3.5.4.1.3.6.10 Monitor Movement Status V2 ..... 186
3.5.4.1.3.7 Manage Enabled Lane Requirements ..... 186
3.5.4.1.3.7.1 Configure Concurrent Enabled Lanes ..... 186
3.5.4.1.3.7.2 Configure Enabled Lanes for a Pattern [Deprecated] ..... 186
3.5.4.1.3.7.3 Command Enabled Lanes [Deprecated] ..... 186
3.5.4.1.3.7.4 Configure Enabled Lanes by Time of Day ..... 187
3.5.4.1.3.7.5 Determine Lanes Enabled ..... 187

 © 2023 AASHTO / ITE / NEMA

3.5.4.1.3.7.6 Command Enabled Lanes V2 ..... 187
3.5.4.1.3.8 Configure Movement Type [Deprecated] ..... 187
3.5.4.1.3.9 Configure Lane Connection Type [Deprecated] ..... 187
3.5.4.1.3.10 Enable Signal Phase and Timing Data Exchange ..... 187
3.5.4.1.3.11 Configure Road Authority ..... 187
3.5.4.1.3.12 Retrieve Signal Phase and Timing Intersection Status Requirements ..... 188
3.5.4.1.3.12.1 Monitor Manual Control Indication ..... 188
3.5.4.1.3.12.2 Monitor Stop Indication ..... 188
3.5.4.1.3.12.3 Monitor Failure Flash Indication ..... 188
3.5.4.1.3.12.4 Monitor Preemption Operation Indication ..... 189
3.5.4.1.3.12.5 Monitor Priority Operation Indication ..... 189
3.5.4.1.3.12.6 Monitor Fixed Time Control Indication ..... 189
3.5.4.1.3.12.7 Monitor Non-Fixed Time Control Indication ..... 189
3.5.4.1.3.12.8 Monitor Standby Operation Indication ..... 189
3.5.4.1.3.12.9 Monitor Controller Failure ..... 190
3.5.4.1.3.12.10 Monitor MAP Message Validity ..... 190
3.5.4.1.3.12.11 Monitor SPaT Data Validity ..... 190
3.5.4.1.3.13 Mark SPaT Invalid—Controller ..... 190
3.5.4.1.3.14 Mark SPaT Invalid—Port ..... 190
3.5.4.1.3.15 Mark MAP Message Invalid—Controller ..... 190
3.5.4.1.3.16 Mark MAP Message Invalid—Port ..... 191
3.5.4.1.3.17 Manage Signal Group Requirements ..... 191
3.5.4.1.3.17.1 Determine Maximum Number of Signal Groups ..... 191
3.5.4.1.3.17.2 Configure Signal Group Intersection Mapping ..... 191
3.5.4.1.3.17.3 Configure Signal Group Control Source ..... 191
3.5.4.1.3.17.4 Configure Signal Group Indication Types ..... 191
3.5.4.1.3.17.5 Configure Signal Group Permissive Control Source ..... 191
3.5.4.1.3.17.6 Configure Signal Group Lanes ..... 191
3.5.4.1.3.17.7 Determine Maximum Number of Signal State Entries ..... 191
3.5.4.1.3.17.8 Configure Signal State Parameters ..... 192
3.5.4.1.3.18 Retrieve Signal Phase and Timing Time Point V2 ..... 192
3.5.4.2 Manage Management Station – CV Roadside Process Interface Requirements [Deprecated] ..... 192
3.5.4.2.1 Manage Roadway Geometrics Information Requirements [Deprecated] ..... 192
3.5.4.2.1.1 Configure Roadway Geometry Plans Requirements [Deprecated] ..... 193
3.5.4.2.1.1.1 Configure Intersection Identifier [Deprecated] ..... 193
3.5.4.2.1.1.2 Configure Intersection Location [Deprecated] ..... 193
3.5.4.2.1.1.3 Configure Intersection Name [Deprecated] ..... 193
3.5.4.2.1.1.4 Configure Intersection Default Lane Width [Deprecated] ..... 193
3.5.4.2.1.1.5 Manage Lane Requirements [Deprecated] ..... 193
3.5.4.2.1.1.6 Configure Node Point Requirements [Deprecated] ..... 197
3.5.4.2.1.1.7 Configure Computed Lane Requirements [Deprecated] ..... 199
3.5.4.2.1.1.8 Configure Overlays [Deprecated] ..... 200
3.5.4.2.1.1.9 Configure Applicable Users [Deprecated] ..... 200
3.5.4.2.1.2 Retrieve Roadway Geometry Plans Requirements [Deprecated] ..... 200
3.5.4.2.1.2.1 Determine Maximum Number of Intersections Supported [Deprecated] ..... 200
3.5.4.2.1.2.2 Determine Maximum Number of Lanes Supported [Deprecated] ..... 200
3.5.4.2.1.2.3 Determine Maximum Number of Computed Lanes Supported [Deprecated] ..... 201
3.5.4.2.1.2.4 Determine Maximum Number of Node Points Supported [Deprecated] ..... 201
3.5.4.2.1.2.5 Determine Maximum Number of Speed Limits Supported [Deprecated] ..... 201
3.5.4.2.1.2.6 Determine Maximum Number of Vehicle Type Definitions [Deprecated] ..... 201
3.5.4.2.1.3 Configure Roadway Geometry Plan Metadata Requirements [Deprecated] ..... 201
3.5.4.2.1.3.1 Configure Roadway Geometry Plan Process Method [Deprecated] ..... 201
3.5.4.2.1.3.2 Configure Roadway Geometry Plan Process Agency [Deprecated] ..... 201
3.5.4.2.1.3.3 Configure Roadway Geometry Plan Date [Deprecated] ..... 201
3.5.4.2.1.3.4 Configure Roadway Geometry Plan Geoid [Deprecated] ..... 201

© 2023 AASHTO / ITE / NEMA Do Not Copy Without Written Permission

3.5.4.2.1.3.5 Configure Roadway Geometry Plan Layer Type [Deprecated] ..... 201
3.5.4.2.1.3.6 Configure Roadway Geometry Plan Layer Identifier [Deprecated] ..... 202
3.5.4.2.2 Manage Movement Configuration for Connected Devices Requirements [Deprecated] ..... 202
3.5.4.2.2.1 Configure Lane Connections Requirements [Deprecated] ..... 202
3.5.4.2.2.1.1 Configure Connecting Lane [Deprecated] ..... 202
3.5.4.2.2.1.2 Configure Connecting Maneuver [Deprecated] ..... 202
3.5.4.2.2.1.3 Configure Remote Intersection Identifier [Deprecated] ..... 202
3.5.4.2.2.1.4 Configure Matching Signal Group [Deprecated] ..... 202
3.5.4.2.2.2 Configure Lane Connection Users [Deprecated] ..... 202
3.5.4.2.2.3 Configure Connection Identifier [Deprecated] ..... 203
3.5.4.2.2.4 Configure MAP Plans [Deprecated] ..... 203
3.5.4.2.2.5 Determine Maximum Number of Signal Groups Supported [Deprecated] ..... 203
3.5.4.2.2.6 Determine Maximum Number of Lane Connections Supported [Deprecated] ..... 203
3.5.4.2.2.7 Command MAP Plans [Deprecated] ..... 203
3.5.4.2.3 Manage Collection of Connected Devices Data Requirements [Deprecated] ..... 203
3.5.4.2.3.1 Configure Connected Device Detector Requirements [Deprecated] ..... 203
3.5.4.2.3.1.1 Enable Connected Device Detection [Deprecated] ..... 204
3.5.4.2.3.1.2 Enable Connected Device Detector [Deprecated] ..... 204
3.5.4.2.3.1.3 Configure Connected Device Detector Reference Point [Deprecated] ..... 204
3.5.4.2.3.1.4 Configure Connected Device Detector Zone—Geographic [Deprecated] ..... 204
3.5.4.2.3.1.5 Configure Connected Device Detector Zone—Lane [Deprecated] ..... 204
3.5.4.2.3.1.6 Configure Connected Device Data Filters [Deprecated] ..... 204
3.5.4.2.3.1.7 Configure Connected Device Detector Assignments [Deprecated] ..... 204
3.5.4.2.3.1.8 Determine Maximum Number of Connected Device Detectors Supported [Deprecated] ..... 205
3.5.4.2.3.1.9 Determine Maximum Number of Connected Device Detectors Node Points Supported [Deprecated] ..... 205
3.5.4.2.3.2 Configure Connected Device Detector Output Requirements [Deprecated] ..... 205
3.5.4.2.3.2.1 Configure Connected Device Detector Outputs [Deprecated] ..... 205
3.5.4.2.3.2.2 Configure Actuation Sampling Period [Deprecated] ..... 205
3.5.4.2.3.2.3 Retrieve Actuation Report [Deprecated] ..... 205
3.5.4.2.3.2.4 Configure Detection Reports Data [Deprecated] ..... 205
3.5.4.2.3.2.5 Configure Detection Report Sampling Period [Deprecated] ..... 206
3.5.4.2.3.2.6 Retrieve Detection Report [Deprecated] ..... 206
3.5.4.2.4 Monitor Broadcasted MAP Messages Requirements [Deprecated] ..... 206
3.5.4.2.4.1 Monitor MAP Data Message Sequence [Deprecated] ..... 206
3.5.4.2.4.2 Monitor MAP Data Message Time [Deprecated] ..... 206
3.5.4.2.4.3 Monitor MAP Data Message Intersection Sequence [Deprecated] ..... 206
3.5.4.2.4.4 Monitor MAP Plan [Deprecated] ..... 206
3.5.4.2.5 Monitor Broadcasted SPaT Messages Requirements [Deprecated] ..... 206
3.5.4.2.5.1 Monitor Signal Phase and Timing Message Sequence [Deprecated] ..... 207
3.5.4.2.5.2 Monitor Signal Phase and Timing Message Timestamp [Deprecated] ..... 207
3.5.4.2.5.3 Monitor Intersection SPaT Message Timestamp [Deprecated] ..... 207
3.5.4.2.5.4 Monitor Enabled Lanes [Deprecated] ..... 207
3.5.4.3 ASC – CV Roadside Process Interface Requirements ..... 207
3.5.4.3.1 Exchange Current and Next Movement Information Requirements ..... 208
3.5.4.3.1.1 Provide Current and Next Movement Information Requirements ..... 208
3.5.4.3.1.1.1 Provide Intersection Identifier [Deprecated] ..... 208
3.5.4.3.1.1.2 Provide Signal Phase and Timing Intersection Status [Deprecated] ..... 208
3.5.4.3.1.1.3 Provide Movement Status Requirements ..... 208
3.5.4.3.1.1.4 Provide Movement Assistance Requirements ..... 212
3.5.4.3.1.1.5 Provide Advisory Speed Requirements ..... 214
3.5.4.3.1.1.6 Provide Intersection Channel Assignment [Deprecated] ..... 215
3.5.4.3.1.1.7 Provide Road Authority ID ..... 215
3.5.4.3.1.1.8 Provide Signal Phase and Timing Intersection Status V2 ..... 215

 © 2023 AASHTO / ITE / NEMA

3.5.4.3.1.1.9 Provide SPaT Information to a CV Roadside Process ..... 215
3.5.4.3.1.2 Retrieve Current and Next Movement Information Requirements [Deprecated] ..... 216
3.5.4.3.1.2.1 Retrieve Intersection Identifier [Deprecated] ..... 216
3.5.4.3.1.2.2 Retrieve Signal Phase and Timing Intersection Status [Deprecated] ..... 216
3.5.4.3.1.2.3 Retrieve Movement Status Requirements [Deprecated] ..... 216
3.5.4.3.1.2.4 Retrieve Movement Assistance Requirements [Deprecated] ..... 217
3.5.4.3.1.2.5 Retrieve Advisory Speed Requirements [Deprecated] ..... 218
3.5.4.3.1.2.6 Retrieve Intersection Channel Assignment [Deprecated] ..... 219
3.5.4.3.2 Exchange Next Occurrence of a Movement Requirements ..... 219
3.5.4.3.2.1 Provide Movement Next Occurrence [Deprecated] ..... 219
3.5.4.3.2.2 Retrieve Movement Next Occurrence [Deprecated] ..... 219
3.5.4.3.3 Exchange Presence of Connected Device Requirements ..... 220
3.5.4.3.3.1 Retrieve Connected Devices Presence Information Requirements ..... 220
3.5.4.3.3.1.1 Retrieve Actuation Report (ASC) ..... 220
3.5.4.3.3.1.2 Retrieve Detection Report (ASC) ..... 220
3.5.4.3.3.2 Provide Connected Devices Presence Information Requirements [Deprecated] ..... 220
3.5.4.3.3.2.1 Provide Actuation Report [Deprecated] ..... 220
3.5.4.3.3.2.2 Provide Detection Report [Deprecated] ..... 220
3.5.4.3.4 Exchange Roadway Geometry Plan Information Requirements ..... 220
3.5.4.3.4.1 Retrieve Roadway Geometry Plan Requirements ..... 220
3.5.4.3.4.1.1 Retrieve MAP Plan in Effect ..... 221
3.5.4.3.4.2 Provide Roadway Geometry Plan Requirements [Deprecated] ..... 221
3.5.4.3.4.2.1 Provide MAP Plan in Effect [Deprecated] ..... 221
3.5.4.3.4.3 Confirm MAP Plan Compatibility ..... 221
3.5.5 Backward Compatibility Requirements ..... 221
3.5.5.1 NTCIP 1202 v01—Configure Special Function State ..... 221
3.6 Supplemental Non-Communications Requirements ..... 221
3.6.1 Response Time for Requests ..... 221
3.6.2 Condition-Based Maximum Transmission Start Time ..... 221
3.6.3 Signal Phase and Timing Data Performance Requirements ..... 222
3.6.3.1 SPaT Maximum Transmission Start Time ..... 222
3.6.3.2 Movement Time Point Minimum Transmission Rate ..... 222
3.6.3.3 SPaT-data Request Transmission Rate [Deprecated] ..... 222
3.6.3.4 Condition-Based SPaT Maximum Transmission Start Time [Deprecated] ..... 222
3.6.3.5 SPaT Latency [Deprecated] ..... 222
3.6.3.6 SPaT Maximum Transmission Rate ..... 223
3.6.3.7 SPaT Time Accuracy ..... 223

**Section 4 Dialogs [Normative] ..... 224**

4.1 Tutorial [Informative] ..... 225
4.2 Specified Dialogs ..... 226
4.2.1 Get Block Data ..... 226
4.2.2 Set Complex Configuration Parameters (called 'P2' Objects) ..... 227
4.2.3 Set Block Data ..... 229
4.2.4 Setup, Programming, and Processing of I/O Mapping ..... 230
4.2.5 Making an I/O Map Active ..... 231
4.2.6 Configure Speed Limits for a Node Point [Deprecated] ..... 231
4.2.7 Enable Collection of Connected Data [Deprecated] ..... 231
4.2.8 Retrieve Connected Device Detector Zone—Geographic [Deprecated] ..... 232
4.2.9 Configure Enabled Lanes [Deprecated] ..... 233
4.2.10 Provide Detection Reports to an ASC ..... 233
4.2.11 Activating a MAP Plan [Deprecated] ..... 233
4.2.12 Confirm MAP Compatibility ..... 234
4.2.13 Configure Enabled Lanes V2 ..... 234
4.3 State-Transition Diagrams ..... 235

© 2023 AASHTO / ITE / NEMA Do Not Copy Without Written Permission

4.3.1 Data Parameter Types ..... 235
4.3.2 Consistency Checks ..... 236
4.3.2.1 Consistency Check Rules ..... 236
4.3.3 Non-Sequential Time Change ..... 240
4.4 Class Diagrams ..... 241
4.5 Object Types ..... 241

**Section 5 Management Information Base (MIB) [Normative] ..... 242**

5.1 MIB Header ..... 242
5.2 Phase Parameters ..... 243
5.2.1 Maximum Phases ..... 243
5.2.2 Phase Table ..... 243
5.2.2.1 Phase Number ..... 244
5.2.2.2 Phase Walk Parameter ..... 244
5.2.2.3 Phase Pedestrian Clear Parameter ..... 245
5.2.2.4 Phase Minimum Green Parameter ..... 245
5.2.2.5 Phase Passage Parameter ..... 245
5.2.2.6 Phase Maximum Green 1 Parameter ..... 246
5.2.2.7 Phase Maximum Green 2 Parameter ..... 246
5.2.2.8 Phase Yellow Change Parameter ..... 246
5.2.2.9 Phase Red Clear Parameter ..... 247
5.2.2.10 Phase Red Revert ..... 247
5.2.2.11 Phase Added Initial Parameter ..... 247
5.2.2.12 Phase Maximum Initial Parameter ..... 248
5.2.2.13 Phase Time Before Reduction Parameter ..... 248
5.2.2.14 Phase Cars Before Reduction Parameter ..... 248
5.2.2.15 Phase Time To Reduce Parameter ..... 249
5.2.2.16 Phase Reduce By ..... 249
5.2.2.17 Phase Minimum Gap Parameter ..... 249
5.2.2.18 Phase Dynamic Max Limit ..... 250
5.2.2.19 Phase Dynamic Max Step ..... 250
5.2.2.20 Phase Startup ..... 251
5.2.2.21 Phase Options ..... 251
5.2.2.22 Phase Ring Parameter ..... 253
5.2.2.23 Phase Concurrency ..... 253
5.2.2.24 Phase Maximum Green 3 Parameter ..... 253
5.2.2.25 Phase Yellow and Red Change Time Before End of Ped Clearance Parameter ..... 254
5.2.2.26 Pedestrian Phase Walk Recycle Parameter ..... 254
5.2.2.27 Pedestrian Phase Dont Walk Revert Parameter ..... 254
5.2.2.28 Phase Alternate Pedestrian Clearance Time Parameter ..... 254
5.2.2.29 Phase Alternate Pedestrian Walk Time Parameter ..... 255
5.2.2.30 Phase Pedestrian Advance Walk Time Parameter ..... 255
5.2.2.31 Phase Pedestrian Delay Walk Time Parameter ..... 255
5.2.2.32 Phase Advanced Green Indication Start Time Parameter ..... 256
5.2.2.33 Phase Advanced Red Indication Start Time Parameter ..... 256
5.2.2.34 Phase Alternate Minimum Green Time During Transitions ..... 256
5.2.3 Maximum Phase Groups ..... 257
5.2.4 Phase Status Group Table ..... 257
5.2.4.1 Phase Status Group Number ..... 258
5.2.4.2 Phase Status Group Reds ..... 258
5.2.4.3 Phase Status Group Yellows ..... 258
5.2.4.4 Phase Status Group Greens ..... 259
5.2.4.5 Phase Status Group Dont Walks ..... 259
5.2.4.6 Phase Status Group Pedestrian Clears ..... 259
5.2.4.7 Phase Status Group Walks ..... 260

 © 2023 AASHTO / ITE / NEMA

5.2.4.8 Phase Status Group Vehicle Calls ..... 260
5.2.4.9 Phase Status Group Pedestrian Calls ..... 261
5.2.4.10 Phase Status Group Phase Ons ..... 261
5.2.4.11 Phase Status Group Phase Nexts ..... 261
5.2.5 Phase Control Table ..... 262
5.2.5.1 Phase Control Group Number ..... 262
5.2.5.2 Phase Omit Control ..... 263
5.2.5.3 Pedestrian Omit Control ..... 263
5.2.5.4 Phase Hold Control ..... 264
5.2.5.5 Phase Force Off Control ..... 264
5.2.5.6 Vehicle Call Control ..... 265
5.2.5.7 Pedestrian Call Control ..... 265
5.3 Detector Parameters ..... 266
5.3.1 Maximum Vehicle Detectors ..... 266
5.3.2 Vehicle Detector Parameter Table ..... 266
5.3.2.1 Vehicle Detector Number ..... 267
5.3.2.2 Vehicle Detector Options Parameter ..... 267
5.3.2.3 Vehicle Detector Call Phase Parameter ..... 268
5.3.2.4 Vehicle Detector Switch Phase Parameter ..... 268
5.3.2.5 Vehicle Detector Delay Parameter ..... 268
5.3.2.6 Vehicle Detector Extend Parameter ..... 269
5.3.2.7 Vehicle Detector Queue Limit ..... 269
5.3.2.8 Vehicle Detector No Activity Parameter ..... 269
5.3.2.9 Vehicle Detector Maximum Presence Parameter ..... 270
5.3.2.10 Vehicle Detector Erratic Counts Parameter ..... 270
5.3.2.11 Vehicle Detector Fail Time Parameter ..... 270
5.3.2.12 Vehicle Detector Alarms ..... 271
5.3.2.13 Vehicle Detector Reported Alarms ..... 271
5.3.2.14 Vehicle Detector Reset ..... 272
5.3.2.15 Vehicle Detector Options 2 ..... 272
5.3.2.16 Vehicle Detector Paired Detector ..... 273
5.3.2.17 Vehicle Detector Paired Detector Spacing ..... 273
5.3.2.18 Vehicle Detector Average Vehicle Length ..... 273
5.3.2.19 Vehicle Detector Length Parameter ..... 273
5.3.2.20 Vehicle Detector Travel Mode ..... 274
5.3.3 Maximum Vehicle Detector Status Groups ..... 274
5.3.4 Vehicle Detector Status Group Table ..... 274
5.3.4.1 Detector Status Group Number ..... 275
5.3.4.2 Detector Status Group Active ..... 275
5.3.4.3 Detector Alarm Status ..... 276
5.3.5 Volume / Occupancy Report ..... 276
5.3.5.1 Volume / Occupancy Sequence ..... 276
5.3.5.2 Volume / Occupancy Period ..... 276
5.3.5.3 Active Volume / Occupancy Detectors ..... 277
5.3.5.4 Volume / Occupancy Table ..... 277
5.3.5.4.1 Volume Data ..... 278
5.3.5.4.2 Occupancy Data ..... 278
5.3.5.4.3 Speed Data ..... 279
5.3.5.5 Volume / Occupancy Period—Version 3 ..... 279
5.3.5.6 Volume / Occupancy Sample Time ..... 280
5.3.5.7 Volume / Occupancy Sample Duration ..... 280
5.3.6 Maximum Pedestrian Detectors ..... 280
5.3.7 Pedestrian Detector Parameter Table ..... 280
5.3.7.1 Pedestrian Detector Number ..... 281
5.3.7.2 Pedestrian Detector Call Phase Parameter ..... 281
5.3.7.3 Pedestrian Detector No Activity Parameter ..... 281

© 2023 AASHTO / ITE / NEMA Do Not Copy Without Written Permission

5.3.7.4 Pedestrian Detector Maximum Presence Parameter ..... 282
5.3.7.5 Pedestrian Detector Erratic Counts Parameter ..... 282
5.3.7.6 Pedestrian Detector Alarms ..... 282
5.3.7.7 Pedestrian Detector Reset ..... 283
5.3.7.8 Pedestrian Pushbutton Duration Parameter ..... 283
5.3.7.9 Pedestrian Detector Options ..... 284
5.3.8 Maximum Pedestrian Detector Groups ..... 284
5.3.9 Pedestrian Detector Status Group Table ..... 284
5.3.9.1 Pedestrian Detector Status Group Number ..... 285
5.3.9.2 Pedestrian Detector Status Group Active ..... 285
5.3.9.3 Pedestrian Detector Alarm Status ..... 286
5.3.10 Pedestrian Detector Report ..... 286
5.3.10.1 Pedestrian Sample Sequence ..... 286
5.3.10.2 Pedestrian Sample Period ..... 286
5.3.10.3 Active Pedestrian Sample Detectors ..... 287
5.3.10.4 Pedestrian Sample Table ..... 287
5.3.10.4.1 Pedestrian Sample Volume ..... 288
5.3.10.4.2 Pedestrian Sample Actuations ..... 288
5.3.10.4.3 Pedestrian Sample Services ..... 289
5.3.10.5 Pedestrian Volume / Actuation Sample Time ..... 289
5.3.10.6 Pedestrian Volume / Actuation Sample Duration ..... 289
5.3.11 Maximum Vehicle Detector Control Groups ..... 290
5.3.11.1 Vehicle Detector Control Group Table ..... 290
5.3.11.2 Vehicle Detector Control Group Number ..... 290
5.3.11.3 Vehicle Detector Control Group Actuation ..... 291
5.3.12 Pedestrian Detector Control Group Table ..... 291
5.3.12.1 Pedestrian Detector Control Group Number ..... 292
5.3.12.2 Pedestrian Detector Control Group Actuation ..... 292
5.4 Unit Parameters ..... 292
5.4.1 Startup Flash Parameter ..... 293
5.4.2 Automatic Ped Clear Parameter ..... 293
5.4.3 Backup Time Parameter ..... 293
5.4.4 Unit Red Revert Parameter ..... 294
5.4.5 Unit Control Status ..... 294
5.4.6 Unit Flash Status ..... 295
5.4.7 Unit Alarm Status 2 ..... 295
5.4.8 Unit Alarm Status 1 ..... 296
5.4.9 Short Alarm Status ..... 297
5.4.10 Unit Control ..... 297
5.4.11 Maximum Alarm Groups ..... 298
5.4.12 Alarm Group Table ..... 298
5.4.12.1 Alarm Group Number ..... 299
5.4.12.2 Alarm Group State ..... 299
5.4.13 Maximum Special Function Outputs ..... 300
5.4.14 Special Function Output Table ..... 300
5.4.14.1 Special Function Output Number ..... 300
5.4.14.2 Special Function Output State ..... 301
5.4.14.3 Special Function Output Control ..... 301
5.4.14.4 Special Function Output Status ..... 301
5.4.15 Remote Manual Control Timer ..... 301
5.4.16 Remote Manual Control Advance Command ..... 302
5.4.17 ASC Elevation—Antenna Offset ..... 302
5.4.18 Startup Flash Mode ..... 302
5.4.19 Backup Timer Parameter—User Defined ..... 303
5.4.20 Maximum Number of User Definable OIDs for Backup Timer ..... 303
5.4.21 Backup Time—User Defined Functions Table ..... 303

 © 2023 AASHTO / ITE / NEMA

5.4.21.1 Backup Time—User Defined Number ..... 304
5.4.21.2 Backup Time—User Defined OID ..... 304
5.4.21.3 Backup Time—User Defined Content Description ..... 304
5.4.22 ASC Clock ..... 305
5.4.22.1 Maximum Number of Time Sources ..... 305
5.4.22.2 Unit Time Source Table ..... 305
5.4.22.2.1 Unit Time Source Index ..... 306
5.4.22.2.2 Unit Time Source ..... 306
5.4.22.3 ASC Clock Source—Commanded ..... 306
5.4.22.4 ASC Clock Source—Current ..... 307
5.4.22.5 Unit Time Source Status ..... 308
5.4.22.6 ASC Clock Non-Sequential Time Source ..... 308
5.4.22.7 ASC Clock Non-Sequential Time Change ..... 309
5.4.22.8 ASC Clock Non-Sequential Time Difference ..... 309
5.4.23 Communications ..... 310
5.4.23.1 Maximum Communications Ports ..... 310
5.4.23.2 Communications Ports Table ..... 310
5.4.23.2.1 Communications Port Type ..... 311
5.4.23.2.2 Communications Port Type Number Parameter ..... 311
5.4.23.2.3 Communications Port Enable ..... 311
5.4.23.2.4 Communications Port Protocol Supported ..... 312
5.4.23.2.5 Communications Port Protocol ..... 312
5.4.23.2.6 Communications Port Diagnostics ..... 312
5.4.23.3 Maximum Ethernet Ports ..... 313
5.4.23.4 Ethernet Port Configuration Table ..... 313
5.4.23.4.1 IP Address Parameter ..... 314
5.4.23.4.2 Net Mask Parameter ..... 314
5.4.23.4.3 Gateway Parameter ..... 314
5.4.23.4.4 Domain Name Server Parameter ..... 315
5.4.23.4.5 Ethernet Configuration Mode Parameter ..... 315
5.4.23.4.6 DHCP Logical Name Parameter ..... 315
5.4.23.4.7 Static IP Address Parameter ..... 315
5.4.23.4.8 Static Net Mask Parameter ..... 316
5.4.23.4.9 Static Gateway Parameter ..... 316
5.4.23.4.10 Static Domain Name Server Parameter ..... 316
5.4.23.5 Ethernet Communications Ports ..... 316
5.4.23.6 Asynchronous RS-232 Communications Ports ..... 317
5.4.23.7 Synchronous RS-232 Communications Ports ..... 317
5.4.23.8 Port 1 Timeout Fault ..... 317
5.4.23.9 Serial Bus 1 Fault ..... 317
5.4.24 Maximum Number of OIDs for Global Set ID Parameter ..... 318
5.4.25 Global Set ID Parameter Definition Table ..... 318
5.4.25.1 Global Set ID Number ..... 319
5.4.25.2 Global Set ID Object Identifier ..... 319
5.4.26 Unit Alarm Status 3 ..... 319
5.4.27 Unit Alarm Status 4 ..... 320
5.5 Coordination Parameters ..... 320
5.5.1 Coord Operational Mode Parameter ..... 320
5.5.2 Coord Correction Mode Parameters ..... 321
5.5.3 Coord Maximum Mode Parameter ..... 321
5.5.4 Coord Force Mode Parameter ..... 322
5.5.5 Maximum Patterns Parameter ..... 322
5.5.6 Pattern Table Type ..... 322
5.5.7 Pattern Table ..... 323
5.5.7.1 Pattern Number Entry ..... 324
5.5.7.2 Pattern Cycle Time ..... 324

© 2023 AASHTO / ITE / NEMA Do Not Copy Without Written Permission

5.5.7.3 Pattern Offset Time Parameter ..... 324
5.5.7.4 Pattern Split Number Parameter ..... 325
5.5.7.5 Pattern Sequence Number Parameter ..... 325
5.5.7.6 Pattern Coordination Sync Point ..... 325
5.5.7.7 Pattern Options ..... 326
5.5.7.8 Pattern Enabled Lanes ..... 326
5.5.8 Maximum Splits ..... 327
5.5.9 Split Table ..... 327
5.5.9.1 Split Number ..... 327
5.5.9.2 Split Phase Number ..... 328
5.5.9.3 Split Time Parameter ..... 328
5.5.9.4 Split Mode Parameter ..... 329
5.5.9.5 Split Coordinated Phase ..... 329
5.5.9.6 Split Options ..... 329
5.5.10 Coordination Pattern Status ..... 330
5.5.11 Local Free Status ..... 330
5.5.12 Coordination Cycle Status ..... 331
5.5.13 Coordination Sync Status ..... 331
5.5.14 System Pattern Control ..... 332
5.5.15 System Sync Control ..... 332
5.5.16 Unit Coordination Sync Point ..... 332
5.6 Time Base Parameters ..... 333
5.6.1 Time Base Pattern Sync Parameter ..... 333
5.6.2 Maximum Time Base Actions ..... 333
5.6.3 Time Base Asc Action Table ..... 334
5.6.3.1 Time Base Action Number ..... 334
5.6.3.2 Time Base Action Pattern Parameter ..... 335
5.6.3.3 Time Base Action Auxiliary Function Parameter ..... 335
5.6.3.4 Time Base Action Special Function Parameter ..... 335
5.6.3.5 Time Base Action Enabled Lane ..... 336
5.6.4 Time Base Asc Action Status ..... 336
5.6.5 Action Plan Command ..... 336
5.7 Preempt Parameters ..... 337
5.7.1 Maximum Preempts ..... 337
5.7.2 Preempt Table ..... 337
5.7.2.1 Preempt Number ..... 338
5.7.2.2 Preempt Control Parameter ..... 338
5.7.2.3 Preempt Link Parameter ..... 339
5.7.2.4 Preempt Delay Parameter ..... 340
5.7.2.5 Preempt Duration Parameter ..... 340
5.7.2.6 Preempt Minimum Green Parameter ..... 340
5.7.2.7 Preempt Minimum Walk Parameter ..... 341
5.7.2.8 Preempt Enter Pedestrian Clear Parameter ..... 341
5.7.2.9 Preempt Track Green Parameter ..... 341
5.7.2.10 Preempt Minimum Dwell Parameter ..... 341
5.7.2.11 Preempt Maximum Presence Parameter ..... 342
5.7.2.12 Preempt Track Phase Parameter ..... 342
5.7.2.13 Preempt Dwell Phase Parameter ..... 342
5.7.2.14 Preempt Dwell Ped Parameter ..... 343
5.7.2.15 Preempt Exit Phase Parameter ..... 343
5.7.2.16 Preempt State ..... 343
5.7.2.17 Preempt Track Overlap Parameter ..... 344
5.7.2.18 Preempt Dwell Overlap Parameter ..... 344
5.7.2.19 Preempt Cycling Phase Parameter ..... 345
5.7.2.20 Preempt Cycling Ped Parameter ..... 345

 © 2023 AASHTO / ITE / NEMA

5.7.2.21 Preempt Cycling Overlap Parameter ..... 345
5.7.2.22 Preempt Enter Yellow Change Parameter ..... 345
5.7.2.23 Preempt Enter Red Clear Parameter ..... 346
5.7.2.24 Preempt Track Yellow Change Parameter ..... 346
5.7.2.25 Preempt Track Red Clear Parameter ..... 346
5.7.2.26 Preempt Sequence Number ..... 347
5.7.2.27 Preempt Exit Type ..... 347
5.7.3 Preempt Control Table ..... 347
5.7.3.1 Preempt Control Number ..... 348
5.7.3.2 Preempt Control State ..... 348
5.7.4 Preempt Status ..... 349
5.7.5 Maximum Preempt Groups ..... 349
5.7.6 Preempt Status Table ..... 349
5.7.6.1 Preempt Status Group Number ..... 349
5.7.6.2 Preempt Status Group ..... 350
5.7.7 Preempt Queue Delay Table ..... 350
5.7.7.1 Preempt Detector Weight ..... 351
5.7.8 Maximum Preemption Gates ..... 351
5.7.9 Preempt Gate Table ..... 351
5.7.9.1 Preempt Gate Number ..... 352
5.7.9.2 Preempt Gate Status ..... 352
5.7.9.3 Preempt Gate Description ..... 352
5.8 Ring Parameters ..... 352
5.8.1 Maximum Rings ..... 353
5.8.2 Maximum Sequences ..... 353
5.8.3 Sequence Table ..... 353
5.8.3.1 Sequence Number ..... 354
5.8.3.2 Sequence Ring Number ..... 354
5.8.3.3 Sequence Data ..... 354
5.8.4 Maximum Ring Control Groups ..... 354
5.8.5 Ring Control Group Table ..... 355
5.8.5.1 Ring Control Group Number ..... 355
5.8.5.2 Ring Stop Time Control ..... 355
5.8.5.3 Ring Force Off Control ..... 356
5.8.5.4 Ring Max 2 Control ..... 356
5.8.5.5 Ring Max Inhibit Control ..... 357
5.8.5.6 Ring Ped Recycle Control ..... 357
5.8.5.7 Ring Red Rest Control ..... 358
5.8.5.8 Ring Omit Red Control ..... 358
5.8.5.9 Ring Max 3 Control ..... 359
5.8.6 Ring Status Table ..... 359
5.8.6.1 Ring Status ..... 360
5.9 Channel Parameters ..... 361
5.9.1 Maximum Channels ..... 361
5.9.2 Channel Table ..... 361
5.9.2.1 Channel Number ..... 361
5.9.2.2 Channel Control Source Parameter ..... 362
5.9.2.3 Channel Control Type Parameter ..... 362
5.9.2.4 Channel Flash Parameter ..... 363
5.9.2.5 Channel Dim Parameter ..... 363
5.9.2.6 Channel Movement Type ..... 364
5.9.2.7 Channel Included Movements ..... 364
5.9.2.8 Channel Intersection Identifier ..... 365
5.9.3 Maximum Channel Status Groups ..... 365
5.9.4 Channel Status Group Table ..... 365

© 2023 AASHTO / ITE / NEMA Do Not Copy Without Written Permission

5.9.4.1 Channel Status Group Number ..... 366
5.9.4.2 Channel Status Group Reds ..... 366
5.9.4.3 Channel Status Group Yellows ..... 367
5.9.4.4 Channel Status Group Greens ..... 367
5.10 Overlap Parameters ..... 367
5.10.1 Maximum Overlaps ..... 367
5.10.2 Overlap Table ..... 368
5.10.2.1 Overlap Number ..... 368
5.10.2.2 Overlap Type ..... 369
5.10.2.3 Overlap Included Phase Parameter ..... 372
5.10.2.4 Overlap Modifier Phase Parameter ..... 372
5.10.2.5 Overlap Trailing Green Parameter ..... 372
5.10.2.6 Overlap Trailing Yellow Change Parameter ..... 373
5.10.2.7 Overlap Trailing Red Clear Parameter ..... 373
5.10.2.8 Overlap Walk Parameter ..... 373
5.10.2.9 Overlap Pedestrian Clearance Parameter ..... 374
5.10.2.10 Overlap Conflicting Pedestrian Phase Parameter ..... 374
5.10.3 Maximum Overlap Status Groups ..... 374
5.10.4 Overlap Status Group Table ..... 375
5.10.4.1 Overlap Status Group Number ..... 375
5.10.4.2 Overlap Status Group Reds ..... 375
5.10.4.3 Overlap Status Group Yellows ..... 376
5.10.4.4 Overlap Status Group Greens ..... 376
5.11 TS2 Port 1 Parameters ..... 377
5.11.1 Maximum Port 1 Addresses ..... 377
5.11.2 Port 1 Table ..... 377
5.11.2.1 Port 1 Number ..... 377
5.11.2.2 Port 1 Device Present ..... 378
5.11.2.3 Port 1 Frame 40 Enable ..... 378
5.11.2.4 Port 1 Status ..... 378
5.11.2.5 Port 1 Fault Frame ..... 379
5.12 ASC Block Objects ..... 379
5.12.1 ASC Block Get Control ..... 379
5.12.2 ASC Block Data ..... 380
5.12.3 ASC Block Error Status ..... 381
5.13 Cabinet Parameters ..... 381
5.13.1 Maximum Cabinet Environmental Monitoring Devices ..... 382
5.13.2 Cabinet Environmental Devices Table ..... 382
5.13.2.1 Cabinet Environmental Monitoring Device Number ..... 382
5.13.2.2 Cabinet Environmental Monitoring Sensor Type ..... 383
5.13.2.3 Cabinet Environmental Monitoring Device Index ..... 383
5.13.2.4 Cabinet Environmental Monitoring Device Description ..... 383
5.13.2.5 Cabinet Environmental Monitoring Device On Status ..... 384
5.13.2.6 Cabinet Environmental Monitoring Device Error Status ..... 384
5.13.3 Maximum Number of Cabinet Temperature Sensors ..... 384
5.13.4 Cabinet Temperature Sensor Status Table ..... 384
5.13.4.1 Cabinet Temperature Sensor Index ..... 385
5.13.4.2 Cabinet Temperature Sensor Description ..... 385
5.13.4.3 Cabinet Temperature Sensor Current Reading ..... 385
5.13.4.4 Cabinet Temperature Sensor High Warning Temperature ..... 386
5.13.4.5 Cabinet Temperature Sensor Low Warning Temperature ..... 386
5.13.4.6 Cabinet Temperature Sensor Status ..... 386
5.13.5 Maximum Number of Humidity Sensors ..... 387
5.13.6 Cabinet Humidity Sensor Status Table ..... 387
5.13.6.1 Cabinet Humidity Sensor Index ..... 387

 © 2023 AASHTO / ITE / NEMA

5.13.6.2 Cabinet Humidity Sensor Description ..... 387
5.13.6.3 Cabinet Humidity Sensor Current Reading ..... 388
5.13.6.4 Cabinet Humidity Sensor Threshold ..... 388
5.13.6.5 Cabinet Humidity Sensor Status ..... 388
5.13.7 Power Source ..... 389
5.13.8 Line Volts ..... 389
5.13.9 ATC Cabinet LED Displays ..... 390
5.14 I/O Mapping ..... 390
5.14.1 I/O Mapping Control ..... 390
5.14.1.1 Maximum Number of I/O Maps ..... 390
5.14.1.2 Active I/O Map ..... 390
5.14.1.3 Conditions for Activating New I/O Map ..... 391
5.14.2 I/O Maps Maximum Inputs ..... 391
5.14.3 I/O Maps Maximum Outputs ..... 391
5.14.4 I/O Input Map Table ..... 392
5.14.4.1 I/O Map Number ..... 392
5.14.4.2 I/O Input Map Index ..... 393
5.14.4.3 I/O Input Map Device Type ..... 393
5.14.4.4 I/O Input Map Custom Device Manufacturer ID ..... 393
5.14.4.5 I/O Input Map Custom Device Type ..... 394
5.14.4.6 I/O Input Map Device Address ..... 394
5.14.4.7 I/O Input Map Device Pin ..... 395
5.14.4.8 I/O Input Map Function Type ..... 395
5.14.4.9 I/O Input Map Custom Function Type ..... 395
5.14.4.10 I/O Input Map Function ..... 396
5.14.4.11 I/O Input Map Function Index ..... 396
5.14.5 I/O Input Map Status Table ..... 396
5.14.5.1 I/O Input Map Device Pin Description ..... 397
5.14.5.2 I/O Input Map Device Pin Status ..... 397
5.14.6 I/O Output Map Table ..... 397
5.14.6.1 I/O Output Map Index ..... 398
5.14.6.2 I/O Output Map Device Type ..... 398
5.14.6.3 I/O Output Map Custom Device Manufacturer ..... 399
5.14.6.4 I/O Output Map Custom Device Type ..... 399
5.14.6.5 I/O Output Map Device Address ..... 399
5.14.6.6 I/O Output Map Device Pin ..... 400
5.14.6.7 I/O Output Map Function Type ..... 400
5.14.6.8 I/O Output Map Custom Function Type ..... 401
5.14.6.9 I/O Output Map Function ..... 401
5.14.6.10 I/O Output Map Function Index ..... 401
5.14.7 I/O Output Map Status Table ..... 401
5.14.7.1 I/O Output Map Device Pin Description ..... 402
5.14.7.2 I/O Output Map Device Pin Status ..... 402
5.14.8 I/O Map Description Table ..... 402
5.14.8.1 I/O Map Description ..... 403
5.14.9 I/O Map Input Functions ..... 403
5.14.9.1 I/O Map Maximum Input Functions ..... 404
5.14.9.2 I/O Map Input Functions Table ..... 405
5.14.9.2.1 I/O Map Input Functions Table Index ..... 405
5.14.9.2.2 I/O Map Input Function Maximum Index ..... 405
5.14.9.2.3 I/O Map Input Function Name ..... 406
5.14.10 I/O Map Output Functions ..... 406
5.14.10.1 I/O Map Maximum Output Functions ..... 407
5.14.10.2 I/O Map Output Functions Table ..... 407
5.14.10.2.1 I/O Map Output Functions Table Index ..... 407
5.14.10.2.2 I/O Map Output Function Maximum Index ..... 408

© 2023 AASHTO / ITE / NEMA Do Not Copy Without Written Permission

5.14.10.2.3 I/O Map Output Function Name ..... 408
5.14.11 I/O Map FIO Pins ..... 408
5.14.11.1 I/O Map FIO Input Pins ..... 408
5.14.11.2 I/O Map FIO Output Pins ..... 409
5.14.12 I/O Map TS1 Pins ..... 411
5.14.12.1 I/O Map TS1 Input Pins ..... 411
5.14.12.2 I/O Map TS1 Output Pins ..... 413
5.14.13 I/O Map TS2 BIU Pins ..... 415
5.14.13.1 I/O Map TS2 BIU Input Pins ..... 415
5.14.13.2 I/O Map TS2 BIU Output Pins ..... 416
5.14.14 I/O Map ATS Cabinet SIU Pins ..... 416
5.14.14.1 I/O Map ATS Cabinet SIU Input Pins ..... 416
5.14.14.2 I/O Map ATS Cabinet SIU Output Pins ..... 418
5.14.15 I/O Map Auxiliary Device Pins ..... 419
5.14.15.1 I/O Map Auxiliary Device Input Pins ..... 419
5.14.15.2 I/O Map Auxiliary Device Outputs ..... 419
5.15 SIU Port 1 Parameters ..... 419
5.15.1 Maximum SIU Port 1 Addresses ..... 419
5.15.2 SIU Port 1 Table ..... 419
5.15.2.1 SIU Port 1 Number ..... 420
5.15.2.2 SIU Port 1 Device Present ..... 420
5.15.2.3 SIU Port 1 Status ..... 421
5.16 RSU Interface ..... 421
5.16.1 RSU Interface Port ..... 421
5.16.2 Maximum Number of RSU Ports ..... 421
5.16.3 Logical RSU Ports Table ..... 422
5.16.3.1 RSU Port Index ..... 422
5.16.3.2 RSU Logical Name Translation Entry Pointer ..... 422
5.16.3.3 RSU Port Name ..... 423
5.16.3.4 RSU Interface Polling Period ..... 423
5.16.3.5 RSU Port Watchdog Time ..... 423
5.16.3.6 RSU Port Watchdog Timer ..... 424
5.16.3.7 RSU Port Number ..... 424
5.17 ASC SPaT ..... 424
5.17.1 SPaT Data Timestamp ..... 424
5.17.2 SPaT Enabled Lanes Command ..... 425
5.17.3 SPaT Enabled Lanes Concurrency Table ..... 425
5.17.3.1 Enabled Lane Index ..... 426
5.17.3.2 Enabled Lane Concurrency ..... 426
5.17.4 SPaT Message Options ..... 426
5.17.5 SPaT RSU Ports Table ..... 427
5.17.5.1 SPaT Port Options ..... 427
5.17.5.2 SPaT Port Status ..... 427
5.17.5.3 SPaT Port MAP Activation Code ..... 428
5.17.6 Current Tick Counter ..... 428
5.17.7 Current Tick Counter—Milliseconds ..... 429
5.17.8 Current Tick Counter V2 ..... 429
5.17.9 Maximum Signal Groups ..... 430
5.17.10 Signal Group Entry Table ..... 430
5.17.10.1 Signal Group Entry Number ..... 430
5.17.10.2 Signal Group Intersection ..... 431
5.17.10.3 Signal Group Identifier ..... 431
5.17.10.4 Signal Group Control Source Parameter ..... 431
5.17.10.5 Signal Group Control Type ..... 432
5.17.10.6 Signal Group Green Type ..... 432

 © 2023 AASHTO / ITE / NEMA

5.17.10.7 Signal Group Red Type ..... 433
5.17.10.8 Permissive Signal Group Control Source Parameter ..... 433
5.17.10.9 Permissive Signal Group Control Type ..... 434
5.17.10.10 Signal Group Enabled Lane ..... 434
5.17.11 Maximum Agency Signal State Entries ..... 435
5.17.12 Agency Signal State Table ..... 435
5.17.12.1 Agency Signal State Entry Number ..... 435
5.17.12.2 Agency Signal State Color ..... 436
5.17.12.3 Agency Signal State Control Type ..... 436
5.17.12.4 Additional Parameters for Determining Signal State ..... 437
5.17.12.5 Signal State Indication ..... 438
5.17.13 Maximum Enabled Lanes Concurrency Entries ..... 439
5.17.14 SPaT Enabled Lanes Command 2 ..... 439
5.18 RSU - ASC Support ..... 439
5.18.1 RSU Signal Phase and Timing Functions ..... 440
5.18.1.1 Maximum Number of ASCs Supported ..... 440
5.18.1.2 SPaT ASC Table ..... 440
5.18.1.2.1 SPaT ASC Index ..... 441
5.18.1.2.2 SPaT ASC Intersection Identifier ..... 441
5.18.1.2.3 SPaT ASC Message Count ..... 441
5.18.1.2.4 SPaT ASC Message Time ..... 441
5.18.1.2.5 SPaT ASC Message Time (Milliseconds) ..... 442
5.18.1.2.6 SPaT ASC Message Enabled Lanes ..... 442
5.18.1.3 SPaT Message Time ..... 442
5.18.1.4 Control Active MAP Plan ..... 443
5.18.1.5 Active MAP Plan Error ..... 443
5.18.2 Connected Detection Zone ..... 443
5.18.2.1 Connected Detection Zone Enable ..... 444
5.18.2.2 Maximum Connected Detection Zones ..... 444
5.18.2.3 Connected Detection Zone Table ..... 444
5.18.2.3.1 Connected Detection Zone Number ..... 445
5.18.2.3.2 Connected Detection Zone Options Parameter ..... 445
5.18.2.3.3 Connected Detection Intersection ..... 446
5.18.2.3.4 Connected Detection Zone Input ..... 446
5.18.2.3.5 Connected Detection Zone Assignment Parameter ..... 446
5.18.2.3.6 Connected Detection Zone Sampling Period Parameter ..... 447
5.18.2.3.7 Connected Detection Zone User Class Parameter ..... 447
5.18.2.3.8 Connected Detection Zone Heading Parameter ..... 447
5.18.2.3.9 Connected Detection Zone Minimum Speed Parameter ..... 447
5.18.2.3.10 Connected Detection Zone Maximum Speed Parameter ..... 448
5.18.2.3.11 Connected Detection Zone Minimum Vehicle Size Parameter ..... 448
5.18.2.3.12 Connected Detection Zone Maximum Vehicle Size Parameter ..... 448
5.18.2.3.13 Connected Detection Zone Flags Parameter ..... 449
5.18.2.4 Maximum Connected Detection Zone Node Points ..... 449
5.18.2.5 Connected Detection Zone Table ..... 450
5.18.2.5.1 Connected Detection Zone Node Point Index ..... 450
5.18.2.5.2 Detection Zone Node Point X ..... 450
5.18.2.5.3 Detection Zone Node Point Y ..... 451
5.18.2.5.4 Detection Zone Node Point Width ..... 451
5.18.2.5.5 Detection Zone Node Point Z ..... 451
5.18.2.5.6 Detection Zone Node Point Height ..... 452
5.18.2.6 Detection Actuations Sample Period ..... 452
5.18.2.7 Maximum Connected Detection Zone Groups ..... 452
5.18.2.8 Detection Group Table ..... 452
5.18.2.8.1 CV Detection Group Number ..... 453
5.18.2.8.2 CV Detection Group Actuations ..... 453

© 2023 AASHTO / ITE / NEMA Do Not Copy Without Written Permission

5.18.2.9 CV Detection Report Collection ..... 454
5.18.2.10 Active CV Detectors ..... 454
5.18.2.11 Detection Reports Sequence ..... 454
5.18.2.12 Connected Detection Reports Table ..... 454
5.18.2.12.1 Connected Detection Zone Report Time ..... 455
5.18.2.12.2 Connected Detection Zone Volume Data ..... 455
5.18.2.12.3 Connected Detection Zone Speed Data ..... 456
5.18.2.12.4 Connected Detection Zone Travel Time Data ..... 456
5.18.2.12.5 Connected Detection Zone Queue Data ..... 456
5.18.2.12.6 Connected Detection Zone Gap Data ..... 457
5.18.2.12.7 Connected Detection Zone Platoon Data ..... 457

**Section 6 Block Object Definitions ..... 458**

6.1 Block Data Type and ID ..... 458
6.2 Phase Block Data ..... 460
6.2.1 Phase Block Example ..... 461
6.3 Vehicle Detector Block Data ..... 461
6.3.1 Vehicle Detector Block Example ..... 462
6.4 Pedestrian Detector Block Data ..... 462
6.4.1 Pedestrian Detector Block Example ..... 463
6.5 Pattern Block Data ..... 463
6.5.1 Pattern Block Example ..... 464
6.6 Split Block Data ..... 464
6.6.1 Split Block Example ..... 465
6.7 Time Base Block Data ..... 465
6.7.1 Time Base Block Example ..... 466
6.8 Preempt Block Data ..... 466
6.8.1 Preempt Block Example ..... 467
6.9 Sequence Block Data ..... 467
6.9.1 Sequence Block Example ..... 468
6.10 Channel Block Data ..... 468
6.10.1 Channel Block Example ..... 469
6.11 Overlap Block Data ..... 469
6.11.1 Overlap Block Example ..... 470
6.12 Port 1 Block Data ..... 470
6.12.1 Port 1 Block Example ..... 471
6.13 Schedule Block Data ..... 471
6.13.1 Schedule Block Example ..... 472
6.14 Day Plan Block Data ..... 472
6.14.1 Day Plan Block Example ..... 473
6.15 Event Log Config Block Data ..... 473
6.15.1 Event Log Config Block Example ..... 474
6.16 Event Class Block Data ..... 474
6.16.1 Event Class Block Example ..... 475
6.17 Dynamic Object Config Block Data ..... 475
6.17.1 Dynamic Object Config Block Example ..... 476
6.18 Dynamic Object Owner Block Data ..... 476
6.18.1 Dynamic Object Owner Block Example ..... 477
6.19 Dynamic Object Status Block Data ..... 477
6.19.1 Dynamic Object Status Block Example ..... 477
6.20 Miscellaneous ASC Block Data ..... 478

 © 2023 AASHTO / ITE / NEMA

6.20.1 Miscellaneous ASC Block Example ..... 478
6.21 Phase 2 Block Data ..... 479
6.22 Vehicle Detector 2 Block Data ..... 479
6.23 Vehicle VOL/OCC Report V3 Block Data ..... 480
6.24 Pedestrian Detector 2 Block Data ..... 480
6.25 Pedestrian Detector Report Block Data ..... 481
6.26 Pedestrian Button Config Block Data ..... 481
6.27 Pattern 2 Block Data ..... 482
6.28 Split 2 Block Data ..... 482
6.29 Preempt 2 Block Data ..... 483
6.30 Preempt Queue Delay Block Data ..... 483
6.31 Channel 2 Block Data ..... 484
6.32 Overlap 2 Block Data ..... 484
6.33 Communications Port Definition Block Data ..... 485
6.34 Ethernet Comm Port Definition Block Data ..... 485
6.35 SIU Port 1 Block Data ..... 486
6.36 Miscellaneous 2 ASC Block Data ..... 486
6.37 User-Defined Backup Timer Definition Block Data ..... 487
6.38 ASC Location Block Data ..... 487
6.39 Global Set ID Definition Block Data ..... 487
6.40 ASC Environmental Monitoring Block Data ..... 488
6.41 ASC Cabinet Temperature Sensor Block Data ..... 488
6.42 ASC Cabinet Humidity Sensor Block Data ..... 489
6.43 ASC I/O Input Mapping Block Data ..... 489
6.44 ASC I/O Input Status Block Data ..... 490
6.45 ASC I/O Output Mapping Block Data ..... 490
6.46 ASC I/O Output Status Block Data ..... 491
6.47 ASC I/O Mapping Description Block Data ..... 492
6.48 CV Configuration ASC Block Data ..... 492
6.49 CV Logical RSU Ports Configuration Block Data ..... 492
6.50 CV SPaT Enabled Lanes Concurrency Configuration Block Data ..... 493
6.51 CV SPaT RSU Ports Configuration Block Data ..... 493
6.52 CV Detector Configuration Block Data ..... 494
6.53 CV Detection Zone Configuration ..... 494
6.54 CV Detection Report Block Data ..... 495
6.55 CV Configuration 2 ASC Block Data ..... 495
6.56 Pattern 3 Block Data ..... 495

**Section 7 SAE/NTCIP Object Definitions ..... 497**

7.1 MIB Header ..... 497
7.2 Signal Phase and Timing ..... 498
7.2.1 Intersection Status ..... 498
7.2.2 Maximum SPaT Speed Advisories ..... 498
7.2.3 SPaT Speed Advisories Table ..... 499
7.2.3.1 SPaT Speed Advisory Index ..... 499
7.2.3.2 SPaT Movement Advisory Speed Type ..... 499

© 2023 AASHTO / ITE / NEMA Do Not Copy Without Written Permission

7.2.3.3 SPaT Movement Advisory Speed Advice ..... 500
7.2.3.4 SPaT Movement Advisory Speed Zone ..... 500
7.2.3.5 SPaT Movement Advisory Speed Restriction Class ..... 500
7.2.3.6 SPaT Movement Advisory Speed Confidence ..... 501
7.2.4 Maximum SPaT Movement Maneuvers ..... 501
7.2.5 SPaT Movement Maneuvers Table ..... 501
7.2.5.1 SPaT Movement Maneuver Number ..... 502
7.2.5.2 SPaT Movement Maneuver Identifier ..... 502
7.2.5.3 SPaT Movement Maneuver State ..... 502
7.2.5.4 SPaT Movement Queue ..... 503
7.2.5.5 SPaT Movement Storage ..... 504
7.2.5.6 SPaT Movement Assist Status ..... 504
7.2.5.7 SPaT Movement Queue Detector ..... 504
7.2.5.8 SPaT Movement Pedestrian Presence ..... 505
7.2.5.9 SPaT Movement Bicycle Presence ..... 505
7.2.5.10 SPaT Movement Type ..... 505
7.2.5.11 SPaT Movement Included Movements ..... 506
7.2.6 SPaT Enabled Lanes Status ..... 507
7.2.7 SPaT Signal Status Table ..... 507
7.2.7.1 SPaT Event State ..... 507
7.2.7.2 SPaT Signal State Minimum End Time ..... 508
7.2.7.3 SPaT Signal State Maximum End Time ..... 509
7.2.7.4 SPaT Signal State Likely Time ..... 509
7.2.7.5 SPaT Signal State Time Confidence ..... 510
7.2.7.6 SPaT Signal Next Tick ..... 510
7.2.8 SPaT Signal Status Block ..... 511
7.2.9 SPaT Movement Maneuver Status Block ..... 512
7.2.10 Intersection Status V2 ..... 513
7.2.11 Maximum Movement Events ..... 514
7.2.12 SPaT Signal Status Table V2 ..... 514
7.2.12.1 Movement Event Number ..... 514
7.2.12.2 SPaT Event State ..... 515
7.2.12.3 SPaT Signal State Minimum End Time V2 ..... 515
7.2.12.4 SPaT Signal State Maximum End Time V2 ..... 516
7.2.12.5 SPaT Signal State Likely Time V2 ..... 516
7.2.12.6 SPaT Signal State Time Confidence ..... 517
7.2.12.7 SPaT Signal Next Tick V2 ..... 517
7.2.12.8 SPaT Signal Start Tick ..... 517
7.2.13 Maximum SPaT Speed Advisories ..... 518
7.2.14 SPaT Speed Advisories Table 2 ..... 518
7.2.14.1 SPaT Speed Advisory Index 2 ..... 519
7.2.14.2 SPaT Advisory Signal Group 2 ..... 519
7.2.14.3 SPaT Movement Advisory Speed Type 2 ..... 519
7.2.14.4 SPaT Movement Advisory Speed Advice 2 ..... 520
7.2.14.5 SPaT Movement Advisory Speed Zone 2 ..... 520
7.2.14.6 SPaT Movement Advisory Speed Restriction Class 2 ..... 520
7.2.15 Maximum SPaT Movement Maneuvers ..... 520
7.2.16 SPaT Movement Maneuvers Table V2 ..... 521
7.2.16.1 SPaT Movement Maneuver Number V2 ..... 521
7.2.16.2 SPaT Movement Maneuver Signal Group ..... 522
7.2.16.3 SPaT Movement Queue V2 ..... 522
7.2.16.4 SPaT Movement Assist Status V2 ..... 522
7.2.16.5 SPaT Movement Queue Detector V2 ..... 523
7.2.16.6 SPaT Movement Pedestrian Presence V2 ..... 523
7.2.16.7 SPaT Movement Bicycle Presence V2 ..... 523
7.2.17 Road Authority Identifier ..... 524

 © 2023 AASHTO / ITE / NEMA

7.2.18 SPaT Signal Status Block V2 ..... 524
7.3 MAP Data ..... 525
7.3.1 MAP Message Count ..... 525
7.3.2 MAP Message Time ..... 525
7.3.3 Maximum Number of Lanes ..... 526
7.3.4 Intersection Lane Table ..... 526
7.3.4.1 Lane Index ..... 526
7.3.4.2 Lane Intersection ..... 527
7.3.4.3 Lane Number ..... 527
7.3.4.4 Lane Name ..... 527
7.3.4.5 Lane Direction ..... 527
7.3.4.6 Lane Sharing ..... 528
7.3.4.7 Lane Type ..... 528
7.3.4.8 Lane Attribute ..... 528
7.3.4.9 Lane Maneuver ..... 529
7.3.4.10 Lane Overlay ..... 529
7.3.4.11 Lane Ingress ..... 529
7.3.4.12 Lane Egress ..... 530
7.3.4.13 MAP Lane CRC ..... 530
7.3.5 Maximum Number of Intersections ..... 531
7.3.6 MAP Intersection Table ..... 531
7.3.6.1 MAP Intersection Index ..... 531
7.3.6.2 MAP Intersection Identifier ..... 532
7.3.6.3 MAP Intersection Name ..... 532
7.3.6.4 MAP Authority Identifier ..... 532
7.3.6.5 MAP Intersection Latitude ..... 532
7.3.6.6 MAP Intersection Longitude ..... 533
7.3.6.7 MAP Intersection Elevation ..... 533
7.3.6.8 MAP Intersection Default Width ..... 533
7.3.6.9 MAP Intersection Message Count ..... 533
7.3.7 Maximum Number of Node Points ..... 534
7.3.8 Node Point Table ..... 534
7.3.8.1 Node Point Number ..... 535
7.3.8.2 Node Point X ..... 535
7.3.8.3 Node Point Y ..... 535
7.3.8.4 Node Point Attributes ..... 536
7.3.8.5 Node Point Segment Attributes ..... 536
7.3.8.6 Node Point End Angle ..... 536
7.3.8.7 Node Point Crown Point Center ..... 536
7.3.8.8 Node Point Crown Point Left Edge ..... 537
7.3.8.9 Node Point Crown Point Right Edge ..... 537
7.3.8.10 Node Point Lane Angle ..... 537
7.3.8.11 Node Point Width ..... 538
7.3.8.12 Node Point Elevation ..... 538
7.3.8.13 Node Point Speed Limits ..... 538
7.3.9 Maximum Computed Lane ..... 538
7.3.10 Intersection Computed Lane Table ..... 539
7.3.10.1 Computed Lane Reference ..... 539
7.3.10.2 Computed Lane X Offset ..... 539
7.3.10.3 Computed Lane Y Offset ..... 540
7.3.10.4 Computed Lane Angle ..... 540
7.3.10.5 Computed Lane X Scale ..... 540
7.3.10.6 Computed Lane Y Scale ..... 540
7.3.11 Maximum Lane Connections ..... 541
7.3.12 Lane Connection Table ..... 541
7.3.12.1 Lane Connect Index ..... 541

© 2023 AASHTO / ITE / NEMA Do Not Copy Without Written Permission

7.3.12.2 Lane Connect Identifier ..... 542
7.3.12.3 Lane Connect Maneuver ..... 542
7.3.12.4 Lane Connect Remote Intersection ID ..... 542
7.3.12.5 Lane Connect Authority Identifier ..... 542
7.3.12.6 Lane Connect Channel ..... 543
7.3.12.7 Lane Connect Restriction Class ..... 543
7.3.12.8 Lane Connect Maneuver Number ..... 543
7.3.13 Maximum Number of Speed Limits ..... 543
7.3.14 Intersection Speed Limit Table ..... 544
7.3.14.1 Speed Limit Index ..... 544
7.3.14.2 Speed Limit Type ..... 544
7.3.14.3 Speed Limit ..... 545
7.3.15 Maximum User Types ..... 545
7.3.16 Intersection User Types Table ..... 545
7.3.16.1 MAP User Type Index ..... 546
7.3.16.2 MAP User Class Types ..... 546
7.3.17 Maximum MAP Plans ..... 546
7.3.18 MAP Plan Table ..... 547
7.3.18.1 MAP Plan Index ..... 547
7.3.18.2 MAP Plan Lanes ..... 548
7.3.18.3 MAP Plan CRC ..... 548
7.3.18.4 MAP Plan Layer Type ..... 548
7.3.18.5 MAP Plan Layer Identifier ..... 549
7.3.18.6 MAP Plan Metadata Method ..... 549
7.3.18.7 MAP Plan Metadata Agency ..... 549
7.3.18.8 MAP Plan Metadata Date ..... 549
7.3.18.9 MAP Plan Metadata Geoid ..... 550

**Annex A Requirements Traceability Matrix (RTM) [Normative] ..... 551**

A.1 Notation [Informative] ..... 551
A.1.1 Functional Requirement Columns ..... 551
A.1.2 Dialog Column ..... 551
A.1.3 Object Columns ..... 552
A.1.4 Additional Specifications ..... 552
A.2 Instructions For Completing the RTM [Informative] ..... 552
A.3 Requirements Traceability Matrix (RTM) Table ..... 552

**Annex B Object Tree [Informative] ..... 776**

**Annex C Test Procedures [Normative] ..... 778**

**Annex D Documentation of Revisions [Informative] ..... 779**

D.1 NTCIP 1202 v02 to NTCIP 1202 v03 ..... 779
D.1.1 Added Systems Engineering Process ..... 779
D.1.2 General MIB Changes ..... 779
D.1.3 New User Needs ..... 779
D.1.3.1 Added Support for Connected Vehicle Environment ..... 780
D.1.3.2 Added Support to Manage the Cabinet Environment ..... 780
D.1.3.3 Added Support to Manage the Power Sources ..... 780
D.1.3.4 Added Support to Retrieve Operational Performance Data ..... 780
D.1.3.5 Added Support to Manage I/O Mapping ..... 780
D.1.3.6 Added Support for Accessible Pedestrian Signals (APS) ..... 780
D.1.3.7 Added Support to Activate an Action Plan ..... 780
D.1.3.8 Added Support to Manually Advance the Controller Remotely ..... 780
D.1.3.9 Added Support for Condition-Based Exception Reporting ..... 780
D.1.4 New Requirements ..... 781
D.1.4.1 Manage ASC Location ..... 781

 © 2023 AASHTO / ITE / NEMA

D.1.4.2 Manage Communications Ports ... 781
D.1.4.3 Manage ASC Clock ... 781
D.1.4.4 Manage User-Defined Backup Time ... 781
D.1.4.5 Support for Advanced Warning Signal Indications ... 781
D.1.4.6 Support for Phase Maximum 3 ... 781
D.1.4.7 Support for Bicycle Phases ... 781
D.1.4.8 Support for Transit Phases ... 781
D.1.4.9 Manage Alternate Times for Transitions ... 781
D.1.4.10 Manage Coordination Point ... 781
D.1.4.11 Support for Additional Overlaps ... 782
D.1.4.12 Manage Preempt Exit Strategy ... 782
D.1.4.13 Manage Additional Alarms ... 782
D.1.4.14 Support for Paired Detectors ... 782
D.1.4.15 Improved Support for Vehicle Detectors ... 782
D.1.4.16 Improved Support for Pedestrian Detectors ... 782
D.1.4.17 Block Objects for New NTCIP 1202 v03 Objects ... 782
D.1.5 Changes to Existing Objects ... 782
D.1.5.1 Additional Coordination Correction Mode ... 782
D.2 NTCIP 1202 v03 to NTCIP 1202 v03A ... 782
D.3 NTCIP 1202 v03A to NTCIP 1202 v03B ... 782
D.3.1 Fixes to RTM ... 783
D.3.2 Deprecated User Needs ... 783
D.3.2.1 Connected Vehicle Manager—Management Station – CV Roadside Process Interface ... 783
D.3.3 New Requirements ... 783
D.3.3.1 Support SNMP Conformance Group ... 783
D.3.3.2 Support Cabinet Flash ... 783
D.3.3.3 Support Unit Coordination Point ... 783
D.3.3.4 Support Minus Green Yellow Alternate Overlap ... 783
D.3.3.5 Support Preempt Gate Description Configuration ... 784
D.3.3.6 Configure Intersection Identifier ... 784
D.3.3.7 New SPaT Requirements to Support CTI 4501 ... 784
D.3.3.8 Security ... 784
D.3.4 Deprecated Requirements ... 784
D.3.4.1 Drop Support for Management Station – CV Roadside Process Interface ... 784
D.3.4.2 Drop Support for RSU SNMP Managers ... 784

**Annex E User Requests ... 785**

E.1 Features Not Supported by This Version ... 785
E.1.1 Interval-Based Controllers ... 785
E.1.2 Non-Persistent Timing Patterns ... 785
E.1.3 Traffic Adaptive Algorithm ... 785
E.1.4 Peer-to-Peer ... 785
E.1.5 Signal Control Priority ... 785
E.1.6 Additional Support for ADA ... 786
E.1.7 Programmable Logic Gates and Functions ... 786
E.1.8 Advanced Preempt Inputs ... 786
E.1.9 Conflict Monitoring Unit and Channel Support ... 786
E.1.10 Traffic Signal Controller Broadcast Message (TSCBM) ... 786
E.1.11 startTime [Deprecated] ... 787
E.1.12 ECLA ... 787
E.1.13 LikelyTime ... 787
E.1.14 Advisory Speed by Lane ... 787
E.1.15 Assured Green Period ... 787
E.1.16 Enabled Lanes During Preemption ... 787
E.1.17 MAP Consistency Code ... 788

© 2023 AASHTO / ITE / NEMA Do Not Copy Without Written Permission

E.1.18 Maneuver by Lane ..... 788
E.1.19 RSU Virtual Detectors ..... 788
E.1.20 Support for DTLS ..... 788
E.2 Recommendations to NTCIP 1218 Roadside Unit Working Group ..... 788
**Annex F Generic Concepts and Definitions [Informative] ..... 801**
F.1 Meaning of 'Other' as a Value ..... 801
F.2 Manufacturer-Specific Consistency Checks ..... 801
F.3 Connected Intersections ..... 801
F.3.1 Base Assumptions ..... 802
F.3.1.1 Active TOD Control ..... 802
F.3.1.2 Active Preemption Control ..... 802
F.3.1.3 Active Demand ..... 802
F.3.1.4 NTCIP 1202 v03 Configuration ..... 803
F.3.1.5 Proprietary Features ..... 804
F.3.1.6 Externally Coordinated and/or Adaptively Controlled Intersections ..... 805
F.3.1.7 Post-Processed SPaT Generation ..... 805
F.3.2 Conformance ..... 805
F.3.3 Notes and Guidance ..... 806
F.3.3.1 Disciplined Time ..... 806
F.3.3.2 SPaT and MAP Relationship ..... 806
F.3.3.3 SPaT Data Overview ..... 806
F.3.3.3.1 Example ..... 808
F.3.3.4 Intersection Status ..... 810
F.3.3.4.1 Manual Control ..... 810
F.3.3.4.2 Stop Time ..... 810
F.3.3.4.3 Failure Flash ..... 811
F.3.3.4.4 Preempt Control ..... 812
F.3.3.4.5 Priority Control ..... 812
F.3.3.4.6 Fixed Time Operation ..... 813
F.3.3.4.7 Traffic Dependent Operation ..... 813
F.3.3.4.8 Standby Operation ..... 813
F.3.3.4.9 Failure Mode ..... 814
F.3.3.4.10 Controller Off ..... 814
F.3.3.4.11 Recent MAP Message Update ..... 814
F.3.3.4.12 Recent Enabled Lanes Update ..... 815
F.3.3.4.13 No MAP Available ..... 815
F.3.3.4.14 No SPaT Available ..... 815
F.3.3.5 Movement Phase State ..... 816
F.3.3.5.1 signalGroupEntryTable ..... 816
F.3.3.5.2 agencySignalStateTable ..... 818
F.3.3.5.3 Editing agencySignalStateTable ..... 820
F.3.3.5.4 Right Turn on Red ..... 823
F.3.3.6 TimeChangeDetails ..... 828
F.3.3.6.1 Vendor-Specific Values ..... 828
F.3.3.6.2 signalStateMinEndTick2 ..... 828
F.3.3.6.3 signalStateMaxEndTick2 ..... 829
F.3.3.6.4 signalStateLikelyEndTick2 ..... 830
F.3.3.6.5 signalStateTickConfidence2 ..... 831
F.3.3.6.6 signalNextTick2 ..... 831
F.3.3.6.7 signalStateStartTick ..... 831
F.3.3.6.8 Special Traffic Control Situations ..... 832
F.3.3.7 Enabled Lanes ..... 832
F.3.3.8 Advisory Speeds ..... 833
F.3.3.9 Movement Maneuvers ..... 833

 © 2023 AASHTO / ITE / NEMA

F.3.3.10 Implementation ..... 834
F.3.3.11 Connected Device Detectors [Deprecated] ..... 834
F.3.3.12 Connected Device Data ..... 836
F.3.3.12.1 Actuations ..... 837
F.3.3.12.2 Processed Data ..... 837

**Annex G SNMP Interface [Normative] ..... 838**

G.1 Generic SNMP Get Interface ..... 838
G.2 Generic SNMP Get-Next Interface ..... 838
G.3 Generic SNMP Set Interface ..... 839
G.4 Variable Binding List Structure ..... 840
G.5 Additional Requirements ..... 840
G.5.1 Grouping of Objects in a Request ..... 840
G.5.2 Support of Get ..... 840
G.5.3 Support of Get-Next ..... 840
G.5.4 Support of Set ..... 840
G.5.5 Performance ..... 841
G.5.6 Properly Defined Objects ..... 841

**Annex H NTCIP 1201 v03- and NTCIP 1103 v03-Derived Functional Requirements and Dialogs [Normative] ..... 842**

H.1 Generic Functional Requirements ..... 842
H.1.1 Generic Configuration Requirements ..... 842
H.1.1.1 Determine Device Component Information ..... 842
H.1.1.2 Determine Device Configuration Identifier Requirements ..... 842
H.1.1.2.1 Determine Unique Deployment Configuration Identifier ..... 842
H.1.1.2.2 Determine Configuration Identifier Parameter Content ..... 843
H.1.1.3 Determine Supported Standards ..... 843
H.1.1.4 Manage Unique System Name ..... 843
H.1.1.5 Manage Time ..... 843
H.1.1.5.1 Configure Time ..... 843
H.1.1.5.2 Configure Time Zone ..... 843
H.1.1.5.3 Configure Daylight Saving Mode ..... 843
H.1.1.5.4 Determine Time Setting ..... 843
H.1.1.5.5 Determine Time Zone Setting ..... 843
H.1.1.5.6 Determine Daylight Saving Mode Setting ..... 843
H.1.1.5.7 Monitor Current Time ..... 843
H.1.1.6 Managing Auxiliary Ports Requirements ..... 844
H.1.1.6.1 Determine External Port Information ..... 844
H.1.1.6.2 Configure Port Information ..... 844
H.1.1.6.3 Required Number of Auxiliary Ports ..... 844
H.1.1.7 Manage Generic Scheduler Requirements ..... 844
H.1.1.7.1 Configure Timebased Scheduler Month-Day-Date ..... 844
H.1.1.7.2 Configure Timebased Scheduler Day Plans and Timebased Actions ..... 844
H.1.1.8 Manage Security Definitions Requirements ..... 844
H.1.1.8.1 Configure Security Definitions ..... 844
H.1.1.9 Manage Dynamic Objects Requirements ..... 845
H.1.1.9.1 Configure Dynamic Object Requirements ..... 845
H.1.1.9.1.1 Configure Dynamic Object Persistence Time ..... 845
H.1.1.9.1.2 Configure Dynamic Object Configuration ID ..... 845
H.1.1.10 Manage Exception Reporting Requirements ..... 845
H.1.1.10.1 Enable/Disable Exception Reporting ..... 845
H.1.1.10.2 Configure Exception Reporting Condition Requirements ..... 845
H.1.1.10.2.1 Configure a Monitored (Watch) Object ..... 845
H.1.1.10.2.2 Configure a Monitored Group of Objects (Watch Block) ..... 846

© 2023 AASHTO / ITE / NEMA Do Not Copy Without Written Permission

H.1.1.10.3 Configure Exception Reporting Data Transmission Requirements ..... 846
H.1.1.10.3.1 Configure a Report Object ..... 846
H.1.1.10.3.2 Configure a Report Group of Objects (Block) ..... 846
H.1.1.10.4 Configure Exception Reporting Destination ..... 846
H.1.1.10.5 Configure Exception Reporting Community ..... 846
H.1.1.10.6 Configure Exception Reporting Operational Mode Requirements ..... 846
H.1.1.10.6.1 Configure Exception Reporting Acknowledgement ..... 846
H.1.1.10.6.2 Configure Exception Reporting Aggregation ..... 847
H.1.1.10.6.3 Configure Exception Reporting Queue ..... 847
H.1.1.10.6.4 Configure Exception Reporting (Forced) ..... 847
H.1.1.10.6.5 Configure Exception Reporting Communications ..... 847
H.1.1.10.6.6 Configure Exception Reporting—Maximum Rate ..... 847
H.1.1.10.7 Determine Watch Block Capabilities ..... 847
H.1.1.10.8 Determine Report Block Capabilities ..... 847
H.1.1.10.9 Determine Exception Reporting Trap Channel Capabilities ..... 848
H.1.1.10.10 Determine Exception Reporting Aggregation Capabilities ..... 848
H.1.1.10.11 Determine Event Reporting Latency ..... 848
H.1.1.10.12 Monitor Communications Link State ..... 848
H.1.1.10.13 Monitor Exception Based Reporting Status Requirements ..... 848
H.1.1.10.13.1 Monitor Exception Based Communications Link Error ..... 848
H.1.1.10.13.2 Monitor Exception Based Maximum Rate Exceeded ..... 848
H.1.1.10.13.3 Monitor Exception Based Queue Full Error ..... 849
H.1.1.10.14 Monitor Exception Based Transmissions ..... 849
H.1.1.10.15 Monitor Number of Lost Queued Exception Based Reports ..... 849
H.1.1.10.16 Monitor Number of Exception Based Events ..... 849
H.1.1.10.17 Monitor Exception Based Data ..... 849
H.1.1.10.18 Clear Event Class ..... 849
H.1.1.10.19 Clear Event Configuration ..... 849
H.1.1.10.20 Clear Event Log Table ..... 849
H.1.1.10.21 Clear Report Objects ..... 849
H.1.1.10.22 Clear Report Blocks ..... 849
H.1.1.10.23 Clear Watch Objects ..... 849
H.1.1.10.24 Clear Watch Blocks ..... 850
H.1.1.10.25 Clear Exception Based Reporting Tables ..... 850
H.1.1.10.26 Reset a Communications Link ..... 850
H.1.1.11 Configure System Contact Information ..... 850
H.1.1.12 Monitor Other System Information ..... 850
H.1.2 Generic Status Monitoring Requirements ..... 850
H.1.2.1 Monitor Status of External Device ..... 850
H.1.2.2 Retrieve Database Management Requirements ..... 850
H.1.2.2.1 Monitor Database Operation ..... 850
H.1.2.2.2 Monitor Database Operation Status ..... 851
H.1.2.2.3 Monitor Database Operation Error Status ..... 851
H.1.2.3 Retrieve Generic Scheduler Settings Requirements ..... 851
H.1.2.3.1 Monitor Timebased Scheduler Month-Day-Date ..... 851
H.1.2.3.2 Monitor Timebased Scheduler Day Plans and Timebased Actions ..... 851
H.1.2.3.3 Monitor Active Timebased Schedule ..... 851
H.1.2.3.4 Monitor Active Timebased Schedule Day Plan and Timebased Actions ..... 851
H.1.2.4 Retrieve Security Definitions Requirements ..... 851
H.1.2.4.1 Determine Security Definitions ..... 851
H.1.2.5 Retrieve Dynamic Objects Requirements ..... 852
H.1.2.5.1 Determine Dynamic Objects Requirements ..... 852
H.1.2.5.1.1 Determine Dynamic Object Persistence Time ..... 852
H.1.2.5.1.2 Determine Dynamic Object Configuration ID ..... 852
H.1.2.5.2 Monitor STMP-Related Communications Requirements ..... 852
H.1.2.5.2.1 Monitor STMP Data Exchange Requirements ..... 852

 © 2023 AASHTO / ITE / NEMA

H.1.2.5.2.1.1 Monitor Incoming and Outgoing STMP Packet Exchanges ..... 852
H.1.2.5.2.1.2 Monitor Incoming and Outgoing STMP Packet Types ..... 852
H.1.2.5.2.2 Monitor STMP Data Exchange Error Requirements ..... 852
H.1.2.5.2.2.1 Monitor Incoming and Outgoing STMP Error Exchanges—Too Big Error ..... 853
H.1.2.5.2.2.2 Monitor Incoming and Outgoing STMP Error Exchanges—No Such Name ..... 853
H.1.2.5.2.2.3 Monitor Incoming and Outgoing STMP Error Exchanges—Bad Value ..... 853
H.1.2.5.2.2.4 Monitor Incoming and Outgoing STMP Error Exchanges—Read-Only ..... 853
H.1.2.5.2.2.5 Monitor Incoming and Outgoing STMP Error Exchanges—General Error ..... 853
H.1.3 Generic Data Retrieval Requirements ..... 853
H.1.3.1 Support Logged Data ..... 853
H.1.3.1.1 Retrieve Current Configuration of Logging Service ..... 853
H.1.3.1.2 Configure Event Logging Service ..... 853
H.1.3.1.3 Retrieve Event Logged Data ..... 853
H.1.3.1.4 Configure Clearing of Event Class Log ..... 853
H.1.3.1.5 Determine Capabilities of Event Logging Service ..... 854
H.1.3.1.6 Determine Number of Logged Events per Event Class ..... 854
H.1.3.1.7 Support a Number of Events to Store in Log ..... 854
H.1.3.1.8 Configure Clearing of Global Log ..... 854
H.1.3.1.9 Determine Total Number of Logged Events ..... 854
H.1.3.1.10 Determine Number of Events Within a Class ..... 854
H.1.3.1.11 Determine Event Logging Resolution ..... 854
H.1.3.1.12 Clear Event Configuration ..... 854
H.1.3.1.13 Clear Event Classes ..... 854
H.1.3.1.14 Clear Event Class Log ..... 854
H.1.3.1.15 Retrieve Non-Sequential Clock Changes ..... 855
H.1.3.2 Supplemental Requirements for Event Monitoring ..... 855
H.1.3.2.1 Record and Timestamp Events ..... 855
H.1.3.2.2 Support a Number of Event Classes ..... 855
H.1.3.2.3 Support a Number of Events to Log ..... 855
H.1.3.2.4 Support Monitoring of Event Type Requirements ..... 855
H.1.3.2.4.1 Support On-Change Events ..... 855
H.1.3.2.4.2 Support Greater Than Events ..... 855
H.1.3.2.4.3 Support Less Than Events ..... 855
H.1.3.2.4.4 Support Hysteresis Events ..... 855
H.1.3.2.4.5 Support Periodic Events ..... 855
H.1.3.2.4.6 Support Bit Flag Events ..... 856
H.1.3.2.4.7 Support Event Monitoring on Any Data ..... 856
H.1.4 Generic Control Requirements ..... 856
H.1.4.1 Control External Device ..... 856
H.1.4.2 Control Database Operation Requirements ..... 856
H.1.4.2.1 Control Database Access ..... 856
H.1.4.2.2 Perform Database Consistency Check ..... 856
H.1.4.2.3 Enforce Consistency Check Parameters ..... 856
H.1.5 Generic Performance Requirements ..... 856
H.1.5.1 Atomic Operations ..... 856
H.2 Derived Global Dialogs ..... 857
H.2.1 Manage Communications Environment ..... 857
H.2.1.1 Retrieve Current Configuration of Event Reporting and Logging Service ..... 857
H.2.1.2 Configuring Reporting/Logging Service ..... 857
H.2.1.3 Retrieving Logged Data ..... 858
H.2.2 Determining Device Component Information ..... 859
H.2.3 Global Time Data ..... 859
H.2.3.1 Graphical Depiction of Global Time Data ..... 859
H.2.4 Configure Events ..... 860
H.2.5 Generic Retrieve Table Dialog ..... 860
H.2.6 Generic Retrieve Table Row Dialog ..... 860

© 2023 AASHTO / ITE / NEMA Do Not Copy Without Written Permission

H.2.7 Generic Configure Table Row ..... 861
H.3 External Data Elements ..... 861
**Annex I Communications Ports Protocols [Normative] ..... 862**
I.1 SNMP Group ..... 862
I.2 System Group ..... 863
I.3 RS232 Group ..... 863
I.4 HDLC Group ..... 864
I.5 Interfaces Group ..... 865
I.6 IP Group ..... 866
I.7 ICMP Group ..... 867
I.8 A.33 TCP Group ..... 867
I.9 A.34 UDP Group ..... 868
I.10 A.35 Ethernet Group ..... 868

## TABLE OF FIGURES

Figure 1 Reference Physical Architecture—ASC System ..... 18
Figure 2 Controller Assembly ..... 19
Figure 3 ASC—Connected Vehicle System Context Diagram ..... 21
Figure 4 Physical Architecture 1 ..... 22
Figure 5 Physical Architecture 2 ..... 23
Figure 6 Example Node Point Attribute ..... 198
Figure 7 Get Block Data ..... 226
Figure 8 Set Complex Configuration Parameters ..... 228
Figure 9 Set Block Objects ..... 230
Figure 10 Object Tree for NTCIP 1202 v03B (Continued in Figure 11) ..... 776
Figure 11 Object Tree for NTCIP 1202 v03B (Continued) ..... 777
Figure 12 NTCIP 1202 v03B Tables to Provide SPaT Data ..... 807
Figure 13 Example Intersection Diagram ..... 817
Figure 14 Example signalGroupEntryTable ..... 818
Figure 15 Example agencySignalStateTable ..... 819
Figure 16 Example Intersection Diagram 2 ..... 821
Figure 17 Enabled Lanes Example ..... 833
Figure 18 Connected Data Detectors Mapping ..... 835
Figure 19 SNMP Get Interface ..... 838
Figure 20 SNMP GetNext Interface ..... 839
Figure 21 SNMP Set Interface ..... 839
Figure 22 SNMP Interface—View of Participating Classes ..... 840
Figure 23 Global Time Data ..... 859

## LIST OF TABLES

Table 1 Conformance Symbols ..... 41
Table 2 Conditional Status Notation ..... 42
Table 3 Predicate Mapping to NTCIP 1202 v03 Section ..... 42
Table 4 Support Column Entries ..... 43
Table 5 Protocol Requirements List (PRL) ..... 46
Table 6 Field I/O Devices Supported ..... 136
Table 7 Requirements Traceability Matrix (RTM) ..... 552

 © 2023 AASHTO / ITE / NEMA

Table 8 signalGroupEntryTable Example ..... 822
Table 9 agencySignalStateTable Excerpt ..... 822
Table 10 Example Lane Attributes ..... 825
Table 11 Lanes with Revocable Indications ..... 826
Table 12 Example Enabled Lanes by Time Of Day ..... 826
Table 13 Example spatEnabledLanesConcurrencyTable ..... 827
Table 14 Example timeBaseDayPlanTable ..... 827
Table 15 Example timeBaseAscActionTable ..... 827

© 2023 AASHTO / ITE / NEMA Do Not Copy Without Written Permission

<This page is intentionally left blank.>

Do Not Copy Without Written Permission © 2023 AASHTO / ITE / NEMA

# Section 1
# General [Informative]

## 1.1 Scope

NTCIP 1202 v03 specifies the logical interface between an Actuated Signal Controller (ASC) and the host systems that control them; and the logical interface with a connected vehicle roadside process (such as a roadside unit (RSU)) that interfaces with other devices in a connected vehicle environment. NTCIP 1202 v03 describes the supported ASC functionality in terms of user needs and requirements; however, the nature of the interfaces is determined in part by the operational nature of the devices being controlled, and therefore NTCIP 1202 v03 touches on such operational issues on occasion.

Prior to the development of NTCIP 1202, there were no standards defining how ASCs communicate with host systems. As a result, each manufacturer has developed its own protocol to meet its own particular needs. This approach has resulted in systems that are not interchangeable or interoperable. If an agency wishes to use either a central management system or additional ASC from a different vendor, the agency encounters significant systems integration challenges, requiring additional resources to address. These additional resource requirements inhibit information sharing within and between various potential users of the data and prevent vendor independence. Without manufacturer independence, resource requirements further increase because of a lack of a competitive market.

These problems have not been limited to traffic signal controllers. Many other devices also need to exchange information. In surface transportation, examples include dynamic message signs, bus priority sensors, weather, environmental monitoring, etc.

To address these problems, NTCIP is developing a family of open standards for communications between field devices and central management systems. NTCIP 1202 v03 is part of that larger family and is designed to define an interoperable and interchangeable interface between a transportation management system and an ASC, while still allowing for extensions beyond NTCIP 1202 v03 to allow for new functions as needed; and between an ASC and a connected vehicle roadside process, generally in the form of an RSU. This approach is expected to support the deployment of ASC from one or more vendors in a consistent and resource-efficient way.

NTCIP 1202 v03 standardizes the communications interface by identifying the various operational needs of the users (Section 2) and subsequently identifying the necessary requirements (Section 3) that support each need. NTCIP 1202 v03 then defines the NTCIP standardized communications interface used to fulfill these requirements by identifying the dialogs (Section 4) and related data concepts (Section 5) that support each requirement. Traceability among the various sections is defined by the Protocol Requirements List (Section 3.3) and the Requirements Traceability Matrix (Annex A). Conformance requirements for NTCIP 1202 v03 are provided in Section 3.3. NTCIP 1202 v03 only addresses a subset of the requirements needed for procurement. It does not address requirements related to the performance of the traffic detectors (e.g., accuracy, the supported detection range, the time it takes to detect conditions), hardware components, mounting details, etc.

Previous versions of NTCIP 1202 addressed only Actuated Traffic Signal Controllers (ASC) that employ vehicle or pedestrian detectors to activate a particular phase—the scope did not include pre-timed controllers or fixed-time signal controllers that cycle through phases regardless of the number of vehicles or pedestrians present. ASCs included both fully actuated traffic signals, where all phases are actuated, and phases are skipped if no vehicles or pedestrians are detected, as well as semi-actuated traffic signals, where at least one phase is guaranteed to be served regardless of whether pedestrians or vehicles are detected. For NTCIP 1202 v03 purposes, controllers that allow different phases to be active (or skipped) at any point in time phase are known as phase-based controllers.

© 2023 AASHTO / ITE / NEMA Do Not Copy Without Written Permission

Beginning with NTCIP 1202 v03, the scope was expanded to standardize the communications interface between an ASC and a Roadside Unit (RSU). An RSU is any connected vehicle field device that is used to broadcast messages to, and receive messages from, nearby vehicles using Vehicle-to-Everything (V2X) communications. V2X communications include Dedicated Short Range Communications (DSRC) and Cellular Vehicle-to-Everything (C-V2X).

An implementation of NTCIP 1202 v03 requires lower-level services to structure, encode, and exchange the data concepts defined by NTCIP 1202 v03. NTCIP 1202 v03 assumes that the data concepts are exchanged by one of the protocols defined in NTCIP 2301 v02.

## 1.2 References

### 1.2.1 Normative References

Normative references contain provisions that, through reference in this text, constitute provisions of NTCIP 1202 v03. Other references in NTCIP 1202 v03 might provide a complete understanding or provide additional information. At the time of publication, the editions indicated were valid. All standards are subject to revision, and parties to agreements based on NTCIP 1202 v03 are encouraged to investigate the possibility of applying the most recent editions of the standards listed.

| Identifier | Title |
|---|---|
| NTCIP 1103 v03 | Transportation Management Protocols (TMP), AASHTO / ITE / NEMA, published December 2016 |
| NTCIP 1201 v03 | Global Object (GO) Definitions, AASHTO / ITE / NEMA, published March 2011 |
| NTCIP 1204 v04 | Environmental Sensor Station Interface Standard, AASHTO / ITE / NEMA, published September 2014 (with errata) |
| NTCIP 2103 v02 | Point-to-Point Protocol over RS-232 Subnetwork Profile, AASHTO / ITE / NEMA, published December 2008 |
| NTCIP 2301 v02 | Simple Transportation Management Framework (STMF) Application Profile (AP) (AP-STMF), AASHTO / ITE / NEMA, published July 2010 |
| NTCIP 8004 v02 | Structure and Identification of Management Information (SMI), AASHTO / ITE / NEMA, published June 2010 |
| IETF RFC 1628 | UPS Management Information Base Published May 1994 |
| SAE J2735 | V2X Communications Message Set Dictionary, SAE International, published November 2022 |

### 1.2.2 Other References

The following documents and standards may provide the reader with a better understanding of the entire protocol and the relations between all parts of the protocol. However, these documents do not contain direct provisions that are required by NTCIP 1202 v03. At the time of publication, the editions indicated were valid. All standards are subject to revision, and parties to agreements based on NTCIP 1202 v03 are encouraged to investigate the possibility of applying the most recent editions of the standard listed.

| Identifier | Title |
|---|---|
| ATC 5301 v02.02 | Advanced Transportation Controller (ATC) Cabinet Standard Version 02, v02.02, AASHTO / ITE / NEMA, published March 18, 2019 |
| Caltrans TEES 2020 | Caltrans Transportation Electrical Equipment Specifications (TEES), 2020 |
| CTI 4001 | Connected Transportation Interoperability 4001 - Roadside Unit (RSU) Standard, September 2022, v01.01. https://www.ite.org/technical-resources/standards/rsu-standardization/ |

Do Not Copy Without Written Permission © 2023 AASHTO / ITE / NEMA

| Identifier | Title |
|---|---|
| CTI 4501 | Connected Transportation Interoperability 4501 – Connected Intersections (CI) Implementation Guide, June 2022, v01.01. https://www.ite.org/technical-resources/standards/connected-intersections/ |
| DSRC Roadside Unit (RSU) Specifications Document v4.1 | DSRC Roadside Unit (RSU) Specifications Document v4.1, USDOT, Saxton Transportation Operations Laboratory, Submitted October 31, 2016, Version 1 |
| IAB 16 | (RFC 1155) Structure and Identification of Management Information for TCP/IP-based Internets, M. Rose, K. McCloghrie, May 1990, (RFC 1212) Concise MIB Definitions, M. Rose and K. McCloghrie, March 1991 |
| IEEE 100-2000 | The Authoritative Dictionary of IEEE Standards Terms, 2000 |
| Indiana Traffic Signal Hi Resolution Data Logger Enumerations | J. Sturdevant, T. Overman, E. Raamot, R. Deer, D. Miller, D. Bullock, C. Day, T. Brennan Jr., H. Li, A. Hainen, and S. Remias, Indiana Department of Transportation and Purdue University, 2012. http://docs.lib.purdue.edu/cgi/viewcontent.cgi?article=1002&context=jtrpdata |
| Manual on Uniform Traffic Control Devices (MUTCD) | Manual on Uniform Traffic Control Devices (MUTCD), Federal Highways Administration, 2009 edition with Revision Number 3 Incorporated, August 2022, NEMA, published 2020 |
| NEMA TS 1-1989 (R2020) | NEMA Standards Publication TS 1-1989 (R1994, R2000, R2005, R2020), Traffic Control Systems (Not Recommended for New Designs) |
| NEMA TS 2-2021 | NEMA Standards Publication TS 2-2021, Traffic Controller Assemblies with NTCIP Requirements Version 03.08, NEMA, published 2021. |
| NTCIP 2201:2003 | Transportation Transport Profile (T2), AASHTO / ITE / NEMA, published September 2005 |
| NTCIP 2202:2001 | Transport Profile for Internet (TCP/IP and UDP/IP), AASHTO / ITE / NEMA, published December 2001 |
| OMG Unified Modeling Language Specification, Version 1.5 | OMG Unified Modeling Language Specification, Object Management Group, 2003 |
| SAE J2945/1_202004 | On-Board System Requirements for V2V Safety Communications, SAE International, published April 2020 |
| U.S. Architecture Reference for Cooperative and Intelligent Transportation (ARC-IT) | Architecture Reference for Cooperative and Intelligent Transportation (ARC-IT), USDOT, http://arc-it.net/ |
| V2I Hub Interface Control Document | Integrated Vehicle-to-Infrastructure Prototype (IVP), V2I Hub Interface Control Document (ICD) - Final Report March 2017, FHWA JPO |

### 1.2.3 Contact Information

#### 1.2.3.1 Internet Documents

Obtain Request for Comment (RFC) electronic documents from several repositories on the World Wide Web, or by “anonymous” File Transfer Protocol (FTP) with several hosts. Browse or FTP to:

www.rfc-editor.org
for FTP sites, read ftp://ftp.isi.edu/in-notes/rfc-retrieval.txt

© 2023 AASHTO / ITE / NEMA Do Not Copy Without Written Permission

#### 1.2.3.2 Architecture Reference for Cooperative and Intelligent Transportation

The Architecture Reference for Cooperative and Intelligent Transportation (ARC-IT) may be viewed at:

http://arc-it.net/

ARC-IT is also known as US National ITS Architecture and combines the US National ITS Architecture and the Connected Vehicle Reference Implementation Architecture (CVRIA).

#### 1.2.3.3 NTCIP Standards

Copies of NTCIP standards may be obtained from:

NTCIP Coordinator
National Electrical Manufacturers Association
1300 N. 17th Street, Suite 900
Rosslyn, Virginia 22209-3801
www.ntcip.org
email: ntcip@nema.org

Draft amendments, which are under discussion by the relevant NTCIP Working Group, and amendments recommended by the NTCIP Joint Committee are available.

#### 1.2.3.4 Object Management Group Documents

Copies of OMG standards may be obtained electronically from the Object Management Group at:

www.omg.org

#### 1.2.3.5 SAE International Documents

Copies of SAE International documents may be obtained from:

SAE International
400 Commonwealth Drive
Warrendale, PA 15096
www.sae.org

#### 1.2.3.6 ATC Standards

The Advanced Transportation Controller (ATC) Family of Standards may be viewed at:

https://www.ite.org/technical-resources/standards/

#### 1.2.3.7 Caltrans Standards

Caltrans' Transportation Electrical Equipment Specifications (TEES) may be viewed at:

https://dot.ca.gov/programs/traffic-operations/tees

#### 1.2.3.8 V2I Hub Document

Copies of Integrated Vehicle-to-Infrastructure Prototype (IVP), *V2I Hub Interface Control Document (ICD),* Final Report – March 2017, may be obtained from the FHWA Open Source Application Development Portal (OSADP):

Do Not Copy Without Written Permission © 2023 AASHTO / ITE / NEMA

OSADP
https://www.itsforge.net/

### 1.3 General Statements

<In the opinion of the responsible NTCIP working group, Section 1.3 does not apply in the context of NTCIP 1202 v03.>

### 1.4 Terms

For the purposes of NTCIP 1202 v03, the following terms, definitions, acronyms, and abbreviations apply. Meteorological terms not defined in this section are in accordance with their definitions in the Glossary of Meteorology. Electrical and electronic terms not defined here are used in accordance with their definitions in IEEE 100-2000. English words not defined here or in IEEE 100-2000 are used in accordance with their definitions in Webster's New Collegiate Dictionary.

| Term | Definition |
|---|---|
| **Actuated Signal Controller (ASC)** | Any traffic signal controller, regardless if it is a phase-based controller or interval-based controller. |
| **actuation** | The operation of any type of detector. |
| **advanced preemption time** | The period of time between the minimum warning time needed for railroad operations and the maximum preemption time required for highway traffic signal operations. |
| **automatic flash** | Automatic programmed flash mode not caused by manual switch activation or fault condition or startup. |
| **auxiliary function** | A control that may activate auxiliary functions or outputs in an actuated controller unit. |
| **backup mode** | Control by local TBC or Interconnect based on absence of master or central command. |
| **barrier** | A barrier (compatibility line) is a reference point in the preferred sequence of a multi-ring CU at which all rings are interlocked.<br><br>Note: Barriers ensure there is no concurrent selection and timing of conflicting phases for traffic movement in different rings. All rings cross the barrier simultaneously for the selection and timing of phases on the other side. |
| **Basic Safety Message (BSM)** | The Basic Safety Message (BSM) is used in a variety of applications to exchange safety data regarding vehicle state.<br><br>Source: SAE J2735_202211. |
| **Bus Rapid Transit (BRT)** | Bus rapid transit (BRT) refers to a system of buses that operate more like a conventional rail system than the traditional local buses. BRT lines can operate in mixed traffic like other bus routes, in reserved bus lanes, or even in segregated rights of way. For the purpose of this document, BRT refers to reserved bus lanes or segregated lanes arriving at a signalized intersection. |
| **call** | A registration of a demand for right-of-way by traffic (vehicles or pedestrians) to a controller unit. |

© 2023 AASHTO / ITE / NEMA Do Not Copy Without Written Permission

| Term | Definition |
|---|---|
| **call, serviceable conflicting** | A call that:<br>a) Occurs on a conflicting phase not having the right-of-way at the time the call is placed.<br>b) Occurs on a conflicting phase that is capable of responding to a call.<br>c) When occurring on a conflicting phase operating in an occupancy mode, remains present until given its right-of-way. |
| **channel** | Three circuits of a Monitor Device wired to monitor the green, yellow, and red outputs of the associated load switch position in the Terminal & Facilities. Channel 1 is assumed to monitor Load Switch 1, etc. |
| **check** | An output from a controller unit that indicates the existence of unanswered call(s). |
| **clear track change interval** | The yellow change interval following the clear track green interval and preceding the railroad hold intervals. A red clearance interval shall follow the clear track change interval if such an interval follows the normal yellow change interval. (Preemption of Traffic Signals Near Railroad Crossings - ITE, 2006.) |
| **computed lane** | A lane that has a similar geometry and attributes of another lane. |
| **concurrency group** | A group of phases that describes possible timing combinations.<br><br>Note: A phase within the group is required to be able to time concurrently with any other phase from another ring contained in the group. For example, in the typical dual ring eight phase design, phases 1, 2, 5, and 6 form one concurrency group, and phases 3, 4, 7, and 8 form another concurrency group. |
| **concurrent timing** | A mode of controller unit operation whereby a traffic phase can be selected and timed simultaneously and independently with another traffic phase. |
| **connected device** | A mobile device, such as a vehicle or smartphone, equipped to broadcast, transmit, or receive messages using V2X communications. |
| **Connected Vehicle Roadside Process** | A logical, functional process consisting of sub-processes that support the connected vehicle environment. From the context of an ASC, the relevant sub-processes include running intersection CV applications, broadcasting the SPaT and MAP messages to connected devices, and processing Basic Safety Messages (BSMs) and Personal Safety Messages (PSMs) received from connected devices by the CV Roadside Process. Physically, this may be a roadside unit (RSU). |
| **Controller Assembly (CA)** | A complete electrical device mounted in a cabinet for controlling the operation of a traffic control signal display(s). |
| **Controller Unit (CU)** | A controller unit is that portion of a controller assembly that is devoted to the selection and timing of signal displays. |

Do Not Copy Without Written Permission © 2023 AASHTO / ITE / NEMA

| Term | Definition |
|---|---|
| **Coordinated Universal Time (UTC)** | UTC is the time standard commonly used across the world. The world's timing centers have agreed to keep their time scales closely synchronized—or coordinated. This 24-hour time standard is kept using highly precise atomic clocks combined with the Earth's rotation. UTC is similar to Greenwich Mean Time, but while UTC is a time standard, GMT refers to a time zone (similar to Eastern Standard Time). UTC never changes to account for daylight saving time. |
| **coordination** | The control of controller units in a manner to provide a relationship between specific green indications at adjacent intersections in accordance with a time schedule to permit continuous operation of groups of vehicles along the street at a planned speed. |
| **coordinator** | A device or program/routine that provides coordination. |
| **cycle** | The total time to complete one sequence of signalization around an intersection. In an actuated controller unit, a complete cycle is dependent on the presence of calls on all phases.<br><br>Note: In a pre-timed controller unit it is a complete sequence of signal indications. |
| **cycle length** | The time period in seconds required for one complete cycle. |
| **detector, pedestrian** | Pedestrian detectors may be pushbuttons or passive detection devices. Passive detection devices register the presence of a pedestrian in a position indicative of a desire to cross, without requiring the pedestrian to push a button. Some passive detection devices are capable of tracking the progress of a pedestrian as the pedestrian crosses the roadway for the purpose of extending or shortening the duration of certain pedestrian timing intervals.<br><br>Note: Manual of Uniform Traffic Control Devices, FHWA, May 2012. |
| **detector, system** | Any type of vehicle detector used to obtain representative traffic flow information. |
| **detector, vehicle** | A detector that is responsive to operation by or the presence of a vehicle. |
| **dial** | The cycle timing reference or coordination input activating same. Dial is also frequently used to describe the cycle. |
| **display map** | A graphic display of the street system being controlled showing the status of the signal indications and the status of the traffic flow conditions. |
| **dual entry** | Dual entry is a mode of operation (in a multi-ring CU) in which one phase in each ring is required to be in service.<br><br>Note: If a call does not exist in a ring when it crosses the barrier, a phase is selected in that ring to be activated by the CU in a predetermined manner. |
| **dwell** | The interval portion of a phase when present timing requirements have been completed. |
| **dynamic timing pattern** | A transient timing plan to be used for the next cycle only. |

© 2023 AASHTO / ITE / NEMA Do Not Copy Without Written Permission

| Term | Definition |
|---|---|
| **external control location application** | An application that asserts a higher-level control over the traffic signal controller. |
| **enabled lanes (list)** | A sequence of lane identifiers for lanes that are identified to be enabled (active) and can be used by the appropriate travelers at the current time. |
| **fault monitor state** | Internal CU diagnostics have determined that the CU device is not in a safe operational state.<br><br>Note: An output may be asserted to indicate this condition. |
| **first coordinated phase** | The coordinated phase that occurs first within the concurrent group of phases containing the coordinated phase(s) when there are constant calls on all phases. |
| **Flash** | An operation where one section in each vehicle signal (yellow or red) is alternately on and off with a one-second cycle time and a 50% duty cycle. |
| **Force Off** | A command to force the termination of the green indication in the actuated mode or Walk Hold in the nonactuated mode of the associated phase.<br><br>Note: Termination is subject to the presence of a serviceable conflicting call. The Force Off function is not effective during the timing of the Initial, Walk, or Pedestrian Clearance. The Force Off is only effective as long as the condition is sustained. If a phase-specific Force Off is applied, the Force Off does not prevent the start of green for that phase. |
| **Free** | Operation without coordination control from any source. |
| **gap reduction** | A feature whereby the Unit Extension or allowed time spacing between successive vehicle actuations on the phase displaying the green in the extensible portion of the Green indication is reduced. |
| **Group** | Any portion of a traffic control network (system) that can be controlled by a common set of timing patterns. |
| **Hold** | A command that retains the existing Green indication. |
| **Hold-on line** | A signal to an intersection controller commanding it to remain under computer control. |
| **indication** | The part or parts of the signal cycle during which signal indication displays do not change. |
| **interchangeability** | A condition that exists when two or more items possess such functional and physical characteristics as to be equivalent in performance and durability and are capable of being exchanged one for the other without alteration of the items themselves, or adjoining items, except for adjustment, and without selection for fit and performance.<br><br>Source: National Telecommunications and Information Administration, U.S. Department of Commerce. |

Do Not Copy Without Written Permission © 2023 AASHTO / ITE / NEMA

| Term | Definition |
|---|---|
| **Interconnect** | A means of remotely controlling some or all of the functions of a traffic signal. |
| **interoperability** | The ability of two or more systems or components to exchange information and use the information that has been exchanged<br><br>Source: IEEE 610.12-1990: IEEE Standard Glossary of Software Engineering Terminology. |
| **intersection status** | The knowledge of whether a controlled intersection is online and which mode it is currently operating in. |
| **Interval-based controller** | A traffic signal controller implementing a sequence of defined, discrete steps (i.e., an interval), each interval driving their associated signal indications, in a repeating cycle according to the timing constraints programmed into the device. Note that some step sequences may be displayed or skipped in response to traffic conditions. |
| **Light Rail Transit (LRT)** | A metropolitan electric railway system characterized by its ability to operate single cars or short trains along exclusive rights-of-way at ground level, on aerial structures, in subways, or, occasionally, in streets, and to board and discharge passengers at track or car-floor level. For the purpose of this document, LRT refers to exclusive rights-of-way lanes arriving at a signalized intersection. |
| **load switch driver group** | The set of three outputs that are used to drive load switch inputs to provide a Green, Yellow, or Red output condition for vehicle signals or Walk, Ped Clear, or Don't Walk output condition for pedestrian signals. |
| **Malfunction Management Unit (MMU)** | A device used to detect and respond to improper and conflicting signals and improper operating voltages in a traffic controller assembly. |
| **Management Information Base (MIB)** | A structured collection or database of related managed objects defined using Abstract Syntax Notation One (ASN.1).<br><br>Source: NTCIP 8004 v02 and ISO/IEC 8824-1:2008 and ISO/IEC 8825-1:2008. |
| **MAP message** | The MAPData message is used to convey many types of geographic road information. At the current time, its primary use is to convey one or more intersection lane geometry maps within a single message.<br><br>Source: SAE J2735_202211. |
| **maximum green** | The maximum green time with a serviceable opposing actuation, which may start during the initial portion. |
| **Mobile Unit (MU)** | A device used to wirelessly communicate with other devices for safety and mobility purposes carried by a pedestrian, bicyclist, work zone worker, or other traveler. |
| **Movement** | An action that is taken to traverse through an intersection, reflecting the user perspective and defined by the user type. |

© 2023 AASHTO / ITE / NEMA Do Not Copy Without Written Permission

| Term | Definition |
|---|---|
| **Multi-ring controller unit** | A multi-ring CU contains two or more interlocked rings that are arranged to time in a preferred sequence and to allow concurrent timing of all rings, subject to barrier restraint. |
| **Node point** | A point defining the centerline of the pathway of a lane. |
| **nonlocking memory** | A mode of actuated controller unit operation that does not require the retention of a call for future utilization by the controller assembly. |
| **Occupancy** | A measurement of vehicle presence within a zone of detection, expressed in seconds of time a given point or area is occupied by a vehicle. |
| **Off-line** | A controller assembly not under the control of the normal control source. |
| **Offset** | The time relationship, expressed in seconds, between the starting point of the first coordinated phase Green and a system reference point. (See definition of *first coordinated phase*.) |
| **omit, phase** | A command that causes omission of a selected phase. |
| **On-Board Unit (OBU)** | A device used to wirelessly communicate with other devices for safety and mobility purposes installed in a vehicle as original equipment or as aftermarket equipment (sometimes referred to as an “aftermarket safety device (ASD)”. |
| **Online** | A controller assembly under the control of the normal control source. |
| **Overlap** | A Green display that allows traffic movement during the green indications of and clearance indications between two or more phases. |
| **Passage time** | The time allowed for a vehicle to travel at a selected speed from the detector to the stop line. |
| **Pattern** | A unique set of coordination parameters (cycle value, split values, offset value, and either signal plan or phase sequence).<br><br>Note: A phase-based timing pattern consists of a cycle length, offset, set of minimum green and maximum green values, force off (determined by splits in some cases), and phase sequence. It also includes specification of phase parameters for minimum or maximum vehicle recall, pedestrian recall, or phase omit.<br><br>An interval-based timing pattern consists of a cycle length, offset, set of minimum and programmed interval duration values, and signal plan sequence. |
| **Pedestrian clearance interval** | The first clearance interval for the pedestrian signal following the pedestrian WALK indication. |
| **Pedestrian recycle** | A method of placing a recurring demand for pedestrian service on the movement when that movement is not in its Walk interval. |
| **permissive** | A time period, during which the CU is allowed to leave the coordinated phase(s) under coordination control to go to other phases. |

Do Not Copy Without Written Permission © 2023 AASHTO / ITE / NEMA

| Term | Definition |
|---|---|
| **Personal Safety Message (PSM)** | The Personal Safety Message (PSM) is used to broadcast safety data regarding the kinematic state of various types of Vulnerable Road Users (VRU), such as pedestrians, cyclists, or road workers.<br><br>Source: SAE J2735_202211. |
| **phase sequence** | A predetermined order in which the phases of a cycle occur. |
| **phase, active** | The indicated phase is currently timing. A phase is always active if it is Green or Yellow (Walk or Pedestrian Clear for Pedestrian Phases). It is also active if it is timing Red Clearance. It may be considered active during Red Dwell. |
| **phase, conflicting** | Conflicting phases are two or more traffic phases that cause interfering traffic movements if operated concurrently. |
| **phase, nonconflicting** | Nonconflicting phases are two or more traffic phases that do not cause interfering traffic movements if operated concurrently. |
| **phase, pedestrian** | A traffic phase allocated to pedestrian traffic that may provide a right-of-way pedestrian indication either concurrently with one or more vehicular phases, or to the exclusion of all vehicular phases. |
| **phase, traffic** | Those green, change, and clearance intervals in a cycle assigned to any independent movement(s) of traffic. |
| **phase, vehicular** | A vehicular phase is a phase that is allocated to vehicular traffic movement as timed by the controller unit. |
| **preempt dwell interval** | The period of time when the track area is occupied by a tracked vehicle. |
| **preemption** | The transfer of the normal control of signals to a special signal control mode for the purpose of servicing railroad crossings, emergency vehicle passage, mass transit vehicle passage, and other special tasks, the control of which requires terminating normal traffic control to provide the priority needs of the special task. |
| **preemptor** | A device or program/routine that provides preemption. |
| **priority request** | The information that describes a need for (signal) priority service based upon user-defined criteria (such as the number of minutes behind schedule, vehicle occupancy levels, vehicle class, etc.).<br><br>Note: From NTCIP 1211 v02. |
| **progression** | The act of various controller units providing specific green indications in accordance with a time schedule to permit continuous operation of groups of vehicles along the street at a planned speed. |
| **red clearance interval** | A clearance interval that may follow the yellow change interval during which both the terminating phase and the next phase display Red signal indications. |
| **red revert** | Provision within the controller unit to ensure a minimum Red signal indication in a phase following the Yellow Change interval of that phase. |
| **referenced lane** | A lane used to define the attributes of another lane. |

© 2023 AASHTO / ITE / NEMA Do Not Copy Without Written Permission

| Term | Definition |
|---|---|
| **rest** | The interval portion of a phase when present timing requirements have been completed. |
| **right-of-way transfer time** | While providing preemption, the maximum amount of time needed for the worst-case condition, prior to display of the clear track green interval. This includes any railroad or traffic signal control equipment time to react to a preemption call, and any traffic signal green, pedestrian walk and clearance, yellow change, and red clearance interval for conflicting traffic. |
| **ring** | A ring consists of two or more sequentially timed and individually selected conflicting phases so arranged as to occur in an established order. |
| **Roadside Unit (RSU)** | A transportation infrastructure communications device located on the roadside that provides V2X connectivity between OBUs/MUs and other parts of the transportation infrastructure, including traffic control devices, traffic management systems, and back-office systems.<br>Note: Devices that are not part of the transportation infrastructure, such as cellular base stations or satellites, are not RSUs.<br>Source: CTI 4001. |
| **sample** | A collection of data recorded over an identified period of time. |
| **sequence, interval** | The order of appearance of signal indications during successive intervals of a cycle. |
| **service request** | The information that describes a (signal) priority service to be processed by the ASC.<br><br>Note: From NTCIP 1211 v02. |
| **service requestor** | A traveler requesting signal service or priority using a connected device. The connected device may be an OBE or a smartphone. |
| **signal control priority strategy** | Defines the phases to be serviced, phases to be omitted, and maximum green times that can be reduced or extended to service a priority request. |
| **Signal Monitoring Unit (SMU)** | A subassembly that performs signal monitoring functions within a traffic signal cabinet. The signal monitoring unit is called a Malfunction Management Unit (MMU) in the NEMA TS 2 standard and a Cabinet Monitor Unit (CMU) in the ITS Cabinet Standard. |
| **signal plan** | A unique set of parameters that define the phase / interval sequence of signal indications and control for one cycle. |
| **signal request** | A request for signal service or signal priority via an SAE J2735 Signal Request Message. |
| **single entry** | Single entry is a mode of operation (in a multi-ring CU) in which a phase in one ring can be selected and timed alone if there is no demand for service in a nonconflicting phase on the parallel ring(s). |
| **single-ring controller unit** | A single-ring CU contains two or more sequentially timed and individually selected conflicting phases so arranged as to occur in an established order. |
| **special function** | A control that may activate a device external to the controller unit. |

Do Not Copy Without Written Permission © 2023 AASHTO / ITE / NEMA

| Term | Definition |
|---|---|
| **split** | The segment of the cycle length allocated to each phase or interval that may occur (expressed in seconds).<br><br>Note: In an actuated controller unit, split is the time in the cycle allocated to a phase. |
| **stall condition** | An operational state in which the ASC can no longer transmit any data to the management station.<br><br>Note: The health monitor (watchdog) might or might not work in this situation, but its condition is not able to be transmitted to the management station. |
| **standby mode** | An operational state called by master or central command that directs the controller unit to select Pattern, Automatic Flash, or Automatic Free based on local Time Base schedule or Interconnect inputs. |
| **TimeChangeDetail** | A data frame that conveys details about the timing of a phase within a movement. The core data concept expressed is the time stamp (time mark) at which the related phase will change to the next state.<br><br>Source: SAE J2735_202211. |
| **Time-based Control (TBC)** | A means for the automatic selection of modes of operation of traffic signals in a manner prescribed by a predetermined time schedule. |
| **timing pattern** | See *Pattern*. |
| **timing plan** | The Split times for all segments (Phase/Interval) of the coordination cycle. |
| **track clearing interval** | While providing preemption, the time assigned to clear stopped vehicles from the track area on the approach to the signalized highway intersection. |
| **Traffic Signal Controller Broadcast Message (TSCBM)** | A message defined in the V2I Hub Interface Control Document containing signal phase and timing (SPaT) information composed of the SNMP data objects sent by the traffic signal controller to an RSU. |
| **volume** | The number of vehicles passing a given point per unit of time. |
| **yellow change interval** | The first interval following the green interval in which the signal indication for that phase is yellow. |
| **yield** | A command that permits termination of the green interval. |
| **zone** | An area in which traffic parameters can be measured and/or traffic data can be generated. |

© 2023 AASHTO / ITE / NEMA Do Not Copy Without Written Permission

### 1.5 Abbreviations

The abbreviations (acronyms) used in NTCIP 1202 v03, and not defined in Section 1.4, are defined as follows:

| | |
|---|---|
| **ADA** | Americans with Disabilities Act |
| **APS** | Accessible Pedestrian Signals |
| **BIU** | Bus Interface Unit |
| **CMU** | Cabinet Monitor Unit |
| **CV** | Connected Vehicles |
| **CVRIA** | Connected Vehicles Reference Implementation Architecture |
| **DSRC** | Dedicated Short Range Communications |
| **ECLA** | External Control Local Application |
| **GNSS** | Global Navigation Satellite System |
| **GPS** | Global Positioning System |
| **HOV** | High Occupancy Vehicle |
| **ITS** | Intelligent Transportation Systems |
| **MAC** | Media Access Control |
| **MUTCD** | Manual on Uniform Traffic Control Devices |
| **PRL** | Protocol Requirements List |
| **RSE** | Roadside Equipment |
| **RSU** | Roadside Unit |
| **RTM** | Requirements Traceability Matrix |
| **SIU** | Serial Interface Unit |
| **SNMP** | Simple Network Management Protocol |
| **SPaT** | Signal Phase and Timing (as defined by SAE J2735_202007) |
| **V2X** | Vehicle-to-Everything |
| **VRU** | Vulnerable Road User |

Do Not Copy Without Written Permission © 2023 AASHTO / ITE / NEMA

# Section 2
# Concept of Operations [Normative]

Section 2 defines the user needs that subsequent sections within NTCIP 1202 v03 address. Accepted system engineering processes detail that requirements should only be developed to fulfill well-defined user needs. The first stage in this process is to identify the ways in which the system is intended to be used. In the case of NTCIP 1202 v03, this entails identifying the various ways in which transportation system managers may use ASC information to fulfill their duties.

This concept of operations provides the reader with:

a) a detailed description of the scope of NTCIP 1202 v03;
b) an explanation of how an ASC is expected to fit into the larger context of an ITS network;
c) a starting point in the agency procurement process; and
d) an understanding of the perspective of the designers of NTCIP 1202 v03.

Section 2 is intended for all readers of NTCIP 1202 v03, including:

a) transportation system managers
b) transportation operations personnel
c) transportation engineers
d) system integrators
e) device manufacturers

For the first three categories of readers, Section 2 is useful to understand how ASC equipment can be used in their system. For this audience, Section 2 serves as the starting point in the procurement process, and enables these readers to become familiar with each feature supported by NTCIP 1202 v03 and determine whether that feature is appropriate for their implementation. If it is, then the procurement specification needs to require support for the feature and all of the mandatory requirements related to that feature.

For the last two categories of readers, Section 2 provides a more thorough understanding as to why the more detailed requirements exist later in NTCIP 1202 v03.

## 2.1 Tutorial [Informative]

A concept of operations describes a proposed system from the users' perspective. Typically, a concept of operations is used on a project to ensure that system developers understand users' needs. Within the context of NTCIP standards, a concept of operations documents the intent of each feature for which NTCIP 1202 v03 supports a communications interface. It also serves as the starting point for users to select which features may be appropriate for their project.

The concept of operations starts with a discussion of the current situation and issues that have led to the need to deploy systems covered by the scope of NTCIP 1202 v03 and to the development of NTCIP 1202 v03 itself. This discussion is presented in layman's terms such that both the potential users of the system and the system developers can understand and appreciate the situation.

The concept of operations then documents key aspects about the proposed system, including:

a) **Reference Physical Architecture:** The reference physical architecture defines the overall context of the proposed system and defines which specific interfaces are addressed by NTCIP 1202 v03. The reference physical architecture is supplemented with one or more samples that describe how the reference physical architecture may be realized in an actual deployment.

© 2023 AASHTO / ITE / NEMA Do Not Copy Without Written Permission

b) **Architectural Needs:** The architectural needs section discusses the issues and needs relative to the system architecture that have a direct impact on NTCIP 1202 v03.
c) **Features:** The features identify and describe the various functions that users may want components of an ASC system to perform. These features are derived from the high-level user needs identified in the problem statement but are refined and organized into a more manageable structure that forms the basis of the traceability tables contained in Section 3 and Annex A.

The architectural needs and features are collectively called user needs. Section 3 uses these user needs in the analysis of the system to define the various functional requirements of an ASC. Each user need shall be traced to one or more functional requirements, and each functional requirement shall be derived from at least one user need. This traceability is shown in the Protocol Requirements List (PRL) as provided in Section 3.3.

While NTCIP 1202 v03 is intended to standardize communications across a wide range of deployments, it is not intended to mandate support for every feature for every deployment. Therefore, the PRL also defines each user need and requirement as mandatory, optional, or conditional. The only items marked mandatory are those that relate to the most basic functionality of the device. To obtain a device that meets specific needs, the user first identifies which optional needs are necessary for the specific project.

Each requirement identified is then presented in the Requirements Traceability Matrix (RTM) in Annex A, which defines how the requirement is fulfilled through standardized dialogs and data element definitions provided in Section 4 and Section 5.

A conformant device may support other user needs, as long as they are conformant with the requirements of NTCIP 1202 v03 and its normative references (see Section 1.2.1). For example, a device may support data that has not been defined by NTCIP 1202 v03; however, when exchanged via one of the NTCIP 2301 v02 protocols, the data shall be properly registered with a valid OBJECT IDENTIFIER under the Global ISO Naming Tree.

> Note: Off-the-shelf interoperability and interchangeability can only be obtained by using well-documented user needs, along with their corresponding requirements and design, that are broadly supported by the industry as a whole. Designing a system that uses environments or features not defined in a standard or not typically deployed in combination with one another inhibits the goals of interoperability and interchangeability, especially if the documentation of these user needs is not available for distribution to system integrators. NTCIP 1202 v03 allows implementations to support additional user needs to support innovation, which is constantly needed within the industry, but users should be aware of the risks involved with using such environments or features.

The concept of operations concludes by describing the degree to which security issues have been addressed by NTCIP 1202 v03 and by providing a description of how NTCIP 1202 v03 relates to the National ITS Architecture and the Connected Vehicle Reference Implementation Architecture (now known as the Architecture Reference for Cooperative and Intelligent Transportation (ARC-IT)).

### 2.2 Current Situation and Problem Statement [Informative]

Transportation system managers use ASCs to control traffic operations on a roadway. ASCs allow different conflicting movements to travel across a roadway in a safe, orderly manner. In a roadway network, ASCs can be coordinated to improve mobility of certain movements, such as along a major arterial. Implemented correctly, ASCs can reduce:

a) the number and severity of accidents
b) delays
c) stops

 © 2023 AASHTO / ITE / NEMA

d) fuel consumption
e) emission of pollutants

There are numerous factors that may affect the operation of an ASC on a roadway. Transportation system managers need to program each ASC to avoid conflicting movements. Conflicting movements are not confined to one specific mode of travel. Travel modes that have movements controllable by an ASC include:

a) vehicles
b) pedestrians
c) bicycles
d) special vehicles

Special vehicles are vehicles that have one or more characteristics so that an ASC may treat differently than “ordinary” vehicles. Special vehicles may include emergency vehicles or transit vehicles that request preferential (i.e., priority) treatment, or a high occupancy vehicle (HOV) with its own right-of-way (e.g., an HOV-only lane) through the intersection.

Each travel mode may have its own minimum clearance requirements that are satisfied to provide sufficient time for traffic to traverse the roadway before a conflicting movement is allowed to move.

Transportation system managers can also program an ASC to use inputs from other devices, such as detectors, to measure demand for a specific movement to improve mobility, so that additional time is provided for the movement where the demand exists and less time, if any, is provided for the movement where demand does not exist. An ASC also may be deployed with signal preemption or signal priority capabilities to properly manage movements in special situations. These capabilities, if implemented by the transportation system manager, may allow an emergency vehicle responding to an incident or a railroad at a railroad crossing to preempt the signal and obtain right-of-way. Similarly, signal priority may allow a transit or other fleet vehicle to request preferential treatment through a signalized intersection.

The ASC is also expected to have an important role in the connected vehicle environment. In the United States, the connected vehicle environment has three major goals—to improve safety, mobility, and the environment. Many of the key applications being developed in support of these goals near signalized intersections involve the infrastructure providing signal phasing and timing information to “connected” devices, such as connected vehicles and “connected” mobile devices, such as a smartphone.

## 2.3 Reference Physical Architecture [Informative]

Section 2.3 represents an overview of what a complete ASC system may look like for a transportation agency, and identifies the specific information exchange paths to be addressed by NTCIP 1202 and related standards.

© 2023 AASHTO / ITE / NEMA Do Not Copy Without Written Permission

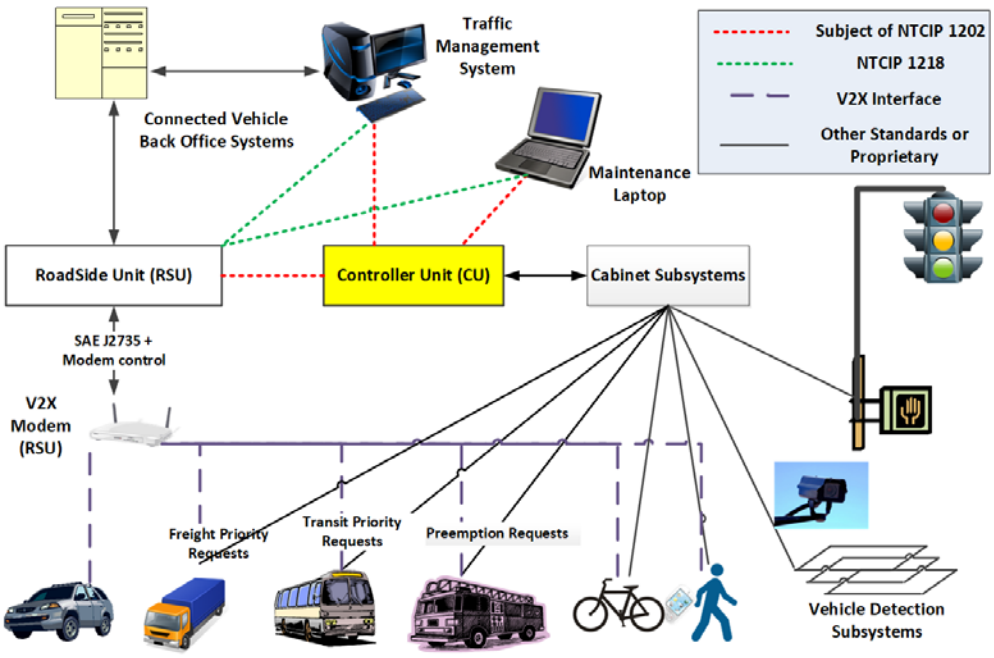


**Figure 1 Reference Physical Architecture—ASC System**

The components of the ASC system include:

a) **Controller Unit (CU):** A host computing platform that is used to manage the traffic signals at an intersection. The CU is responsible for ensuring that the proper signal indications are present on traffic signals. It communicates with the Traffic Management System and other devices through communication ports, and interfaces with the cabinet subsystems to energize the signal heads, read vehicle actuations, drive other auxiliary outputs, and read various inputs such as pedestrian push buttons. It may also communicate with other CUs.

b) **Management Station:** One or more host computing platforms that manage one or more NTCIP field devices, such as an ASC. The management station is responsible for configuring, monitoring, and controlling the ASC. There may be multiple management stations for a given ASC. A “manager” is a transportation system manager or maintenance person who needs to access information in the ASC through the management station.

c) **Traffic Management System:** A management station is typically located in some type of management center (e.g., a Traffic Management Center) and may be a considerable distance from the ASC. The TMC typically acts as a management station (b) with respect to the ASC.

d) **Maintenance Laptop:** A computer that a field technician may use on a trip to visit the ASC or a field processor that may be used to access the ASC. It typically acts as a management station (b) with respect to the ASC. It is commonly used to monitor the data reported from the ASC and automatically activate signs or other equipment under certain conditions. It typically plugs directly into the Controller Unit (a).

e) **Roadside Unit (RSU):** A connected vehicle field device that includes a computing platform running applications and that supports secure communications with connected devices. The RSU receives messages from and transmits messages to nearby connected devices (vehicles or mobile devices) using V2X communications.
In an ASC System, it may also act as a functional process, called the CV Roadside Process in NTCIP 1202 v03.

f) **Detection Subsystems:** The units that provide inputs for traffic-actuated control, surveillance, or data collection systems. Detection subsystems include a wide variety of devices to detect the presence and other characteristics of travelers within the range of the intersection. In some instances, such detection devices may be connected directly to the Controller Unit (a) and collect

 © 2023 AASHTO / ITE / NEMA

a variety of data such as volume, occupancy, speed, and headway or be used for signal priority or preempt detection.

g) **Cabinet Subsystems:** The controller assembly that consists of the electrical devices in the cabinet for controlling the operation of a traffic control signal display(s). See Figure 2.

Other components shown in Figure 1 include:

h) **Connected Vehicle Back Office Systems:** Represent centers that manage and support the connected vehicle environment.

Note: The deployment of connected vehicle equipment (such as the RSU) is currently very limited, but is expected to be widespread as more V2X equipped vehicles are delivered to the marketplace. Also, Figure 1 is only one possible architecture that might be used for the deployment of the infrastructure for connected vehicles, and other architectures are possible.

### 2.3.1 ASC Characteristics—Cabinet Specifications

NTCIP 1202 v03 is intended to address the communications interface between any management station and a controller unit. However, some features defined within NTCIP 1202 v03 apply only to ASCs using a specific transportation cabinet architecture. There are five transportation cabinet architectures that are commonly used in North America.

a) **Model 332 Cabinet.** A cabinet specification defined in the Caltrans Transportation Electrical Equipment Specification (TEES).
b) **NEMA TS 1 Cabinet.** A cabinet architecture defined in NEMA TS 1.
c) **NEMA TS 2 Type 2 Cabinet.** A cabinet architecture defined in NEMA TS 2.
d) **NEMA TS 2 Type 1 Cabinet.** A cabinet architecture defined in NEMA TS 2.
e) **ITS Cabinet.** A specification for Intelligent Transportation Systems (ITS) enclosures. The ITS Cabinet specification defines the subassemblies that provide functionalities within the cabinet.

Figure 2 shows a more detailed look at the components that may be inside a controller assembly.

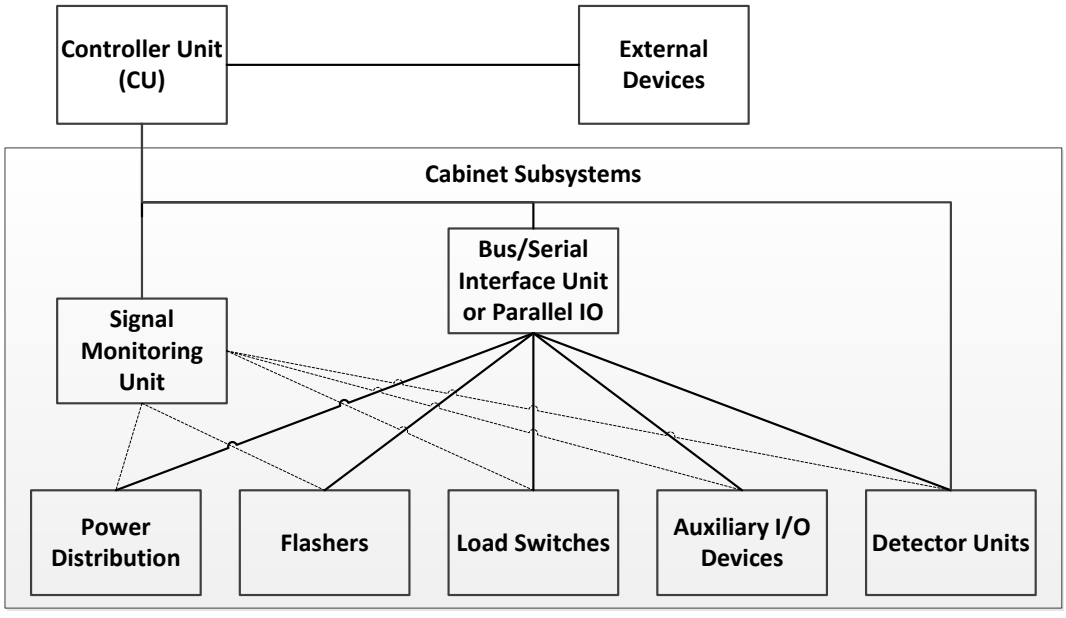


**Figure 2 Controller Assembly**

© 2023 AASHTO / ITE / NEMA Do Not Copy Without Written Permission

Cabinet subsystems include:

a) **Bus/Serial Interface Unit or Parallel IO:** The communications interface between the CU and the cabinet subsystem. It is called the Bus Interface Unit in the NEMA TS 2 standard and the Serial Interface Unit (SIU) in the ITS Cabinet Standard. Some systems may use a Parallel Input/Output (IO) for the communications interface. It provides the means by which the CU can control the various cabinet devices, and can monitor inputs to provide analysis and data for use by the traffic management algorithms and the Traffic Management System shown in Figure 1.
b) **Power Distribution:** Provides protected power distribution to the various components and devices within the cabinet.
c) **Flashers:** Devices used to open and close signal circuits at a repetitive rate. They are typically used to provide a “fail-safe” flashing operation when the Signal Monitoring Unit (e) determines that there is a failure within the cabinet wiring/devices such as shorted load switches, defective cabinet power supplies, or conflicting signal indications.
d) **Load Switches:** Devices used to switch power to the signal lamps/indications. This typically includes pedestrian signals, traffic signals, auxiliary signs, and other auxiliary devices.
e) **Signal Monitoring Unit:** A subassembly that performs signal monitoring functions within a traffic signal cabinet. The signal monitoring unit is called a Malfunction Management Unit (MMU) in the NEMA TS 2 standard and a Cabinet Monitor Unit (CMU) in the ITS Cabinet Standard. When it detects a failure in the operation or a device, it can place the cabinet into the flashing condition using the flashers (c). It also monitors the power line voltage and places the cabinet into the “fail-safe” condition when the operating voltage is below configured minimums and holds the cabinet in the “startup” flashing condition upon power restoration to allow the CU to boot and start normal operation.
f) **Detector Units:** Devices that support the detection of travelers (e.g., vehicles, pedestrians, bicycles, transit vehicles, emergency vehicles). In some cases, the interface allows the CU to monitor the health and gather additional information from the detection subsystems.

In addition, other external devices (equipment) may be mounted inside the controller assembly that are used to provide inputs to the CU or to control traffic flow. Examples of external devices include traffic preemptors, signal priority equipment, or traffic control beacons.

### 2.3.2 ASC Characteristics—Controller Types

Some features defined within NTCIP 1202 v03 may not be applicable to all ASCs—some features are dependent on whether an ASC is one of the following types of controllers.

a) **Phase-based controller.** “Phase-based signal controllers” refers to a device implementing non-conflicting signal indications in response to traffic conditions and the timing constraints programmed into the device. A phase controls signal indications for one or more non-conflicting traffic movements and may be actuated by those movements’ traffic. In a phase-based, fully actuated system, phases without traffic present may be skipped. Green indication durations may vary between pre-set minimum and maximum values, depending on detected traffic and programmed timing information.
b) **Interval-based controller.** “Interval-based signal controllers” refers to a device implementing a sequence of defined, discrete steps (i.e., an interval), each driving the signal indications, in a repeating cycle according to the timing constraints programmed into the device. Note that some step sequences may be displayed or skipped in response to traffic conditions.

   Note: Some controllers can operate either as an interval-based controller or a phase-based controller (but not simultaneously). Other types of controllers, such as staged-based controllers, are not addressed by NTCIP 1202 v03.

   Note: An agency (procurement) specification may include one or both of these types.

Only phase-based controllers are supported by NTCIP 1202 v03.

Do Not Copy Without Written Permission © 2023 AASHTO / ITE / NEMA

### 2.3.3 ASC Characteristics—Connected Vehicle Interface

NTCIP 1202 v03 also addresses the communications data exchange between an ASC and a Roadside Unit (RSU). The RSU is a component of the connected vehicle environment, defined as a "V2X device that serves as the demarcation component between vehicles and other mobile devices and existing traffic equipment." It is through this communications interface with the RSU that an ASC primarily interacts with the connected vehicle environment. Before the ASC-RSU interface can be effectively addressed, an understanding of the other interfaces between the RSU and connected devices, and the interface among the management station, an ASC, and an RSU, is helpful.

Some features defined within NTCIP 1202 v03 for the connected vehicle interface are dependent on the relationship between the ASC and the RSU. The Connected Vehicle Reference Implementation Architecture (CVRIA) implies a logical framework of applications and services that are allocated to the RSU. Therefore, the applications may have needs for information that are provided by the ASC (e.g., information needed to create signal phase and timing (SPaT) messages, status of signal priority requests) or may provide information to the ASC so the ASC may improve safety and mobility at a signalized intersection (e.g., forward a signal priority request, forward location of connected vehicle).

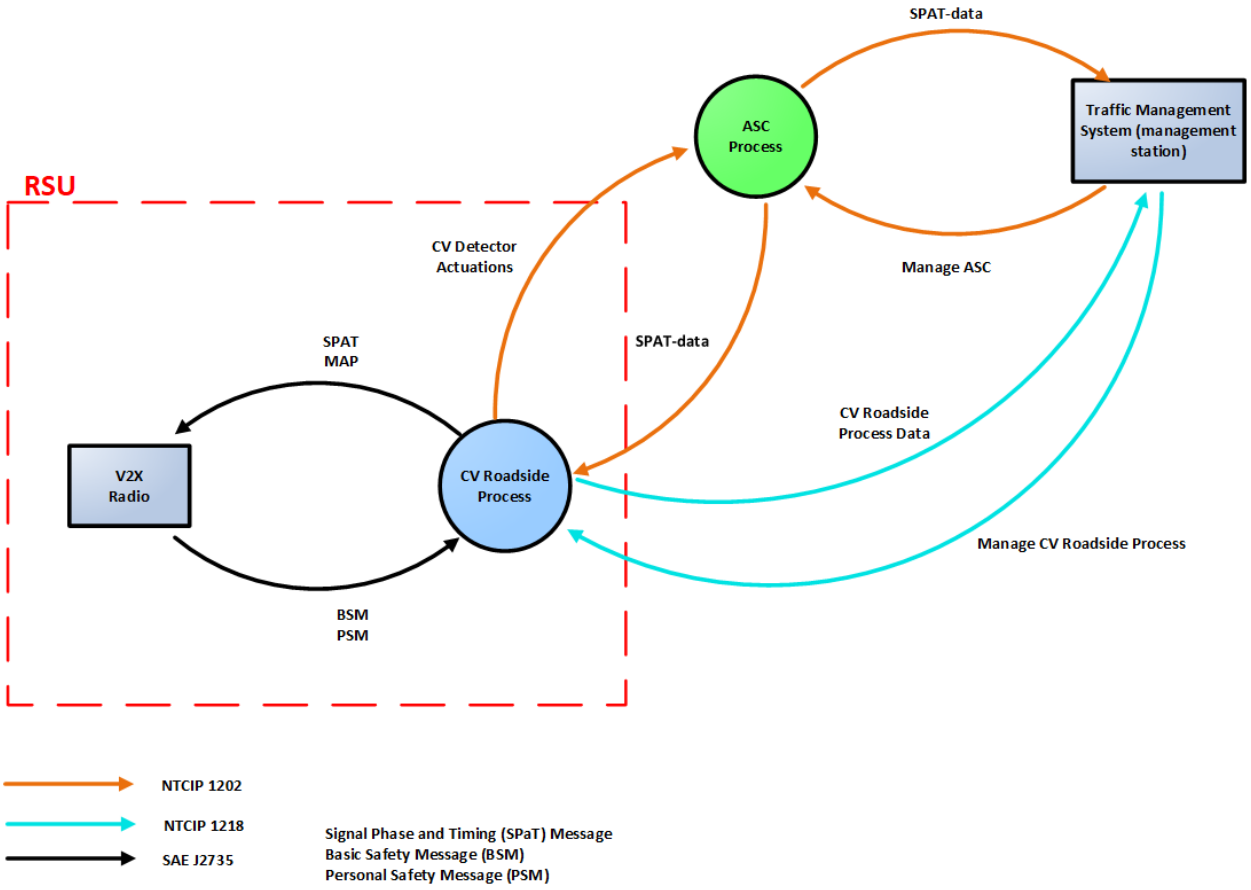


**Figure 3 ASC—Connected Vehicle System Context Diagram**

Figure 3 is a logical system context diagram for an ASC system's interaction with the connected vehicle environment. The connected vehicle environment around the ASC focuses on two distinct logical processes: the ASC Process and the Connected Vehicle (CV) Roadside Process.

© 2023 AASHTO / ITE / NEMA Do Not Copy Without Written Permission

The ASC Process consists of the traditional processes providing control of a signalized intersection, possibly using inputs that indicate the traffic demand around the intersection. The source of those inputs may be detection subsystems located within or connected to the same cabinet as the traffic signal controller, or from the CV Roadside Process. The ASC Process allows a traffic management system to monitor and manage the traffic signal controller, and generates signal phase and timing information that may be shared with the CV Roadside Process.

The CV Roadside Process consists of sub-processes that support the connected vehicle environment. From the context of an ASC, the relevant sub-processes include running intersection CV applications, broadcasting the SPaT and MAP messages to connected devices, and processing Basic Safety Messages (BSMs) and Personal Safety Messages (PSMs) received from connected devices by the CV Roadside Process. In the context of an ASC, the CV Roadside Process is also responsible for receiving signal phase and timing information from the ASC Process. The CV Roadside Process may also allow a traffic management system to configure and manage the MAP messages that are broadcasted by the CV Roadside Process, and to configure the CV Roadside Process to use BSMs and PSMs as inputs to the ASC Process. The CV Roadside Process may also allow the traffic management center to monitor the MAP messages broadcasted. The CV Roadside Process may also perform other functions, such as send and manage security certificates or configure and manage other CV-related applications; however, these functions are outside the scope of NTCIP 1202 v03.

Figure 3 also depicts the interfaces between the different entities and processes that make up the connected vehicle environment around the ASC. The information exchanges depicted in black, specifically between the V2X Radio and the CV Roadside Process, are expected to be in SAE J2735 format. The information exchanges in orange, specifically between the ASC Process and the CV Roadside Process and between the ASC Process and the traffic management system, are expected to conform to the NTCIP family of standards and are addressed by NTCIP 1202 v03. The information in cyan between the CV Roadside Process and the traffic management system allows a traffic management system to configure the RSU and is addressed by NTCIP 1218.

From a physical point of view, two possible physical architectures are considered in NTCIP 1202 v03, defined by where the CV Roadside Process is physically located.

In the first architecture, depicted in Figure 4, the CV Roadside Process is located in the RSU, which is a field-hardened computing device nearby, or within the same or a separate cabinet as the ASC. The V2X Radio depicted in Figure 4 may be a separate (standalone) physical device or integrated with a physical RSU device.

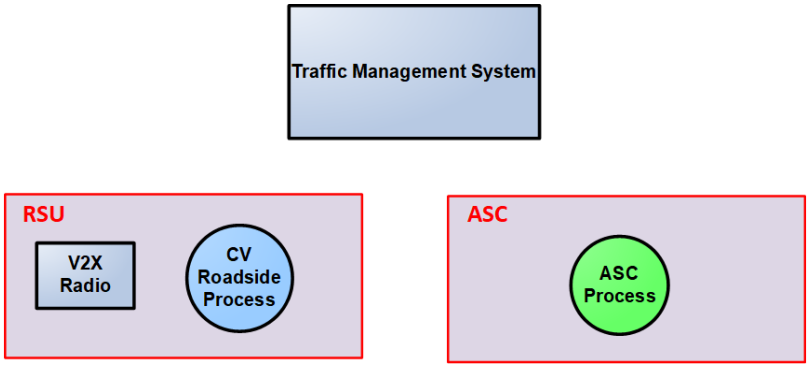


**Figure 4 Physical Architecture 1**

The second physical architecture, depicted in Figure 5, has the CV Roadside Process and ASC Process in the same physical device, such as an Advanced Traffic Controller. The CV Roadside Process might be located in a separate processor mounted on a card within the controller assembly.

Do Not Copy Without Written Permission © 2023 AASHTO / ITE / NEMA

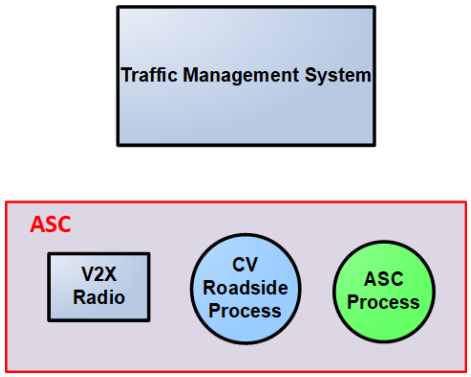


**Figure 5 Physical Architecture 2**

## 2.4 Architectural Needs

NTCIP 1202 v03 addresses the interface between an ASC and one or more management stations (e.g., central computers, laptops, RSUs, peer controller units). A management station needs to monitor the status of the ASC, manage the database in the ASC, and control the ASC. The management station also needs to retrieve data that has been collected by the ASC. After the management station has retrieved the data of interest, a manager can use the retrieved data to make decisions and initiate other events (such as changes to the ASC timing pattern) to better manage the transportation system.

The CV Roadside Process needs data from the ASC about current and future signal phasing and timing information, so the CV Roadside Process can forward this information to connected devices.

To enable communications between these components, the transportation system manager needs to establish a communication system that links the ASC with a management station. For some systems, the resources required for communications may be minimal, and as such, the system may be designed for constant polling; other systems may require significant resources for communicating with the ASC and, as such, the system may be designed to minimize data exchanges. When deploying an ASC, the system designer needs to consider which of the following operational environments need to be supported.

An ASC is expected to operate in the communications environment defined as follows.

### 2.4.1 Provide Live Data

The typical operational environment allows a management station to monitor and control the ASC by issuing requests (e.g., requests to access information, alter information, or control the device). In this environment, the ASC responds to requests from the management station (e.g., through the provision of live data, success/failure notice of information alteration, or success/failure of the command).

### 2.4.2 Provide Dynamic Object Data

Some operational environments have limited data capacity due to limitations in the data rates of the media and/or due to multiple entities or devices sharing the same communications channel. In such environments, dynamic objects provide the capability to group sets of data together so that data can be transmitted more efficiently over telecommunications networks, thereby conserving the limited data capacity of the channel. This capability reduces the upload and download times of data between a management station and an ASC. Several dynamic objects provide users with the capabilities to configure any dynamic objects with any functions in user-definable sequences to be transmitted.

© 2023 AASHTO / ITE / NEMA Do Not Copy Without Written Permission

### 2.4.3 Provide Block Data

Some operational environments have limited data capacity due to limitations in the data rates of the media and/or due to multiple entities or devices sharing the same communications channel. In such environments, block data provides the capability to group sets of data together so that data can be transmitted more efficiently over telecommunications networks, thereby conserving the limited data capacity of the channel. This capability reduces the upload and download times of data between a management station and an ASC, or an ASC with another device (e.g., CV Roadside Process). In contrast to dynamic objects, the block objects are ASC-specific, pre-defined blocks of data addressing different functional areas associated with ASCs.

### 2.4.4 Provide for Log Data Local Storage and Retrieval

In a typical operational environment, the ASC needs to provide logged data to the management station for diagnostic purposes, and for operational environments (e.g., dial-up links) that do not have always-on connections. For example, logged data may include the time when the cabinet door is opened. The event log needs to be cleared either on a last-in last-out basis or by the management station because of limited storage space in the ASC.

### 2.4.5 Provide for Database Management

Traffic signal controllers are safety-critical devices to manage the traffic movements for vehicles, pedestrians, bicycles, transit, and others that are intersecting roadways (or railroad crossings). To ensure that the data downloaded from a central system software to an ASC makes logical sense, consistency checks on the downloaded data need to be performed by the ASC. The user needs to therefore be able to manage the database by being able to open the database to write data, ensure that the downloaded data was received, command the ASC to perform a verification / consistency check the downloaded data, and close the database to make the downloaded data available to the operational aspects of the ASC. Additionally, should there be any errors, the user needs to be able to determine the source of the error within the downloaded data.

### 2.4.6 Condition-Based Exception Reporting

In some operational environments, it may be desirable to have the ASC automatically transmit data to the management station when certain conditions occur. Under this scenario, the manager can program the information to be automatically reported to the management station when a specified condition occurs. An example is a manager who wants to know when a cabinet door is opened, when the ASC goes to an error flash condition, or when a phase becomes active; these conditions can be programmed to cause the transmission of the alarm objects, thus providing the management station with information regarding the change of state at the ASC cabinet.

## 2.5 Features

Section 2.5 identifies and describes the various features that may be offered by the ASC. It is divided into the following:

a) Manage the ASC Configuration
b) Manage Signal Operations
c) Manage Detectors
d) Manage Connected Vehicles Interface
e) Backward Compatibility Features

### 2.5.1 Manage the ASC Configuration

This section identifies and describes the various features related to managing the configuration of the ASC. It consists of the following features:

Do Not Copy Without Written Permission © 2023 AASHTO / ITE / NEMA

a) Retrieve Device Identity
b) Manage Communications
c) Monitor Cabinet Environment
d) Monitor Power
e) Retrieve Operational Performance Data
f) Manage Auxiliary External Inputs/Outputs
g) Manage Database

#### 2.5.1.1 Retrieve Device Identity

A manager needs to manage basic information about the ASC. This information consists of its location (latitude and longitude) and the make, model, and version of the device components. The device components can be a hardware, software, or firmware component, and could be a physical or logical entity in nature. This feature allows the manager to verify the identity of the controller in the field and what software or firmware version is installed. This feature also allows the manager to retrieve a unique identifier of the device as provided by the device manufacturer.

#### 2.5.1.2 Manage Communications

A manager needs to manage each communications port in the ASC. This feature consists of enabling or disabling the communications ports, and configuring or retrieving the port address (e.g., IP address). This feature allows a manager to disable an unused communications port for security purposes or to reconfigure the ASC for a new communications media.

#### 2.5.1.3 Manage Cabinet Environment

A manager needs to monitor the controller cabinet operating environment. This feature allows a manager to monitor for unsafe operating environments for the ASC so proper precautions can be taken. An unsafe operating environment consists of an open controller cabinet door, high cabinet temperatures, or an indication that the cabinet fan has turned on.

#### 2.5.1.4 Monitor Power

A manager needs to monitor the power for the ASC. This feature assists the manager in determining whether the power sources for the ASC cabinet are suspect and need maintenance or whether the intersection is operating on an alternate power source. For example, some ASCs use AC power for their battery.

#### 2.5.1.5 Retrieve Operational Performance Data

A manager needs to retrieve operational data from the ASC for the analysis of the signal timing efficacy. The operational data consists of frequent snapshots of signal operations data and detector data and allows the manager to view the temporal relationship between signal indications and traveler arrivals. An example of this operational data is the Indiana Traffic Signal Hi Resolution Data Logger Enumerations. This feature provides a manager with the information to evaluate the performance of signal operations, such as the quality of progression of traffic along arterials, or measuring the amount of unused green time during a cycle. The manager may wish to monitor the operational data or store the operational data in a log for retrieval at a later time.

#### 2.5.1.6 Manage Auxiliary External Inputs/Outputs

A manager needs to monitor and control auxiliary external devices (i.e., non-signal control) through the ASC. This feature allows the manager to activate auxiliary external devices or functions that may be tied to other transportation operational needs. For example, the ASC may be co-located with a trail-blazing sign utilized for special events and not associated with traffic signal operations.

© 2023 AASHTO / ITE / NEMA Do Not Copy Without Written Permission

#### 2.5.1.7 Manage Database

A manager needs to manage the configuration and version of the database in the ASC. The database configuration and version allow a manager to determine if the ASC has the correct and expected version of the database.

### 2.5.2 Manage Signal Operations

This section identifies and describes the various features to monitor and control traffic signal operations. It consists of the following features:

a) Manage Signal Configuration
b) Monitor Signal Operations Status
c) Control Signal Operations

#### 2.5.2.1 Manage Signal Configuration

##### 2.5.2.1.1 Manage Controller Startup Functions

A manager needs to retrieve and configure the startup capabilities and functions of the ASC. This feature allows the manager to define the startup times upon powerup, set the backup time, and set the minimum clearance times for the ASC.

##### 2.5.2.1.2 Manage Phase Configurations

For a phase-based controller, a manager needs to retrieve and configure the phases for the ASC. This consists of setting the minimum durations, maximum durations, clearance times, allowable concurrent phases, and other phase-related features and options for all travel modes (vehicles, pedestrians, bicycles, special vehicles).

##### 2.5.2.1.3 Manage Coordination Configurations

A manager needs to retrieve and configure the coordination modes for the ASC. This consists of the allowable operational, correction, and force modes, and coordination point within a phase to be used for signal coordination.

##### 2.5.2.1.4 Manage Timing Patterns

A manager needs to retrieve and configure the timing patterns stored in the ASC. Each timing pattern defines a cycle length, splits, offsets, and the phase sequences. The manager may also specify a default timing pattern.

##### 2.5.2.1.5 Manage Splits Configurations

A manager needs to retrieve and configure the splits stored in the ASC. The information for each set of splits consists of the phase assignment, the coordinated phase, the split time, and the split mode.

##### 2.5.2.1.6 Manage Ring Configurations

For a phase-based controller, a manager needs to retrieve and configure the rings in the ASC. Each ring defines the sequence of phases for that ring.

Do Not Copy Without Written Permission © 2023 AASHTO / ITE / NEMA

#### 2.5.2.1.7 Manage Channel Configurations

A manager needs to retrieve and configure the channel parameters in the ASC. Each channel consists of the control source, the type of phase the channel is controlling (e.g., vehicle phase, pedestrian phase, bicycle phase, overlap), and its flash and dimming characteristics.

#### 2.5.2.1.8 Manage Overlap Configurations

For a phase-based controller, a manager needs to retrieve and configure the overlap functions in the ASC. For each overlap, this consists of the type of overlap operation, the included phases, the modifier phases, any overlap extensions, and clearance times.

#### 2.5.2.1.9 Manage Preempt Configurations

A manager needs to retrieve and configure the preempts in the ASC. Preempts are used to service special needs at an intersection, such as for a railroad crossing or emergency vehicles responding to an incident. This feature allows the manager to retrieve and configure the minimum durations, phase settings, outputs, and clearance times whenever a preempt signal is detected; configure how the controller enters into and exits out of preemption; and define the priority of different preempt inputs into the ASC. This feature also allows a manager to configure the ASC to enable or disable the preempt under certain conditions, such as time-of-day, or to configure the ASC to select alternate exit strategies based on input conditions.

#### 2.5.2.1.10 Manage Timing Pattern Scheduler

A manager needs to retrieve and configure the scheduler in the ASC to implement a timing pattern based on time. This feature allows the manager to configure the ASC to implement timing patterns for both controllers based on calendar days, days of the week, and/or times of day.

#### 2.5.2.1.11 Manage Action Scheduler

A manager needs to retrieve and configure the scheduler in the ASC to perform a function or a group of functions. The action scheduler allows a manager to activate an output, configure the ASC (e.g., max2), configure the ASC log, or program the condition-based exception reporting based on calendar days, days of the week, and/or times of day. For example, the manager may program the action scheduler to activate the special function output every weekday when a nearby school is in session and configure the ASC to operate in non-actuated mode during the same period of time. The manager may also configure the log not to record actuations, and to program the condition-based exception reporting not to report actuations during that same period of time.

#### 2.5.2.1.12 Manage I/O Mapping

A manager needs to retrieve and configure the input/output mapping in the ASC. This feature allows the manager to change the input and outputs for an ASC so unused inputs or outputs, as defined by a standard specification, can be used and configured as needed. This feature also allows the manager to reset the input/output mapping to a default configuration, and configure the conditions when changes to input/output mapping can be accepted by the ASC.

#### 2.5.2.1.13 Manage Intra-Cabinet Communications Configuration

A manager needs to retrieve and configure the ASC's intra-cabinet communications port. For NEMA TS 2 type controllers, this is the NEMA TS 2 Port 1 in the ASC and allows a manager to indicate if a device is present on Port 1. For controllers in an ITS Cabinet, this is Serial Bus 1.

© 2023 AASHTO / ITE / NEMA Do Not Copy Without Written Permission

#### 2.5.2.1.14 Manage ADA Support

A manager needs to retrieve and configure the ASC to support Accessible Pedestrian Signals (APS). This feature enables an ASC to provide information about pedestrian signal timing to pedestrians.

### 2.5.2.2 Monitor Signal Operations Status

This feature allows a manager to monitor the traffic signal operations and status of an ASC. It consists of the following sub-features.

a) Determine Controller Health
b) Determine Mode of Operation
c) Monitor Signal Indication
d) Monitor Phase Status
e) Monitor Ring Status
f) Monitor Channel Status
g) Monitor Overlap Status
h) Monitor Preempt Input State
i) Monitor Preempt State
j) Monitor Special Function Outputs
k) Monitor Timebase Action Status
l) Monitor Intra-Cabinet Communications Configuration

#### 2.5.2.2.1 Determine Controller Health

A manager needs to monitor the health of the ASC. This feature allows a manager to determine if the essential functions and elements of the ASC are operating properly. ASC system error conditions and faults to be monitored are processor stall conditions (timeouts), memory faults, task (i.e., process) failures, communication timeouts or errors from a management station, and suspect power problems. ASC operational error conditions and faults to be monitored are conflicts, cycle failures, and coordination failures.

#### 2.5.2.2.2 Determine Mode of Operation

This feature allows a manager to determine the current mode of operation in the ASC. It consists of the following sub-features.

##### 2.5.2.2.2.1 Monitor Unit-Wide General Operations

A manager needs to determine if the ASC as a unit is operational, provides unit-wide control status information, and monitors other unit-wide parameters such as automatic detector calls, dimming, and interconnect status.

##### 2.5.2.2.2.2 Monitor Flashing

A manager needs to determine if the ASC is in a flashing condition and the reason for the flashing condition. If a condition is detected in the controller assembly that may compromise public safety, the ASC generally reverts to a flash condition. Thus the manager needs to determine if the cause of a flash condition is normal (e.g., the ASC was commanded to flash) or if a safety critical condition was detected.

##### 2.5.2.2.2.3 Monitor Current Timing Pattern

A manager needs to retrieve information about the timing pattern, mode of operation, and its source (e.g., program entry, time base control, system interface) running in the ASC. The status needs to indicate the current timing pattern and mode of operation in effect, and the programmed timing pattern and mode of operation (what should be in effect).

Do Not Copy Without Written Permission © 2023 AASHTO / ITE / NEMA

#### 2.5.2.2.2.4 Monitor Current Cycle

A manager needs to retrieve information about the current timing pattern cycle in the ASC. This consists of the current split, its coordination state, the duration of time since the current cycle started, and the duration of time before the current phase ends.

#### 2.5.2.2.3 Monitor Signal Indication

A manager needs to retrieve the status of each signal indication configured in the ASC. This feature indicates if each signal indication is on, off, flashing, or dimmed. This feature allows a manager to view the signal indications on a map.

#### 2.5.2.2.4 Monitor Phase Status

For a phase-based controller, a manager needs to retrieve the status of each phase configured in the ASC. This feature indicates if each phase is active or not (including clearance intervals) and if there is an active vehicle or pedestrian call. This feature also indicates which phases are expected to be active after the termination of an active phase. This feature allows a manager to observe and review signal operations.

#### 2.5.2.2.5 Monitor Ring Status

For a phased-based controller, a manager needs to retrieve the status of each ring output configured in the ASC. This feature allows a manager to determine what state (minimum green, extension, yellow change, red clearance, red rest, etc.) and interval the ring is currently in.

#### 2.5.2.2.6 Monitor Channel Status

A manager needs to retrieve the status of each channel output configured in the ASC. This feature allows a manager to determine if each channel output is red, yellow, or green, and the current measured voltages and electrical current.

#### 2.5.2.2.7 Monitor Overlap Status

A manager needs to retrieve the status of each overlap configured in the ASC. This feature allows a manager to determine if each overlap is red, yellow, or green.

#### 2.5.2.2.8 Monitor Preempt Input State

A manager needs to retrieve the preempt input state for each preempt input configured in the ASC. This feature allows a manager to determine whether an input signal is active on each preempt input of an ASC.

#### 2.5.2.2.9 Monitor Preempt State

A manager needs to retrieve the status of the preempt state for each preempt input configured in the ASC. For each preempt input, this indicates if the preempt service has started, is being delayed, is linked to another preempt sequence, is overriding another preempt sequence, and is being overridden by another preempt sequence; the preempt interval (e.g., in dwell); and if the preempt is exiting out of preempt service.

© 2023 AASHTO / ITE / NEMA Do Not Copy Without Written Permission

#### 2.5.2.2.10 Monitor Special Function Outputs

A manager needs to retrieve if each special function output configured in the ASC is active. For example, an ASC near a school may use its special function outputs to turn on a flashing beacon to indicate a lower speed limit when a timing pattern associated with traffic arriving and leaving the school is in effect.

#### 2.5.2.2.11 Monitor Timebase Action Status

A manager needs to retrieve which timebase action entry is currently in effect in the ASC.

#### 2.5.2.2.12 Monitor Intra-Cabinet Communications Configuration

A manager needs to retrieve if the ASC's intra-cabinet communications port is online. For NEMA TS 2 type controllers, this is the NEMA TS 2 Port 1 in the ASC. For traffic signal controllers in an ITS Cabinet, this is Serial Bus 1.

### 2.5.2.3 Control Signal Operations

This feature allows a manager to control the signal operation of an ASC. It consists of the following sub-features:

a) Control ASC-Wide General Operations
b) Command Timing Pattern
c) Phase Requests
d) Activate Preempt
e) Control Ring Operations
f) Activate Special Function Output
g) Control Frame 40
h) Activate Action Plan
i) Remote Manual Control

#### 2.5.2.3.1 Control ASC-Wide General Operations

A manager needs to control ASC-wide operational features within the ASC such as external minimum recalls, automatic detector calls, dimming, interconnect, and enabling/disabling remote commands to the ASC.

#### 2.5.2.3.2 Command Timing Pattern

A manager needs to command the ASC to a mode of operation, activate a timing pattern, or activate a signal plan. This feature allows a manager to command the ASC to a standby mode, to free mode, or to flash, and to establish the system reference point.

#### 2.5.2.3.3 Phase Requests

For a phased-based controller, a manager needs to control the duration and inclusion of phases for the current (signal) cycle of an ASC. This feature consists of the capability to omit phases, hold phases, force phases off, and place calls.

#### 2.5.2.3.4 Activate Preempt

A manager needs to activate a preempt input configured in the ASC. This feature allows a manager to force the ASC to request a preempt sequence state for diagnostic purposes or during special events.

Do Not Copy Without Written Permission © 2023 AASHTO / ITE / NEMA

#### 2.5.2.3.5 Control Ring Operations

A manager needs to control ring operations of an ASC. This feature allows a manager to stop the ring timing, activate a force off, or force the ring to rest in red.

#### 2.5.2.3.6 Activate Special Function Output

A manager needs to activate a special function output configured in an ASC. This special function output may be used to activate other devices, such as flashing beacon or a blank out sign associated with a timing pattern.

#### 2.5.2.3.7 Control Frame 40

For NEMA TS 2 type controllers, a manager needs to enable or disable Frame 40 messages from the ASC to a device at the Port 1 address. Frame 40 is used to poll the secondary stations for a secondary to secondary message exchange.

#### 2.5.2.3.8 Activate Action Plan

A manager needs to activate a pre-defined group of functions configured in an ASC. This feature allows a manager to command the ASC to perform a group of functions. The functions consist of allowing a manager to activate an output, configure the ASC (e.g., max2), configure the ASC log, or program the condition-based exception reporting.

#### 2.5.2.3.9 Remote Manual Control

A manager needs to command the ASC to remotely advance the signal controller through the phases or intervals. This feature allows a manager to remotely and manually control a signal controller. Examples of when a manager may wish to manually control an intersection would be for special events, such as sporting events, parades, and large concerts, where traffic congestion is far in excess of normal volumes.

### 2.5.3 Manage Detectors

Section 2.5.3 identifies and describes the various features to monitor and control the detector inputs to the ASC. A detector may be used to identify demand for signal service. The user needs to monitor and control detector inputs consist of the following features:

a) Manage Detector Configuration
b) Monitor Detector Status
c) Monitor Detector Health
d) Control Detectors
e) Manage Detector Data

#### 2.5.3.1 Manage Detector Configuration

A manager needs to retrieve and configure the detectors connected to the ASC. This feature allows a manager to define the travel mode being detected (vehicle, pedestrian, transit, and bicycle), select phase assignments, define capabilities, and define the criteria for detector faults. The criteria for a detector fault consists of the amount of time between detector actuations, amount of time with continuous actuations, and excessive actuations over a period of time.

#### 2.5.3.2 Monitor Detector Status

A manager needs to monitor activations for detectors configured in the ASC. This feature allows a manager to determine the presence of vehicles, pedestrians, or other travelers on the roadway.

© 2023 AASHTO / ITE / NEMA Do Not Copy Without Written Permission

#### 2.5.3.3 Monitor Detector Health

A manager needs to monitor the health of the detectors configured in the ASC. This feature allows a manager to determine if the detectors are operating correctly or if a fault has been detected so maintenance personnel can be dispatched to repair the detectors if necessary.

#### 2.5.3.4 Control Detectors

A manager needs to control a detector configured in the ASC. This feature allows a manager to clear a detector fault and place the detector back in service, and to activate a call on a detector.

#### 2.5.3.5 Manage Detector Data

A manager needs to set up the ASC to collect data from detectors configured in the ASC. This feature allows a manager to retrieve reports from the ASC on the data measured by the detectors over a user-defined period. This data consists of volumes, occupancies, and speeds as appropriate.

### 2.5.4 Manage Connected Vehicles Interface

This section identifies and describes the various features that support the interface with a CV Roadside Process in a connected vehicle environment. The connected vehicle environment is expected to use the SAE J2735 – V2X Communications Message Set Dictionary as the information standard. Several messages in SAE J2735 are pertinent to ASCs and are addressed within NTCIP 1202 v03. These messages are:

a) **Signal Phase and Timing (SPaT) Message.** A broadcasted message providing signal phase and timing information for one or more ASC(s) indicating the state of each permitted intersection maneuver and when an active maneuver terminates. The current signal status is also sent. This message is intended for connected devices in the broadcast vicinity of an ASC.
b) **MAP Message.** A broadcasted message providing map information, such as intersection roadway geometry, including lane information and allowable traveler (e.g., vehicles, pedestrians, bicycles, special vehicles) maneuvers, as well as the mapping between the SPaT data provided by the ASC and the intersection roadway geometry.
c) **Basic Safety Message.** A broadcasted message providing “basic” information about the location and movements of a “connected” vehicle, including its current location, speed, acceleration, and direction of travel.
d) **Personal Safety Message.** A broadcasted message providing “basic” information about the location and movements of a “connected” mobile device carried by a Vulnerable Road User (VRU), such as a pedestrian, bicyclist, or road worker, or integrated in a device used by the VRU, such as a bicycle or wheelchair.

The features offered by an ASC to support the connected vehicle environment are organized by interface:

a) the interface between a management station and the ASC;
b) the interface between a management station and the CV Roadside Process [Deprecated]; and
c) the interface between the ASC and the CV Roadside Process.

#### 2.5.4.1 Connected Vehicle Manager: Management Station–ASC Interface

The following subsections identify and describe the various features that may be offered between a management station and an ASC. These features are:

a) Manage RSU Interface
b) Manage RSU Interface Watchdog
c) Manage Signal Phase and Timing Data
d) Exchange Connected Devices Data for Operational Performance Data

 © 2023 AASHTO / ITE / NEMA

#### 2.5.4.1.1 Manage RSU Interface

A manager needs to retrieve and configure the interface between the ASC and an RSU. This feature allows a manager to configure operational control information of how often information is exchanged between the ASC and an RSU.

#### 2.5.4.1.2 Manage RSU Interface Watchdog

A manager needs to retrieve and configure an RSU watchdog within the ASC. This feature allows the ASC to monitor the period of time elapsed between data exchanges across an ASC and RSU interface. If the time elapsed exceeds a configured threshold, the ASC hardware is reset to clear the potential stall condition.

#### 2.5.4.1.3 Manage Signal Phase and Timing Data

Some of the key applications that have been developed within the connected vehicle environment are related to intersection safety. For signalized intersections, this involves an RSU broadcasting SPaT messages, as defined by SAE J2735, to connected vehicles in the vicinity. Some of the data in the SPaT message originates from the ASC, so the ASC needs to exchange this data with the RSU. However, a manager in a traffic management center needs to monitor what data is being provided to the RSU to broadcast to connected devices. This feature allows the manager to manage and view the contents of the signal phase and timing data that the ASC is exchanging with the RSU, so the RSU may generate and broadcast SPaT messages, as defined by SAE J2735.

#### 2.5.4.1.4 Exchange Connected Devices Data for Operational Performance Data

A manager needs to retrieve data about connected devices traversing the roadway in the vicinity of the ASC. This data consists of frequent snapshots about connected devices in the vicinity of the ASC and allows the manager to view the temporal relationship between signal indications and traveler arrivals. This feature allows a manager to integrate phase and timing information with data from connected devices to produce performance metrics related to intersection demand, safety, and operations.

### 2.5.4.2 Connected Vehicle Manager: Management Station – CV Roadside Process Interface [Deprecated]

The following subsections identify and describe the various features that may be offered between a management station and a CV Roadside Process. These features are:

a) Manage Roadway Geometrics Information
b) Manage Movement Configuration for Connected Devices
c) Manage Collection of Connected Devices Data
d) Monitor Broadcasted MAP Messages
e) Monitor Broadcasted SPaT Messages

Note: The user needs in Section 2.5.4.2.x are now addressed in NTCIP 1218, Object Definitions for Roadside Units and are thus deprecated from NTCIP 1202.

#### 2.5.4.2.1 Manage Roadway Geometrics Information [Deprecated]

A manager needs to retrieve and configure the roadway geometry plans in the CV Roadside Process. Each roadway geometry plan defines the pathways where movements are permitted at the intersection when that roadway geometry plan is in effect. This feature allows a manager to provide a CV Roadside Process with information needed to broadcast the MAP message to connected devices. This information includes the intersection identifier, the geographic path of each travel lane approaching and exiting the intersection, and the width of each pathway.

© 2023 AASHTO / ITE / NEMA Do Not Copy Without Written Permission

#### 2.5.4.2.2 Manage Movement Configuration for Connected Devices [Deprecated]

A manager needs to retrieve and configure the CV Roadside Process with a mapping between the signal indications configured in the ASC with the permitted movements that are broadcasted in a SPaT (and MAP) message by the CV Roadside Process. This feature defines the association between each signal indication configured in the ASC with a permitted pathway, possibly defined in the roadway geometry plan in effect. This feature allows the manager to provide a CV Roadside Process with information that may be needed to broadcast the MAP (and SPaT) message to connected devices. This information may consist of the intersection identifier, the permitted movement for each pathway defined in the roadway geometry plan, and the association between a signal indication and a pathway.

> Note: This user need is designed around the concept that the signal operations for an ASC depend on “awareness” of each signal indication to movement mapping that the ASC is programmed for, and each mapping is assigned an identifier. When the mapping in effect changes, the ASC informs the CV Roadside Process by indicating a new identifier is in effect (see 2.5.4.2.8). So, an identifier for each signal indication to movement mapping is required.

#### 2.5.4.2.3 Manage Collection of Connected Devices Data [Deprecated]

A manager needs to configure a CV Roadside Process to forward the presence of connected devices on the roadway to the ASC. This feature allows a manager to configure the CV Roadside Process to use information in the BSMs and PSMs received by the CV Roadside Process as a call for actuated movements or to determine the demand for specific movements. This feature also allows a CV Roadside Process to filter the information exchanged with the ASC, based on the travel mode (e.g., vehicle, pedestrian, bicycle, special vehicle) or an event. Information extracted from the BSMs and PSMs includes location of the connected device, direction of travel, speed, and travel mode (e.g., vehicle, pedestrian, bicycle, special vehicle), direction and the location of the connected device.

#### 2.5.4.2.4 Monitor Broadcasted MAP Messages [Deprecated]

A manager needs to monitor the data included in a MAP data message broadcasted to connected devices. The MAP data message is expected to be broadcasted in concert with the broadcast of the SPaT message to connected devices in the vicinity of a signalized intersection. This feature allows the manager to view the contents of the MAP data message being broadcasted by the CV Roadside Process in support of the SPaT message that is also being broadcasted.

#### 2.5.4.2.5 Monitor Broadcasted SPaT Messages [Deprecated]

A manager needs to monitor the data included in a SPaT message broadcasted to connected devices. The SPaT message is expected to broadcast in concert with the broadcast of the MAP data message to connected devices in the vicinity of a signalized intersection. This feature allows the manager to view the contents of the SPaT message broadcasted by the CV Roadside Process.

### 2.5.4.3 Connected Vehicle Manager: ASC – CV Roadside Process Interface

The following subsections identify and describe the various features that may be offered between an ASC and a CV Roadside Process. These features are:

a) Exchange Current and Next Movement Information
b) Exchange Next Occurrence of a Movement
c) Exchange Presence of Connected Devices
d) Exchange Roadway Geometrics Information

 © 2023 AASHTO / ITE / NEMA

#### 2.5.4.3.1 Exchange Current and Next Movement Information

An ASC needs to exchange with a CV Roadside Process what the current state of each movement is and when that state will change. This feature allows the ASC to exchange information about when each state of each movement starts and ends. The CV Roadside Process uses this information for its safety, mobility, and environmental applications and to broadcast SPaT messages to connected vehicles and mobile devices. An ASC operating in actuated mode might only be able to provide a time period when an active movement is to terminate. An ASC also may not be able to provide information about the next active movement until the end of a current active movement.

#### 2.5.4.3.2 Exchange Next Occurrence of a Movement

An ASC needs to exchange with a CV Roadside Process what the future states of each movement will be and when those states will start and end. One of the applications envisioned for the connected vehicle environment is Connected Eco-Driving. This application provides customized real-time driving advice to drivers so that they can adjust their driving behavior to save fuel and reduce emissions (from the Connected Vehicles Reference Implementation Architecture (CVRIA)). This may include a CV application in the CV Roadside Process providing recommendations for an optimal speed to equipped vehicles so vehicles arrive at the intersection when the signal indication for their desired movement is green, reducing fuel consumption and emissions created when a vehicle unnecessarily brakes and accelerates.

#### 2.5.4.3.3 Exchange Presence of Connected Devices

An ASC needs to exchange with a CV Roadside Process the presence of connected devices on the roadway around the ASC. This feature allows the ASC to exchange with the CV Roadside Process information that can be used as a call for actuated movements or to determine the demand for specific movements. The Basic Safety Message and the Personal Safety Message are the primary sources of presence information that are received by a CV Roadside Process located near the ASC and then exchanged with the ASC.

#### 2.5.4.3.4 Exchange Roadway Geometrics Information

An ASC needs to exchange with a CV Roadside Process the roadway geometry plan that is currently in effect at the intersection. Each roadway geometry plan may define the pathways where movements are permitted at the intersection when that roadway geometry plan is in effect. A pathway may be a vehicle lane, a pedestrian crossing, a bicycle lane, or a transit right of way. This feature allows the ASC to exchange with the CV Roadside Process when the roadway geometry plan in effect in the ASC has changed. The ASC uses this information to confirm that the roadway geometry plan is compatible with the signal operations timing plan in effect.

For example, an ASC may be programmed to use signal timing plans with an intersection roadway geometry with one-way approaches into the intersection. However, if the intersection roadway has been changed to two-way traffic, the ASC needs to confirm that the signal timing plan in effect is still compatible with the new roadway geometry plan that the CV Roadside Process is broadcasting to travelers.

#### 2.5.4.3.5 Exchange Movement Configuration

An ASC needs to exchange with the CV Roadside Process the signal indication to movement mapping currently in effect at the intersection. Each signal indication to movement mapping defines what movements are permitted for each pathway at the intersection when that signal indication to movement mapping is in effect. This feature allows the ASC to exchange with the CV Roadside Process when the signal indication to movement mapping in the ASC has changed, such as when travel in a lane has been reversed.

© 2023 AASHTO / ITE / NEMA Do Not Copy Without Written Permission

For example, an ASC with a reversible lane traversing the intersection may have two signal indication to movement mappings, one signal indication to movement mapping to associate a signal indication to the reversible lane and the adjacent lane in the same direction of travel, and a second signal indication to movement mapping when the permitted vehicle movement in the reversible lane is in the opposite direction to the adjacent lane (the subject signal indication is associated only to the adjacent lane).

### 2.5.5 Backward Compatibility Features

The following sub-features were modified within NTCIP 1202 v02 and needed to be specifically spelled out to achieve backward compatibility for certain features within an ASC conforming to NTCIP 1202 v03.

#### 2.5.5.1 Backward Compatible with NTCIP 1202 v01

A newer transportation system component needs to communicate with other components that conform to NTCIP 1202 v01.

#### 2.5.5.2 Backward Compatible with NTCIP 1202 v02

A newer transportation system component needs to communicate with other components that conform to NTCIP 1202 v02. However, NTCIP 1202 v03 is fully backward compatible with NTCIP 1202 v02.

#### 2.5.5.3 Backward Compatible with NTCIP 1202 v03A

A newer transportation system component needs to communicate with other components that conform to NTCIP 1202 v03A.

## 2.6 Security

Section 2.6 identifies and describes the various security features that may be offered by the ASC. It consists of the following sub-features:

a) Manage Authentication
b) Manage Accessibility
c) Manage Users
d) Log User Access
e) Manage Security Between ASC and Other Interfaces

Note: Users should be aware that at the time of this publication, NTCIP 1202 v03 uses SNMPv1 as referenced by NTCIP 1103 v03, a normative reference. Later versions of SNMP provide additional security but are out of scope for this particular project; thus, an agency is encouraged to consider security implications.

### 2.6.1 Manage Authentication

A manager needs to retrieve and configure the ASC to authenticate requests from a manager. This feature allows a manager to authenticate users and passwords in the ASC.

### 2.6.2 Manage Accessibility

A manager needs to retrieve and configure the ASC to limit access to specific information in the ASC based on the permissions assigned by the manager.

### 2.6.3 Manage Users

A manager needs to retrieve and configure a user’s profile in the ASC. Each user profile consists of a user, its password, and its access rights.

Do Not Copy Without Written Permission © 2023 AASHTO / ITE / NEMA

### 2.6.4 Log User Access

A manager needs to retrieve and configure the ASC to log when and what requests were made by a manager. This feature allows a manager to track who made what changes to the ASC security configuration, or commanded the ASC to perform a security-related function. This feature is only accessible by a system administrator.

### 2.6.5 Manage Security Between ASC and Other Interfaces

A manager needs to manage security between the ASC and other interfaces, such as the RSU.

## 2.7 Operational Policies and Constraints

The ASC WG recognizes that the following constraints may apply.

- Public agencies may implement operational policies, rules, or regulations that take precedence over the use of this standard. No governmental operational policies, rules, or regulations shall be violated when applying NTCIP 1202.
- It is the operational policy of some agencies that authorized personnel is/are present at the physical location of the ASC, before an ASC accepts a change to the configuration of the ASC. This operational policy is usually enforced by requiring that the door of the controller cabinet containing the ASC is open.
- The operation and maintenance of the connected signalized intersection uses the traffic signal timing principles and practices that have guided signal timing operations for many decades. Many of these principles and practices have been studied, researched, and time tested. Significant changes to these principles and practices may require additional studies and research before they can be adopted and deployed.

## 2.8 Relationship to the ITS National Architecture [Informative]

Architecture Reference for Cooperative and Intelligent Transportation, known as ARC-IT, combines the National ITS Architecture (NITSA) and the Connected Vehicle Reference Implementation Architecture (CVRIA). NTCIP 1202 v03 addresses many ARC-IT flows associated with the operation of an ASC.

NTCIP 1202 v03 addresses fourteen (14) ARC-IT flows between a Traffic Management Center (TMC) and a Traffic Signal Controller (ITS Roadway Equipment (IRE)) that are associated with the operation of an ASC. These flows are:

a) **Mixed Use Safety Warning Control:** Configuration and control of equipment that monitors and manages mixed-use crossings and provides visual displays and warnings to drivers when non-motorized users are occupying a crosswalk or other mixed-use path crossing.
b) **Mixed Use Safety Warning Status:** Current operational status and state of pedestrian crossings and other mixed-use path crossing warning systems.
c) **Rail Crossing Control Data:** Data required for Highway-Rail Intersection (HRI) information transmitted at railroad grade crossings and within railroad operations.
d) **Rail Crossing Request:** A request for highway-rail intersection status or a specific control request intended to modify HRI operation.
e) **Rail Crossing Status:** Status of the highway-rail intersection equipment including both the current state or mode of operation and the current equipment condition.
f) **Right-of-Way Request Notification:** Notice that a request has occurred for signal prioritization, signal preemption, pedestrian call, multi-modal crossing activation, or other sources for right-of-way requests.
g) **Signal Control Commands:** Control of traffic signal controllers or field masters including clock synchronization.
h) **Signal Control Device Configuration:** Data used to configure traffic signal control equipment including local controllers and system masters.

© 2023 AASHTO / ITE / NEMA Do Not Copy Without Written Permission

i) **Signal Control Plans:** Traffic signal timing parameters including minimum green time and interval durations for basic operation and cycle length, splits, offset, phase sequence, etc., for coordinated systems.
j) **Signal Control Status:** Operational and status data of traffic signal control equipment including operating conditions and current indications.
k) **Signal Fault Data:** Faults from traffic signal control equipment.
l) **Signal System Configuration:** Data used to configure traffic signal systems including configuring control sections and mode of operation (time-based or traffic responsive).
m) **Traffic Flow:** Raw and/or processed traffic detector data that allows derivation of traffic flow variables (e.g., speed, volume, and density measures) and associated information (e.g., congestion, potential incidents). This flow includes the traffic data and the operational status of the traffic detectors.
n) **Traffic Sensor Control:** Information used to configure and control traffic sensor systems such as inductive loop detectors and machine vision sensors.

NTCIP 1202 v03 also addresses fifteen (15) ARC-IT flows between a Traffic Signal Controller, represented as an ITS Roadway Equipment (IRE), and an RSU, represented as a Connected Vehicle Roadside Equipment (CVRE). These flows are:

a) **Arriving Train Information:** Information for a train approaching a highway-rail intersection that may include direction and allow calculation of approximate arrival time and closure duration.
b) **Conflict Monitor Status:** A control flow that supports failsafe operation in the event that a conflict is detected that requires the RSE to enter a failsafe operating mode.
c) **Intersection Control Status:** Status data provided by the traffic signal controller including phase information, alarm status, and priority/preempt status.
d) **Intersection Infringement Info:** Vehicle path information sent by a vehicle that is violating the stop bar at an intersection. This flow includes the vehicle's position, heading, speed, acceleration, transmission, steering-wheel angle, braking status, size information, and trajectory.
e) **Intersection Status Monitoring:** Current signal phase and timing information for all lanes at a signalized intersection. This flow identifies monitoring of communications by a receiver at the intersection to support monitoring for conflicts between actual signal states and RSE communications about those states.
f) **ITS Roadway Equipment Information:** This general flow represents the information provided to the RSU by local field devices. This includes intersection status, environmental sensor data, and signage data.
g) **Mixed Use Crossing Status:** Current pedestrian and other non-motorized user locations including an indication of whether the call button has been activated, the current state of the mixed-use crossing signal, and information indicating whether non-motorized users are currently occupying the crosswalk.
h) **Personal Location Information:** Pedestrian, bicyclist, and other non-motorized user locations at an intersection as detected and reported by an RSE.
i) **Signal Preemption Request:** Direct request for preemption to a traffic signal controller that results in preemption of the current control plan and grants right-of-way to the requesting vehicle. This flow identifies the required phase and timing of the preemption. This flow may also cancel the preemption request (e.g., when the requesting vehicle clears the intersection).
j) **Signal Priority Service Request:** A service request for vehicle priority issued to a traffic signal controller that results in green extension or other accommodation for the priority vehicle, within the current signal timing plan. The request includes the desired time and duration of service. This flow also allows the RSE to cancel a previously issued request for priority.
k) **Signal Service Request:** A call for service or extension for a signal control phase that is issued by the RSE for connected vehicles approaching an intersection and/or pedestrians at a crosswalk. This flow identifies the desired phase and service time.
l) **Track Status:** Current status of the wayside equipment and notification of an arriving train.
m) **Traffic Gap Information:** Measured gap to the next approaching vehicle per lane and direction of travel.

Do Not Copy Without Written Permission © 2023 AASHTO / ITE / NEMA

n) **Traffic Situation Data:** Current, aggregate traffic data collected from connected vehicles that can be used to supplement or replace information collected by roadside traffic detectors. It includes raw and/or processed reported vehicle speeds, counts, and other derived measures. Raw and/or filtered vehicle control events may also be included to support incident detection.
o) **Vehicle Entries and Exit:** Information exchanged between an RSE and ITS Roadway Equipment (ASC) that supports detection of non-equipped vehicles in an automated lane, low emissions zone, or other facility where V2I communications are used to monitor vehicles at entry or exit points. This exchange also supports identification of non-equipped vehicles where an RSE is used for payment collection. This generic exchange can be implemented by any approach that compares vehicle detections with V2I communications by the RSE to identify vehicles that are not equipped or are otherwise unable to communicate with the RSE.

© 2023 AASHTO / ITE / NEMA Do Not Copy Without Written Permission

# Section 3
# Functional Requirements [Normative]

Section 3 defines the Functional Requirements based on the user needs identified in the Concept of Operations (see Section 2). Section 3 includes:

a) A tutorial.
b) **Protocol Requirements List (PRL):** A Functional Requirement is a requirement of a given function and therefore is only required to be implemented if the associated functionality (e.g., user need) is selected through the use of the PRL. The PRL also indicates which of the items are mandatory, conditional, or optional. The PRL can be used by procurement personnel to specify the desired features of an ASC system or can be used by a manufacturer to document the features supported by their implementation.
c) **Architectural Requirements:** These are requirements related to the architectural needs defined in Section 2.4.
d) **Data Exchange and Operational Environment Requirements:** These are requirements related to the features identified in Section 2.5 that can be realized through a data exchange. For example, this includes the requirement to be able to monitor what signal indications are active.
e) **Supplemental Non-Communications Requirements:** These are additional requirements derived from the Concept of Operations that do not fall into one of the above two categories. For example, they include requirements related to performance requirements.
f) **Generic Requirements:** There are requirements that are generic to all NTCIP field devices. For example, clock synchronization of devices is a requirement that is considered generic to all NTCIP devices. These requirements can be found in Annex G.

Section 3 is intended for all readers, including:

a) Transportation operations managers
b) Transportation operations personnel
c) Transportation engineers
d) System integrators
e) Device manufacturers

For the first three categories of readers, Section 3 is useful in understanding the details that NTCIP 1202 v03 requires of an ASC. For these readers, Section 3.3.3 is particularly useful in preparing procurement specifications and assist in mapping the various rows of this table to the more detailed text contained within the other sections.

For the last two categories of readers, this section is useful to fully understand what is required of equipment meeting this interface standard. The table in Section 3.3.3 may be used to document the capabilities of their implementations.

## 3.1 Tutorial [Informative]

This Functional Requirements section defines the formal requirements that are intended to satisfy the user needs identified in Section 2. This is achieved through the development of a PRL that traces each user need to one or more requirements defined in this section. The details of each requirement are then presented following the PRL. The functional requirements are presented in three broad categories as follows:

Do Not Copy Without Written Permission © 2023 AASHTO / ITE / NEMA

a) **Architectural Requirements:** These requirements define the required behavior of the system in exchanging data across the communications interface, including any restrictions to general architectural requirements, based upon the architectural needs identified in the Concept of Operations.
b) **Data Exchange Requirements:** These requirements define the required behavior of the system in exchanging data across the communications interface based upon the features identified in the Concept of Operations.
c) **Supplemental Requirements:** These requirements define additional requirements of the system that are derived from the architectural and/or data exchange requirements, but are not themselves architectural or data exchange requirements. A given supplemental requirement may relate to multiple architectural and/or data exchange requirements. Supplemental requirements include capabilities of the equipment (e.g., service processing or clearing expired priority requests).

### 3.2 Scope of the Interface [Informative]

<In the opinion of the responsible NTCIP working group, this section does not apply in the context of NTCIP 1202 v03.>

### 3.3 Protocol Requirements List (PRL)

The PRL, provided in Table 5 defined in Section 3.3.3, maps the user needs defined in Section 2 to the requirements defined in Section 3. The PRL can be used by:

a) A user or specification writer to indicate which requirements are to be implemented in a project-specific implementation.
b) The protocol implementer, as a checklist to reduce the risk of failure to conform to the standard through oversight.
c) The supplier and user, as a detailed indication of the capabilities of the implementation.
d) The user, as a basis for initially checking the potential interoperability with another implementation.

#### 3.3.1 Notation [Informative]

The following notations and symbols are used to indicate status and conditional status in the PRL within all NTCIP standards. Not all of these notations and symbols may be used within NTCIP 1202 v03.

##### 3.3.1.1 Conformance Symbols

The symbols in Table 1 are used to indicate status under the Conformance column in the PRL.

**Table 1 Conformance Symbols**

| Symbol | Status |
|---|---|
| M | Mandatory |
| M.# | Support of every item of the group labeled by the same numeral # is required, but only one is active at a time |
| O | Optional |
| O.# (range) | Part of an option group. Support of the number of items indicated by the '(range)' is required from all options labeled with the same numeral # |
| C | Conditional |
| NA | Not-applicable (i.e., logically impossible in the scope of the standard) |
| X | Excluded or prohibited |

© 2023 AASHTO / ITE / NEMA Do Not Copy Without Written Permission

The O.# (range) notation is used to show a set of selectable options (e.g., O.2 (1..*) would indicate that one or more of the option group 2 options shall be implemented). Two-character combinations are used for dynamic requirements. In this case, the first character refers to the static (implementation) status, and the second refers to the dynamic (use); thus, “MO” means “mandatory to be implemented, optional to be used.”

#### 3.3.1.2 Conditional Status Notation

The predicate notations in Table 2 may be used.

**Table 2 Conditional Status Notation**

| Predicate | Notation |
|---|---|
| <predicate>: | This notation introduces a single item that is conditional on the <predicate>. |
| <predicate>:: | This notation introduces a table or a group of tables, all of which are conditional on the <predicate>. |
| (predicate) | This notation introduces the first occurrence of the predicate. The feature associated with this notation is the base feature for all options that have this predicate in their conformance column. |

The <predicate>: notation means that the status following it applies only when the PRL states that the feature or features identified by the predicate are supported. In the simplest case, <predicate> is the identifying tag of a single PRL item. The <predicate> notation may precede a table or group of tables in a section or subsection. When the group predicate is true, then the associated section shall be completed. The symbol <predicate> also may be a Boolean expression composed of several indices. “AND,” “OR,” and “NOT” shall be used to indicate the Boolean logical operations.

The predicates used in NTCIP 1202 v03 map to the sections indicated in Table 3.

**Table 3 Predicate Mapping to NTCIP 1202 v03 Section**

| Predicate | Section |
|---|---|
| 332 | 2.3.1.a |
| AdvGrWarn | 3.5.2.1.2.1.47 |
| AdvRdWarn | 3.5.2.1.2.1.49 |
| AntiStream | H.1.1.10.6.6 |
| BackupUD | 3.5.2.1.1.3 |
| Bicycle | 3.5.2.1.2.1.53 |
| Coord | 2.5.2.1.3 |
| Channel | 2.5.2.1.7 |
| CV | 2.5.4 |
| Detector | 2.5.3.1 |
| Dimming | 3.5.2.2.2.7 |
| DST | H.1.1.5.6 |
| Humidity | 3.5.1.3.6 |
| ITS | 2.3.1.e |
| Overlap | 2.5.2.1.8 |
| MvtConflict | 3.5.4.1.3.6.4.7 |
| MvtQueue | 3.5.4.1.3.6.4.6 |
| Perform | 2.5.1.5 |
| PhsCtrl | 2.5.2.3.3 |
| Power | 2.5.1.4 |
| Preempt | 2.5.2.1.9 |

Do Not Copy Without Written Permission © 2023 AASHTO / ITE / NEMA

| Predicate | Section |
|---|---|
| preemptExit | 3.5.2.1.9.1.15 |
| preemptQueue | 3.5.2.1.9.1.16.3 |
| Ring | 2.5.2.1.6 |
| Scheduler | 2.5.2.1.10 |
| SpdAdvice | 3.5.4.1.3.6.5.1 |
| SpecialFunc | 2.5.2.2.10 |
| Speed | 3.5.3.1.1.1.3 |
| Temp | 3.5.1.3.5 |
| TimeZone | H.1.1.5.5 |
| Transit | 3.5.2.1.2.1.63 |
| Traps | 2.4.6 |
| TrapAck | H.1.1.10.6.1 |
| TrapQueue | H.1.1.10.6.3 |
| TS1 | 2.3.1.b |
| TS2-1 | 2.3.1.d |
| TS2-2 | 2.3.1.c |
| Unit | 2.5.2.2.2.1 |
| UPS | 3.5.1.4.3 |
| Watch | H.1.1.10.2.2 |

#### 3.3.1.3 Support Column Symbols

The Support column in the PRL can be used by a procurement specification to identify the required features for the given procurement or by an implementer to identify which features have been implemented. In either case, the user circles the appropriate answer (Yes, No, or N/A) in the support column:

**Table 4 Support Column Entries**

| Entry | Identifier |
|---|---|
| Yes | Supported by the implementation |
| No | Not supported by the implementation |
| N/A | Not applicable |

### 3.3.2 Instructions for Completing the PRL [Informative]

In the “Support” column, each response shall be selected either from the indicated set of responses (for example: Yes / No / NA), or it shall reference additional items that are to be attached (for example, list of traffic signal controllers to be supported by an implementation).

If a conditional requirement is inapplicable, use the Not Applicable (NA) choice. If a mandatory requirement is not satisfied, exception information shall be supplied by entering a reference Xi, where i is a unique identifier, to an accompanying rationale for the non-conformance. When the status is expressed as a two-character combination (as defined in 3.3.1.1 above), the response shall address each element of the requirement; e.g., for the requirement “mo,” the possible compliant responses are “yy” or “yn.”

> Note: A specification can allow for flexibility in a deliverable by leaving the selection in the Support column blank for a given row.

#### 3.3.2.1 Conformance Definition

To claim “Conformance” to NTCIP 1202 v03, the vendor shall minimally fulfill the mandatory requirements as identified in the PRL table (see Table 5).

© 2023 AASHTO / ITE / NEMA Do Not Copy Without Written Permission

> Note: The reader and user of NTCIP 1202 v03 are advised that “conformance” to NTCIP 1202 v03 should not be confused with “compliance” to a specification. NTCIP 1202 v03 is as broad as possible to allow a very simple ASC implementation to be “conformant” to NTCIP 1202 v03. An agency specification needs to identify the requirements of a particular project and needs to require the support of those requirements. A specification writer is advised to match the requirements of a project with the corresponding standardized requirements defined in NTCIP 1202 v03 to achieve interoperability. This means that functions and requirements defined as “optional” in NTCIP 1202 v03 might need to be selected in a specification (in effect made “mandatory” for the project-specific specification).

A conformant device may offer additional (optional) features, as long as they are conformant with the requirements of NTCIP 1202 v03 and the standards it references (e.g., NTCIP 1201 v03 and NTCIP 2301 v02). For example, to claim conformance to additional features, an implementation shall conform to all of the mandatory and selected optional requirements that trace to the subject user needs in the PRL, AND shall fulfill the requirement by using all of the dialogs and data elements traced to the subject requirement in the Requirements Traceability Matrix (RTM) in Annex A.

A device may also support data that has not been defined by NTCIP 1202 v03; however, when exchanged via one of the NTCIP 2301 v02 protocols, the data shall be properly registered with a valid OBJECT IDENTIFIER under the Global ISO Naming Tree.

> Note: Off-the-shelf interoperability and interchangeability can only be obtained through well-documented features broadly supported by the industry as a whole. Designing a system that uses features not defined in a standard or not typically deployed in combination with one another inhibits the goals of interoperability and interchangeability, especially if the documentation of these features is not available for distribution to system integrators. Standards allow the use of additional features to support innovation, which is constantly needed within the industry, but users should be aware of the risks involved with using such features.

To claim "Conformance" to NTCIP 1202 v03, an ASC device shall be provided with a MIB that contains all non-NTCIP-standardized (including custom, proprietary, and vendor-, agency-, or implementation-specific) object and block definitions. Object and block definitions contained in the MIB shall:

a) use the ASN.1 notation and conventions used in NTCIP 1202 v03 standardized object and block definitions;
b) include non-NTCIP-standardized enumerations; and
c) include meaningful, human-understandable, English language DESCRIPTION fields including descriptions of the object and all supported values.

In addition, to claim "Conformance" to NTCIP 1202 v03, an ASC device shall use the NTCIP 1202 v03 standardized objects to manage NTCIP 1202 v03 functionality. Non-NTCIP-standardized objects may be used to manage NTCIP 1202 v03 functionality only if NTCIP 1202 v03 standardized objects for the same functions are also supported. ASC devices or systems attempting to manage, configure, or monitor an NTCIP 1202 v03 standardized object shall not be required to use proprietary objects for NTCIP 1202 v03 functionality.

### 3.3.3 Protocol Requirements List (PRL) Table

In addition to the Conformance column and the Support column, which were discussed in Sections 3.3.1 and 3.3.2, the additional columns in the PRL table are the User Need ID and User Need columns, FR ID and Functional Requirements columns, and the Additional Specifications column.

a) **User Need ID:** The number assigned to the user need statement. The user needs are defined within Section 2, and the PRL is based upon the user need sections within that section.
b) **User Need:** A short descriptive title identifying the user need.

 © 2023 AASHTO / ITE / NEMA

c) **FR ID:** The number assigned to the functional requirement statement. The requirements are defined within Section 3, and the PRL references the traces from user needs to these requirements.
d) **Functional Requirement:** A short descriptive title identifying the functional requirement.
e) **Additional Specifications:** Identifies other requirements to satisfy, including user selectable range values. The "Additional Specifications" column may (and should) be used by a procurement specification to provide additional notes and requirements for the product to be procured or may be used by an implementer to provide any additional details about the implementation. In some cases, default text already exists in this field, which the user should complete to fully specify the equipment. However, additional text can be added to this field as needed to fully specify a feature.

Note: Visit www.ntcip.org for information on the availability of electronic copies of the PRL.

© 2023 AASHTO / ITE / NEMA Do Not Copy Without Written Permission

**Table 5 Protocol Requirements List (PRL)**

| Protocol Requirements List (PRL) | | | | | | |
|---|---|---|---|---|---|---|
| **User Need ID** | **User Need** | **FR ID** | **Functional Requirement** | **Conformance** | **Support** | **Additional Specifications** |
| 2.3 | Reference Physical Architecture [Informative] | | | | | |
| 2.3.1 | ASC Characteristics—Cabinet Specifications | | | M | Yes | |
| 2.3.1.a (332) | Model 332 Cabinet | | | O.1 (1) | Yes / No | |
| 2.3.1.b (TS1) | NEMA TS 1 Cabinet | | | O.1 (1) | Yes / No | |
| 2.3.1.c (TS2-2) | NEMA TS 2 Type 2 Cabinet | | | O.1 (1) | Yes / No | |
| 2.3.1.d (TS2-1) | NEMA TS 2 Type 1 Cabinet | | | O.1 (1) | Yes / No | |
| 2.3.1.e (ITS) | ITS Cabinet | | | O.1 (1) | Yes / No | |
| 2.3.2 | ASC Characteristics—Controller Types | | | M | Yes | |
| 2.3.2.a | Phase-based controller | | | M | Yes | |
| 2.3.2.b | Interval-based controller | | | NA | NA | Interval-based controllers are not supported by NTCIP 1202 v03 |
| 2.4 | Architectural Needs | | | | | |
| 2.4.1 | Provide Live Data | | | M | Yes | |
| | | 3.4.1.1 | Retrieve Data | M | Yes | |
| | | 3.4.1.2 | Deliver Data | M | Yes | |
| | | 3.4.1.3 | Explore Data | M | Yes | |
| | | 3.4.1.4.1 | Monitor SNMP Information | M | Yes | |
| | | 3.4.1.4.2 | Monitor Successful SNMP GET Requests | O | Yes / No | |
| | | 3.4.1.4.3 | Monitor Valid SNMP SET Requests | O | Yes / No | |
| | | 3.4.1.4.4 | Monitor SNMP Traps | O | Yes / No | |
| | | 3.4.1.4.5 | Enable Authentication Traps | O | Yes / No | |
| | | 3.6.1 | Response Time for Requests | M | Yes | The Response Time for all requests shall be ___ milliseconds (5-500: Default=25). |
| 2.4.2 | Provide Dynamic Object Data | | | O | Yes / No | |


© 2023 AASHTO / ITE / NEMA

| Protocol Requirements List (PRL) | | | | | | |
|---|---|---|---|---|---|---|
| **User Need ID** | **User Need** | **FR ID** | **Functional Requirement** | **Conformance** | **Support** | **Additional Specifications** |
| | | H.1.1.9.1.1 | Configure Dynamic Object Persistence Time | M | Yes / NA | |
| | | H.1.1.9.1.2 | Configure Dynamic Object Configuration ID | M | Yes / NA | |
| | | H.1.2.5.1.1 | Determine Dynamic Object Persistence Time | M | Yes / NA | |
| | | H.1.2.5.1.2 | Determine Dynamic Object Configuration ID | M | Yes / NA | |
| | | H.1.2.5.2.1.1 | Monitor Incoming and Outgoing STMP Packet Exchanges | M | Yes / NA | |
| | | H.1.2.5.2.1.2 | Monitor Incoming and Outgoing STMP Packet Types | M | Yes / NA | |
| | | H.1.2.5.2.2.1 | Monitor Incoming and Outgoing STMP Error Exchanges—Too Big Error | M | Yes / NA | |
| | | H.1.2.5.2.2.2 | Monitor Incoming and Outgoing STMP Error Exchanges—No Such Name | M | Yes / NA | |
| | | H.1.2.5.2.2.3 | Monitor Incoming and Outgoing STMP Error Exchanges—Bad Value | M | Yes / NA | |
| | | H.1.2.5.2.2.4 | Monitor Incoming and Outgoing STMP Error Exchanges—Read-Only | M | Yes / NA | |
| | | H.1.2.5.2.2.5 | Monitor Incoming and Outgoing STMP Error Exchanges—General Error | M | Yes / NA | |
| 2.4.3 | Provide Block Data | | | O | Yes / No | |
| | | 3.5.2.1.14.1.1.1 | Configure Block Object Get Control—Phase Data | O | Yes / No | |
| | | 3.5.2.1.14.1.1.2 | Configure Block Object Get Control—Vehicle Detector Data | O | Yes / No | |
| | | 3.5.2.1.14.1.1.3 | Configure Block Object Get Control—Pedestrian Detector Data | O | Yes / No | |
| | | 3.5.2.1.14.1.1.4 | Configure Block Object Get Control—Pattern Data | O | Yes / No | |
| | | 3.5.2.1.14.1.1.5 | Configure Block Object Get Control—Split Data | O | Yes / No | |

© 2023 AASHTO / ITE / NEMA Copy Per PRL Distribution Permission

| Protocol Requirements List (PRL) | | | | | | |
|---|---|---|---|---|---|---|
| **User Need ID** | **User Need** | **FR ID** | **Functional Requirement** | **Conformance** | **Support** | **Additional Specifications** |
| | | 3.5.2.1.14.1.1.6 | Configure Block Object Get Control—Time Base Data | O | Yes / No | |
| | | 3.5.2.1.14.1.1.7 | Configure Block Object Get Control—Preempt Data | O | Yes / No | |
| | | 3.5.2.1.14.1.1.8 | Configure Block Object Get Control—Sequence Data | O | Yes / No | |
| | | 3.5.2.1.14.1.1.9 | Configure Block Object Get Control—Channel Data | O | Yes / No | |
| | | 3.5.2.1.14.1.1.10 | Configure Block Object Get Control—Overlap Data | O | Yes / No | |
| | | 3.5.2.1.14.1.1.11 | Configure Block Object Get Control—Port 1 Data | O | Yes / No | |
| | | 3.5.2.1.14.1.1.12 | Configure Block Object Get Control—Schedule Data | O | Yes / No | |
| | | 3.5.2.1.14.1.1.13 | Configure Block Object Get Control—Day Plan Data | O | Yes / No | |
| | | 3.5.2.1.14.1.1.14 | Configure Block Object Get Control—Event Configuration Data | O | Yes / No | |
| | | 3.5.2.1.14.1.1.15 | Configure Block Object Get Control—Event Class Data | O | Yes / No | |
| | | 3.5.2.1.14.1.1.16 | Configure Block Object Get Control—Dynamic Object Configuration Data | O | Yes / No | |
| | | 3.5.2.1.14.1.1.17 | Configure Block Object Get Control—Dynamic Object Owner Data | O | Yes / No | |
| | | 3.5.2.1.14.1.1.18 | Configure Block Object Get Control—Dynamic Object Status Data | O | Yes / No | |
| | | 3.5.2.1.14.1.1.19 | Configure Block Object Get Control—Miscellaneous ASC Data | O | Yes / No | |
| | | 3.5.2.1.14.1.1.20 | Configure Block Object Get Control—Version 3 Additional Phase Data | O | Yes / No | |
| | | 3.5.2.1.14.1.1.21 | Configure Block Object Get Control—Version 3 Additional Vehicle Detector Data | O | Yes / No | |
| | | 3.5.2.1.14.1.1.22 | Configure Block Object Get Control—Version 3 Vehicle Detector Volume Occupancy Report Data | O | Yes / No | |


© 2023 AASHTO / ITE / NEMA

| Protocol Requirements List (PRL) | | | | | | |
|---|---|---|---|---|---|---|
| **User Need ID** | **User Need** | **FR ID** | **Functional Requirement** | **Conformance** | **Support** | **Additional Specifications** |
| | | 3.5.2.1.14.1.1.23 | Configure Block Object Get Control—Version 3 Additional Pedestrian Detector Data [Deprecated] | O | Yes / No | |
| | | 3.5.2.1.14.1.1.24 | Configure Block Object Get Control—Version 3 Pedestrian Detector Report Data | O | Yes / No | |
| | | 3.5.2.1.14.1.1.25 | Configure Block Object Get Control—Version 3 Pedestrian Push Button Configuration Data | O | Yes / No | |
| | | 3.5.2.1.14.1.1.26 | Configure Block Object Get Control—Version 3 Additional Pattern Data [Deprecated] | O | Yes / No | |
| | | 3.5.2.1.14.1.1.27 | Configure Block Object Get Control—Version 3 Additional Split Data | O | Yes / No | |
| | | 3.5.2.1.14.1.1.28 | Configure Block Object Get Control—Version 3 Additional Preempt Data | O | Yes / No | |
| | | 3.5.2.1.14.1.1.29 | Configure Block Object Get Control—Version 3 Preempt Queue Delay Data | O | Yes / No | |
| | | 3.5.2.1.14.1.1.31 | Configure Block Object Get Control—Version 3 Additional Overlap Data | O | Yes / No | |
| | | 3.5.2.1.14.1.1.32 | Configure Block Object Get Control—Communications Port Definition Data | O | Yes / No | |
| | | 3.5.2.1.14.1.1.33 | Configure Block Object Get Control—Ethernet Communications Port Definition Data | O | Yes / No | |
| | | 3.5.2.1.14.1.1.34 | Configure Block Object Get Control—SIU Communications Port 1 Definition Data | O | Yes / No | |
| | | 3.5.2.1.14.1.1.35 | Configure Block Object Get Control—Version 3 Additional Miscellaneous ASC Data | O | Yes / No | |
| | | 3.5.2.1.14.1.1.36 | Configure Block Object Get Control—User-Defined Backup Timer Content Data | O | Yes / No | |
| | | 3.5.2.1.14.1.1.37 | Configure Block Object Get Control—ASC Location Data | O | Yes / No | |

© 2023 AASHTO / ITE / NEMA

| Protocol Requirements List (PRL) | | | | | | |
|---|---|---|---|---|---|---|
| **User Need ID** | **User Need** | **FR ID** | **Functional Requirement** | **Conformance** | **Support** | **Additional Specifications** |
| | | 3.5.2.1.14.1.1.38 | Configure Block Object Get Control—Global Set ID Data | O | Yes / No | |
| | | 3.5.2.1.14.1.1.39 | Configure Block Object Get Control—ASC Environmental Monitoring Data | O | Yes / No | |
| | | 3.5.2.1.14.1.1.40 | Configure Block Object Get Control—ASC Cabinet Temperature Sensor Data | O | Yes / No | |
| | | 3.5.2.1.14.1.1.41 | Configure Block Object Get Control—ASC Cabinet Humidity Sensor Data | O | Yes / No | |
| | | 3.5.2.1.14.1.1.42 | Configure Block Object Get Control—I/O Input Mapping Data | O | Yes / No | |
| | | 3.5.2.1.14.1.1.44 | Configure Block Object Get Control—I/O Output Mapping Data | O | Yes / No | |
| | | 3.5.2.1.14.1.1.46 | Configure Block Object Get Control—I/O Mapping Description Data | O | Yes / No | |
| | | 3.5.2.1.14.1.1.48 | Configure Block Object Get Control—Connected Vehicle RSU Port Configuration Data | O | Yes / No | |
| | | 3.5.2.1.14.1.1.49 | Configure Block Object Get Control—SPaT Lanes Concurrency Data | O | Yes / No | |
| | | 3.5.2.1.14.1.1.50 | Configure Block Object Get Control—Connected Vehicle SPaT RSU Port Configuration Data | O | Yes / No | |
| | | 3.5.2.1.14.1.1.53 | Configure Block Object Get Control—Connected Vehicle Detection Report Data | O | Yes / No | |
| | | 3.5.2.1.14.1.1.54 | Configure Block Object Get Control—Additional Pattern Data | O | Yes / No | |
| | | 3.5.2.1.14.1.1.55 | Configure Block Object Get Control—Connected Vehicle Configuration 2 Data | O | Yes / No | |
| | | 3.5.2.1.14.1.2 | Configure Block Data | M | Yes | |
| | | 3.5.2.1.14.2.1 | Monitor Block Object Get Control | M | Yes | |
| | | 3.5.2.1.14.2.2 | Monitor Block Data | M | Yes | |
| | | 3.5.2.1.14.2.3.1 | Monitor Block Error Status—Set/Get Command Attempt | M | Yes | |


© 2023 AASHTO / ITE / NEMA

| Protocol Requirements List (PRL) | | | | | | |
|---|---|---|---|---|---|---|
| **User Need ID** | **User Need** | **FR ID** | **Functional Requirement** | **Conformance** | **Support** | **Additional Specifications** |
| | | 3.5.2.1.14.2.3.2 | Monitor Block Error Status—Configuration Validity Check Error | M | Yes | |
| | | 3.5.2.1.14.2.3.3 | Monitor Block Error Status—Value Set Validity Check Error | M | Yes | |
| | | 3.5.2.1.14.2.3.4 | Monitor Block Error Status—Error-Causing Data Element | M | Yes | |
| 2.4.4 | Provide for Log Data Local Storage and Retrieval | | | O | Yes / No | |
| | | 3.5.1.6.1 | Configure ASC Clock Source | O | Yes / No | |
| | | 3.5.1.6.2 | Determine ASC Clock Status | O | Yes / No | |
| | | 3.5.1.6.3 | Determine Current ASC Clock Source | O | Yes / No | |
| | | 3.5.1.6.4 | Determine Available ASC Clock Sources | O | Yes / No | |
| | | H.1.1.5.1 | Configure Time | M | Yes / NA | |
| | | H.1.1.5.2 | Configure Time Zone | TimeZone:O | Yes / No / NA | Note: Users are cautioned that this object definition has been revised to address interoperability issues in version 01, but remains at the same ObjectID. Pay close attention to the implementation, and interoperability of this object.<br><br>Place a checkmark below, if the ASC is NOT required to support the major version that is checked.<br>Version v01____<br>Version v02____ |
| | | H.1.1.5.3 | Configure Daylight Saving Mode | DST:O | Yes / No / NA | |
| | | H.1.1.5.4 | Determine Time Setting | M | Yes / NA | |
| | | H.1.1.5.5 (TimeZone) | Determine Time Zone Setting | O | Yes / No / NA | |
| | | H.1.1.5.6 (DST) | Determine Daylight Saving Mode Setting | O | Yes / No / NA | |
| | | H.1.1.5.7 | Monitor Current Time | M | Yes / NA | |
| | | H.1.3.1.1 | Retrieve Current Configuration of Logging Service | M | Yes / NA | |
| | | H.1.3.1.2 | Configure Event Logging Service | M | Yes / NA | |
| | | H.1.3.1.3 | Retrieve Event Logged Data | M | Yes / NA | |
| | | H.1.3.1.4 | Configure Clearing of Event Class Log | M | Yes / NA | |

© 2023 AASHTO / ITE / NEMA Copy Per PRL Distribution Permission

| Protocol Requirements List (PRL) | | | | | | |
|---|---|---|---|---|---|---|
| **User Need ID** | **User Need** | **FR ID** | **Functional Requirement** | **Conformance** | **Support** | **Additional Specifications** |
| | | H.1.3.1.5 | Determine Capabilities of Event Logging Service | M | Yes / NA | |
| | | H.1.3.1.6 | Determine Number of Logged Events per Event Class | M | Yes / NA | |
| | | H.1.3.1.7 | Support a Number of Events to Store in Log | M | Yes / NA | The ASC shall be capable of storing at least ____ events in the event log file (up to 65535). |
| | | H.1.3.1.8 | Configure Clearing of Global Log | O | Yes / No / NA | |
| | | H.1.3.1.9 | Determine Total Number of Logged Events | O | Yes / No / NA | |
| | | H.1.3.1.10 | Determine Number of Events Within a Class | M | Yes / NA | |
| | | H.1.3.1.11 | Determine Event Logging Resolution | M | Yes / NA | |
| | | H.1.3.1.12 | Clear Event Configuration | M | Yes / NA | |
| | | H.1.3.1.13 | Clear Event Classes | M | Yes / NA | |
| | | H.1.3.1.14 | Clear Event Class Log | M | Yes / NA | |
| | | H.1.3.1.15 | Retrieve Non-Sequential Clock Changes | O | Yes / No / NA | |
| | | H.1.3.2.1 | Record and Timestamp Events | M | Yes / NA | |
| | | H.1.3.2.2 | Support a Number of Event Classes | M | Yes / NA | The ASC shall support at least ____ event classes. |
| | | H.1.3.2.3 | Support a Number of Events to Log | M | Yes / NA | The ASC shall be able to log at least ____ events. |
| | | H.1.3.2.4.1 | Support On-Change Events | M | Yes / NA | |
| | | H.1.3.2.4.2 | Support Greater Than Events | M | Yes / NA | |
| | | H.1.3.2.4.3 | Support Less Than Events | M | Yes / NA | |
| | | H.1.3.2.4.4 | Support Hysteresis Events | M | Yes / NA | |
| | | H.1.3.2.4.5 | Support Periodic Events | M | Yes / NA | |
| | | H.1.3.2.4.6 | Support Bit Flag Events | M | Yes / NA | |
| | | H.1.3.2.4.7 | Support Event Monitoring on Any Data | M | Yes / NA | |
| | | 3.6.1 | Response Time for Requests | M | Yes / NA | The Response Time for all requests shall be ___ milliseconds (5-500: Default=25). |

Copy Per PRL Distribution Permission
© 2023 AASHTO / ITE / NEMA

| Protocol Requirements List (PRL) | | | | | | |
|---|---|---|---|---|---|---|
| **User Need ID** | **User Need** | **FR ID** | **Functional Requirement** | **Conformance** | **Support** | **Additional Specifications** |
| 2.4.5 | Provide for Database Management | | | M | Yes | |
| | | H.1.2.2.1 | Monitor Database Operation | M | Yes | |
| | | H.1.2.2.2 | Monitor Database Operation Status | M | Yes | |
| | | H.1.2.2.3 | Monitor Database Operation Error Status | M | Yes | |
| | | H.1.4.2.1 | Control Database Access | M | Yes | |
| | | H.1.4.2.2 | Perform Database Consistency Check | M | Yes | |
| | | H.1.4.2.3 | Enforce Consistency Check Parameters | M | Yes | |
| 2.4.6 (Traps) | Condition-Based Exception Reporting | | | O | Yes / No | |
| | | 3.6.2 | Condition-Based Maximum Transmission Start Time | M | Yes | The Maximum Transmission Start Time for all reports shall be ___ milliseconds (Default=10000). |
| | | H.1.1.10.1 | Enable/Disable Exception Reporting | M | Yes | |
| | | H.1.1.10.2.1 | Configure a Monitored (Watch) Object | M | Yes | |
| | | H.1.1.10.2.2 (Watch) | Configure a Monitored Group of Objects (Watch Block) | M | Yes | |
| | | H.1.1.10.3.1 | Configure a Report Object | M | Yes | |
| | | H.1.1.10.3.2 (Report) | Configure a Report Group of Objects (Block) | M | Yes | |
| | | H.1.1.10.4 | Configure Exception Reporting Destination | M | Yes | |
| | | H.1.1.10.5 | Configure Exception Reporting Community | M | Yes | |
| | | H.1.1.10.6.1 (TrapAck) | Configure Exception Reporting Acknowledgement | O.2 (1..*) | Yes / No | |
| | | H.1.1.10.6.2 | Configure Exception Reporting Aggregation | O.2 (1..*) | Yes / No | |
| | | H.1.1.10.6.3 (TrapQueue) | Configure Exception Reporting Queue | O.2 (1..*) | Yes / No | |
| | | H.1.1.10.6.4 | Configure Exception Reporting (Forced) | O.2 (1..*) | Yes / No | |

© 2023 AASHTO / ITE / NEMA Copy Per PRL Distribution Permission

| Protocol Requirements List (PRL) | | | | | | |
|---|---|---|---|---|---|---|
| **User Need ID** | **User Need** | **FR ID** | **Functional Requirement** | **Conformance** | **Support** | **Additional Specifications** |
| | | H.1.1.10.6.5 | Configure Exception Reporting Communications | M | Yes | |
| | | H.1.1.10.6.6 (AntiStream) | Configure Exception Reporting—Maximum Rate | O | Yes / No | |
| | | H.1.1.10.7 | Determine Watch Block Capabilities | Watch:M | Yes / NA | |
| | | H.1.1.10.8 | Determine Report Block Capabilities | Report:M | Yes / NA | |
| | | H.1.1.10.9 | Determine Exception Reporting Trap Channel Capabilities | M | Yes | |
| | | H.1.1.10.10 | Determine Exception Reporting Aggregation Capabilities | M | Yes | |
| | | H.1.1.10.11 | Determine Event Reporting Latency | M | Yes | |
| | | H.1.1.10.12 | Monitor Communications Link State | M | Yes | |
| | | H.1.1.10.13.1 | Monitor Exception Based Communications Link Error | M | Yes | |
| | | H.1.1.10.13.2 | Monitor Exception Based Maximum Rate Exceeded | AntiStream:M | Yes / NA | |
| | | H.1.1.10.13.3 | Monitor Exception Based Queue Full Error | TrapQueue:M | Yes / NA | |
| | | H.1.1.10.14 | Monitor Exception Based Transmissions | M | Yes | |
| | | H.1.1.10.15 | Monitor Number of Lost Queued Exception Based Reports | TrapQueue:M | Yes / NA | |
| | | H.1.1.10.16 | Monitor Number of Exception Based Events | M | Yes | |
| | | H.1.1.10.17 | Monitor Exception Based Data | M | Yes | |
| | | H.1.1.10.18 | Clear Event Class | O | Yes / No | |
| | | H.1.1.10.19 | Clear Event Configuration | O | Yes / No | |
| | | H.1.1.10.20 | Clear Event Log Table | O | Yes / No | |
| | | H.1.1.10.21 | Clear Report Objects | O | Yes / No | |
| | | H.1.1.10.22 | Clear Report Blocks | O | Yes / No | |
| | | H.1.1.10.23 | Clear Watch Objects | O | Yes / No | |
| | | H.1.1.10.24 | Clear Watch Blocks | O | Yes / No | |
| | | H.1.1.10.25 | Clear Exception Based Reporting Tables | O | Yes / No | |
| | | H.1.1.10.26 | Reset a Communications Link | TrapAck:O | Yes / No / NA | |

Copy Per PRL Distribution Permission
© 2023 AASHTO / ITE / NEMA

| Protocol Requirements List (PRL) | | | | | | |
|---|---|---|---|---|---|---|
| **User Need ID** | **User Need** | **FR ID** | **Functional Requirement** | **Conformance** | **Support** | **Additional Specifications** |
| | | H.1.5.1 | Atomic Operations | M | Yes | |
| 2.5 | Features | | | | | |
| 2.5.1 | Manage the ASC Configuration | | | M | Yes | |
| 2.5.1.1 | Retrieve Device Identity | | | M | Yes | |
| | | 3.5.1.1.1 | Configure ASC Location | O | Yes / No | Only needed if no external GNSS device is attached to the ASC. |
| | | 3.5.1.1.2 | Configure ASC Location—Antenna Offset | O | Yes / No | Only needed if an external GNSS device is attached to the ASC. |
| | | H.1.1.1 | Determine Device Component Information | M | Yes | |
| | | H.1.1.2.1 | Determine Unique Deployment Configuration Identifier | M | Yes | |
| | | H.1.1.2.2 | Determine Configuration Identifier Parameter Content | O | Yes / No | |
| | | H.1.1.3 | Determine Supported Standards | M | Yes | Note: Was optional in NTCIP 1202 v02. |
| | | H.1.1.4 | Manage Unique System Name | M | Yes | |
| | | H.1.1.11 | Configure System Contact Information | M | Yes | |
| | | H.1.1.12 | Monitor Other System Information | M | Yes | |
| 2.5.1.2 | Manage Communications | | | O | Yes / No | |
| | | 3.5.1.2.1.1 | Enable/Disable Communications Port | M | Yes | The ASC shall not be allowed to enable/disable the following ports numbers: _____ _____ |
| | | 3.5.1.2.1.2 | Configure ASC Ethernet Ports | O | Yes / No | The ASC shall not be allowed to configure the following ports: _____ |
| | | 3.5.1.2.1.3 | Configure ASC Asynchronous Serial Ports | O | Yes / No | The ASC shall not be allowed to configure the following ports: _____ |

© 2023 AASHTO / ITE / NEMA

| Protocol Requirements List (PRL) | | | | | | |
|---|---|---|---|---|---|---|
| **User Need ID** | **User Need** | **FR ID** | **Functional Requirement** | **Conformance** | **Support** | **Additional Specifications** |
| | | 3.5.1.2.1.4 | Configure ASC Synchronous Serial Ports | O | Yes / No | The ASC shall not be allowed to configure the following ports: _____ |
| | | 3.5.1.2.1.5 | Configure ASC Communications Protocol—Serial Ports | O | Yes / No | The ASC shall not be allowed to configure the following ports: _____ |
| | | 3.5.1.2.2.1 | Determine Number of ASC Communications Ports | M | Yes | |
| | | 3.5.1.2.3.1 | Monitor Response Timeout—Ethernet | O | Yes / No | |
| | | 3.5.1.2.3.2 | Monitor Response Timeout—Serial | O | Yes / No | |
| | | 3.5.1.2.3.3 | Monitor Data Link Errors—Ethernet | O | Yes / No | |
| | | 3.5.1.2.3.4 | Monitor Data Link Errors—Serial | O | Yes / No | |
| | | 3.5.1.2.3.5 | Monitor Polling Timeout—Port 1 | TS1:O, TS2-2:O, TS2-1:O | Yes / No / NA | |
| | | 3.5.1.2.3.6 | Monitor Polling Timeout—Serial Bus | ITS:O | Yes / No / NA | |
| | | 3.5.1.2.4.1 | Set Communications Port to Loopback Mode | O | Yes / No | |
| | | 3.5.1.2.4.2 | Set Communications Port to Echo Mode | O | Yes / No | |
| 2.5.1.3 | Manage Cabinet Environment | | | O | Yes / No | |
| | | 3.5.1.3.1 | Monitor Cabinet Door Status | M | Yes | |
| | | 3.5.1.3.2 | Monitor Cabinet Fan Status | O | Yes / No | |
| | | 3.5.1.3.3 | Monitor Cabinet Heater Status | O | Yes / No | |
| | | 3.5.1.3.4 | Monitor Cabinet Float Switch Status | O | Yes / No | |
| | | 3.5.1.3.5 (Temp) | Monitor ASC Temperature | O | Yes / No | |
| | | 3.5.1.3.6 (Humidity) | Monitor ASC Humidity | O | Yes / No | |
| | | 3.5.1.3.7 | Configure ASC Temperature Threshold | Temp:O | Yes / No / NA | |
| | | 3.5.1.3.8 | Configure ASC Humidity Thresholds | Humidity:O | Yes / No / NA | |
| | | 3.5.1.3.9 | Configure ATC Cabinet Device LEDs | O | Yes / No | |
| 2.5.1.4 (Power) | Monitor Power | | | O | Yes / No | |
| | | 3.5.1.4.1 | Determine Power Source | M | Yes | |


© 2023 AASHTO / ITE / NEMA

| Protocol Requirements List (PRL) | | | | | | |
|---|---|---|---|---|---|---|
| **User Need ID** | **User Need** | **FR ID** | **Functional Requirement** | **Conformance** | **Support** | **Additional Specifications** |
| | | 3.5.1.4.2 | Monitor AC Power Status | O | Yes / No | |
| | | 3.5.1.4.3 (UPS) | Monitor UPS Battery Charge | O | Yes / No | |
| | | 3.5.1.4.4 | Monitor UPS Battery Voltage | UPS:O | Yes / No / NA | |
| | | 3.5.1.4.5 | Monitor UPS Battery Current | UPS:O | Yes / No / NA | |
| 2.5.1.5 (Perform) | Retrieve Operational Performance Data | | | O | Yes / No | |
| | | 3.5.1.5.1.1 | Enable/Disable Collection of Operational Performance Data | M | Yes | |
| | | 3.5.1.5.1.2 | Start Collection of Operational Performance Data on Specific Date/Time | O | Yes / No | |
| | | 3.5.1.5.1.3 | End Collection of Operational Performance Data on Specific Date/Time | O | Yes / No | |
| | | 3.5.1.5.1.4 | Configure Collection of Operational Performance Data | O | Yes / No | |
| | | 3.5.1.5.2.1 | Determine Collection of Operational Performance Data | M | Yes | The ASC shall allow the recording of at least ____ days' worth of data for each event code at a recording interval of 1/10 seconds (maximum 7 days). |
| | | 3.5.1.5.2.2 | Determine Operational Performance Data Collection Capabilities | M | Yes | |
| | | 3.5.1.5.3.1 | Monitor Operational Performance Data | O | Yes / No | |
| | | 3.5.1.5.3.2 | Retrieve Operational Performance Data | O | Yes / No | |
| | | 3.5.1.5.3.3 | Retrieve Operational Performance Data—Time Range | O | Yes / No | |
| | | 3.5.1.5.3.4 | Retrieve Operational Performance Data—Event Code | O | Yes / No | |
| | | 3.5.1.5.4.1 | Clear Operational Performance Data—All | O | Yes / No | |

© 2023 AASHTO / ITE / NEMA
Copy Per PRL Distribution Permission

| Protocol Requirements List (PRL) | | | | | | |
|---|---|---|---|---|---|---|
| **User Need ID** | **User Need** | **FR ID** | **Functional Requirement** | **Conformance** | **Support** | **Additional Specifications** |
| | | 3.5.1.5.4.2 | Clear Operational Performance Data—Time Range | O | Yes / No | |
| | | 3.5.1.5.4.3 | Clear Operational Performance Data—Event Code | O | Yes / No | |
| | | 3.5.1.5.4.4 | Clear Operational Performance Data—Event Class | O | Yes / No | |
| | | 3.5.1.5.4.5 | Clear Operational Performance Data—Configuration | O | Yes / No | |
| 2.5.1.6 | Manage Auxiliary External Inputs/Outputs | | | O | Yes / No | |
| | | H.1.1.6.1 | Determine External Port Information | M | Yes | |
| | | H.1.1.6.2 | Configure Port Information | M | Yes | |
| | | H.1.1.6.3 | Required Number of Auxiliary Ports | O | Yes / No | The ASC shall support at least ____ analog Auxiliary Ports.<br>The ASC shall support at least ____ digital Auxiliary Ports. |
| | | H.1.2.1 | Monitor Status of External Device | O | Yes / No | |
| | | H.1.4.1 | Control External Device | O | Yes / No | |
| 2.5.1.7 | Manage Database | | | M | Yes | |
| | | 3.5.2.1.1.6 | Configure Parameters for Creation of an Alternate Device Configuration Identifier | O | Yes / No | |
| | | H.1.1.2.1 | Determine Unique Deployment Configuration Identifier | M | Yes | |
| | | H.1.1.2.2 | Determine Configuration Identifier Parameter Content | O | Yes / No | |
| 2.5.2 | Manage Signal Operations | | | M | Yes | |
| 2.5.2.1 | Manage Signal Configuration | | | M | Yes | |
| 2.5.2.1.1 | Manage Controller Startup Functions | | | M | Yes | |
| | | 3.5.2.1.1.1.1 | Configure Startup All-Red Flash Mode | O | Yes / No | |
| | | 3.5.2.1.1.1.2 | Configure Startup Flash Time | M | Yes | |
| | | 3.5.2.1.1.1.3 | Enable/Disable Automatic Pedestrian Clearance Setting | M | Yes | |
| | | 3.5.2.1.1.2 | Configure Backup Time | M | Yes | |


© 2023 AASHTO / ITE / NEMA

| Protocol Requirements List (PRL) | | | | | | |
|---|---|---|---|---|---|---|
| **User Need ID** | **User Need** | **FR ID** | **Functional Requirement** | **Conformance** | **Support** | **Additional Specifications** |
| | | 3.5.2.1.1.3 (BackupUD) | Configure Backup Time—User-Defined | O | Yes / No | |
| | | 3.5.2.1.1.4 | Configure Backup Time—User-Defined Functions | BackupUD:M | Yes / NA | The user shall provide a list of all objects to be contained in the Backup timer monitoring. Alternatively, user could require vendor to provide a list. |
| | | 3.5.2.1.1.5 | Determine Maximum Number of Functions Supported for Backup Time | BackupUD:M | Yes / NA | |
| 2.5.2.1.2 | Manage Phase Configurations | | | M | Yes | |
| | | 3.5.2.1.2.1.1 | Enable/Disable Phase | M | Yes | |
| | | 3.5.2.1.2.1.2 | Configure Vehicle Phase Minimum Green Time | M | Yes | |
| | | 3.5.2.1.2.1.3 | Configure Vehicle Phase Passage Time | M | Yes | |
| | | 3.5.2.1.2.1.4 | Configure Vehicle Phase Maximum Green Times | M | Yes | |
| | | 3.5.2.1.2.1.5 | Configure Vehicle Phase Third Maximum Green Times | O | Yes / No | |
| | | 3.5.2.1.2.1.6 | Configure Phase Yellow Time | M | Yes | |
| | | 3.5.2.1.2.1.7 | Configure Red Clearance Time | M | Yes | |
| | | 3.5.2.1.2.1.8 | Configure Phase Red Revert Time | O | Yes / No | |
| | | 3.5.2.1.2.1.9 | Configure Unit Red Revert Time | Unit:M | Yes / NA | |
| | | 3.5.2.1.2.1.10 | Configure Added Initial Time | M | Yes | |
| | | 3.5.2.1.2.1.11 | Configure Maximum Initial Time | M | Yes | |
| | | 3.5.2.1.2.1.12 | Configure Time Before Reduction | M | Yes | |
| | | 3.5.2.1.2.1.13 | Configure Phase Time to Reduce | M | Yes | |
| | | 3.5.2.1.2.1.14 | Configure Cars Before Reduction | O | Yes / No | |
| | | 3.5.2.1.2.1.15 | Configure Phase Reduce By Time | O | Yes / No | |
| | | 3.5.2.1.2.1.16 | Configure Phase Minimum Gap Time | M | Yes | |
| | | 3.5.2.1.2.1.17 | Configure Phase Dynamic Maximum Limit | O | Yes / No | |
| | | 3.5.2.1.2.1.18 | Configure Phase Dynamic Maximum Step | O | Yes / No | |

© 2023 AASHTO / ITE / NEMA Copy Per PRL Distribution Permission

| Protocol Requirements List (PRL) | | | | | | |
|---|---|---|---|---|---|---|
| **User Need ID** | **User Need** | **FR ID** | **Functional Requirement** | **Conformance** | **Support** | **Additional Specifications** |
| | | 3.5.2.1.2.1.19.1 | Configure Phase Startup—Initialize in a Red State | O.3 (1..*) | Yes / No | |
| | | 3.5.2.1.2.1.19.2 | Configure Phase Startup—Initialize at Beginning of Min Green and Walk | O.3 (1..*) | Yes / No | |
| | | 3.5.2.1.2.1.19.3 | Configure Phase Startup—Initialize at Beginning of Min Green | O.3 (1..*) | Yes / No | |
| | | 3.5.2.1.2.1.19.4 | Configure Phase Startup—Initialize at Beginning of Yellow | O.3 (1..*) | Yes / No | |
| | | 3.5.2.1.2.1.19.5 | Configure Phase Startup—Initialize at Beginning of Red Clearance | O.3 (1..*) | Yes / No | |
| | | 3.5.2.1.2.1.20 | Configure Automatic Flash Entry Phase | O | Yes / No | |
| | | 3.5.2.1.2.1.21 | Configure Automatic Flash Exit Phase | O | Yes / No | |
| | | 3.5.2.1.2.1.22 | Configure Call to Non-Actuated 1 | O | Yes / No | |
| | | 3.5.2.1.2.1.23 | Configure Call to Non-Actuated 2 | O | Yes / No | |
| | | 3.5.2.1.2.1.24 | Configure Non-Lock Detector Memory | O | Yes / No | |
| | | 3.5.2.1.2.1.25 | Configure Minimum Vehicle Recall | O | Yes / No | |
| | | 3.5.2.1.2.1.26 | Configure Maximum Vehicle Recall | O | Yes / No | |
| | | 3.5.2.1.2.1.27 | Configure Soft Vehicle Recall | O | Yes / No | |
| | | 3.5.2.1.2.1.28 | Configure Dual Phase Entry | O | Yes / No | |
| | | 3.5.2.1.2.1.29 | Configure Simultaneous Gap Disable | O | Yes / No | |
| | | 3.5.2.1.2.1.30 | Configure Guaranteed Passage | O | Yes / No | |
| | | 3.5.2.1.2.1.31 | Configure Actuated Rest-in-Walk | O | Yes / No | |
| | | 3.5.2.1.2.1.32 | Configure Conditional Service Enable | O | Yes / No | |
| | | 3.5.2.1.2.1.33 | Configure Added Initial Calculation | O | Yes / No | |
| | | 3.5.2.1.2.1.34 | Configure Phase-to-Ring Association | M | Yes | |
| | | 3.5.2.1.2.1.35 | Configure Phase Concurrency | M | Yes | |
| | | 3.5.2.1.2.1.36 | Configure Yellow Change Time Before End of Ped Clearance | O | Yes / No | |
| | | 3.5.2.1.2.1.37 | Enable/Disable Ped-Only Phase | O | Yes / No | |
| | | 3.5.2.1.2.1.38 | Configure Pedestrian Green Time | M | Yes | |
| | | 3.5.2.1.2.1.39 | Configure Pedestrian Clearance Time | M | Yes | |
| | | 3.5.2.1.2.1.40 | Configure Ped Phase Walk Recycle Time | M | Yes | |

Copy Per PRL Distribution Permission
© 2023 AASHTO / ITE / NEMA

| Protocol Requirements List (PRL) | | | | | | |
|---|---|---|---|---|---|---|
| **User Need ID** | **User Need** | **FR ID** | **Functional Requirement** | **Conformance** | **Support** | **Additional Specifications** |
| | | 3.5.2.1.2.1.41 | Configure Ped Phase Don't Walk Revert Time | M | Yes | |
| | | 3.5.2.1.2.1.42 | Configure Non-Lock Ped Detector Memory | M | Yes | |
| | | 3.5.2.1.2.1.43 | Configure Pedestrian Recall | M | Yes | |
| | | 3.5.2.1.2.1.44 | Configure Alternate Pedestrian Clearance Time | O | Yes / No | |
| | | 3.5.2.1.2.1.45 | Configure Alternate Pedestrian Walk Time | O | Yes / No | |
| | | 3.5.2.1.2.1.46 | Configure Vehicle Phase Walk Offset Time | O | Yes / No | |
| | | 3.5.2.1.2.1.47 (AdvGrWarn) | Configure Advanced Green Warning—Associated Vehicle Phase | O | Yes / No | |
| | | 3.5.2.1.2.1.48 | Configure Advanced Green Warning—Start Delay Time | AdvGrWarn:M | Yes / NA | |
| | | 3.5.2.1.2.1.49 (AdvRdWarn) | Configure Advanced Red Warning—Associated Vehicle Phase | O | Yes / No | |
| | | 3.5.2.1.2.1.50 | Configure Red Indication Advanced Warning—Start Delay Time | AdvRdWarn:M | Yes / NA | |
| | | 3.5.2.1.2.1.51 | Configure Flashing Yellow Arrow Associated Vehicle Phase | O | Yes / No | |
| | | 3.5.2.1.2.1.52 | Configure Flashing Red Arrow Associated Vehicle Phase | O | Yes / No | |
| | | 3.5.2.1.2.1.53 (Bicycle) | Configure Bicycle Phase Minimum Green Time | O | Yes / No | |
| | | 3.5.2.1.2.1.54 | Configure Bicycle Phase Yellow Time | Bicycle:M | Yes / NA | |
| | | 3.5.2.1.2.1.55 | Configure Bicycle Phase Red Clearance Time | Bicycle:M | Yes / NA | |
| | | 3.5.2.1.2.1.56 | Configure Bicycle Phase Red Revert Time | Bicycle:O | Yes / No / NA | |
| | | 3.5.2.1.2.1.57 | Enable/Disable Bicycle Phase | Bicycle:O | Yes / No / NA | |
| | | 3.5.2.1.2.1.58 | Configure Non-Lock Bicycle Detector Memory | Bicycle:O | Yes / No / NA | |
| | | 3.5.2.1.2.1.59 | Configure Bicycle Phase Recall | Bicycle:O | Yes / No / NA | |
| | | 3.5.2.1.2.1.60 | Configure Soft Bicycle Phase Recall | Bicycle:O | Yes / No / NA | |

© 2023 AASHTO / ITE / NEMA
Copy Per PRL Distribution Permission

| Protocol Requirements List (PRL) | | | | | | |
|---|---|---|---|---|---|---|
| **User Need ID** | **User Need** | **FR ID** | **Functional Requirement** | **Conformance** | **Support** | **Additional Specifications** |
| | | 3.5.2.1.2.1.61 | Configure Bicycle Phase-to-Ring Association | Bicycle:M | Yes / NA | |
| | | 3.5.2.1.2.1.62 | Configure Bicycle Phase Concurrency | Bicycle:M | Yes / NA | |
| | | 3.5.2.1.2.1.63 (Transit) | Configure Transit Phase Minimum Green Time | O | Yes / No | |
| | | 3.5.2.1.2.1.64 | Configure Transit Phase Maximum Green Time | Transit:M | Yes / NA | |
| | | 3.5.2.1.2.1.65 | Configure Transit Phase Third Maximum Green Time | Transit:O | Yes / No / NA | |
| | | 3.5.2.1.2.1.66 | Configure Transit Phase Yellow Time | Transit:M | Yes / NA | |
| | | 3.5.2.1.2.1.67 | Configure Transit Phase Red Clearance Time | Transit:M | Yes / NA | |
| | | 3.5.2.1.2.1.68 | Configure Transit Phase Red Revert Time | Transit:O | Yes / No / NA | |
| | | 3.5.2.1.2.1.69 | Configure Transit Phase Added Initial Time | Transit:M | Yes / NA | |
| | | 3.5.2.1.2.1.70 | Configure Transit Phase Maximum Initial Time | Transit:M | Yes / NA | |
| | | 3.5.2.1.2.1.71 | Enable/Disable Transit Phase | Transit:M | Yes / NA | |
| | | 3.5.2.1.2.1.72 | Configure Non-Lock Transit Detector Memory | Transit:O | Yes / No / NA | |
| | | 3.5.2.1.2.1.73 | Configure Transit Phase Recall | Transit:O | Yes / No / NA | |
| | | 3.5.2.1.2.1.74 | Configure Soft Transit Phase Recall | Transit:O | Yes / No / NA | |
| | | 3.5.2.1.2.1.75 | Configure Dual Transit Phase Entry | Transit:O | Yes / No / NA | |
| | | 3.5.2.1.2.1.76 | Configure Transit Phase-to-Ring Association | Transit:M | Yes / NA | |
| | | 3.5.2.1.2.1.77 | Configure Transit Phase Concurrency | Transit:M | Yes / NA | |
| | | 3.5.2.1.2.1.78 | Enable/Disable Vehicle Phase Omit | PhsCtrl:M | Yes / NA | |
| | | 3.5.2.1.2.1.79 | Enable/Disable Vehicle Phase Omit During Transition | O | Yes / No | |
| | | 3.5.2.1.2.1.80 | Enable/Disable Ped-Only Phase Omit | PhsCtrl:M | Yes / NA | |
| | | 3.5.2.1.2.1.81 | Enable/Disable Ped-Only Phase Omit During Transition | O | Yes / No | |
| | | 3.5.2.1.2.1.82 | Enable/Disable Bicycle-Only Phase Omit | Bicycle, PhsCtrl:M | Yes / NA | |

Copy Per PRL Distribution Permission
© 2023 AASHTO / ITE / NEMA

| Protocol Requirements List (PRL) | | | | | | |
|---|---|---|---|---|---|---|
| **User Need ID** | **User Need** | **FR ID** | **Functional Requirement** | **Conformance** | **Support** | **Additional Specifications** |
| | | 3.5.2.1.2.1.83 | Enable/Disable Bicycle-Only Phase Omit During Transition | Bicycle:O | Yes / No / NA | |
| | | 3.5.2.1.2.1.84 | Enable/Disable Transit Phase Omit | Transit, PhsCtrl:M | Yes / NA | |
| | | 3.5.2.1.2.1.85 | Enable/Disable Transit Phase Omit During Transition | Transit:O | Yes / No / NA | |
| | | 3.5.2.1.2.1.86 | Configure Alternate Minimum Vehicle Green Time During Transition | O | Yes / No | |
| | | 3.5.2.1.2.1.87 | Configure Alternate Minimum Pedestrian Walk Time During Transition | O | Yes / No | |
| | | 3.5.2.1.2.1.88 | Configure Alternate Minimum Bicycle Green Time During Transition | Bicycle:O | Yes / No / NA | |
| | | 3.5.2.1.2.1.89 | Configure Alternate Minimum Transit Green Time During Transition | Transit:O | Yes / No / NA | |
| | | 3.5.2.1.2.1.90.1 | Configure Phase-Level Force Mode for Coordination—Floating | Coord:O.4 (1..*) | Yes / No / NA | |
| | | 3.5.2.1.2.1.90.2 | Configure Phase-Level Force Mode for Coordination—Fixed | Coord:O.4 (1..*) | Yes / No / NA | |
| | | 3.5.2.1.2.2.1 | Determine Maximum Number of Phases | M | Yes | The ASC shall support at least ____ phases. |
| 2.5.2.1.3 (Coord) | Manage Coordination Configurations | | | O | Yes / No | |
| | | 3.5.2.1.3.1.1 | Configure Operational Mode for Coordination—Automatic | O.5 (1..*) | Yes / No | |
| | | 3.5.2.1.3.1.2 | Configure Operational Mode for Coordination—Manual Pattern | O.5 (1..*) | Yes / No | |
| | | 3.5.2.1.3.1.3 | Configure Operational Mode for Coordination—Manual Free | O.5 (1..*) | Yes / No | |
| | | 3.5.2.1.3.1.4 | Configure Operational Mode for Coordination—Manual Flash | O.5 (1..*) | Yes / No | |
| | | 3.5.2.1.3.2.1 | Configure Correction Mode for Coordination—Dwell | O.6 (1..*) | Yes / No | |
| | | 3.5.2.1.3.2.2 | Configure Correction Mode for Coordination—Shortway | O.6 (1..*) | Yes / No | |

© 2023 AASHTO / ITE / NEMA Copy Per PRL Distribution Permission

| Protocol Requirements List (PRL) | | | | | | |
|---|---|---|---|---|---|---|
| **User Need ID** | **User Need** | **FR ID** | **Functional Requirement** | **Conformance** | **Support** | **Additional Specifications** |
| | | 3.5.2.1.3.2.3 | Configure Correction Mode for Coordination—AddOnly | O.6 (1..*) | Yes / No | |
| | | 3.5.2.1.3.2.4 | Configure Correction Mode for Coordination—SubtractOnly | O.6 (1..*) | Yes / No | |
| | | 3.5.2.1.3.3.1 | Configure Correction Mode for Coordination—Maximum 1 | O.7 (1..*) | Yes / No | |
| | | 3.5.2.1.3.3.2 | Configure Correction Mode for Coordination—Maximum 2 | O.7 (1..*) | Yes / No | |
| | | 3.5.2.1.3.3.3 | Configure Correction Mode for Coordination—Maximum Inhibit | O.7 (1..*) | Yes / No | |
| | | 3.5.2.1.3.3.4 | Configure Correction Mode for Coordination—Maximum 3 | O.7 (1..*) | Yes / No | |
| | | 3.5.2.1.3.4.1 | Configure Unit-Level Force Mode for Coordination—Floating | O.8 (1..*) | Yes / No | |
| | | 3.5.2.1.3.4.2 | Configure Unit-Level Force Mode for Coordination—Fixed | O.8 (1..*) | Yes / No | |
| | | 3.5.2.1.3.5.1 | Configure Unit Coordination Point—First Phase Green Begin | O.9 (1..*) | Yes / No | |
| | | 3.5.2.1.3.5.2 | Configure Unit Coordination Point—Last Phase Green Begin | O.9 (1..*) | Yes / No | |
| | | 3.5.2.1.3.5.3 | Configure Unit Coordination Point—First Phase Green End | O.9 (1..*) | Yes / No | |
| | | 3.5.2.1.3.5.4 | Configure Unit Coordination Point—Last Phase Green End | O.9 (1..*) | Yes / No | |
| | | 3.5.2.1.3.5.5 | Configure Unit Coordination Point—First Phase Yellow End | O.9 (1..*) | Yes / No | |
| | | 3.5.2.1.3.5.6 | Configure Unit Coordination Point—Last Phase Yellow End | O.9 (1..*) | Yes / No | |
| | | 3.5.2.1.3.6.1 | Configure Coordination Point—First Phase Green Begin | O.10 (1..*) | Yes / No | |
| | | 3.5.2.1.3.6.2 | Configure Coordination Point—Last Phase Green Begin | O.10 (1..*) | Yes / No | |
| | | 3.5.2.1.3.6.3 | Configure Coordination Point—First Phase Green End | O.10 (1..*) | Yes / No | |
| | | 3.5.2.1.3.6.4 | Configure Coordination Point—Last Phase Green End | O.10 (1..*) | Yes / No | |


© 2023 AASHTO / ITE / NEMA

| Protocol Requirements List (PRL) | | | | | | |
|---|---|---|---|---|---|---|
| **User Need ID** | **User Need** | **FR ID** | **Functional Requirement** | **Conformance** | **Support** | **Additional Specifications** |
| | | 3.5.2.1.3.6.5 | Configure Coordination Point—First Phase Yellow End | O.10 (1..*) | Yes / No | |
| | | 3.5.2.1.3.6.6 | Configure Coordination Point—Last Phase Yellow End | O.10 (1..*) | Yes / No | |
| | | 3.5.2.1.3.6.7 | Configure Coordination Point—Unit Coordination Point | O.10 (1..*) | Yes / No | |
| | | 3.5.2.1.3.7 | Configure Omit Phases During Transitions | O | Yes / No | |
| | | 3.5.2.1.3.8 | Configure Minimum Green Times During Transitions | O | Yes / No | |
| | | 3.5.2.1.3.9 | Configure Minimum Pedestrian Times During Transitions | O | Yes / No | |
| | | 3.5.2.1.3.10.1 | Configure Transit Correction Mode for Coordination—Maximum 1 | O.11 (1..*) | Yes / No | |
| | | 3.5.2.1.3.10.2 | Configure Transit Correction Mode for Coordination—Maximum 2 | O.11 (1..*) | Yes / No | |
| | | 3.5.2.1.3.10.3 | Configure Transit Correction Mode for Coordination—MaxInhibit | O.11 (1..*) | Yes / No | |
| | | 3.5.2.1.3.10.4 | Configure Transit Correction Mode for Coordination—Maximum 3 | O.1 (1..*) | Yes / No | |
| 2.5.2.1.4 | Manage Timing Patterns | | | Coord:M | Yes / NA | |
| | | 3.5.2.1.4.1.1 | Configure Pattern Cycle Time | M | Yes | |
| | | 3.5.2.1.4.1.2 | Configure Pattern Offset Time | M | Yes | |
| | | 3.5.2.1.4.1.3 | Configure Pattern Split Association | M | Yes | |
| | | 3.5.2.1.4.1.4 | Configure Pattern Sequence Association | M | Yes | |
| | | 3.5.2.1.4.1.5 | Configure Pattern Maximum Mode | O | Yes / No | |
| | | 3.5.2.1.4.2.1 | Determine Maximum Number of Phase-Based Timing Pattern | M | Yes | The ASC shall support at least ____ timing patterns. |

© 2023 AASHTO / ITE / NEMA

| Protocol Requirements List (PRL) | | | | | | |
|---|---|---|---|---|---|---|
| **User Need ID** | **User Need** | **FR ID** | **Functional Requirement** | **Conformance** | **Support** | **Additional Specifications** |
| | | 3.5.2.1.4.2.2 | Determine Phase-Based Timing Pattern Type | M | Yes | The ASC shall support one of the following types of signal patterns (Select one only):<br>____ Each pattern is unique.<br>____ Each pattern consists of a plan with 3 different offsets.<br>____ Each pattern consists of a plan with 5 different offsets. |
| 2.5.2.1.5 | Manage Splits Configurations | | | O | Yes / No | |
| | | 3.5.2.1.5.1.1 | Configure Phase Split Time | M | Yes | |
| | | 3.5.2.1.5.1.2.1 | Configure Phase Split Mode—None | O.12 (1..*) | Yes / No | |
| | | 3.5.2.1.5.1.2.2 | Configure Phase Split Mode—Minimum Vehicle Recall | O.12 (1..*) | Yes / No | |
| | | 3.5.2.1.5.1.2.3 | Configure Phase Split Mode—Maximum Vehicle Recall | O.12 (1..*) | Yes / No | |
| | | 3.5.2.1.5.1.2.4 | Configure Phase Split Mode—Pedestrian Recall | O.12 (1..*) | Yes / No | |
| | | 3.5.2.1.5.1.2.5 | Configure Phase Split Mode—Maximum Vehicle and Pedestrian Recall | O.12 (1..*) | Yes / No | |
| | | 3.5.2.1.5.1.2.6 | Configure Phase Split Mode—Phase Omit | O.12 (1..*) | Yes / No | |
| | | 3.5.2.1.5.1.2.7 | Configure Phase Split Mode—Bicycle Recall | O.12 (1..*) | Yes / No | |
| | | 3.5.2.1.5.1.2.8 | Configure Phase Split Mode—Transit Recall | O.12 (1..*) | Yes / No | |
| | | 3.5.2.1.5.1.2.9 | Configure Phase Split Mode—Non-Actuated | O.12 (1..*) | Yes / No | |
| | | 3.5.2.1.5.1.3 | Configure Split Coordination Phase | M | Yes | |
| | | 3.5.2.1.5.1.4 | Configure Pre-Timed Split | O | Yes / No | |
| | | 3.5.2.1.5.2.1 | Determine Maximum Number of Phase Splits | M | Yes | The ASC shall support at least ____ splits. |
| 2.5.2.1.6 (Ring) | Manage Ring Configurations | | | O | Yes / No | |
| | | 3.5.2.1.6.1.1 | Configure Sequence Data | M | Yes | |


© 2023 AASHTO / ITE / NEMA

| Protocol Requirements List (PRL) | | | | | | |
|---|---|---|---|---|---|---|
| **User Need ID** | **User Need** | **FR ID** | **Functional Requirement** | **Conformance** | **Support** | **Additional Specifications** |
| | | 3.5.2.1.6.2.1 | Determine Maximum Number of Rings | M | Yes | The ASC shall support at least ____ rings. |
| | | 3.5.2.1.6.2.2 | Determine Maximum Number of Sequences | M | Yes | The ASC shall support at least ____ sequences. |
| 2.5.2.1.7 (Channel) | Manage Channel Configurations | | | O | Yes / No | |
| | | 3.5.2.1.7.1.1 | Configure Channel Control Source | M | Yes | |
| | | 3.5.2.1.7.1.2.1 | Configure Channel Control Type—Vehicle Phase | O.13 (1..*) | Yes / No | |
| | | 3.5.2.1.7.1.2.2 | Configure Channel Control Type—Vehicle Overlap Phase | O.13 (1..*) | Yes / No | |
| | | 3.5.2.1.7.1.2.3 | Configure Channel Control Type—Pedestrian Phase | O.13 (1..*) | Yes / No | |
| | | 3.5.2.1.7.1.2.4 | Configure Channel Control Type—Pedestrian Overlap Phase | O.13 (1..*) | Yes / No | |
| | | 3.5.2.1.7.1.2.5 | Configure Channel Control Type—Bicycle Phase | O.13 (1..*) | Yes / No | |
| | | 3.5.2.1.7.1.2.6 | Configure Channel Control Type—Bicycle Overlap Phase | O.13 (1..*) | Yes / No | |
| | | 3.5.2.1.7.1.2.7 | Configure Channel Control Type—Transit Phase | O.13 (1..*) | Yes / No | |
| | | 3.5.2.1.7.1.2.8 | Configure Channel Control Type—Transit Overlap Phase | O.13 (1..*) | Yes / No | |
| | | 3.5.2.1.7.1.2.9 | Configure Channel Control Type—Queue Jump Phase | O.13 (1..*) | Yes / No | |
| | | 3.5.2.1.7.1.3.1 | Enable/Disable Channel Flash—Yellow | O.14 (1..*) | Yes / No | |
| | | 3.5.2.1.7.1.3.2 | Enable/Disable Channel Flash—Red | O.14 (1..*) | Yes / No | |
| | | 3.5.2.1.7.1.3.3 | Enable/Disable Channel Flash—Alternate Half Hertz | O.14 (1..*) | Yes / No | |
| | | 3.5.2.1.7.1.4.1 | Enable/Disable Channel Dim—Green | Dimming:O | Yes / No / NA | |
| | | 3.5.2.1.7.1.4.2 | Enable/Disable Channel Dim—Yellow | Dimming:O | Yes / No / NA | |
| | | 3.5.2.1.7.1.4.3 | Enable/Disable Channel Dim—Red | Dimming:O | Yes / No / NA | |
| | | 3.5.2.1.7.1.4.4 | Enable/Disable Channel Dim—Alternate Half Hertz | Dimming:O | Yes / No / NA | |

© 2023 AASHTO / ITE / NEMA

| Protocol Requirements List (PRL) | | | | | | |
|---|---|---|---|---|---|---|
| **User Need ID** | **User Need** | **FR ID** | **Functional Requirement** | **Conformance** | **Support** | **Additional Specifications** |
| | | 3.5.2.1.7.2.1 | Determine Maximum Number of Channels | M | Yes | The ASC shall support at least ____ channels (see appropriate hardware specification such as NEMA TS 2 to determine maximum number of supported channels). |
| 2.5.2.1.8 (Overlap) | Manage Overlap Configurations | | | O | Yes / No | |
| | | 3.5.2.1.8.1.1.1 | Configure Overlap Type—Vehicle Normal | O.15 (1..*) | Yes / No | |
| | | 3.5.2.1.8.1.1.2 | Configure Overlap Type—Vehicle Minus Green and Yellow | O.15 (1..*) | Yes / No | |
| | | 3.5.2.1.8.1.1.3 | Configure Overlap Type—Pedestrian Normal | O.15 (1..*) | Yes / No | |
| | | 3.5.2.1.8.1.1.4 | Configure Overlap Type—Bicycle Normal | O.15 (1..*) | Yes / No | |
| | | 3.5.2.1.8.1.1.5 | Configure Overlap Type—Transit Normal | O.15 (1..*) | Yes / No | |
| | | 3.5.2.1.8.1.1.6 | Configure Overlap Type—Flashing Yellow Arrow—3 Section Head | O.15 (1..*) | Yes / No | |
| | | 3.5.2.1.8.1.1.7 | Configure Overlap Type—Flashing Yellow Arrow—4 Section Head | O.15 (1..*) | Yes / No | |
| | | 3.5.2.1.8.1.1.8 | Configure Overlap Type—Flashing Yellow Arrow for Pedestrians | O.15 (1..*) | Yes / No | |
| | | 3.5.2.1.8.1.1.9 | Configure Overlap Type—Flashing Red Arrow—3 Section Head | O.15 (1..*) | Yes / No | |
| | | 3.5.2.1.8.1.1.10 | Configure Overlap Type—Flashing Red Arrow—4 Section Head | O.15 (1..*) | Yes / No | |
| | | 3.5.2.1.8.1.1.11 | Configure Overlap Type—Transit Specific Signal Head | O.15 (1..*) | Yes / No | |
| | | 3.5.2.1.8.1.1.12 | Configure Overlap Type—2 Section Transit Specific Signal Head | O.15 (1..*) | Yes / No | |
| | | 3.5.2.1.8.1.1.13 | Configure Overlap Type—Minus Green Yellow Alternate | O.15 (1..*) | Yes / No | |
| | | 3.5.2.1.8.1.2 | Configure Overlap Included Phases | M | Yes | |


© 2023 AASHTO / ITE / NEMA

| Protocol Requirements List (PRL) | | | | | | |
|---|---|---|---|---|---|---|
| **User Need ID** | **User Need** | **FR ID** | **Functional Requirement** | **Conformance** | **Support** | **Additional Specifications** |
| | | 3.5.2.1.8.1.3 | Configure Overlap Modifier Phases | O | Yes / No | |
| | | 3.5.2.1.8.1.4 | Configure Pedestrian Modifier Phases | O | Yes / No | |
| | | 3.5.2.1.8.1.5 | Configure Overlap Trailing Green | M | Yes | |
| | | 3.5.2.1.8.1.6 | Configure Overlap Trailing Yellow | M | Yes | |
| | | 3.5.2.1.8.1.7 | Configure Overlap Trailing Red Clearance | M | Yes | |
| | | 3.5.2.1.8.1.8 | Configure Overlap Walk | O | Yes / No | |
| | | 3.5.2.1.8.1.9 | Configure Overlap Pedestrian Clearance | O | Yes / No | |
| | | 3.5.2.1.8.2.1 | Determine Maximum Number of Overlaps | M | Yes | The ASC shall support at least ____ overlaps. |
| 2.5.2.1.9 (Preempt) | Manage Preempt Configurations | | | O | Yes / No | |
| | | 3.5.2.1.9.1.1 | Enable/Disable Preempt Inputs | O | Yes / No | |
| | | 3.5.2.1.9.1.2.1 | Configure Preempt Control—Non-Locking Memory | O.16 (1..*) | Yes / No | |
| | | 3.5.2.1.9.1.2.2 | Configure Preempt Control—Preempt Override Flash | O.16 (1..*) | Yes / No | |
| | | 3.5.2.1.9.1.2.3 | Configure Preempt Control—Preempt Override Priority | O.16 (1..*) | Yes / No | |
| | | 3.5.2.1.9.1.2.4 | Configure Preempt Control—Flash Dwell | O.16 (1..*) | Yes / No | |
| | | 3.5.2.1.9.1.3 | Configure Preempt Link | M | Yes | |
| | | 3.5.2.1.9.1.4 | Configure Preempt Delay | M | Yes | |
| | | 3.5.2.1.9.1.5 | Configure Preempt Minimum Duration | M | Yes | |
| | | 3.5.2.1.9.1.6 | Configure Preempt Enter Minimum Green Time | O | Yes / No | |
| | | 3.5.2.1.9.1.7 | Configure Preempt Enter Minimum Walk Time | O | Yes / No | |
| | | 3.5.2.1.9.1.8 | Configure Preempt Enter Pedestrian Clearance Time | O | Yes / No | |
| | | 3.5.2.1.9.1.9 | Configure Preempt Track Clearance Time | M | Yes | |
| | | 3.5.2.1.9.1.10 | Configure Preempt Minimum Dwell Time | M | Yes | |

© 2023 AASHTO / ITE / NEMA

| Protocol Requirements List (PRL) | | | | | | |
|---|---|---|---|---|---|---|
| **User Need ID** | **User Need** | **FR ID** | **Functional Requirement** | **Conformance** | **Support** | **Additional Specifications** |
| | | 3.5.2.1.9.1.11 | Configure Preempt Maximum Presence Time | M | Yes | |
| | | 3.5.2.1.9.1.12 | Configure Preempt Track Clearance Phases | M | Yes | |
| | | 3.5.2.1.9.1.13 | Configure Preempt Dwell Phases | M | Yes | |
| | | 3.5.2.1.9.1.14 | Configure Preempt Dwell Pedestrian Movements | O | Yes / No | |
| | | 3.5.2.1.9.1.15 (preemptExit) | Configure Preempt Exit Phases | O | Yes / No | |
| | | 3.5.2.1.9.1.16.1 | Configure Preempt Exit Phase Strategy—Exit to Normal Operation | preemptExit:O.17 (1..*) | Yes / No / NA | |
| | | 3.5.2.1.9.1.16.2 | Configure Preempt Exit Phase Strategy—Exit to Coordination | preemptExit:O.17 (1..*) | Yes / No / NA | |
| | | 3.5.2.1.9.1.16.3 (preemptQueue) | Configure Preempt Exit Phase Strategy—Exit to Queue Delay Recovery | preemptExit:O.17 (1..*) | Yes / No / NA | |
| | | 3.5.2.1.9.1.16.4 | Configure Preempt Exit Phase Strategy—Exit to Short Service Phase | preemptExit:O.17 (1..*) | Yes / No / NA | |
| | | 3.5.2.1.9.1.17 | Configure Preempt Track Overlap | O | Yes / No | |
| | | 3.5.2.1.9.1.18 | Configure Preempt Dwell Overlap | O | Yes / No | |
| | | 3.5.2.1.9.1.19 | Configure Preempt Cycling Phases | M | Yes | |
| | | 3.5.2.1.9.1.20 | Configure Preempt Cycling Pedestrian Movements | O | Yes / No | |
| | | 3.5.2.1.9.1.21 | Configure Preempt Cycling Overlaps | O | Yes / No | |
| | | 3.5.2.1.9.1.22 | Configure Preempt Enter Yellow Change Time | O | Yes / No | |
| | | 3.5.2.1.9.1.23 | Configure Preempt Enter Red Clearance Time | O | Yes / No | |
| | | 3.5.2.1.9.1.24 | Configure Preempt Track Yellow Change Time | O | Yes / No | |
| | | 3.5.2.1.9.1.25 | Configure Preempt Track Red Clearance Time | O | Yes / No | |
| | | 3.5.2.1.9.1.26 | Configure Preempt Exit Priority Levels | preemptQueue:O | Yes / No / NA | |

Copy Per PRL Distribution Permission
© 2023 AASHTO / ITE / NEMA

| Protocol Requirements List (PRL) | | | | | | |
|---|---|---|---|---|---|---|
| **User Need ID** | **User Need** | **FR ID** | **Functional Requirement** | **Conformance** | **Support** | **Additional Specifications** |
| | | 3.5.2.1.9.1.27.1 | Configure Preempt Max Presence Exceeded—Normal | M | Yes | |
| | | 3.5.2.1.9.1.27.2 | Configure Preempt Max Presence Exceeded—All Flash Red | O | Yes / No | |
| | | 3.5.2.1.9.1.28 | Configure Preempt Cycling Phases Sequence | M | Yes | |
| | | 3.5.2.1.9.1.29 | Configure Preempt Enter Minimum Bicycle Time | O | Yes / No | |
| | | 3.5.2.1.9.1.30 | Configure Preempt Enter Bicycle Clearance Time | O | Yes / No | |
| | | 3.5.2.1.9.1.31 | Configure Preempt Cycling Bicycle Phases | O | Yes / No | |
| | | 3.5.2.1.9.1.32 | Configure Preempt Enter Minimum Transit Time | O | Yes / No | |
| | | 3.5.2.1.9.1.33 | Configure Preempt Enter Transit Clearance Time | O | Yes / No | |
| | | 3.5.2.1.9.1.34 | Configure Preempt Cycling Transit Phases | O | Yes / No | |
| | | 3.5.2.1.9.1.35 | Configure Preempt Gate Description | O | Yes / No | |
| | | 3.5.2.1.9.2.1 | Determine Maximum Number of Preempts | M | Yes | The ASC shall support at least ____ preempts. |
| 2.5.2.1.10 (Scheduler) | Manage Timing Pattern Scheduler | | | O | Yes / No | |
| | | 3.5.2.1.10.1.1 | Configure Timebase Pattern Synchronization Time | M | Yes | |
| | | H.1.1.5.1 | Configure Time | M | Yes | |

© 2023 AASHTO / ITE / NEMA
Copy Per PRL Distribution Permission

| Protocol Requirements List (PRL) | | | | | | |
|---|---|---|---|---|---|---|
| **User Need ID** | **User Need** | **FR ID** | **Functional Requirement** | **Conformance** | **Support** | **Additional Specifications** |
| | | H.1.1.5.2 | Configure Time Zone | TimeZone:O | Yes / No / NA | Note: Users are cautioned that this object definition has been revised to address interoperability issues in version 01, but remains at the same ObjectID. Pay close attention to the implementation, and interoperability of this object.<br><br>Place a checkmark below, if the ASC is NOT required to support the major version that is checked.<br>Version v01____<br>Version v02____ |
| | | H.1.1.5.3 | Configure Daylight Saving Mode | DST:O | Yes / No / NA | |
| | | H.1.1.5.4 | Determine Time Setting | M | Yes | |
| | | H.1.1.5.5 (TimeZone) | Determine Time Zone Setting | O | Yes / No | |
| | | H.1.1.5.6 (DST) | Determine Daylight Saving Mode Setting | O | Yes / No | |
| | | H.1.1.7.1 | Configure Timebased Scheduler Month-Day-Date | M | Yes | The ASC shall support at least ____ Schedule Entries (between 1 and 65535).<br>Note: This requirement also appears under User Need ID 2.5.2.1.12 in the PRL. |


© 2023 AASHTO / ITE / NEMA

| Protocol Requirements List (PRL) | | | | | | |
|---|---|---|---|---|---|---|
| **User Need ID** | **User Need** | **FR ID** | **Functional Requirement** | **Conformance** | **Support** | **Additional Specifications** |
| | | H.1.1.7.2 | Configure Timebased Scheduler Day Plans and Timebased Actions | M | Yes | The ASC shall support at least ____ Day Plans (between 1 and 255).<br>The ASC shall support at least ____ Events per Day Plans (between 1 and 255).<br>Note: This requirement also appears under User Need ID 2.5.2.1.12 in the PRL. |
| | | H.1.2.3.1 | Monitor Timebased Scheduler Month-Day-Date | M | Yes | |
| | | H.1.2.3.2 | Monitor Timebased Scheduler Day Plans and Timebased Actions | M | Yes | |
| | | H.1.2.3.3 | Monitor Active Timebased Schedule | M | Yes | |
| | | H.1.2.3.4 | Monitor Active Timebased Schedule Day Plan and Timebased Actions | M | Yes | |
| 2.5.2.1.11 | Manage Action Scheduler | | | Scheduler:M | Yes / NA | |
| | | 3.5.2.1.10.1.1 | Configure Timebase Pattern Synchronization Time | M | Yes | |
| | | 3.5.2.1.10.1.2 | Configure Timebased Action—Pattern | M | Yes | |
| | | 3.5.2.1.10.1.3.1 | Configure Timebased Action—Auxiliary Function 1 | O.18 (1..*) | Yes / No | |
| | | 3.5.2.1.10.1.3.2 | Configure Timebased Action—Auxiliary Function 2 | O.18 (1..*) | Yes / No | |
| | | 3.5.2.1.10.1.3.3 | Configure Timebased Action—Auxiliary Function 3 | O.18 (1..*) | Yes / No | |
| | | 3.5.2.1.10.1.3.4 | Configure Timebased Action—Dimming | Dimming: O.18 (1..*) | Yes / No / NA | |
| | | 3.5.2.1.10.1.4.1 | Configure Timebased Action—Special Function 1 | O.19 (1..*) | Yes / No | |
| | | 3.5.2.1.10.1.4.2 | Configure Timebased Action—Special Function 2 | O.19 (1..*) | Yes / No | |
| | | 3.5.2.1.10.1.4.3 | Configure Timebased Action—Special Function 3 | O.19 (1..*) | Yes / No | |
| | | 3.5.2.1.10.1.4.4 | Configure Timebased Action—Special Function 4 | O.19 (1..*) | Yes / No | |

© 2023 AASHTO / ITE / NEMA Copy Per PRL Distribution Permission

| Protocol Requirements List (PRL) | | | | | | |
|---|---|---|---|---|---|---|
| **User Need ID** | **User Need** | **FR ID** | **Functional Requirement** | **Conformance** | **Support** | **Additional Specifications** |
| | | 3.5.2.1.10.1.4.5 | Configure Timebased Action—Special Function 5 | O.19 (1..*) | Yes / No | |
| | | 3.5.2.1.10.1.4.6 | Configure Timebased Action—Special Function 6 | O.19 (1..*) | Yes / No | |
| | | 3.5.2.1.10.1.4.7 | Configure Timebased Action—Special Function 7 | O.19 (1..*) | Yes / No | |
| | | 3.5.2.1.10.1.4.8 | Configure Timebased Action—Special Function 8 | O.19 (1..*) | Yes / No | |
| | | 3.5.2.1.10.2.1 | Determine Maximum Number of Timebased Actions | M | Yes | The ASC shall support at least ____ Timebased Actions (between 1 and 65535). |
| | | 3.5.2.1.10.2.2 | Determine Action in Effect | M | Yes | |
| | | H.1.1.7.1 | Configure Timebased Scheduler Month-Day-Date | M | Yes | The ASC shall support at least ____ Schedule Entries (between 1 and 65535).<br>Note: This requirement also appears under User Need ID 2.5.2.1.11 in the PRL. |
| | | H.1.1.7.2 | Configure Timebased Scheduler Day Plans and Timebased Actions | M | Yes | The ASC shall support at least ____ Day Plans (between 1 and 255).<br>The ASC shall support at least ____ Events per Day Plans (between 1 and 255).<br>Note: This requirement also appears under User Need ID 2.5.2.1.11 in the PRL. |
| | | H.1.2.3.1 | Monitor Timebased Scheduler Month-Day-Date | M | Yes | |
| | | H.1.2.3.2 | Monitor Timebased Scheduler Day Plans and Timebased Actions | M | Yes | |
| | | H.1.2.3.3 | Monitor Active Timebased Schedule | M | Yes | |
| | | H.1.2.3.4 | Monitor Active Timebased Schedule Day Plan and Timebased Actions | M | Yes | |
| 2.5.2.1.12 | Manage I/O Mapping | | | O | Yes / No | |
| | | 3.5.2.1.11.1.1 | Set Active I/O Map | M | Yes | |

Copy Per PRL Distribution Permission
© 2023 AASHTO / ITE / NEMA

| Protocol Requirements List (PRL) | | | | | | |
|---|---|---|---|---|---|---|
| **User Need ID** | **User Need** | **FR ID** | **Functional Requirement** | **Conformance** | **Support** | **Additional Specifications** |
| | | 3.5.2.1.11.1.2.1 | Configure I/O Map Description | M | Yes | |
| | | 3.5.2.1.11.1.2.2.1 | Configure I/O Map Input Device | M | Yes | |
| | | 3.5.2.1.11.1.2.2.2 | Configure I/O Map Input Device Pin | M | Yes | |
| | | 3.5.2.1.11.1.2.2.3 | Configure I/O Map Input Function | M | Yes | |
| | | 3.5.2.1.11.1.2.3.1 | Configure I/O Map Output Device | M | Yes | |
| | | 3.5.2.1.11.1.2.3.2 | Configure I/O Map Output Device Pin | M | Yes | |
| | | 3.5.2.1.11.1.2.3.3 | Configure I/O Map Output Function | M | Yes | |
| | | 3.5.2.1.11.2.1 | Retrieve Maximum Number of I/O Maps | M | Yes | |
| | | 3.5.2.1.11.2.2 | Retrieve Maximum Number of I/O Map Inputs | M | Yes | |
| | | 3.5.2.1.11.2.3 | Retrieve Maximum Number of I/O Map Outputs | M | Yes | |
| | | 3.5.2.1.11.2.4 | Retrieve I/O Mapping Activate Conditions | M | Yes | The following conditions shall be satisfied before a new I/O map can be activated:<br>___ Cabinet Door Open<br>___ in any flash state<br>___ programmed all red flash<br>___ in CVM flash<br>___ ASC restart |
| | | 3.5.2.1.11.2.5 | Retrieve I/O Mapping Input Functions | M | Yes | |
| | | 3.5.2.1.11.2.6 | Retrieve I/O Mapping Output Functions | M | Yes | |
| | | 3.5.2.1.11.2.7 | Retrieve I/O Map Input Device Pin Status | M | Yes | |
| | | 3.5.2.1.11.2.8 | Retrieve I/O Map Output Device Pin Status | M | Yes | |
| | | 3.5.2.1.11.2.9.1 | Enumerate I/O Map—FIO Inputs | 332:M | Yes / NA | |
| | | 3.5.2.1.11.2.9.2 | Enumerate I/O Map—FIO Outputs | 332:M | Yes / NA | |
| | | 3.5.2.1.11.2.9.3 | Enumerate I/O Map—TS1 Inputs | TS1, TS2-2:M | Yes / NA | |
| | | 3.5.2.1.11.2.9.4 | Enumerate I/O Map—TS1 Outputs | TS1, TS2-2:M | Yes / NA | |
| | | 3.5.2.1.11.2.9.5 | Enumerate I/O Map—TS2 BIU Inputs | TS2-1:M | Yes / NA | |
| | | 3.5.2.1.11.2.9.6 | Enumerate I/O Map—TS2 BIU Outputs | TS2-1:M | Yes / NA | |

© 2023 AASHTO / ITE / NEMA Copy Per PRL Distribution Permission

| Protocol Requirements List (PRL) | | | | | | |
|---|---|---|---|---|---|---|
| **User Need ID** | **User Need** | **FR ID** | **Functional Requirement** | **Conformance** | **Support** | **Additional Specifications** |
| | | 3.5.2.1.11.2.9.7 | Enumerate I/O Map—ITS Cabinet SIU Inputs | ITS:M | Yes / NA | |
| | | 3.5.2.1.11.2.9.8 | Enumerate I/O Map—ITS Cabinet SIU Outputs | ITS:M | Yes / NA | |
| | | 3.5.2.1.11.2.9.9 | Enumerate I/O Map—Auxiliary Device Inputs | O | Yes / No | |
| | | 3.5.2.1.11.2.9.10 | Enumerate I/O Map—Auxiliary Device Outputs | O | Yes / No | |
| 2.5.2.1.13 (Intra) | Manage Intra-Cabinet Communications Configuration | | | O | Yes / No | |
| | | 3.5.2.1.12.1 | Determine Serial Bus 1 Device Present | ITS:M | Yes / NA | The ASC shall support at least ____ Serial Bus 1 Addresses (between 1 and 255). |
| | | 3.5.2.1.12.2.1 | Determine TS2 Port 1 Device Present | TS2-2:M | Yes / NA | The ASC shall support at least ____ TS2 Port1 Addresses (between 1 and 255). |
| | | 3.5.2.1.12.2.2 | Determine TS2 Port 1 Frame 40 Enable | TS2-2:M | Yes / NA | |
| 2.5.2.1.14 | Manage ADA Support | | | O | Yes / No | |
| | | 3.5.2.1.13.1.1 | Configure APS Push Button Minimum Press Time | M | Yes | |
| | | 3.5.2.1.13.1.2 | Configure APS Push Button to Phase Association | M | Yes | |
| | | 3.5.2.1.13.1.3 | Configure APS Extra Crossing Time | M | Yes | |
| | | 3.5.2.1.13.2 | Determine Maximum Number of Pedestrian Buttons | M | Yes | The ASC shall support at least ____ Pedestrian Push Button inputs (between 1 and 16). |
| 2.5.2.2 | Monitor Signal Operations Status | | | | | |
| 2.5.2.2.1 | Determine Controller Health | | | M | Yes | |
| | | 3.5.2.2.1.1.1 | Monitor Preempt Active | Preempt:M | Yes / NA | |
| | | 3.5.2.2.1.1.2 | Monitor Terminal and Facilities Flash | M | Yes | |
| | | 3.5.2.2.1.1.3 | Monitor Local Cycle Zero Alarm | M | Yes | |
| | | 3.5.2.2.1.1.4 | Monitor Local Override | M | Yes | |
| | | 3.5.2.2.1.1.5 | Monitor Coordination Alarm | Coord:M | Yes / NA | |
| | | 3.5.2.2.1.1.6 | Monitor Detector Fault | Detector:M | Yes / NA | |


© 2023 AASHTO / ITE / NEMA

| Protocol Requirements List (PRL) | | | | | | |
|---|---|---|---|---|---|---|
| **User Need ID** | **User Need** | **FR ID** | **Functional Requirement** | **Conformance** | **Support** | **Additional Specifications** |
| | | 3.5.2.2.1.1.7 | Monitor Non-Critical Alarm | M | Yes | |
| | | 3.5.2.2.1.1.8 | Monitor Stop Time Input Alarm | M | Yes | |
| | | 3.5.2.2.1.1.9 | Monitor Cycle Fault Alarm | M | Yes | |
| | | 3.5.2.2.1.1.10 | Monitor Coordination Fault | Coord:M | Yes / NA | |
| | | 3.5.2.2.1.1.11 | Monitor Coordination Fail Alarm | Coord:M | Yes / NA | |
| | | 3.5.2.2.1.1.12 | Monitor Cycle Fail Alarm | M | Yes | |
| | | 3.5.2.2.1.1.13 | Monitor SMU Flash Alarm | M | Yes | |
| | | 3.5.2.2.1.1.14 | Monitor Local Flash Alarm | M | Yes | |
| | | 3.5.2.2.1.1.15 | Monitor Local Free Alarm | M | Yes | |
| | | 3.5.2.2.1.1.16 | Monitor Coordination Active Alarm | Coord:M | Yes / NA | |
| | | 3.5.2.2.1.1.17 | Monitor Power Restart Alarm | Power:M | Yes / NA | |
| | | 3.5.2.2.1.1.18 | Monitor Low Battery Alarm | Power:O | Yes / No / NA | |
| | | 3.5.2.2.1.1.19 | Monitor Response Fault Alarm | M | Yes | |
| | | 3.5.2.2.1.1.20 | Monitor External Start | M | Yes | |
| | | 3.5.2.2.1.1.21 | Monitor Stop Time Alarm | M | Yes | |
| | | 3.5.2.2.1.1.22 | Monitor Offset Transitioning Alarm | M | Yes | |
| | | 3.5.2.2.1.1.23 | Monitor Stall Condition | M | Yes | The vendor shall list the ASC processes or services where a watchdog timer is maintained and is considered critical to the safe operation of the ASC. |
| | | 3.5.2.2.1.1.24 | Monitor Memory Fault | M | Yes | |
| | | 3.5.2.2.1.1.25 | Monitor Process Failure | M | Yes | |
| | | 3.5.2.2.1.1.26 | Monitor Communications Timeout | M | Yes | |
| | | 3.5.2.2.1.1.27 | Monitor Power Problems | Power:M | Yes / NA | |
| | | 3.5.2.2.1.1.28 | Monitor UPS Errors | UPS:O | Yes / No / NA | |
| | | 3.5.2.2.1.1.29 | Monitor Scheduler Errors | Scheduler:M | Yes / NA | |
| | | 3.5.2.2.1.1.30 | Monitor Signal Monitor Communications Error | O | Yes / No | |
| | | 3.5.2.2.1.1.31 | Monitor Signal Monitor Unit Presence | O | Yes / No | |
| | | 3.5.2.2.1.1.32 | Monitor USB Memory Device | O | Yes / No | |
| | | 3.5.2.2.1.1.33 | Monitor ASC Cabinet Temperature Alarm | Temp:M | Yes / NA | |
| | | 3.5.2.2.1.1.34 | Monitor ASC Cabinet Humidity Alarm | Humidity:M | Yes / NA | |
| | | 3.5.2.2.1.1.35 | Monitor Clock Failure | M | Yes | |

© 2023 AASHTO / ITE / NEMA Copy Per PRL Distribution Permission

| Protocol Requirements List (PRL) | | | | | | |
|---|---|---|---|---|---|---|
| **User Need ID** | **User Need** | **FR ID** | **Functional Requirement** | **Conformance** | **Support** | **Additional Specifications** |
| | | 3.5.2.2.1.1.36 | Monitor Preempt Maximum Presence Alarm | Preempt:O | Yes / No / NA | |
| | | 3.5.2.2.1.1.37 | Monitor RSU Watchdog Timer | CV:M | Yes / NA | |
| | | 3.5.2.2.1.1.38 | Monitor CV Certificate Faults | CV:O | Yes / No / NA | |
| | | 3.5.2.2.1.2 | Monitor Alarm Group State | M | Yes | The ASC shall support at least ____ Alarm Groups (between 1 and 255). |
| 2.5.2.2.2 | Determine Mode of Operation | | | | | |
| 2.5.2.2.2.1 (Unit) | Monitor Unit-Wide General Operations | | | O | Yes / No | |
| | | 3.5.2.2.2.1 | Monitor Unit Control Status | M | Yes | |
| | | 3.5.2.2.2.2 | Monitor External Minimum Recall | O | Yes / No | |
| | | 3.5.2.2.2.3 | Monitor Call to Non-Actuated 1 | O | Yes / No | |
| | | 3.5.2.2.2.4 | Monitor Call to Non-Actuated 2 | O | Yes / No | |
| | | 3.5.2.2.2.5 | Monitor Walk Rest Modifier | O | Yes / No | |
| | | 3.5.2.2.2.6 | Monitor Interconnect | O | Yes / No | |
| | | 3.5.2.2.2.7 (Dimming) | Monitor Dimming Enabled | O | Yes / No | |
| 2.5.2.2.2.2 | Monitor Flashing | | | Unit:M | Yes / NA | |
| | | 3.5.2.2.2.8 | Monitor Unit Flash Status | M | Yes | |
| 2.5.2.2.2.3 | Monitor Current Timing Pattern | | | Coord:M | Yes / NA | |
| | | 3.5.2.2.2.9.1 | Monitor Current Pattern Status | M | Yes | |
| | | 3.5.2.2.2.9.2 | Monitor Local Free Status | M | Yes | |
| | | 3.5.2.2.2.9.3 | Monitor Current Mode of Operation | M | Yes | |
| | | 3.5.2.2.2.9.4 | Monitor Programmed Pattern | M | Yes | |
| 2.5.2.2.2.4 | Monitor Current Cycle | | | Coord:M | Yes / NA | |
| | | 3.5.2.2.2.10.1 | Monitor Coordination Cycle Status | M | Yes | |
| | | 3.5.2.2.2.10.2 | Monitor Coordination Synchronization Status | M | Yes | |
| | | 3.5.2.2.2.10.3 | Monitor Current Split | M | Yes | |
| | | 3.5.2.2.2.10.4 | Monitor Current Offset | M | Yes | |
| 2.5.2.2.3 | Monitor Signal Indication | | | M | Yes | |
| | | 3.5.2.2.3.1 | Determine Maximum Number of Phase Groups | M | Yes | The ASC shall support at least ____ Phase Groups (between 1 and 255). |


© 2023 AASHTO / ITE / NEMA

| Protocol Requirements List (PRL) | | | | | | |
|---|---|---|---|---|---|---|
| **User Need ID** | **User Need** | **FR ID** | **Functional Requirement** | **Conformance** | **Support** | **Additional Specifications** |
| | | 3.5.2.2.3.2 | Monitor Phase Group Reds | M | Yes | |
| | | 3.5.2.2.3.3 | Monitor Phase Group Yellows | M | Yes | |
| | | 3.5.2.2.3.4 | Monitor Phase Group Greens | M | Yes | |
| | | 3.5.2.2.3.5 | Monitor Phase Group Don't Walks | M | Yes | |
| | | 3.5.2.2.3.6 | Monitor Phase Group Pedestrian Clearance | M | Yes | |
| | | 3.5.2.2.3.7 | Monitor Phase Group Walks | M | Yes | |
| | | 3.5.2.2.3.8 | Monitor Phase Group Flashing Yellow Arrow | O | Yes / No | |
| | | 3.5.2.2.3.9 | Monitor Phase Group Flashing Red Arrow | O | Yes / No | |
| 2.5.2.2.4 | Monitor Phase Status | | | M | Yes | |
| | | 3.5.2.2.4.1 | Monitor Phase Group Phase Ons | M | Yes | |
| | | 3.5.2.2.4.2 | Monitor Phase Group Phase Nexts | M | Yes | |
| | | 3.5.2.2.4.3 | Monitor Phase Group Vehicle Call | M | Yes | |
| | | 3.5.2.2.4.4 | Monitor Phase Group Pedestrian Call | M | Yes | |
| | | 3.5.2.2.4.5 | Monitor Phase Group Bicycle Call | Bicycle:M | Yes / NA | |
| | | 3.5.2.2.4.6 | Monitor Phase Group Transit Call | Transit:M | Yes / NA | |
| 2.5.2.2.5 | Monitor Ring Status | | | Ring:M | Yes / NA | |
| | | 3.5.2.2.5.1 | Monitor Ring Status | M | Yes | |
| | | 3.5.2.2.5.2 | Monitor Ring Termination Cause | M | Yes | |
| 2.5.2.2.6 | Monitor Channel Status | | | Channel:M | Yes / NA | |
| | | 3.5.2.2.6.1 | Determine Maximum Number of Channel Status Groups | M | Yes | |
| | | 3.5.2.2.6.2 | Monitor Channel Status Group Reds | M | Yes | |
| | | 3.5.2.2.6.3 | Monitor Channel Status Group Yellows | M | Yes | |
| | | 3.5.2.2.6.4 | Monitor Channel Status Group Greens | M | Yes | |
| 2.5.2.2.7 | Monitor Overlap Status | | | Overlap:M | Yes / NA | |
| | | 3.5.2.2.7.1 | Determine Maximum Number of Overlap Status Groups | M | Yes | |
| | | 3.5.2.2.7.2 | Monitor Overlap Status Group Reds | M | Yes | |
| | | 3.5.2.2.7.3 | Monitor Overlap Status Group Yellows | M | Yes | |

© 2023 AASHTO / ITE / NEMA

| Protocol Requirements List (PRL) | | | | | | |
|---|---|---|---|---|---|---|
| **User Need ID** | **User Need** | **FR ID** | **Functional Requirement** | **Conformance** | **Support** | **Additional Specifications** |
| | | 3.5.2.2.7.4 | Monitor Overlap Status Group Greens | M | Yes | |
| | | 3.5.2.2.7.5 | Monitor Overlap Status Group Flashing Yellow Arrows | O | Yes / No | |
| | | 3.5.2.2.7.6 | Monitor Overlap Status Group Flashing Red Arrows | O | Yes / No | |
| 2.5.2.2.8 | Monitor Preempt Input State | | | Preempt:M | Yes / NA | |
| | | 3.5.2.2.8.1 | Monitor Currently Active Preempt | M | Yes | |
| | | 3.5.2.2.8.2 | Monitor Current Preempt Inputs | M | Yes | |
| 2.5.2.2.9 | Monitor Preempt State | | | Preempt:O | Yes / NA | |
| | | 3.5.2.2.8.3 | Monitor Current Preempt State | M | Yes | |
| | | 3.5.2.2.8.4 | Monitor Current Gate Status | O | Yes / No | |
| 2.5.2.2.10 (SpecialFunc) | Monitor Special Function Outputs | | | O | Yes / No | |
| | | 3.5.2.2.9.1 | Determine Maximum Number of Special Functions | M | Yes | The ASC shall support at least ____ Special Functions (between 1 and 255). |
| | | 3.5.2.2.9.3 | Monitor Special Function Status | M | Yes | |
| | | 3.5.2.2.9.4 | Monitor Special Function Control Source | O | Yes / No | |
| 2.5.2.2.11 | Monitor Timebase Action Status | | | Scheduler:M | Yes / NA | |
| | | 3.5.2.2.10.1 | Monitor Timebase Action Status | M | Yes | |
| | | 3.5.2.2.10.2 | Monitor Timebase Timing Pattern Status | M | Yes | |
| 2.5.2.2.12 | Monitor Intra-Cabinet Communications Configuration | | | O | Yes / No | |
| | | 3.5.2.2.11.1 | Monitor TS2 Port 1 Status | TS2-2:M | Yes / NA | |
| | | 3.5.2.2.11.2 | Monitor TS2 Port 1 Fault Frame | TS2-2:M | Yes / NA | |
| | | 3.5.2.2.11.3 | Monitor Serial Bus 1 Status | ITS:M | Yes / NA | |
| 2.5.2.3 | Control Signal Operations | | | M | Yes | |
| 2.5.2.3.1 | Control ASC-Wide General Operations | | | M | Yes | |
| | | 3.5.2.3.1.1 | Control External Minimum Recall | M | Yes | |
| | | 3.5.2.3.1.2 | Control Call to Non-Actuated 1 | M | Yes | |
| | | 3.5.2.3.1.3 | Control Call to Non-Actuated 2 | O | Yes / No | |
| | | 3.5.2.3.1.4 | Control Walk Rest Modifier | M | Yes | |
| | | 3.5.2.3.1.5 | Control Interconnect | O | Yes / No | |


© 2023 AASHTO / ITE / NEMA

| Protocol Requirements List (PRL) | | | | | | |
|---|---|---|---|---|---|---|
| **User Need ID** | **User Need** | **FR ID** | **Functional Requirement** | **Conformance** | **Support** | **Additional Specifications** |
| | | 3.5.2.3.1.6 | Control Dimming Enabled | Dimming:M | Yes / NA | |
| | | 3.5.2.3.1.7 | Control Disable Remote Commands | O | Yes / No | |
| | | 3.5.2.3.1.8 | Acknowledge Local Cycle Zero Alarm | M | Yes | |
| | | 3.5.2.3.1.9 | Control Weather-Based Signal Operation Changes | O | Yes / No | |
| 2.5.2.3.2 | Command Timing Pattern | | | Coord:M | Yes / NA | |
| | | 3.5.2.3.2.1 | Command System Timing Pattern | M | Yes | |
| | | 3.5.2.3.2.2 | Command System Timing Pattern System Reference Point | M | Yes | |
| 2.5.2.3.3 (PhsCtrl) | Phase Requests | | | O | Yes / No | |
| | | 3.5.2.3.3.1 | Control Phase Group Phase Omits | M | Yes | |
| | | 3.5.2.3.3.2 | Control Phase Group Pedestrian Omits | M | Yes | |
| | | 3.5.2.3.3.3 | Control Phase Group Holds | M | Yes | |
| | | 3.5.2.3.3.4 | Control Phase Group Force Offs | O | Yes / No | |
| | | 3.5.2.3.3.5 | Control Phase Group Vehicle Calls | M | Yes | |
| | | 3.5.2.3.3.6 | Control Phase Group Pedestrian Calls | M | Yes | |
| | | 3.5.2.3.3.7 | Control Phase Group Bicycle Calls | Bicycle:M | Yes / NA | |
| | | 3.5.2.3.3.8 | Control Phase Group Transit Calls | Transit:M | Yes / NA | |
| 2.5.2.3.4 | Activate Preempt | | | Preempt:O | Yes / No | |
| | | 3.5.2.3.4.1 | Command Preempt Remote Activation | M | Yes | |
| 2.5.2.3.5 | Control Ring Operations | | | Ring:O | Yes / No / NA | |
| | | 3.5.2.3.5.1 | Control Ring Stop Time | M | Yes | |
| | | 3.5.2.3.5.2 | Control Ring Force Offs | M | Yes | |
| | | 3.5.2.3.5.3 | Control Ring Maximum 2 Time Settings | M | Yes | |
| | | 3.5.2.3.5.4 | Control Ring Maximum 3 Time Settings | O | Yes / No | |
| | | 3.5.2.3.5.5 | Control Ring Maximum Inhibit Settings | M | Yes | |
| | | 3.5.2.3.5.6 | Control Ring Pedestrian Recycle Settings | M | Yes | |

© 2023 AASHTO / ITE / NEMA

| Protocol Requirements List (PRL) | | | | | | |
|---|---|---|---|---|---|---|
| **User Need ID** | **User Need** | **FR ID** | **Functional Requirement** | **Conformance** | **Support** | **Additional Specifications** |
| | | 3.5.2.3.5.7 | Control Ring Red Rest Settings | M | Yes | |
| | | 3.5.2.3.5.8 | Control Ring Red Clearance Omit Settings | M | Yes | |
| | | 3.5.2.3.5.9 | Determine Maximum Number of Ring Control Groups | M | Yes | The ASC shall support at least ____ ring control groups. |
| 2.5.2.3.6 | Activate Special Function Output | | | SpecialFunc:O | Yes / No / NA | |
| | | 3.5.2.3.6.1 | Activate Special Function | M | Yes | |
| | | 3.5.2.3.6.2 | Release Special Function Control | M | Yes | |
| 2.5.2.3.7 | Control Frame 40 | | | TS1:O<br>TS2-2:O<br>TS2-1:O | Yes / No / NA | |
| | | 3.5.2.3.7.1 | Control TS2 Port 1 Frame 40 Messages | M | Yes | |
| 2.5.2.3.8 | Activate Action Plan | | | O | Yes / No | |
| | | 3.5.2.3.8 | Activate Action Plan | M | Yes | |
| 2.5.2.3.9 | Remote Manual Control | | | O | Yes / No | |
| | | 3.5.2.3.9.1 | Enable Manual Control | M | Yes | |
| | | 3.5.2.3.9.2 | Remote Manual Control Advance Command | M | Yes | |
| | | 3.5.2.3.9.3 | Configure Manual Control Timeout | M | Yes | |
| 2.5.3 | Manage Detectors | | | | | |
| 2.5.3.1 (Detector) | Manage Detector Configuration | | | M | Yes | |
| | | 3.5.3.1.1.1.1 | Configure Vehicle Volume Detectors | O | Yes / No | |
| | | 3.5.3.1.1.1.2 | Configure Vehicle Occupancy Detectors | O | Yes / No | |
| | | 3.5.3.1.1.1.3 (Speed) | Configure Vehicle Speed Detectors | O | Yes / No | |
| | | 3.5.3.1.1.1.4 | Configure Vehicle Detection Zone Length | O | Yes / No | |
| | | 3.5.3.1.1.1.5 | Configure Vehicle Travel Mode | O | Yes / No | |
| | | 3.5.3.1.1.1.6 | Configure Vehicle Detector Yellow Lock Call Enabled | O | Yes / No | |
| | | 3.5.3.1.1.1.7 | Configure Vehicle Detector Red Lock Call Enabled | O | Yes / No | |


© 2023 AASHTO / ITE / NEMA

| Protocol Requirements List (PRL) | | | | | | |
|---|---|---|---|---|---|---|
| **User Need ID** | **User Need** | **FR ID** | **Functional Requirement** | **Conformance** | **Support** | **Additional Specifications** |
| | | 3.5.3.1.1.1.8 | Configure Vehicle Detector Passage Enabled | O | Yes / No | |
| | | 3.5.3.1.1.1.9 | Configure Vehicle Detector Added Initial Time Enabled | O | Yes / No | |
| | | 3.5.3.1.1.1.10 | Configure Vehicle Detector Queue Enabled | O | Yes / No | |
| | | 3.5.3.1.1.1.11 | Configure Vehicle Detector Call Enabled | M | Yes | |
| | | 3.5.3.1.1.1.12 | Configure Vehicle Detector Call Phase | M | Yes | |
| | | 3.5.3.1.1.1.13 | Configure Vehicle Detector Switch Phase | M | Yes | |
| | | 3.5.3.1.1.1.14 | Configure Vehicle Detector Delay Time | M | Yes | |
| | | 3.5.3.1.1.1.15 | Configure Vehicle Detector Extend Time | M | Yes | |
| | | 3.5.3.1.1.1.16 | Configure Vehicle Detector Queue Limit Time | O | Yes / No | |
| | | 3.5.3.1.1.1.17 | Configure Vehicle Detector No Activity Time | M | Yes | |
| | | 3.5.3.1.1.1.18 | Configure Vehicle Detector Maximum Presence Time | M | Yes | |
| | | 3.5.3.1.1.1.19 | Configure Vehicle Detector Erratic Counts | M | Yes | |
| | | 3.5.3.1.1.1.20 | Configure Vehicle Detector Fail Time | O | Yes / No | |
| | | 3.5.3.1.1.1.21 | Configure Single Detector Speed Mode | Speed:M | Yes / NA | |
| | | 3.5.3.1.1.1.22 | Configure Paired Detector | Speed:M | Yes / NA | |
| | | 3.5.3.1.1.1.23 | Configure Paired Detector Placement | Speed:M | Yes / NA | |
| | | 3.5.3.1.1.1.24 | Configure Paired Detector Spacing | Speed:M | Yes / NA | |
| | | 3.5.3.1.1.1.25 | Configure Average Vehicle Length | Speed:M | Yes / No | |
| | | 3.5.3.1.1.2.1 | Configure Pedestrian Detector Call Phase | M | Yes | |
| | | 3.5.3.1.1.2.2 | Configure Pedestrian Detector No Activity Time | M | Yes | |

© 2023 AASHTO / ITE / NEMA

| Protocol Requirements List (PRL) | | | | | | |
|---|---|---|---|---|---|---|
| **User Need ID** | **User Need** | **FR ID** | **Functional Requirement** | **Conformance** | **Support** | **Additional Specifications** |
| | | 3.5.3.1.1.2.3 | Configure Pedestrian Detector Maximum Presence Time | M | Yes | |
| | | 3.5.3.1.1.2.4 | Configure Pedestrian Detector Erratic Counts | M | Yes | |
| | | 3.5.3.1.1.2.5 | Configure Pedestrian Detector Non-Lock Calls | O | Yes / No | |
| | | 3.5.3.1.1.2.6 | Configure Pedestrian Detector Alternate Pedestrian Timing | O | Yes / No | |
| | | 3.5.3.1.1.2.7 | Configure Pedestrian Detector Type | O | Yes / No | |
| 2.5.3.2 | Monitor Detector Status | | | O | Yes / No | |
| | | 3.5.3.1.2.1.1 | Determine Maximum Number of Vehicle Detectors | M | Yes | The ASC shall support at least ____ vehicle detectors (between 1 and 255). |
| | | 3.5.3.1.2.2.1 | Determine Maximum Number of Pedestrian Detectors | M | Yes | The ASC shall support at least ____ pedestrian detectors (between 1 and 255). |
| | | 3.5.3.2.1.1 | Determine Maximum Number of Vehicle Detector Status Groups | M | Yes | The ASC shall support at least ____ vehicle detector status groups (between 1 and 255). |
| | | 3.5.3.2.1.2 | Monitor Vehicle Detector Status Group Active | M | Yes | |
| | | 3.5.3.2.1.3 | Monitor Vehicle Detector Status Group Alarm Status | M | Yes | |
| | | 3.5.3.2.2.1 | Determine Maximum Number of Pedestrian Detector Status Groups | M | Yes | The ASC shall support at least ____ Pedestrian detector status groups (between 1 and 255). |
| | | 3.5.3.2.2.2 | Monitor Pedestrian Detector Status Active | O | Yes / No | |
| | | 3.5.3.2.2.3 | Monitor Pedestrian Detector Alarm Status | M | Yes | |
| 2.5.3.3 | Monitor Detector Health | | | O | Yes / No | |
| | | 3.5.3.3.1.1 | Monitor Vehicle Detector No Activity Fault | M | Yes | |
| | | 3.5.3.3.1.2 | Monitor Vehicle Detector Max Presence Fault | M | Yes | |

Copy Per PRL Distribution Permission
© 2023 AASHTO / ITE / NEMA

| Protocol Requirements List (PRL) | | | | | | |
|---|---|---|---|---|---|---|
| **User Need ID** | **User Need** | **FR ID** | **Functional Requirement** | **Conformance** | **Support** | **Additional Specifications** |
| | | 3.5.3.3.1.3 | Monitor Vehicle Detector Erratic Output Fault | M | Yes | |
| | | 3.5.3.3.1.4 | Monitor Vehicle Detector Communications Fault | M | Yes | |
| | | 3.5.3.3.1.5 | Monitor Vehicle Detector Configuration Fault | M | Yes | |
| | | 3.5.3.3.2.1 | Monitor Loop Vehicle Detector Watchdog Failure | O | Yes / No | |
| | | 3.5.3.3.2.2 | Monitor Loop Vehicle Detector Open Loop Failure | O | Yes / No | |
| | | 3.5.3.3.2.3 | Monitor Loop Vehicle Detector Shorted Loop Fault | O | Yes / No | |
| | | 3.5.3.3.2.4 | Monitor Loop Vehicle Detector Excessive Change Fault | O | Yes / No | |
| | | 3.5.3.3.3.1 | Monitor Pedestrian Detector No Activity Fault | M | Yes | |
| | | 3.5.3.3.3.2 | Monitor Pedestrian Detector Max Presence Fault | M | Yes | |
| | | 3.5.3.3.3.3 | Monitor Pedestrian Detector Erratic Output Fault | M | Yes | |
| | | 3.5.3.3.3.4 | Monitor Pedestrian Detector Communications Fault | M | Yes | |
| | | 3.5.3.3.3.5 | Monitor Pedestrian Detector Configuration Fault | M | Yes | |
| 2.5.3.4 | Control Detectors | | | O | Yes / No | |
| | | 3.5.3.4.1 | Control Vehicle Detector Reset | M | Yes | |
| | | 3.5.3.4.2 | Control Pedestrian Detector Reset | M | Yes | |
| | | 3.5.3.4.3 | Control Vehicle Detector Actuation | O | Yes / No | |
| | | 3.5.3.4.4 | Control Pedestrian Detector Actuation | O | Yes / No | |
| 2.5.3.5 | Manage Detector Data | | | O | Yes / No | |
| | | 3.5.3.5.1.1.1 | Configure Detector Data Sample Period | M | Yes | |
| | | 3.5.3.5.1.1.2 | Configure Detector Data Sample Period—Version 3 | M | Yes | |
| | | 3.5.3.5.2.1.1 | Monitor Detector Data Sequence | M | Yes | |

© 2023 AASHTO / ITE / NEMA

| Protocol Requirements List (PRL) | | | | | | |
|---|---|---|---|---|---|---|
| **User Need ID** | **User Need** | **FR ID** | **Functional Requirement** | **Conformance** | **Support** | **Additional Specifications** |
| | | 3.5.3.5.2.1.2 | Determine Detector Data Active Detectors | M | Yes | |
| | | 3.5.3.5.2.1.3 | Monitor Volume Data | O | Yes / No | |
| | | 3.5.3.5.2.1.4 | Monitor Average Speed | Speed:M | Yes / NA | |
| | | 3.5.3.5.2.1.5 | Monitor Occupancy Data | O | Yes / No | |
| | | 3.5.3.5.2.1.6 | Monitor Vehicle Detector Data Alarms | M | Yes | |
| | | 3.5.3.5.2.1.7 | Monitor Detector Data Sample Time | M | Yes | |
| | | 3.5.3.5.2.1.8 | Monitor Detector Data Sample Duration | M | Yes | |
| | | 3.5.3.6.1.1 | Configure Pedestrian Data Collection Sample Period | M | Yes / No | |
| | | 3.5.3.6.2.1 | Monitor Pedestrian Counts | O | Yes / No | |
| | | 3.5.3.6.2.2 | Monitor Pedestrian Detector Actuations | O | Yes / No | |
| | | 3.5.3.6.2.3 | Monitor Pedestrian Detector Data Alarms | O | Yes / No | |
| | | 3.5.3.6.2.4 | Monitor Pedestrian Services | O | Yes / No | |
| | | 3.5.3.6.2.5 | Determine Pedestrian Detector Data Active Detectors | O | Yes / No | |
| | | 3.5.3.6.2.6 | Monitor Pedestrian Detector Data Sample Time | O | Yes / No | |
| | | 3.5.3.6.2.7 | Monitor Pedestrian Detector Data Sample Duration | O | Yes / No | |
| | | 3.5.3.6.2.8 | Monitor Pedestrian Detector Data Sequence | O | Yes / No | |
| 2.5.4 (CV) | Manage Connected Vehicles Interface | | | O | Yes / No | |
| 2.5.4.1 | Connected Vehicle Manager: Management Station–ASC Interface | | | M | Yes / No | |
| 2.5.4.1.1 | Manage RSU Interface | | | M | Yes | |
| | | 3.5.4.1.1.1 | Configure RSU Interface | M | Yes | |
| | | 3.5.4.1.1.2 | Configure Logical RSU Ports | M | Yes | |
| | | 3.5.4.1.1.3 | Configure RSU Interface Polling Period | O | Yes / No | |
| 2.5.4.1.2 | Manage RSU Interface Watchdog | | | O | Yes / No | |
| | | 3.5.4.1.2.1 | Configure RSU Interface Watchdog | M | Yes | |


© 2023 AASHTO / ITE / NEMA

| Protocol Requirements List (PRL) | | | | | | |
|---|---|---|---|---|---|---|
| **User Need ID** | **User Need** | **FR ID** | **Functional Requirement** | **Conformance** | **Support** | **Additional Specifications** |
| | | 3.5.4.1.2.2 | Monitor RSU Interface Watchdog Timer | M | Yes | |
| 2.5.4.1.3 | Manage Signal Phase and Timing Data | | | CV:M | Yes / NA | |
| | | 3.5.4.1.3.1 | Enable Signal Phase and Timing Data | M | Yes | |
| | | 3.5.4.1.3.4 | Retrieve Signal Phase and Timing Generation Time | O | Yes / No | |
| | | 3.5.4.1.3.6.2.6 | Monitor Movement Minimum End Time V2 | M | Yes | |
| | | 3.5.4.1.3.6.2.7 | Monitor Movement Maximum End Time V2 | M | Yes | |
| | | 3.5.4.1.3.6.2.8 | Monitor Movement Likely End Time V2 | O | Yes / No | |
| | | 3.5.4.1.3.6.2.9 | Monitor Movement Likely End Time Confidence V2 | O | Yes / No | |
| | | 3.5.4.1.3.6.2.10 | Monitor Movement Next Occurrence V2 | M | Yes | |
| | | 3.5.4.1.3.6.2.11 | Monitor Next Movement Minimum End Time | M | Yes | |
| | | 3.5.4.1.3.6.2.12 | Monitor Next Movement Maximum End Time | M | Yes | |
| | | 3.5.4.1.3.6.2.13 | Monitor Next Movement Start Time | M | Yes | |
| | | 3.5.4.1.3.6.2.14 | Determine Maximum Number of Movement Events | M | Yes | |
| | | 3.5.4.1.3.6.3.4 | Configure Queue Detectors for Movement Assistance V2 | MvtQueue:M | Yes / NA | |
| | | 3.5.4.1.3.6.3.5 | Configure Pedestrian Detectors for Movement Assistance V2 | MvtConflict:O.13 (1..*) | Yes / No / NA | |
| | | 3.5.4.1.3.6.3.6 | Configure Bicycle Detectors for Movement Assistance V2 | MvtConflict:O.13 (1..*) | Yes / No / NA | |
| | | 3.5.4.1.3.6.4.6 (MvtQueue) | Monitor Lane Connection Queue Length V2 | O | Yes / No | |
| | | 3.5.4.1.3.6.4.7 (MvtConflict) | Monitor Lane Connection Traveler Detection V2 | O | Yes / No | |
| | | 3.5.4.1.3.6.5.6 (SpdAdvice) | Configure Advisory Speed Type V2 | O | Yes / No | |

© 2023 AASHTO / ITE / NEMA
Copy Per PRL Distribution Permission

| Protocol Requirements List (PRL) | | | | | | |
|---|---|---|---|---|---|---|
| **User Need ID** | **User Need** | **FR ID** | **Functional Requirement** | **Conformance** | **Support** | **Additional Specifications** |
| | | 3.5.4.1.3.6.5.7 | Configure Advisory Speed V2 | SpdAdvice:O | Yes / No / NA | |
| | | 3.5.4.1.3.6.5.8 | Configure Advisory Speed Zone V2 | SpdAdvice:O | Yes / No / NA | |
| | | 3.5.4.1.3.6.5.9 | Configure Advisory Speed Vehicle Type V2 | SpdAdvice:O | Yes / No / NA | |
| | | 3.5.4.1.3.6.8 | Monitor Movement State V2 | M | Yes | |
| | | 3.5.4.1.3.6.9 | Monitor Next Movement State | M | Yes | |
| | | 3.5.4.1.3.6.10 | Monitor Movement Status V2 | M | Yes | |
| | | 3.5.4.1.3.7.1 | Configure Concurrent Enabled Lanes | M | Yes | |
| | | 3.5.4.1.3.7.4 | Configure Enabled Lanes by Time of Day | M | Yes | |
| | | 3.5.4.1.3.7.5 | Determine Lanes Enabled | M | Yes | |
| | | 3.5.4.1.3.7.6 | Command Enabled Lanes V2 | M | Yes | |
| | | 3.5.4.1.3.10 | Enable Signal Phase and Timing Data Exchange | M | Yes | |
| | | 3.5.4.1.3.11 | Configure Road Authority | M | Yes | |
| | | 3.5.4.1.3.12.1 | Monitor Manual Control Indication | M | Yes | |
| | | 3.5.4.1.3.12.2 | Monitor Stop Indication | M | Yes | |
| | | 3.5.4.1.3.12.3 | Monitor Failure Flash Indication | M | Yes | |
| | | 3.5.4.1.3.12.4 | Monitor Preemption Operation Indication | M | Yes | |
| | | 3.5.4.1.3.12.5 | Monitor Priority Operation Indication | M | Yes | |
| | | 3.5.4.1.3.12.6 | Monitor Fixed Time Control Indication | M | Yes | |
| | | 3.5.4.1.3.12.7 | Monitor Non-Fixed Time Control Indication | M | Yes | |
| | | 3.5.4.1.3.12.8 | Monitor Standby Operation Indication | M | Yes | |
| | | 3.5.4.1.3.12.9 | Monitor Controller Failure | M | Yes | |
| | | 3.5.4.1.3.12.10 | Monitor MAP Message Validity | M | Yes | |
| | | 3.5.4.1.3.12.11 | Monitor SPaT Data Validity | M | Yes | |
| | | 3.5.4.1.3.13 | Mark SPaT Invalid—Controller | M | Yes | |
| | | 3.5.4.1.3.14 | Mark SPaT Invalid—Port | O | Yes / No | |
| | | 3.5.4.1.3.15 | Mark MAP Message Invalid—Controller | M | Yes | |
| | | 3.5.4.1.3.16 | Mark MAP Message Invalid—Port | O | Yes / No | |
| | | 3.5.4.1.3.17.1 | Determine Maximum Number of Signal Groups | M | Yes | |


© 2023 AASHTO / ITE / NEMA

| Protocol Requirements List (PRL) | | | | | | |
|---|---|---|---|---|---|---|
| **User Need ID** | **User Need** | **FR ID** | **Functional Requirement** | **Conformance** | **Support** | **Additional Specifications** |
| | | 3.5.4.1.3.17.2 | Configure Signal Group Intersection Mapping | M | Yes | |
| | | 3.5.4.1.3.17.3 | Configure Signal Group Control Source | M | Yes | |
| | | 3.5.4.1.3.17.4 | Configure Signal Group Indication Types | M | Yes | |
| | | 3.5.4.1.3.17.5 | Configure Signal Group Permissive Control Source | M | Yes | |
| | | 3.5.4.1.3.17.6 | Configure Signal Group Lanes | M | Yes | |
| | | 3.5.4.1.3.17.7 | Determine Maximum Number of Signal State Entries | M | Yes | |
| | | 3.5.4.1.3.17.8 | Configure Signal State Parameters | M | Yes | |
| | | 3.5.4.1.3.18 | Retrieve Signal Phase and Timing Time Point V2 | M | Yes | |
| 2.5.4.1.4 | Exchange Connected Devices Data for Operational Performance Data | | | Perform:O | Yes / No / NA | |
| | | 3.5.1.5.1.1 | Enable/Disable Collection of Operational Performance Data | M | Yes | |
| | | 3.5.1.5.1.2 | Start Collection of Operational Performance Data on Specific Date/Time | O | Yes / No | |
| | | 3.5.1.5.1.3 | End Collection of Operational Performance Data on Specific Date/Time | O | Yes / No | |
| | | 3.5.1.5.1.4 | Configure Collection of Operational Performance Data | O | Yes / No | |
| | | 3.5.1.5.2.1 | Determine Collection of Operational Performance Data | M | Yes | |
| | | 3.5.1.5.2.2 | Determine Operational Performance Data Collection Capabilities | M | Yes | |
| | | 3.5.1.5.3.1 | Monitor Operational Performance Data | O | Yes / No | |
| | | 3.5.1.5.3.2 | Retrieve Operational Performance Data | O | Yes / No | |
| | | 3.5.1.5.3.3 | Retrieve Operational Performance Data—Time Range | O | Yes / No | |

© 2023 AASHTO / ITE / NEMA

| Protocol Requirements List (PRL) | | | | | | |
|---|---|---|---|---|---|---|
| **User Need ID** | **User Need** | **FR ID** | **Functional Requirement** | **Conformance** | **Support** | **Additional Specifications** |
| | | 3.5.1.5.3.4 | Retrieve Operational Performance Data—Event Code | O | Yes / No | |
| | | 3.5.4.3.3.1.1 | Provide Actuation Report [Deprecated] | X | NA | |
| 2.5.4.2 | Connected Vehicle Manager: Management Station – CV Roadside Process Interface [Deprecated] | | | X | NA | |
| 2.5.4.2.1 | Manage Roadway Geometrics Information [Deprecated] | | | X | NA | |
| 2.5.4.2.2 | Manage Movement Configuration for Connected Devices [Deprecated] | | | X | NA | |
| 2.5.4.2.3 | Manage Collection of Connected Devices Data [Deprecated] | | | X | NA | |
| 2.5.4.2.4 | Monitor Broadcasted MAP Messages [Deprecated] | | | X | NA | |
| 2.5.4.2.5 | Monitor Broadcasted SPaT Messages [Deprecated] | | | X | NA | |
| 2.5.4.3 | Connected Vehicle Manager: ASC – CV Roadside Process Interface | | | CV:M | Yes / NA | |
| 2.5.4.3.1 | Exchange Current and Next Movement Information | | | CV:M | Yes / NA | |
| | | 3.5.4.3.1.1.3.9 | Provide Movement Time Point V2 | M | Yes | |
| | | 3.5.4.3.1.1.3.10 | Provide Movement State V2 | M | Yes | |
| | | 3.5.4.3.1.1.3.11 | Provide Movement Minimum End Time V2 | M | Yes | |
| | | 3.5.4.3.1.1.3.12 | Provide Movement Maximum End Time V2 | M | Yes | |
| | | 3.5.4.3.1.1.3.13 | Provide Movement Likely End Time V2 | O | Yes / No | |
| | | 3.5.4.3.1.1.3.14 | Provide Movement Likely End Time Confidence V2 | O | Yes / No | |
| | | 3.5.4.3.1.1.3.15 | Provide Movement Next Occurrence V2 | M | Yes | |
| | | 3.5.4.3.1.1.3.16 | Provide Next Movement State | M | Yes | |
| | | 3.5.4.3.1.1.3.17 | Provide Next Movement Minimum End Time | M | Yes | |
| | | 3.5.4.3.1.1.3.18 | Provide Next Movement Maximum End Time | M | Yes | |
| | | 3.5.4.3.1.1.3.19 | Provide Next Movement Start Time | M | Yes | |
| | | 3.5.4.3.1.1.4.7 | Provide Lane Connection Queue Length V2 | O | Yes / No | |

Copy Per PRL Distribution Permission
© 2023 AASHTO / ITE / NEMA

| Protocol Requirements List (PRL) | | | | | | |
|---|---|---|---|---|---|---|
| **User Need ID** | **User Need** | **FR ID** | **Functional Requirement** | **Conformance** | **Support** | **Additional Specifications** |
| | | 3.5.4.3.1.1.4.8 | Provide Lane Connection Traveler Detection V2 | O | Yes / No | |
| | | 3.5.4.3.1.1.5.6 | Provide Advisory Speed Type V2 | O | Yes / No | |
| | | 3.5.4.3.1.1.5.7 | Provide Advisory Speed V2 | O | Yes / No | |
| | | 3.5.4.3.1.1.5.8 | Provide Advisory Speed Zone V2 | O | Yes / No | |
| | | 3.5.4.3.1.1.5.9 | Provide Advisory Speed Vehicle Type V2 | O | Yes / No | |
| | | 3.5.4.3.1.1.7 | Provide Road Authority ID | M | Yes | |
| | | 3.5.4.3.1.1.8 | Provide Signal Phase and Timing Intersection Status V2 | M | Yes | |
| | | 3.5.4.3.1.1.9 | Provide SPaT Information to a CV Roadside Process | M | Yes | |
| | | 3.6.3.1 | SPaT Maximum Transmission Start Time | M | Yes / NA | The Maximum Transmission Start Time for all SPaT data shall be ___ milliseconds (Default=10). |
| | | 3.6.3.2 | Movement Time Point Minimum Transmission Rate | M | Yes / NA | The Movement Time Point Minimum Transmission Rate shall be once per _____ milliseconds (Default=100). |
| | | 3.6.3.6 | SPaT Maximum Transmission Rate | M | Yes / NA | |
| | | 3.6.3.7 | SPaT Time Accuracy | M | Yes / NA | |
| 2.5.4.3.2 | Exchange Next Occurrence of a Movement | | | CV:M | Yes / NA | |
| | | 3.5.4.3.1.1.3.15 | Provide Movement Next Occurrence V2 | M | Yes | |
| | | 3.6.3.1 | SPaT Maximum Transmission Start Time | M | Yes / NA | The Maximum Transmission Start Time for all SPaT data that changed shall be ___ milliseconds (Default=10). |
| | | 3.6.3.2 | Movement Time Point Minimum Transmission Rate | M | Yes / NA | The Movement Time Point Minimum Transmission Rate shall be once per _____ milliseconds (Default=100). |
| | | 3.6.3.6 | SPaT Maximum Transmission Rate | M | Yes / NA | |
| | | 3.6.3.7 | SPaT Time Accuracy | M | Yes / NA | |
| 2.5.4.3.3 | Exchange Presence of Connected Devices | | | O | Yes / No | |

© 2023 AASHTO / ITE / NEMA Copy Per PRL Distribution Permission

| Protocol Requirements List (PRL) | | | | | | |
|---|---|---|---|---|---|---|
| **User Need ID** | **User Need** | **FR ID** | **Functional Requirement** | **Conformance** | **Support** | **Additional Specifications** |
| | | 3.5.4.3.3.1.1 | Retrieve Actuation Report (ASC) | O.21(1..*) | Yes / No / NA | |
| | | 3.5.4.3.3.1.2 | Retrieve Detection Report (ASC) | O.21(1..*) | Yes / No / NA | |
| 2.5.4.3.4 | Exchange Roadway Geometrics Information | | | O | Yes / No | |
| | | 3.5.4.3.4.1.1 | Retrieve MAP Plan in Effect | M | Yes / NA | |
| | | 3.5.4.3.4.3 | Confirm MAP Plan Compatibility | M | Yes | |
| 2.5.4.3.5 | Exchange Movement Configuration | | | CV:M | Yes / NA | |
| | | 3.5.4.3.1.1.3.10 | Provide Movement State V2 | M | Yes | |
| | | 3.5.4.1.3.17.2 | Configure Signal Group Intersection Mapping | M | Yes | |
| | | 3.5.4.1.3.17.3 | Configure Signal Group Control Source | M | Yes | |
| 2.5.5 | Backward Compatibility Features | | | | | |
| 2.5.5.1 | Backward Compatible with NTCIP 1202 v01 | | | O | Yes / No | . |
| | | 3.5.5.1 | NTCIP 1202 v01—Configure Special Function State | O | Yes / No | |
| 2.5.5.2 | Backward Compatible with NTCIP 1202 v02 | | | NA | NA | |
| 2.5.5.3 | Backward Compatible with NTCIP 1202 v03A | | | O | Yes / No | |
| | | 3.5.2.1.14.1.1.30 | Configure Block Object Get Control—Version 3 Additional Channel Data [Deprecated] | O | Yes / No | |
| | | 3.5.2.1.14.1.1.43 | Configure Block Object Get Control—I/O Input Mapping Status Data [Deprecated] | O | Yes / No | |
| | | 3.5.2.1.14.1.1.45 | Configure Block Object Get Control—I/O Output Mapping Status Data [Deprecated] | O | Yes / No | |
| | | 3.5.2.1.14.1.1.47 | Configure Block Object Get Control—Connected Vehicle Configuration Data [Deprecated] | O | Yes / No | |
| | | 3.5.2.1.14.1.1.51 | Configure Block Object Get Control—Connected Vehicle Detector Configuration Data [Deprecated] | O | Yes / No | |
| | | 3.5.2.1.14.1.1.52 | Configure Block Object Get Control—Connected Vehicle Detection Zone Configuration Data [Deprecated] | O | Yes / No | |

Copy Per PRL Distribution Permission © 2023 AASHTO / ITE / NEMA

| Protocol Requirements List (PRL) | | | | | | |
|---|---|---|---|---|---|---|
| **User Need ID** | **User Need** | **FR ID** | **Functional Requirement** | **Conformance** | **Support** | **Additional Specifications** |
| 2.6 | Security | | | M | Yes | |
| 2.6.1 | Manage Authentication | | | M | Yes | |
| | | H.1.1.8.1 | Configure Security Definitions | M | Yes | |
| | | H.1.2.4.1 | Determine Security Definitions | M | Yes | |
| 2.6.2 | Manage Accessibility | | | M | Yes | |
| | | 3.4.4.1 | Configure Access | M | Yes | |
| | | 3.4.4.2 | Determine Current Access Settings | M | Yes | |
| 2.6.3 | Manage Users | | | M | Yes | |
| | | 3.4.4.1 | Configure Access | M | Yes | |
| | | 3.4.4.2 | Determine Current Access Settings | M | Yes | |
| 2.6.4 | Log User Access | | | O | Yes / No | |
| | | 3.5.1.6.1 | Configure ASC Clock Source | O | Yes / No | |
| | | 3.5.1.6.2 | Determine ASC Clock Status | O | Yes / No | |
| | | 3.5.1.6.3 | Determine Current ASC Clock Source | O | Yes / No | |
| | | 3.5.1.6.4 | Determine Available ASC Clock Sources | O | Yes / No | |
| | | H.1.1.5.1 | Configure Time | M | Yes | |
| | | H.1.1.5.2 | Configure Time Zone | TimeZone:O | Yes / No / NA | |
| | | H.1.1.5.3 | Configure Daylight Saving Mode | DST:O | Yes / No / NA | |
| | | H.1.1.5.4 | Determine Time Setting | M | Yes | |
| | | H.1.1.5.5 (TimeZone) | Determine Time Zone Setting | O | Yes / No | |
| | | H.1.1.5.6 (DST) | Determine Daylight Saving Mode Setting | O | Yes / No | |
| | | H.1.1.5.7 | Monitor Current Time | M | Yes | |
| | | H.1.3.1.1 | Retrieve Current Configuration of Logging Service | M | Yes | |
| | | H.1.3.1.2 | Configure Event Logging Service | M | Yes | |
| | | H.1.3.1.3 | Retrieve Event Logged Data | M | Yes | |
| | | H.1.3.1.5 | Determine Capabilities of Event Logging Service | M | Yes | |
| | | H.1.3.1.6 | Determine Number of Logged Events per Event Class | M | Yes | |

© 2023 AASHTO / ITE / NEMA

| Protocol Requirements List (PRL) | | | | | | |
|---|---|---|---|---|---|---|
| **User Need ID** | **User Need** | **FR ID** | **Functional Requirement** | **Conformance** | **Support** | **Additional Specifications** |
| | | H.1.3.1.7 | Support a Number of Events to Store in Log | M | Yes | The ASC shall be capable of storing at least ____ events in the event log file (up to 65535). |
| | | H.1.3.1.9 | Determine Total Number of Logged Events | O | Yes / No | |
| | | H.1.3.1.10 | Determine Number of Events Within a Class | M | Yes | |
| | | H.1.3.2.1 | Record and Timestamp Events | M | Yes | |
| | | H.1.3.2.2 | Support a Number of Event Classes | M | Yes | The ASC shall support at least ____ event classes. |
| | | H.1.3.2.3 | Support a Number of Events to Log | M | Yes | The ASC shall be able to log at least ____ events. |
| | | H.1.3.2.4.1 | Support On-Change Events | M | Yes | |
| | | H.1.3.2.4.6 | Support Bit Flag Events | M | Yes | |
| | | H.1.3.2.4.7 | Support Event Monitoring on Any Data | M | Yes | |
| | | 3.6.1 | Response Time for Requests | M | Yes | The Response Time for all requests shall be ___ milliseconds (5-500: Default=25). |
| 2.6.5 | Manage Security Between ASC and Other Interfaces | | | O | Yes / No | |
| | | H.1.1.8.1 | Configure Security Definitions | M | Yes | |
| | | H.1.2.4.1 | Determine Security Definitions | M | Yes | |


© 2023 AASHTO / ITE / NEMA

## 3.4 Architectural Requirements

Requirements for communication capabilities follow.

### 3.4.1 Support Basic Communications Requirements

Requirements for making requests follow.

#### 3.4.1.1 Retrieve Data

Upon request from a management station, the ASC shall provide the data requested.

#### 3.4.1.2 Deliver Data

Upon request from a management station, the ASC shall receive the data (e.g., configuration data, commands) provided.

#### 3.4.1.3 Explore Data

Upon request from a management station, the ASC shall allow dynamic discovery of the data concepts and data instances supported by the ASC.

#### 3.4.1.4 SNMP Requirements

The requirements for SNMP conformance follow.

##### 3.4.1.4.1 Monitor SNMP Information

Upon request from a management station, the ASC shall return basic instrumentation and control information of the SNMP device.

##### 3.4.1.4.2 Monitor Successful SNMP GET Requests

Upon request from a management station, the ASC shall return the total number of MIB objects that have been retrieved successfully by the SNMP protocol entity as the result of receiving valid SNMP Get-Request and Get-Next PDUs.

##### 3.4.1.4.3 Monitor Valid SNMP SET Requests

Upon request from a management station, the ASC shall return the total number of MIB objects that have been altered successfully by the device as the result of receiving valid SNMP Set-Request PDUs.

##### 3.4.1.4.4 Monitor SNMP Traps

Upon request from a management station, the ASC shall return the total number of SNMP Trap PDUs that have been generated by the device.

##### 3.4.1.4.5 Enable Authentication Traps

Upon request from a management station, the ASC shall store whether the SNMP agent process is permitted to generate authentication-failure traps.

© 2023 AASHTO / ITE / NEMA Do Not Copy Without Written Permission

### 3.4.2 Support Logged Data Requirements

The requirements for managing the logged data are defined in Annex H.1.3.

### 3.4.3 Support Exception Reporting Requirements

The requirements for exception reporting are defined in Annex H.1.1.10.

### 3.4.4 Manage Access Requirements

The requirements for ASC access management follow.

#### 3.4.4.1 Configure Access

Upon request from a management station, the ASC shall allow the administrator at the management station to configure access settings for all access levels. The agency specification identifies the number of access levels that the ASC is required to support. If the specification does not define the number of access levels, the ASC is required to support at least one access level in addition to the administrator access level.

> Note: Access levels are not the same as number of users because several users might share the same access level. Access levels are managed within this function (and within the ASC), while users might be managed within either or both the ASC and the central system. For the purpose of this function, the access level definitions manage the access to functions within the ASC.

#### 3.4.4.2 Determine Current Access Settings

Upon request from a management station, the ASC shall allow the administrator at the management station to determine the current access settings.

## 3.5 Data Exchange and Operational Environment Requirements

Data exchange requirements for an ASC follows.

### 3.5.1 ASC Configuration Management Requirements

The requirements for managing an ASC configuration follow.

#### 3.5.1.1 Manage ASC Location Requirements

The requirements for managing the physical location of an ASC follow.

##### 3.5.1.1.1 Configure ASC Location

This functional requirement is only needed if there is no external GNSS or similar geopositioning device attached to the ASC to allow a management station to set the location of the ASC. Upon request from the management station, the ASC shall store the location of the ASC, as provided within the request. The ASC location consists of the latitude, longitude, and elevation. The latitude and longitude are measured in micro degrees (10^-6 degrees) based on the WGS-84 (World Geodetic System 1984). The elevation of the ASC is in meters above mean sea level, and is measured to the base of the structure for a permanent ASC.

##### 3.5.1.1.2 Configure ASC Location—Antenna Offset

If an external GNSS or similar geopositioning device is attached to the ASC, upon request from the management station, the ASC shall store the offset in elevation, in meters, between the antenna used by

Do Not Copy Without Written Permission © 2023 AASHTO / ITE / NEMA

a GNSS or similar geopositioning device and the base of the structure for a permanent ASC. A geographic position provided by a GNSS (or similar) device is usually based on the location of the antenna. Generally, the longitude and latitude of the antenna is the same location as the ASC, but the height of the antenna will normally be higher than the base of the structure. This requirement corrects the GNSS reading, which includes the elevation of the antenna, for the base of the structure.

#### 3.5.1.2 Manage Communications Requirements

An ASC typically has several communications ports for exchanging information with the cabinet subsystems and other external devices in the cabinet. There are different potential ports configurations that might be used, including Ethernet, RS-232, and dial-up, as well as ports to connect to wireless infrastructures such as Wi-Fi, cellular, or others. Additionally, an ASC is likely to have at least two ports for external communications (one for communications with a central management system and one to connect to a local port to be used by authorized persons interacting with the ASC directly), but additional ports might be present, particularly for interconnecting neighboring controllers and/or when connecting to a “connected vehicle” roadside equipment (RSE) device.

##### 3.5.1.2.1 Configure Communications Requirements

The requirements for configuring the communications ports in the ASC follow.

###### 3.5.1.2.1.1 Enable/Disable Communications Port

Upon request from a management station, the ASC shall enable or disable a communications port on the ASC.

###### 3.5.1.2.1.2 Configure ASC Ethernet Ports

Upon request from a management station, the ASC shall store the communications parameters of an Ethernet port on the ASC, including information such as the IP address, MAC address, gateway address, subnet mask, and whether DHCP is enabled.

###### 3.5.1.2.1.3 Configure ASC Asynchronous Serial Ports

Upon request from a management station, the ASC shall store the communications parameters of the asynchronous serial port on the ASC, including information such as the baud rate, full duplex or half duplex, and the port address.

###### 3.5.1.2.1.4 Configure ASC Synchronous Serial Ports

Upon request from a management station, the ASC shall store the communications parameters of a synchronous serial port on the ASC, including information such as the baud rate, full duplex or half duplex, and the port address.

###### 3.5.1.2.1.5 Configure ASC Communications Protocol—Serial Ports

Upon request from a management station, the ASC shall store the communications protocol to be used on each individual communications port in the ASC. Valid values are NTCIP, Port 1, Serial Bus #1, Serial Bus #3, and Console. This requirement applies to only serial ports supported by the ASC.

##### 3.5.1.2.2 Retrieve Communications Requirements

The requirements for retrieving information about the communications ports in the ASC follow.

© 2023 AASHTO / ITE / NEMA Do Not Copy Without Written Permission

#### 3.5.1.2.2.1 Determine Number of ASC Communications Ports

Upon request from a management station, the ASC shall return the number of communications ports supported by the ASC.

### 3.5.1.2.3 Monitor Communications Requirements

The requirements for monitoring information about the communications ports in the ASC follow.

#### 3.5.1.2.3.1 Monitor Response Timeout—Ethernet

Upon request from a management station, the ASC shall return the number of the response timeouts that have occurred on an Ethernet port within a specified period of time. A response timeout is defined as the time that an expected response is not received by the ASC within a specified period of time.

#### 3.5.1.2.3.2 Monitor Response Timeout—Serial

Upon request from a management station, the ASC shall return the number of the response timeouts that have occurred on a serial communications port within a specified period of time. A response timeout is defined as the time that an expected response is not received by the ASC within a specified period of time.

#### 3.5.1.2.3.3 Monitor Data Link Errors—Ethernet

Upon request from a management station, the ASC shall return the number of the communications errors that have occurred on an Ethernet port. Communications errors include a bad CRC and framing errors resulting in a corrupted message.

#### 3.5.1.2.3.4 Monitor Data Link Errors—Serial

Upon request from a management station, the ASC shall return the number of the communications errors that have occurred on a serial communications port. Communications errors include a bad CRC and framing errors resulting in a corrupted message.

#### 3.5.1.2.3.5 Monitor Polling Timeout—Port 1

Upon request from a management station, the ASC shall return the number of the polling timeouts that have occurred on a TS 2 Port 1 within a specified period of time (24 hours). A polling timeout occurs when no communications polls are received by the ASC within a specified period of time.

#### 3.5.1.2.3.6 Monitor Polling Timeout—Serial Bus

Upon request from a management station, the ASC shall return the number of the polling timeouts that have occurred on Serial Bus 1 in the ITS Cabinet within a specified period of time (24 hours). A polling timeout occurs when no communications polls are received by the ASC within a specified period of time.

### 3.5.1.2.4 Perform Communications Diagnostics Requirements

Requirements for performing communications diagnostics within the ASC follow.

#### 3.5.1.2.4.1 Set Communications Port to Loopback Mode

Upon request from a management station, the ASC shall allow setting and resetting a communications port in/from a loopback mode.

Do Not Copy Without Written Permission © 2023 AASHTO / ITE / NEMA

#### 3.5.1.2.4.2 Set Communications Port to Echo Mode

Upon request from a management station, the ASC shall allow setting and resetting a communications port in/from an echo mode.

### 3.5.1.3 Retrieve Cabinet Environment Requirements

An ASC system includes a cabinet within which the controller subsystems reside, including the controller unit. Each cabinet has at least one door, and many cabinets have fans that turn on when temperature thresholds have been reached. Up to 255 different cabinet environmental devices can be monitored. The requirements for monitoring the operating environment of the cabinet with the ASC follow.

#### 3.5.1.3.1 Monitor Cabinet Door Status

Upon request from a management station, the ASC shall return the status (open or closed) of each door of the cabinet to be monitored in which the ASC and cabinet subsystems are housed.

#### 3.5.1.3.2 Monitor Cabinet Fan Status

Upon request from a management station, the ASC shall return the status (on or off) of each fan in the ASC cabinet.

#### 3.5.1.3.3 Monitor Cabinet Heater Status

Upon request from a management station, the ASC shall return the status (on or off) of each heater in the ASC cabinet.

#### 3.5.1.3.4 Monitor Cabinet Float Switch Status

Upon request from a management station, the ASC shall return the status (on or off) of each float switch in the ASC cabinet. A float switch is used to indicate if there is flooding in and around the ASC cabinet.

#### 3.5.1.3.5 Monitor ASC Temperature

Upon request from a management station, the ASC shall return the current temperature, in degrees Celsius from −127 to +127 degrees, within the ASC cabinet.

#### 3.5.1.3.6 Monitor ASC Humidity

Upon request from a management station, the ASC shall return the current humidity level, in percent from 0 to 100%, within the ASC.

#### 3.5.1.3.7 Configure ASC Temperature Threshold

Upon request from a management station, the ASC shall store the allowable temperature range, between −127 to +127 degrees Celsius, within the ASC cabinet, for which a temperature threshold alarm is reported to the management system if the temperature exceeds the upper bound, or drops below the lower bound.

#### 3.5.1.3.8 Configure ASC Humidity Thresholds

Upon request from a management station, the ASC shall store the humidity threshold, in percent from 0 to 100%, within the ASC cabinet, which, if exceeded, is used to create a humidity threshold alarm to be reported to the management system.

© 2023 AASHTO / ITE / NEMA Do Not Copy Without Written Permission

#### 3.5.1.3.9 Configure ATC Cabinet Device LEDs

Upon request from a management station, the ASC shall store the mode of the LED displays in an ATC cabinet. This requirement allows a management station to control the operation of LEDs on cabinet devices. Valid values are other, on, and off.

### 3.5.1.4 Monitor Power Requirements

A management station needs to monitor the status of the power-provision-related equipment associated with the ASC cabinet. The requirements for monitoring the power for the ASC cabinet follow.

#### 3.5.1.4.1 Determine Power Source

Upon request from a management station, the ASC shall return the current power source for the ASC cabinet. Valid values are AC power, generator, solar, battery-UPS, 48 Vdc, and 24 Vdc.

#### 3.5.1.4.2 Monitor AC Power Status

Upon request from a management station, the ASC shall return the measured AC voltage, in Volts Root Mean Squared, on the incoming AC power line, from 0 to 600 rms volts in 0.1-volt increments.

#### 3.5.1.4.3 Monitor UPS Battery Charge

Upon request from a management station, the ASC shall return an estimate of the UPS battery charge remaining as a whole percent, from 0 to 100%, of the full charge after communicating with the UPS.

#### 3.5.1.4.4 Monitor UPS Battery Voltage

Upon request from a management station, the ASC shall return the voltage of the battery from 0.1 to 100.0 VDC in increments of 0.1 Volts DC.

#### 3.5.1.4.5 Monitor UPS Battery Current

Upon request from a management station, the ASC shall return the current of the battery from 0.1 to 20.0 rms amp DC in increments of 0.1 ampere DC.

### 3.5.1.5 Manage Operational Performance Data Requirements

Operational performance data consists of frequent snapshots of signal operations data and detector data measured by the ASC and allows the management station to view the temporal relationship between signal indications and traveler arrivals. The requirements to manage the collection and retrieval of high-resolution operational data from the ASC follow.

#### 3.5.1.5.1 Configure Operational Performance Data Requirements

The requirements to manage the collection and retrieval of high-resolution operational data from the ASC follow.

##### 3.5.1.5.1.1 Enable/Disable Collection of Operational Performance Data

Upon request from a management station, the ASC shall allow enabling or disabling the collection of high-resolution performance data. NTCIP currently allows the polling of a field device at a rate of no more than once per second. This requirement addresses the need for an ASC to collect and store controller event data at a higher rate than once per second.

Do Not Copy Without Written Permission © 2023 AASHTO / ITE / NEMA

#### 3.5.1.5.1.2 Start Collection of Operational Performance Data on Specific Date/Time

Upon request from a management station, the ASC shall allow starting the collection of high-resolution performance data on a particular date and time using UTC time. The data is still collected in 1/10 millisecond intervals.

#### 3.5.1.5.1.3 End Collection of Operational Performance Data on Specific Date/Time

Upon request from a management station, the ASC shall allow ending the collection of high-resolution performance data on a particular date and time.

#### 3.5.1.5.1.4 Configure Collection of Operational Performance Data

Upon request from a management station, the ASC shall store the data (objects) the ASC is to collect, and the conditions that will trigger the collection. The allowed trigger conditions are when the value for a defined object changes, is greater than a defined value, is less than a defined value, on a periodic basis, on a hysteresis basis.

### 3.5.1.5.2 Retrieve Operational Performance Data Configuration Requirements

The requirements to manage the collection and retrieval of high-resolution operational data from the ASC follow.

#### 3.5.1.5.2.1 Determine Collection of Operational Performance Data

Upon request from a management station, the ASC shall return if the ASC is currently collecting high-resolution performance data.

#### 3.5.1.5.2.2 Determine Operational Performance Data Collection Capabilities

Upon request from a management station, the ASC shall return the capabilities of the ASC for collecting and recording high-resolution performance data.

### 3.5.1.5.3 Retrieve Operational Performance Data Requirements

The requirements to monitor and return the collected high-resolution operational data from the ASC follow.

.

#### 3.5.1.5.3.1 Monitor Operational Performance Data

Upon request from a management station, the ASC shall return the high-resolution performance data the ASC is collecting and recording. This allows a manager to view the performance data after it has been collected by the ASC.

#### 3.5.1.5.3.2 Retrieve Operational Performance Data

Upon request from a management station, the ASC shall return the high-resolution performance data log entries.

#### 3.5.1.5.3.3 Retrieve Operational Performance Data—Time Range

Upon request from a management station, the ASC shall return the high-resolution data log entries that were recorded between the indicated start date/time and end date/time.

© 2023 AASHTO / ITE / NEMA Do Not Copy Without Written Permission

#### 3.5.1.5.3.4 Retrieve Operational Performance Data—Event Code

Upon request from a management station, the ASC shall return the high-resolution data log entries that were recorded for a specific recording class.

### 3.5.1.5.4 Clear Operational Performance Data Requirements

The requirements to manage the deletion of high-resolution operational data from the ASC follow.

#### 3.5.1.5.4.1 Clear Operational Performance Data—All

Upon request from a management station, the ASC shall clear all high-resolution data log entries.

#### 3.5.1.5.4.2 Clear Operational Performance Data—Time Range

Upon request from a management station, the ASC shall clear all high-resolution data log entries before the indicated start date/time.

#### 3.5.1.5.4.3 Clear Operational Performance Data—Event Code

Upon request from a management station, the ASC shall clear all high-resolution data log entries of a particular recording configuration.

#### 3.5.1.5.4.4 Clear Operational Performance Data—Event Class

Upon request from a management station, the ASC shall clear all high-resolution data log entries of the indicated recording class.

#### 3.5.1.5.4.5 Clear Operational Performance Data—Configuration

Upon request from a management station, the ASC shall clear all configurations for collecting high-resolution data.

### 3.5.1.6 Manage ASC Clock Requirements

The requirements for managing the clock of an ASC follow.

#### 3.5.1.6.1 Configure ASC Clock Source

Upon request from the management station, the ASC shall store the primary clock source for the ASC. The valid values are line frequency, RTC square wave, crystal, GNSS, NTP, and other.

#### 3.5.1.6.2 Determine ASC Clock Status

Upon request from the management station, the ASC shall return the status of the clock in the ASC. The valid values are active, data error, data timeout error, and pending update.

#### 3.5.1.6.3 Determine Current ASC Clock Source

Upon request from the management station, the ASC shall return the current clock source in the ASC. This may be different from the primary clock source if the ASC is in a "fallback" condition.

#### 3.5.1.6.4 Determine Available ASC Clock Sources

Upon request from the management station, the ASC shall return the clock sources available to the ASC.

Do Not Copy Without Written Permission © 2023 AASHTO / ITE / NEMA

### 3.5.2 Manage Signal Operations Management Requirements

The requirements for managing the signal operations of an ASC follow.

#### 3.5.2.1 Manage Signal Configuration Requirements

The requirements to manage the traffic signal configurations are defined in the following paragraphs.

##### 3.5.2.1.1 Manage Unit Configuration Requirements

The requirements to manage the unit configurations of the ASC follow.

###### 3.5.2.1.1.1 Manage Startup Requirements

The requirements to manage the ASC startup follow.

####### 3.5.2.1.1.1.1 Configure Startup All-Red Flash Mode

Upon request from a management station, the ASC shall store that all signal indications are flashing red after restoration of a defined power interruption or activation of the external start input. By default, the startup flash state for each signal indication is also the state of a channel during Automatic Flash mode. If startup flashing all-red is enabled, all signal indications are flashing red during the startup flash time. Otherwise, the signal indications are the same as during Automatic Flash.

####### 3.5.2.1.1.1.2 Configure Startup Flash Time

Upon request from a management station, the ASC shall store the period of time, in seconds, the ASC remains in the startup flash state after the power is restored following a power interruption. During the startup flash state, the ASC de-activates the fault monitor and voltage monitor outputs. The period of time the ASC is allowed to be in the startup state is 0 to 255 seconds.

> Note: MUTCD states that "Changes from (all-red) flashing mode to steady (stop-and-go) mode shall be made by changing the flashing red indications to steady red indications followed by appropriate green indications to begin the steady mode cycle" (see FHWA MUTCD 2009 Edition, Section 4D.31 01.b) and "The steady red clearance interval provided during the change from red-red flashing mode to steady (stop-and-go) mode should have a duration of 6 seconds" (see FHWA MUTCD 2009 Edition, Section 4D.31 02).

####### 3.5.2.1.1.1.3 Enable/Disable Automatic Pedestrian Clearance Setting

Upon request from a management station, the ASC shall store one of the following settings for the automatic pedestrian clearance setting, of which only one can be active at a time: a) disable or b) enable. When enabled, the ASC times the Pedestrian Clearance interval when Manual Control Enable is active and prevents the Pedestrian Clearance interval from being terminated by the Interval Advance input.

###### 3.5.2.1.1.2 Configure Backup Time

Upon request from a management station, the ASC shall store the backup time, in seconds, as provided in the request. The backup time defines the period of time to be exceeded, when no SET operation to any of the system control parameters, is defined in NTCIP 1202 v02, Section 2.4.3 Backup Time Parameter, after which the ASC reverts to Backup Mode. The backup time is a value from 0 to 65535 seconds, with a value of 0 indicating this feature is disabled.

© 2023 AASHTO / ITE / NEMA Do Not Copy Without Written Permission

#### 3.5.2.1.1.3 Configure Backup Time—User-Defined

Upon request from a management station, the ASC shall store a backup time, in seconds, based on user-defined functions, as provided in the request. The backup time defines the period of time to be exceeded when no Deliver operations (e.g., SET) are received on any user-defined functions (see Section 3.5.2.1.1.4) after which the ASC reverts to Backup Mode. The backup time is a value from 0 to 16777216 seconds. A value of 0 indicates this feature is disabled.

#### 3.5.2.1.1.4 Configure Backup Time—User-Defined Functions

Upon request from a management station, the ASC shall store the functions, which resets the backup timer, if any Deliver operations (e.g., SET) are received on any of the defined functions.

#### 3.5.2.1.1.5 Determine Maximum Number of Functions Supported for Backup Time

Upon request from a management station, the ASC shall return the maximum number of functions that can be used to reset the user-defined backup timer in the ASC.

#### 3.5.2.1.1.6 Configure Parameters for Creation of an Alternate Device Configuration Identifier

Upon request from a management station, the ASC shall store a set of configuration parameters that are used to create the value of an alternate device configuration identifier. This requirement allows an operator to select the configuration parameters used to generate the configuration identifier (see Annex H.1.1.2.1).

### 3.5.2.1.2 Manage Phase Configuration Requirements

The requirements to manage the phase configurations of the ASC follow.

#### 3.5.2.1.2.1 Configure Phases Requirements

To manage a phase-based controller, the ASC shall allow a management system to configure each defined phase.

##### 3.5.2.1.2.1.1 Enable/Disable Phase

Upon request from a management station, the ASC shall store if a phase is enabled or disabled for the current configuration. A disabled phase does not provide any outputs nor respond to any phase inputs.

##### 3.5.2.1.2.1.2 Configure Vehicle Phase Minimum Green Time

Upon request from a management station, the ASC shall store the minimum amount of time the Green indication is to be displayed for a phase in seconds, between 0 and 255 seconds.

##### 3.5.2.1.2.1.3 Configure Vehicle Phase Passage Time

Upon request from a management station, the ASC shall store the extensible time of the Green indication for a phase in tenths of a second, between 0 and 25.5 seconds. The extensible time of the Green indication is the amount of time that the Green indication is extended after a vehicle actuation. The Green indication is extended until the passage timer is timed out.

##### 3.5.2.1.2.1.4 Configure Vehicle Phase Maximum Green Times

Upon request from a management station, the ASC shall store a default and a second value for the maximum amount of time in seconds, from 0 to 255 seconds, for which the vehicle phase shows a green time. In the absence of a serviceable conflicting call, the ASC holds the Maximum Green timer in reset

 © 2023 AASHTO / ITE / NEMA

unless Max Vehicle Recall is enabled for this phase, which may be overridden by external input, coordMaximumMode, or another method defined in NTCIP 1202 v03.

#### 3.5.2.1.2.1.5 Configure Vehicle Phase Third Maximum Green Times

Upon request from a management station, the ASC shall store a third value for the maximum amount of time in seconds, from 0 to 6000 seconds, for which the vehicle phase shows a green time. In the absence of a serviceable conflicting call, the ASC holds the Maximum Green timer in reset unless Max Vehicle Recall is enabled for this phase, which may be overridden by external input, coordMaximumMode, or another method defined in NTCIP 1202 v03.

#### 3.5.2.1.2.1.6 Configure Phase Yellow Time

Upon request from a management station, the ASC shall store the amount of time the Yellow indication is to be displayed for a phase in tenths of a second from 0 to 25.5 seconds.

#### 3.5.2.1.2.1.7 Configure Red Clearance Time

Upon request from a management station, the ASC shall store the amount of time a Red indication is to be displayed for a phase in tenths of a second, from 0 to 25.5 seconds.

#### 3.5.2.1.2.1.8 Configure Phase Red Revert Time

Upon request from a management station, the ASC shall store the minimum amount of time a Red indication is to be displayed following a yellow change interval, prior to the next Green Interval as provided in the request. The minimum red indication for this phase is in tenths of a second, from 0 to 25.5 seconds.

#### 3.5.2.1.2.1.9 Configure Unit Red Revert Time

Upon request from a management station, the ASC shall store the minimum amount of time a Red indication is to be displayed following a yellow change interval, prior to the next Green Interval as provided in the request. The minimum red indication for all phases defined in the ASC is in tenths of a second, from 0.0 to 25.5 seconds.

#### 3.5.2.1.2.1.10 Configure Added Initial Time

Upon request from a management station, the ASC shall store the amount of time for a phase, in tenths of a second, by which the ASC is to increase the variable green time period (initial time period) based on the vehicle actuations detected during the associated phase's yellow and red indications. The possible amount of added initial time is between 0 and 25.5 seconds. The value is used in conjunction with the Volume Density operation that might be used within an ASC.

#### 3.5.2.1.2.1.11 Configure Maximum Initial Time

Upon request from a management station, the ASC shall store the maximum amount of time in seconds, from 0 to 255, that the variable green time period (initial time period) of a phase can be increased, which cannot be less than the minimum green time of the phase.

#### 3.5.2.1.2.1.12 Configure Time Before Reduction

Upon request from a management station, the ASC shall store the Time Before Reduction period for a phase in seconds from 0 to 255. The Time Before Reduction (TBR) period begins when the phase is Green, and there is a serviceable conflicting call. The linear reduction of the allowable gap from the Passage Time begins when the TBR period or the Cars Before Reduction (CBR) is satisfied, whatever

© 2023 AASHTO / ITE / NEMA Do Not Copy Without Written Permission

occurs first. If the serviceable conflicting call is removed while timing the TBR period, the associated internal ASC timer is reset.

#### 3.5.2.1.2.1.13 Configure Phase Time to Reduce

Upon request from a management station, the ASC shall store the time to reduce for a phase in seconds from 0 to 255 seconds. The time to reduce is used to control the linear rate of reduction between the Passage Time and the minimum gap, as defined by NEMA TS 1 and NEMA TS 2.

#### 3.5.2.1.2.1.14 Configure Cars Before Reduction

Upon request from a management station, the ASC shall store the Cars Before Reduction parameter for a phase in number of vehicles, from 0 to 255. The Cars Before Reduction begins counting when the phase is Green, and there is a serviceable conflicting call. The linear reduction of the allowable gap from the Passage Time begins when the Cars Before Reduction (CBR) or Time Before Reduction (TBR) period is satisfied, whatever occurs first.

#### 3.5.2.1.2.1.15 Configure Phase Reduce By Time

Upon request from a management station, the ASC shall store a parameter to control the rate of reduction for a phase in tenths of a second, from 0 to 25.5 seconds. This parameter allows the use of an alternate time to reduce algorithm other than the linear reduction defined by NEMA TS 1 and NEMA TS 2. However, the time to reduce remains the same.

#### 3.5.2.1.2.1.16 Configure Phase Minimum Gap Time

Upon request from a management station, the ASC shall store the minimum amount of time in tenths of a second, from 0 to 25.5 seconds, to which the gap between vehicles can be reduced with the purpose that the phase can be terminated, if the detected gap between subsequent detector actuations is greater than this value.

#### 3.5.2.1.2.1.17 Configure Phase Dynamic Maximum Limit

Upon request from a management station, the ASC shall store the upper limit or lower limit of the maximum allowable time of the Green indication for a phase, from 0 to 255 seconds. If the Dynamic Maximum Limit is larger than the normal maximum time of the Green Indication, it becomes the upper limit. If the Dynamic Maximum Limit is lower than the normal maximum time of the Green indication, it becomes the lower limit. The ASC disables the use of this function, if the maximum recall time or a failed detector associated with the phase is active.

#### 3.5.2.1.2.1.18 Configure Phase Dynamic Maximum Step

Upon request from a management station, the ASC shall store the step value for increasing or decreasing the allowable maximum time of the Green indication in tenths of a second, from 0 to 25.5 seconds. If a phase maxes out twice in a row, the ASC increases the allowable maximum time of the Green indication by the step value until the upper limit of the dynamic maximum is reached. If the phase gaps out twice in a row, the ASC decreases the allowable maximum time of the Green indicated by the step value until the lower limit of the dynamic maximum value is reached. If the phase alternates between gapping out and maxing out, the ASC does not change the dynamic maximum value of the Green indication.

#### 3.5.2.1.2.1.19 Configure Phase Startup Requirements

The requirements to configure the startup state for a phase after restoration of a defined power interruption or activation of the external start input within the ASC follow.

Do Not Copy Without Written Permission © 2023 AASHTO / ITE / NEMA

#### 3.5.2.1.2.1.19.1 Configure Phase Startup—Initialize in a Red State

Upon request from a management station, the ASC shall store that the startup state for a phase after restoration of a defined power interruption or activation of the external start input is the red indication, meaning that the phase is not active and no intervals are timing.

#### 3.5.2.1.2.1.19.2 Configure Phase Startup—Initialize at Beginning of Min Green and Walk

Upon request from a management station, the ASC shall store that the startup state for a phase after restoration of a defined power interruption or activation of the external start input is at the beginning of the minimum green and walk timing intervals for this phase.

#### 3.5.2.1.2.1.19.3 Configure Phase Startup—Initialize at Beginning of Min Green

Upon request from a management station, the ASC shall store that the startup state for a phase after restoration of a defined power interruption or activation of the external start input is at the beginning of the minimum green interval for this phase with no walks.

#### 3.5.2.1.2.1.19.4 Configure Phase Startup—Initialize at Beginning of Yellow

Upon request from a management station, the ASC shall store that the startup state for a phase after restoration of a defined power interruption or activation of the external start input is at the beginning of the yellow change interval for this phase.

#### 3.5.2.1.2.1.19.5 Configure Phase Startup—Initialize at Beginning of Red Clearance

Upon request from a management station, the ASC shall store that the startup state for a phase after restoration of a defined power interruption or activation of the external start input is at the beginning of the red clearance interval for this phase.

#### 3.5.2.1.2.1.20 Configure Automatic Flash Entry Phase

Upon request from a management station, the ASC shall store which phases are serviced before initiating Automatic Flash when Automatic Flash is called.

#### 3.5.2.1.2.1.21 Configure Automatic Flash Exit Phase

Upon request from a management station, the ASC shall store which phases are serviced when Automatic Flash terminates.

#### 3.5.2.1.2.1.22 Configure Call to Non-Actuated 1

Upon request from a management station, the ASC shall store which phases respond if the Call to Non-Actuated 1 input is active.

#### 3.5.2.1.2.1.23 Configure Call to Non-Actuated 2

Upon request from a management station, the ASC shall store which phases respond if the Call to Non-Actuated 2 input is active.

#### 3.5.2.1.2.1.24 Configure Non-Lock Detector Memory

Upon request from a management station, the ASC shall store whether a call present at the beginning of a phase's yellow time is locked.

© 2023 AASHTO / ITE / NEMA Do Not Copy Without Written Permission

#### 3.5.2.1.2.1.25 Configure Minimum Vehicle Recall

Upon request from a management station, the ASC shall store if a recurring call for vehicle service exists for a phase when that phase is not in its Green interval.

#### 3.5.2.1.2.1.26 Configure Maximum Vehicle Recall

Upon request from a management station, the ASC shall store if a call for service is created to extend the green interval to the maximum Green time.

#### 3.5.2.1.2.1.27 Configure Soft Vehicle Recall

Upon request from a management station, the ASC shall store if a call is to be placed on a phase when all conflicting phases are in green or red dwell, and there are no serviceable conflicting calls.

#### 3.5.2.1.2.1.28 Configure Dual Phase Entry

Upon request from a management station, the ASC shall store if a phase is to become active upon entry into a concurrency group, when no calls exist in its ring within its concurrency group. This is valid for multi-ring configurations only.

#### 3.5.2.1.2.1.29 Configure Simultaneous Gap Disable

Upon request from a management station, the ASC shall store if a gapped out phase is allowed to revert to the extensible portion of the phase. This is valid for multi-ring configurations only.

#### 3.5.2.1.2.1.30 Configure Guaranteed Passage

Upon request from a management station, the ASC shall store if the phase operates in volume density mode. The volume density mode uses gap reduction to retain the right of way for the unexpired portion of the Passage time following the decision to terminate the green due to a reduced gap.

#### 3.5.2.1.2.1.31 Configure Actuated Rest-in-Walk

Upon request from a management station, the ASC shall store if an actuated phase rests in Walk if there is no serviceable conflicting call at the end of the Walk time.

#### 3.5.2.1.2.1.32 Configure Conditional Service Enable

Upon request from a management station, the ASC shall store if conditional service, as defined in NEMA TS 2 Section 3.5.3.9, is allowed. Conditional service provides an optional method for phase selection in multi-ring configurations.

#### 3.5.2.1.2.1.33 Configure Added Initial Calculation

Upon request from a management station, the ASC shall store what detector values it is to use for the calculation of the variable portion of the green time (added initial time): a) the largest count value from all associated detectors or b) the sum from all associated detectors.

#### 3.5.2.1.2.1.34 Configure Phase-to-Ring Association

Upon request from a management station, the ASC shall store the ring (number), with which the phase is associated with or if the phase is disabled.

Do Not Copy Without Written Permission © 2023 AASHTO / ITE / NEMA

#### 3.5.2.1.2.1.35 Configure Phase Concurrency

Upon request from a management station, the ASC shall store the phase numbers allowed to run concurrently with the phase. Phases within the same ring cannot run concurrently.

#### 3.5.2.1.2.1.36 Configure Yellow Change Time Before End of Ped Clearance

Upon request from a management station, the ASC shall store the amount of the yellow and red change interval, in tenths of a second, that may precede the end of the pedestrian clearance interval for a phase.

#### 3.5.2.1.2.1.37 Enable/Disable Ped-Only Phase

Upon request from a management station, the ASC shall store if a pedestrian-only phase is enabled or disabled for the current configuration. A disabled pedestrian-only phase does not provide any outputs nor respond to any phase inputs.

#### 3.5.2.1.2.1.38 Configure Pedestrian Green Time

Upon request from a management station, the ASC shall store the amount of time the pedestrian WALK indication is to be displayed for a phase in seconds, between 0 and 255 seconds. The MUTCD states that the WALK indication should be at least 4 seconds with a normal minimum duration of 7 seconds.

#### 3.5.2.1.2.1.39 Configure Pedestrian Clearance Time

Upon request from a management station, the ASC shall store the amount of time the first pedestrian clearance indication is to be displayed for a phase in seconds, between 0 and 255 seconds. The first pedestrian clearance indication is the interval following a pedestrian WALK indication and is normally a Flashing Don't Walk.

#### 3.5.2.1.2.1.40 Configure Ped Phase Walk Recycle Time

Upon request from a management station, the ASC shall store if the pedestrian Walk indication is allowed to be shown again within the same phase (after the initial pedestrian Walk, Flashing Don't Walk, and minimum Don't Walk time).

#### 3.5.2.1.2.1.41 Configure Ped Phase Don't Walk Revert Time

Upon request from a management station, the ASC shall store the minimum amount of time a pedestrian Don't Walk indication is to be displayed following a Flashing Don't Walk time, prior to the next Walk indication as provided in the request. The minimum pedestrian Don't Walk time indication for this phase is in tenths of a second, from 0 to 25.5 seconds.

#### 3.5.2.1.2.1.42 Configure Non-Lock Ped Detector Memory

Upon request from a management station, the ASC shall store if a pedestrian call present at the beginning of the phase's pedestrian clearance interval (Flashing Don't Walk) is locked.

#### 3.5.2.1.2.1.43 Configure Pedestrian Recall

Upon request from a management station, the ASC shall store if a recurring call for pedestrian service exists for a phase when that phase is not in its Walk interval. The ASC does not recycle the pedestrian service until a conflicting phase is serviced.

© 2023 AASHTO / ITE / NEMA Do Not Copy Without Written Permission

#### 3.5.2.1.2.1.44 Configure Alternate Pedestrian Clearance Time

Upon request from a management station, the ASC shall store an alternate pedestrian clearance time for a pedestrian phase, in tenths of a second from 0 to 255 seconds. This alternate time may be used to support an ADA pedestrian clearance time.

#### 3.5.2.1.2.1.45 Configure Alternate Pedestrian Walk Time

Upon request from a management station, the ASC shall store the amount of time for a pedestrian phase, in tenths of a second from 0 to 255 seconds. This alternate time may be used to support an extended Walk time period based on an ADA pedestrian detector input.

#### 3.5.2.1.2.1.46 Configure Vehicle Phase Walk Offset Time

Upon request from a management station, the ASC shall store the amount of time, in tenths of a second, that the vehicle phase's parallel pedestrian Walk indication starts offset to the start of the green indication of the vehicle phase. For example, MUTCD states that the (leading) Pre-WALK indication should start at least 3 seconds prior to the start of Green.

#### 3.5.2.1.2.1.47 Configure Advanced Green Warning—Associated Vehicle Phase

Upon request from a management station, the ASC shall store the associated vehicle phase for which the Advanced Warning Green indication is displayed.

#### 3.5.2.1.2.1.48 Configure Advanced Green Warning—Start Delay Time

Upon request from a management station, the ASC shall store the amount of time, in tenths of a second for a period of 0 to 12.8 seconds, in delay time that a warning signal indication starts. The warning signal is placed upstream of the phase's approach and indicates that the phase's Green indication starts.

#### 3.5.2.1.2.1.49 Configure Advanced Red Warning—Associated Vehicle Phase

Upon request from a management station, the ASC shall store the associated vehicle phase for which the Advanced Warning Red indication is displayed.

#### 3.5.2.1.2.1.50 Configure Red Indication Advanced Warning—Start Delay Time

Upon request from a management station, the ASC shall store the amount of time, in tenths of a second for a period of 0.0 to 25.5 seconds, that a warning signal indication starts. The warning signal is placed upstream of the phase's approach and indicates that the phase's Red indication starts.

#### 3.5.2.1.2.1.51 Configure Flashing Yellow Arrow Associated Vehicle Phase

Upon request from a management station, the ASC shall store the associated vehicle phase for which the Flashing Yellow Arrow indication is displayed.

#### 3.5.2.1.2.1.52 Configure Flashing Red Arrow Associated Vehicle Phase

Upon request from a management station, the ASC shall store the associated vehicle phase for which the Flashing Red Arrow indication is displayed.

#### 3.5.2.1.2.1.53 Configure Bicycle Phase Minimum Green Time

Upon request from a management station, the ASC shall store the minimum amount of time the Green indication is to be displayed for a Bicycle-only phase in seconds, between 0 and 255 seconds.

Do Not Copy Without Written Permission © 2023 AASHTO / ITE / NEMA

#### 3.5.2.1.2.1.54 Configure Bicycle Phase Yellow Time

Upon request from a management station, the ASC shall store the amount of time the Yellow indication is displayed for a Bicycle-only phase in tenths of a second from 0 to 25.5 seconds.

#### 3.5.2.1.2.1.55 Configure Bicycle Phase Red Clearance Time

Upon request from a management station, the ASC shall store the amount of time a Red indication is displayed for a Bicycle-only phase in tenths of a second, from 0 to 25.5 seconds.

#### 3.5.2.1.2.1.56 Configure Bicycle Phase Red Revert Time

Upon request from a management station, the ASC shall store the minimum amount of time a bicycle phase Red indication is to be displayed following a yellow change interval of the bicycle-only phase, prior to the next Green Interval as provided in the request. The minimum red indication for this bicycle-only phase is in tenths of a second, from 0 to 25.5 seconds.

#### 3.5.2.1.2.1.57 Enable/Disable Bicycle Phase

Upon request from a management station, the ASC shall store if the bicycle-only phase is enabled or disabled for the current configuration. A disabled phase does not provide any outputs nor respond to any phase inputs.

#### 3.5.2.1.2.1.58 Configure Non-Lock Bicycle Detector Memory

Upon request from a management station, the ASC shall store if a call on the bicycle-only phase is placed at the beginning of the bicycle-only phase's yellow time or making this call depends on the bicycle detector options for the detectors associated with this bicycle-only phase.

#### 3.5.2.1.2.1.59 Configure Bicycle Phase Recall

Upon request from a management station, the ASC shall store if a recurring call for the bicycle-only phase exists when that phase is not in its Green interval.

#### 3.5.2.1.2.1.60 Configure Soft Bicycle Phase Recall

Upon request from a management station, the ASC shall store if a call is to be placed on a bicycle-only phase when all conflicting phases are in green or red dwell, and there are no serviceable conflicting calls.

#### 3.5.2.1.2.1.61 Configure Bicycle Phase-to-Ring Association

Upon request from a management station, the ASC shall store the ring (number), with which the bicycle-only phase is associated or if the bicycle-only phase is disabled.

#### 3.5.2.1.2.1.62 Configure Bicycle Phase Concurrency

Upon request from a management station, the ASC shall store the phase numbers allowed to run concurrently with the bicycle-only phase. Phases within the same ring cannot run concurrently.

#### 3.5.2.1.2.1.63 Configure Transit Phase Minimum Green Time

Upon request from a management station, the ASC shall store the minimum amount of time the Green indication is to be displayed for a transit-only phase in seconds, between 0 and 255 seconds.

© 2023 AASHTO / ITE / NEMA Do Not Copy Without Written Permission

#### 3.5.2.1.2.1.64 Configure Transit Phase Maximum Green Time

Upon request from a management station, the ASC shall store the maximum amount of time in seconds, from 0 to 255 seconds, for which the transit-only phase shows a green time. The transit-only phase is held until the maximum green time has been reached, when a transit-specific check-out detector input has been received, or until a conflicting serviceable call for a higher priority phase such as an emergency vehicle call or a higher priority transit vehicle call has been received.

#### 3.5.2.1.2.1.65 Configure Transit Phase Third Maximum Green Time

Upon request from a management station, the ASC shall store a third value for the maximum amount of time in seconds, from 0 to 6000 seconds, for which the transit phase shows a green time. The transit-only phase is held until the maximum green time has been reached, when a transit-specific check-out detector input has been received, or until a conflicting serviceable call for a higher priority phase such as an emergency vehicle call or a higher priority transit vehicle call has been received.

#### 3.5.2.1.2.1.66 Configure Transit Phase Yellow Time

Upon request from a management station, the ASC shall store the amount of time the Yellow indication is displayed for a transit-only phase in tenths of a second, from 0 to 25.5 seconds.

#### 3.5.2.1.2.1.67 Configure Transit Phase Red Clearance Time

Upon request from a management station, the ASC shall store the amount of time a Red indication is displayed for a transit-only phase in tenths of a second, from 0 to 25.5 seconds.

#### 3.5.2.1.2.1.68 Configure Transit Phase Red Revert Time

Upon request from a management station, the ASC shall store the minimum amount of time a Red indication for a transit-only phase is to be displayed following a yellow change interval, prior to the next Green Interval as provided in the request. The minimum red indication for this phase is in tenths of a second, from 0 to 25.5 seconds.

#### 3.5.2.1.2.1.69 Configure Transit Phase Added Initial Time

Upon request from a management station, the ASC shall store the amount of time for a transit-only phase, in tenths of a second, by which the ASC is to increase the variable green time period (initial time period) based on a transit service call detected during the associated transit-only phase's yellow and red indications. The possible amount of added initial time is between 0 and 25.5 seconds.

#### 3.5.2.1.2.1.70 Configure Transit Phase Maximum Initial Time

Upon request from a management station, the ASC shall store the maximum amount of time in seconds, from 0 to 255, that the variable green time period (initial time period) of a transit-only phase can be increased, which cannot be less than the minimum green time of the transit-only phase.

#### 3.5.2.1.2.1.71 Enable/Disable Transit Phase

Upon request from a management station, the ASC shall store if the transit-only phase is enabled or disabled for the current configuration. A disabled phase does not provide any outputs nor respond to any phase inputs.

Do Not Copy Without Written Permission © 2023 AASHTO / ITE / NEMA

#### 3.5.2.1.2.1.72 Configure Non-Lock Transit Detector Memory

Upon request from a management station, the ASC shall store if a call on the transit-only phase is placed at the beginning of the transit-only phase's yellow time or making this call depends on the transit detector options for the detectors associated with this transit-only phase.

#### 3.5.2.1.2.1.73 Configure Transit Phase Recall

Upon request from a management station, the ASC shall store if a recurring call for the transit-only phase exists when that phase is not in its Green interval.

#### 3.5.2.1.2.1.74 Configure Soft Transit Phase Recall

Upon request from a management station, the ASC shall store if a call is to be placed on a transit-only phase when all conflicting phases are in green or red dwell, and there are no serviceable conflicting calls.

#### 3.5.2.1.2.1.75 Configure Dual Transit Phase Entry

Upon request from a management station, the ASC shall store if a transit-only phase is to become active upon entry into a concurrency group, when no calls exist in its ring within its concurrency group. This is valid for multi-ring configurations only.

#### 3.5.2.1.2.1.76 Configure Transit Phase-to-Ring Association

Upon request from a management station, the ASC shall store the ring (number), with which the transit-only phase is associated or if the transit-only phase is disabled.

#### 3.5.2.1.2.1.77 Configure Transit Phase Concurrency

Upon request from a management station, the ASC shall store the phase numbers allowed to run concurrently with the transit-only phase. Phases within the same ring cannot run concurrently.

#### 3.5.2.1.2.1.78 Enable/Disable Vehicle Phase Omit

Upon request from a management station, the ASC shall store if the omitting of the vehicle phase is enabled or disabled for the current configuration. A vehicle phase that is enabled to be omitted might be skipped, if no demand is detected or if the ASC is to perform a particular operation.

#### 3.5.2.1.2.1.79 Enable/Disable Vehicle Phase Omit During Transition

Upon request from a management station, the ASC shall store if the omitting of the vehicle phase during the transition from one timing plan to another is enabled or disabled for the current configuration. A vehicle phase that is enabled to be omitted during transition might be skipped during transition to shorten the time required to reach the transition point.

#### 3.5.2.1.2.1.80 Enable/Disable Ped-Only Phase Omit

Upon request from a management station, the ASC shall store if the omitting of the ped-only phase is enabled or disabled for the current configuration. A ped-only phase that is enabled to be omitted might be skipped, if no demand is detected or if the ASC is to perform a particular operation.

#### 3.5.2.1.2.1.81 Enable/Disable Ped-Only Phase Omit During Transition

Upon request from a management station, the ASC shall store if the omitting of the ped-only phase during the transition from one timing plan to another is enabled or disabled for the current configuration. A ped-

© 2023 AASHTO / ITE / NEMA Do Not Copy Without Written Permission

only phase that is enabled to be omitted during transition might be skipped during transition to shorten the time required to reach the transition point.

#### 3.5.2.1.2.1.82 Enable/Disable Bicycle-Only Phase Omit

Upon request from a management station, the ASC shall store if the omitting of the bicycle-only phase is enabled or disabled for the current configuration. A bicycle-only phase that is enabled to be omitted might be skipped, if no demand is detected or if the ASC is to perform a particular operation.

#### 3.5.2.1.2.1.83 Enable/Disable Bicycle-Only Phase Omit During Transition

Upon request from a management station, the ASC shall store if the omitting of the bicycle-only phase during the transition from one timing plan to another is enabled or disabled for the current configuration. A bicycle-only phase that is enabled to be omitted during transition might be skipped during transition to shorten the time required to reach the transition point.

#### 3.5.2.1.2.1.84 Enable/Disable Transit Phase Omit

Upon request from a management station, the ASC shall store if the omitting of the transit phase is enabled or disabled for the current configuration. A transit phase that is enabled to be omitted might be skipped, if no demand is detected or if the ASC is to perform a particular operation.

#### 3.5.2.1.2.1.85 Enable/Disable Transit Phase Omit During Transition

Upon request from a management station, the ASC shall store if the omitting of the transit phase during the transition from one timing plan to another is enabled or disabled for the current configuration. A transit phase that is enabled to be omitted during transition might be skipped during transition to shorten the time required to reach the transition point.

#### 3.5.2.1.2.1.86 Configure Alternate Minimum Vehicle Green Time During Transition

Upon request from a management station, the ASC shall store the alternate minimum green time, in seconds from 1 to 255 seconds, that is to be used if the correction mode has been set to the 'Alternate Minimums' mode. The alternate minimum green cannot be less than minimum green for this phase.

#### 3.5.2.1.2.1.87 Configure Alternate Minimum Pedestrian Walk Time During Transition

Upon request from a management station, the ASC shall store the alternate minimum Walk time, in seconds from 1 to 255 seconds, that is to be used for this pedestrian-only phase, if the correction mode has been set to the 'Alternate Minimums' mode. The alternate minimum Walk cannot be less than minimum Walk for this phase.

#### 3.5.2.1.2.1.88 Configure Alternate Minimum Bicycle Green Time During Transition

Upon request from a management station, the ASC shall store the alternate minimum green time, in seconds from 1 to 255 seconds, that is to be used for this Bicycle-only phase, if the correction mode has been set to the 'Alternate Minimums' mode. The alternate minimum green cannot be less than minimum green for this phase.

#### 3.5.2.1.2.1.89 Configure Alternate Minimum Transit Green Time During Transition

Upon request from a management station, the ASC shall store the alternate minimum green time, in seconds from 1 to 255 seconds, that is to be used for this transit-only phase, if the correction mode has been set to the 'Alternate Minimums' mode. The alternate minimum green cannot be less than minimum green for this phase.

Do Not Copy Without Written Permission © 2023 AASHTO / ITE / NEMA

#### 3.5.2.1.2.1.90 Configure Phase Force Mode for Coordination Requirements

The requirements to configure the force mode for coordination for phase-based ASC, of which only one value can be active at a time, follow.

> Note: The user is able to set this Force Mode for Coordination on the unit level as well as for each phase separately. The setting of this phase-level requirement overrides the unit-level requirement for the force mode for coordination. Otherwise, the setting of the unit-level requirement serves as the default.

##### 3.5.2.1.2.1.90.1 Configure Phase-Level Force Mode for Coordination—Floating

Upon request from a management station, the ASC shall store the Floating Pattern Force Mode for each phase, where the coordination process forces each non-coordinated phase to limit its time to the split time value, allowing unused split times to revert to the coordinated phase.

##### 3.5.2.1.2.1.90.2 Configure Phase-Level Force Mode for Coordination—Fixed

Upon request from a management station, the ASC shall store the Fixed Pattern Force Mode for each phase, where the coordination process forces each non-coordinated phase off at a fixed position in the cycle, allowing unused split time to revert to the next phase.

#### 3.5.2.1.2.2 Retrieve Phase Configuration Requirements

The requirements to return the configuration parameters associated with each defined phase follow.

##### 3.5.2.1.2.2.1 Determine Maximum Number of Phases

Upon request from a management station, the ASC shall return the maximum number of phases that can be configured within the ASC.

### 3.5.2.1.3 Manage Coordination Configuration Requirements

The requirements to configure the traffic signal coordination parameters of the ASC follow.

#### 3.5.2.1.3.1 Configure Operational Mode for Coordination Requirements

The requirements to configure the operational mode for coordination of the ASC, of which only one value can be active at a time, follow.

##### 3.5.2.1.3.1.1 Configure Operational Mode for Coordination—Automatic

Upon request from a management station, the ASC shall store the 'automatic' operational mode for coordination, which provides for coordinated operation, free and flash to be determined automatically by the possible sources (i.e., system command, timebase schedule, or interconnect inputs).

##### 3.5.2.1.3.1.2 Configure Operational Mode for Coordination—Manual Pattern

Upon request from a management station, the ASC shall store the number of a 'manual pattern,' from 1 to 253 as the operational mode for coordination, which provides for coordinated operation running a (timing) pattern.

##### 3.5.2.1.3.1.3 Configure Operational Mode for Coordination—Manual Free

Upon request from a management station, the ASC shall store the 'manual free' operational mode for coordination, which provides for Free operation without coordination or Automatic Flash from any source.

© 2023 AASHTO / ITE / NEMA Do Not Copy Without Written Permission

#### 3.5.2.1.3.1.4 Configure Operational Mode for Coordination—Manual Flash

Upon request from a management station, the ASC shall store the 'manual flash' operational mode for coordination, which provides for Automatic Flash without coordination or Free from any source.

### 3.5.2.1.3.2 Configure Correction Mode for Coordination Requirements

The requirements to configure the correction mode for coordination of the ASC, of which only one value can be active at a time, follow.

#### 3.5.2.1.3.2.1 Configure Correction Mode for Coordination—Dwell

Upon request from a management station, the ASC shall store the 'Dwell' coordination correction mode, which changes offsets for the coordination algorithm by dwelling in the coordinated phase until the new offset is reached.

#### 3.5.2.1.3.2.2 Configure Correction Mode for Coordination—Shortway

Upon request from a management station, the ASC shall store the 'Shortway' coordination correction mode, which changes offsets by adding to or subtracting from the timing, using a vendor-specific method, in a manner that limits cycle change.

#### 3.5.2.1.3.2.3 Configure Correction Mode for Coordination—AddOnly

Upon request from a management station, the ASC shall store the 'AddOnly' coordination correction mode, which changes offsets by adding to the timing, using a vendor-specific method, in a manner that limits cycle change.

#### 3.5.2.1.3.2.4 Configure Correction Mode for Coordination—SubtractOnly

Upon request from a management station, the ASC shall store the 'SubtractOnly' coordination correction mode, which changes offsets by subtracting from the timing, using a vendor-specific method, in a manner that limits cycle change.

### 3.5.2.1.3.3 Configure Maximum Mode for Coordination Requirements

The requirements to configure the maximum mode for coordination of the ASC, of which only one value can be active at a time, follow.

#### 3.5.2.1.3.3.1 Configure Correction Mode for Coordination—Maximum 1

Upon request from a management station, the ASC shall store the Coordination Maximum 1 Mode of the device, in which the coordination process uses internal Maximum 1 Timing while coordination is running a pattern.

#### 3.5.2.1.3.3.2 Configure Correction Mode for Coordination—Maximum 2

Upon request from a management station, the ASC shall store the Coordination Maximum 2 Mode of the device, in which the coordination process uses internal Maximum 2 Timing while coordination is running a pattern.

Do Not Copy Without Written Permission © 2023 AASHTO / ITE / NEMA

#### 3.5.2.1.3.3.3 Configure Correction Mode for Coordination—Maximum Inhibit

Upon request from a management station, the ASC shall store the Coordination Maximum Inhibit Mode of the device, in which the coordination process does not use / inhibit any of the maximum timing settings while coordination is running a pattern.

#### 3.5.2.1.3.3.4 Configure Correction Mode for Coordination—Maximum 3

Upon request from a management station, the ASC shall store the Coordination Maximum 3 Mode of the device, in which the coordination process uses internal Maximum 3 Timing while coordination is running a pattern.

### 3.5.2.1.3.4 Configure Unit-Level Force Mode for Coordination Requirements

The requirements to configure the force mode for coordination of the ASC, of which only one value can be active at a time, follow.

> Note: The user SETs this Force Mode for Coordination on the unit level as well as for each phase separately. This setting of this unit-level is overridden, if the force mode for coordination is defined on a per-phase basis. Otherwise, this setting is the default.

#### 3.5.2.1.3.4.1 Configure Unit-Level Force Mode for Coordination—Floating

Upon request from a management station, the ASC shall store the Floating Pattern Force Mode for the device, where the coordination process forces each non-coordinated phase to limit its time to the split time value, allowing unused split times to revert to the coordinated phase.

#### 3.5.2.1.3.4.2 Configure Unit-Level Force Mode for Coordination—Fixed

Upon request from a management station, the ASC shall store the Fixed Pattern Force Mode for the device, where the coordination process forces each non-coordinated phase off at a fixed position in the cycle, allowing unused split time to revert to the next phase.

### 3.5.2.1.3.5 Configure Unit Coordination Point Requirements

The requirements to configure the default coordination point for an ASC unit follow.

> Note: The user SETs this coordination point on the unit level as well as for each signal pattern separately. This setting of this unit-level is overridden, if the coordination point is defined on a per-pattern basis. Otherwise, this setting is the default.

#### 3.5.2.1.3.5.1 Configure Unit Coordination Point—First Phase Green Begin

Upon request from a management station, the ASC shall store the beginning of the Green indication of first coordinated phase as the default coordination point.

#### 3.5.2.1.3.5.2 Configure Unit Coordination Point—Last Phase Green Begin

Upon request from a management station, the ASC shall store the beginning of the Green indication of last coordinated phase as the default coordination point.

#### 3.5.2.1.3.5.3 Configure Unit Coordination Point—First Phase Green End

Upon request from a management station, the ASC shall store the end of the Green indication of first coordinated phase as the default coordination point.

© 2023 AASHTO / ITE / NEMA Do Not Copy Without Written Permission

#### 3.5.2.1.3.5.4 Configure Unit Coordination Point—Last Phase Green End

Upon request from a management station, the ASC shall store the end of the Green indication of last coordinated phase as the default coordination point.

#### 3.5.2.1.3.5.5 Configure Unit Coordination Point—First Phase Yellow End

Upon request from a management station, the ASC shall store the end of the Yellow indication of first coordinated phase as the default coordination point.

#### 3.5.2.1.3.5.6 Configure Unit Coordination Point—Last Phase Yellow End

Upon request from a management station, the ASC shall store the end of the Yellow indication of last coordinated phase as the default coordination point.

### 3.5.2.1.3.6 Configure Coordination Point Requirements

The requirements to configure the coordination point for a timing pattern in the ASC follow.

#### 3.5.2.1.3.6.1 Configure Coordination Point—First Phase Green Begin

Upon request from a management station, the ASC shall store the beginning of the Green indication of first coordinated phase as the coordination point for a timing pattern.

#### 3.5.2.1.3.6.2 Configure Coordination Point—Last Phase Green Begin

Upon request from a management station, the ASC shall store the beginning of the Green indication of last coordinated phase as the coordination point for a timing pattern.

#### 3.5.2.1.3.6.3 Configure Coordination Point—First Phase Green End

Upon request from a management station, the ASC shall store the end of the Green indication of first coordinated phase as the coordination point for a timing pattern.

#### 3.5.2.1.3.6.4 Configure Coordination Point—Last Phase Green End

Upon request from a management station, the ASC shall store the end of the Green indication of last coordinated phase as the coordination point for a timing pattern.

#### 3.5.2.1.3.6.5 Configure Coordination Point—First Phase Yellow End

Upon request from a management station, the ASC shall store the end of the Yellow indication of first coordinated phase as the coordination point for a timing pattern.

#### 3.5.2.1.3.6.6 Configure Coordination Point—Last Phase Yellow End

Upon request from a management station, the ASC shall store the end of the Yellow indication of last coordinated phase as the coordination point for a timing pattern.

#### 3.5.2.1.3.6.7 Configure Coordination Point—Unit Coordination Point

Upon request from a management station, the ASC shall store the Unit Coordination Point (see 3.5.2.1.3.5) as the coordination point for a timing pattern.

Do Not Copy Without Written Permission © 2023 AASHTO / ITE / NEMA

#### 3.5.2.1.3.7 Configure Omit Phases During Transitions

Upon request from a management station, the ASC shall store the identifiers of phase numbers that can be omitted during transitions from one pattern to another.

#### 3.5.2.1.3.8 Configure Minimum Green Times During Transitions

Upon request from a management station, the ASC shall store the minimum amount of time the Green indication is to be displayed, in seconds between 0 and 255 seconds, during the coordination correction mode. If the value is 0 seconds, the minimum duration for the Green indication for the phase is used.

#### 3.5.2.1.3.9 Configure Minimum Pedestrian Times During Transitions

Upon request from a management station, the ASC shall store the minimum amount of time the pedestrian WALK indication is to be displayed, in seconds between 0 and 255 seconds, during the coordination correction mode. If the value is 0 seconds, the minimum duration for the WALK indication for the phase is used.

#### 3.5.2.1.3.10 Configure Transit Maximum Mode for Coordination Requirements

The requirements to configure the transit maximum mode for coordination of the ASC, of which only one value can be active at a time, follow.

##### 3.5.2.1.3.10.1 Configure Transit Correction Mode for Coordination—Maximum 1

Upon request from a management station, the ASC shall store that the maximum transit green for coordination is defined by the Maximum1 value, in which the coordination process uses internal Maximum1 timing while coordination is running a pattern.

##### 3.5.2.1.3.10.2 Configure Transit Correction Mode for Coordination—Maximum 2

Upon request from a management station, the ASC shall store that the maximum transit green for coordination is defined by the Maximum2 value, in which the coordination process uses internal Maximum2 timing while coordination is running a pattern.

##### 3.5.2.1.3.10.3 Configure Transit Correction Mode for Coordination—MaxInhibit

Upon request from a management station, the ASC shall store that the maximum transit green for coordination is inhibited while coordination is running a pattern.

##### 3.5.2.1.3.10.4 Configure Transit Correction Mode for Coordination—Maximum 3

Upon request from a management station, the ASC shall store that the maximum transit green for coordination is defined by the Maximum3 value, in which the coordination process uses internal Maximum3 timing while coordination is running a pattern.

### 3.5.2.1.4 Manage Phase-Based Timing Patterns Requirements

The requirements to manage the traffic signal timing pattern parameters of the ASC follow.

#### 3.5.2.1.4.1 Configure Phase-Based Timing Patterns Requirements

The requirements to configure the traffic signal timing patterns stored within an ASC follow.

© 2023 AASHTO / ITE / NEMA Do Not Copy Without Written Permission

#### 3.5.2.1.4.1.1 Configure Pattern Cycle Time

Upon request from a management station, the ASC shall store the length of the pattern cycle in seconds, from 30 to 254 seconds.

If the pattern cycle time is of insufficient length to service the minimum timing parameters (Minimum Green, Walk, Pedestrian Clearance, Yellow Clearance, Minimum Red, etc.) of all phases, the ASC automatically implements Free Mode and indicates this in the ASC's alarm status. If the pattern cycle time is configured to be zero, the ASC implements the split time values for each phase's maximum green time values, assuming that the associated split table contains values greater than zero. If the pattern cycle time is configured to be 255, the ASC extends the duration for the pattern cycle time based on the value set in the Pattern Cycle Time—Extended Duration.

#### 3.5.2.1.4.1.2 Configure Pattern Offset Time

Upon request from a management station, the ASC shall store the time in seconds, from 0 to 254 seconds, that the local time zero lags the system time zero for this pattern.

If the Offset value is greater than the Pattern Cycle Time value, the ASC implements Free Mode, and indicates this in the ASC's alarm status. If the pattern offset time is configured to be 255, the ASC extends the offset time based on the value set in the Pattern Offset Time—Extended Duration.

#### 3.5.2.1.4.1.3 Configure Pattern Split Association

Upon request from a management station, the ASC shall store the split associated with a traffic signal timing pattern.

#### 3.5.2.1.4.1.4 Configure Pattern Sequence Association

Upon request from a management station, the ASC shall store the sequence associated with a traffic signal timing plan.

#### 3.5.2.1.4.1.5 Configure Pattern Maximum Mode

Upon request from a management station, the ASC shall store the maximum mode for a pattern. The valid maximum modes are:

a) coordMaximumMode. Use the default maximum mode defined by the ASC.
b) Maximum Inhibit. The maximum timing is inhibited while coordination is running this pattern.
c) Maximum 1. The Maximum 1 timing is used while coordination is running this pattern.
d) Maximum 2. The Maximum 2 timing is used while coordination is running this pattern.
e) Maximum 3. The Maximum 3 timing is used while coordination is running this pattern.

### 3.5.2.1.4.2 Retrieve Phase-Based Timing Patterns Requirements

The requirements to retrieve the traffic signal timing plans / patterns stored within a phase-based ASC follow.

#### 3.5.2.1.4.2.1 Determine Maximum Number of Phase-Based Timing Pattern

Upon request from a management station, the ASC shall return the maximum number of traffic signal plans / patterns that can be configured in the ASC.

Do Not Copy Without Written Permission © 2023 AASHTO / ITE / NEMA

#### 3.5.2.1.4.2.2 Determine Phase-Based Timing Pattern Type

Upon request from a management station, the ASC shall return the organizational structure for the pattern table in the ASC. NTCIP 1202 v03 supports three organizational types of pattern tables, defined by the number of offsets supported for each timing plan. The valid types of pattern tables are:

a) Patterns—Stored timing patterns are unique and are not dependent on other timing patterns.
b) Offset3—A timing plan is stored as three separate timing patterns but with (three) different offsets.
c) Offset5—A timing plan is stored as five separate timing patterns but with (five) different offsets.

### 3.5.2.1.5 Manage Splits Configuration Requirements

The requirements to manage the phase splits within traffic signal timing plans / patterns parameters of the ASC follow.

#### 3.5.2.1.5.1 Configure Split Requirements

The requirements to configure the phase splits to be used within the traffic signal timing plans / patterns stored within the ASC follow.

##### 3.5.2.1.5.1.1 Configure Phase Split Time

Upon request from a management station, the ASC shall store the time, in seconds from 0 to 255 seconds, that the split phase is allowed to receive, before the phase is terminated / forced off, when constant demand exists on all phases. The split time includes all phase clearance times for the associated phase.

The ASC operates differently depending on the configuration of other parameters as follows:

a) If the ASC is operating in floating coordination force mode, the split time parameter is equal to the maximum amount a time a non-coordinated parameter may receive.
b) If the ASC is operating in fixed coordination force mode, the allowed time may be longer, if a previous phase gapped out.
c) If the cycle time for a pattern is zero (i.e., the ASC is in Manual Free Mode), then the split time is used as a maximum time for the phase, as long as the split time is not zero.
d) If the sum of split times for all phases of a pattern is less than the cycle time, the ASC allocates any extra time to the coordinated phase. If the sum of split times for all phases of a pattern is greater than the defined cycle time for a pattern, then the ASC places itself into the Manual Free mode.
e) If the ASC operates in the Manual Free mode, the local override bit of the Short Alarm is enabled.

##### 3.5.2.1.5.1.2 Configure Phase Split Mode Requirements

The requirements to configure the phase split mode within the ASC follow.

###### 3.5.2.1.5.1.2.1 Configure Phase Split Mode—None

Upon request from a management station, the ASC shall store that the operational phase split mode of a phase is not operated under split mode control.

###### 3.5.2.1.5.1.2.2 Configure Phase Split Mode—Minimum Vehicle Recall

Upon request from a management station, the ASC shall store that the operational phase split mode of a phase is operated using the minimum vehicle recall setting, where demand is placed for the phase during all other phases.

© 2023 AASHTO / ITE / NEMA Do Not Copy Without Written Permission

#### 3.5.2.1.5.1.2.3 Configure Phase Split Mode—Maximum Vehicle Recall

Upon request from a management station, the ASC shall store that the operational phase split mode of a phase is operated using the maximum vehicle recall setting, where a constant demand is placed for the phase during all phases.

#### 3.5.2.1.5.1.2.4 Configure Phase Split Mode—Pedestrian Recall

Upon request from a management station, the ASC shall store that the operational phase split mode of a phase is operated with a pedestrian recall, or a constant demand for pedestrian service during all other phases.

#### 3.5.2.1.5.1.2.5 Configure Phase Split Mode—Maximum Vehicle and Pedestrian Recall

Upon request from a management station, the ASC shall store that the operational phase split mode of a phase is operated using the larger of maximum vehicle recall setting and of the pedestrian recall setting.

#### 3.5.2.1.5.1.2.6 Configure Phase Split Mode—Phase Omit

Upon request from a management station, the ASC shall store that the operational phase split mode of a phase is operated with this phase omitted.

#### 3.5.2.1.5.1.2.7 Configure Phase Split Mode—Bicycle Recall

Upon request from a management station, the ASC shall store that the operational phase split mode of a phase is operated using the bicycle recall setting, where a constant demand for bicycle service during all other phases.

#### 3.5.2.1.5.1.2.8 Configure Phase Split Mode—Transit Recall

Upon request from a management station, the ASC shall store that the operational phase split mode of a phase is operated using the transit recall setting, where a constant demand is placed for the transit-only phase during all other phases.

#### 3.5.2.1.5.1.2.9 Configure Phase Split Mode—Non-Actuated

Upon request from a management station, the ASC shall store that the operational phase split mode of a phase is operated using a fixed split time for this phase.

#### 3.5.2.1.5.1.3 Configure Split Coordination Phase

Upon request from a management station, the ASC shall store if a given phase is designated as the coordinated phase.

#### 3.5.2.1.5.1.4 Configure Pre-Timed Split

Upon request from a management station, the ASC shall allow a management station to configure a pre-timed split in units of seconds. Valid values are 0 to 255 seconds, in 1-second increments.

### 3.5.2.1.5.2 Retrieve Split Requirements

The requirements to retrieve the phase splits to be used within the traffic signal timing plans / patterns stored within the ASC follow.

 © 2023 AASHTO / ITE / NEMA

#### 3.5.2.1.5.2.1 Determine Maximum Number of Phase Splits

Upon request from a management station, the ASC shall return the maximum number of phase splits, as a number from 1 to 255 splits that can be configured in the ASC.

### 3.5.2.1.6 Manage Ring Configuration Requirements

The requirements to manage the traffic signal timing rings of the ASC follow.

#### 3.5.2.1.6.1 Configure Ring Requirements

The requirements to configure the traffic signal timing rings stored within the ASC follow.

#### 3.5.2.1.6.1.1 Configure Sequence Data

Upon request from a management station, the ASC shall store the sequential listing of valid phases to be included in a sequence plan.

#### 3.5.2.1.6.2 Retrieve Rings Requirements

The requirements to retrieve the rings stored within the ASC follow.

#### 3.5.2.1.6.2.1 Determine Maximum Number of Rings

Upon request from a management station, the ASC shall return the maximum number of rings, as a number from 1 to 255 rings that can be configured in the ASC.

#### 3.5.2.1.6.2.2 Determine Maximum Number of Sequences

Upon request from a management station, the ASC shall return the maximum number of sequences, as a number from 1 to 255 sequences that can be configured in the ASC.

### 3.5.2.1.7 Manage Channel Configuration Requirements

The requirements to manage the channels of the ASC follow.

#### 3.5.2.1.7.1 Configure Channel Requirements

The requirements to configure the channels within the ASC follow.

#### 3.5.2.1.7.1.1 Configure Channel Control Source

Upon request from a management station, the ASC shall store the phase or overlap that controls each channel.

#### 3.5.2.1.7.1.2 Configure Channel Control Type Requirements

The requirements to configure the control type for a channel within the ASC follow.

#### 3.5.2.1.7.1.2.1 Configure Channel Control Type—Vehicle Phase

Upon request from a management station, the ASC shall store if the channel controls vehicle phase display.

© 2023 AASHTO / ITE / NEMA Do Not Copy Without Written Permission

#### 3.5.2.1.7.1.2.2 Configure Channel Control Type—Vehicle Overlap Phase

Upon request from a management station, the ASC shall store if the channel controls a vehicle overlap display.

#### 3.5.2.1.7.1.2.3 Configure Channel Control Type—Pedestrian Phase

Upon request from a management station, the ASC shall store if the channel controls a pedestrian phase display.

#### 3.5.2.1.7.1.2.4 Configure Channel Control Type—Pedestrian Overlap Phase

Upon request from a management station, the ASC shall store if the channel controls a pedestrian overlap display.

#### 3.5.2.1.7.1.2.5 Configure Channel Control Type—Bicycle Phase

Upon request from a management station, the ASC shall store if the channel controls a bicycle phase display.

#### 3.5.2.1.7.1.2.6 Configure Channel Control Type—Bicycle Overlap Phase

Upon request from a management station, the ASC shall store if the channel controls a bicycle overlap display.

#### 3.5.2.1.7.1.2.7 Configure Channel Control Type—Transit Phase

Upon request from a management station, the ASC shall store if the channel controls a transit phase display.

#### 3.5.2.1.7.1.2.8 Configure Channel Control Type—Transit Overlap Phase

Upon request from a management station, the ASC shall store if the channel controls a transit overlap display.

#### 3.5.2.1.7.1.2.9 Configure Channel Control Type—Queue Jump Phase

Upon request from a management station, the ASC shall store if the channel controls a queue jump phase display.

### 3.5.2.1.7.1.3 Configure Channel Flash Enable/Disable Requirements

The requirements to enable or disable the state of a channel during the Automatic Flash mode within the ASC follow.

#### 3.5.2.1.7.1.3.1 Enable/Disable Channel Flash—Yellow

Upon request from a management station, the ASC shall store if the Yellow indicator is flashing during Automatic Flash.

#### 3.5.2.1.7.1.3.2 Enable/Disable Channel Flash—Red

Upon request from a management station, the ASC shall store if the Red indicator is flashing during Automatic Flash.

 © 2023 AASHTO / ITE / NEMA

#### 3.5.2.1.7.1.3.3 Enable/Disable Channel Flash—Alternate Half Hertz

Upon request from a management station, the ASC shall store if the flash alternate Half Hertz is on.

#### 3.5.2.1.7.1.4 Configure Channel Dim Enable/Disable Requirements

The requirements to enable or disable the state of a channel during the Dimming mode within the ASC follow.

#### 3.5.2.1.7.1.4.1 Enable/Disable Channel Dim—Green

Upon request from a management station, the ASC shall store if the Green dimming is on during the Dimming mode.

#### 3.5.2.1.7.1.4.2 Enable/Disable Channel Dim—Yellow

Upon request from a management station, the ASC shall store if the Yellow dimming is on during the Dimming mode.

#### 3.5.2.1.7.1.4.3 Enable/Disable Channel Dim—Red

Upon request from a management station, the ASC shall store if the Red dimming is on during the Dimming mode.

#### 3.5.2.1.7.1.4.4 Enable/Disable Channel Dim—Alternate Half Hertz

Upon request from a management station, the ASC shall store if Alternate Half Line Cycle dimming is on during the Dimming mode.

### 3.5.2.1.7.2 Retrieve Channel Requirements

The requirements to retrieve the channel definitions within the ASC follow.

#### 3.5.2.1.7.2.1 Determine Maximum Number of Channels

Upon request from a management station, the ASC shall return the maximum number of channels, as a number from 1 to 255 channels are configured in the ASC.

> Note: See the appropriate hardware reference such as NEMA TS 2, Caltrans TEES, or other to determine the hardware's maximum number of channels.

### 3.5.2.1.8 Manage Overlap Configuration Requirements

The requirements to manage overlaps within the ASC follow.

### 3.5.2.1.8.1 Configure Overlap Requirements

The requirements to configure the overlaps within the ASC follow.

#### 3.5.2.1.8.1.1 Configure Overlap Type Requirements

The requirements to configure the overlap types used within the ASC follow.

#### 3.5.2.1.8.1.1.1 Configure Overlap Type—Vehicle Normal

Upon request from a management station, the ASC shall store that the Overlap control type is 'Normal.'

© 2023 AASHTO / ITE / NEMA Do Not Copy Without Written Permission

a) The ASC sets the overlap output to be Green, when an included overlap phase is green, and when an included overlap phase is yellow (or in the Red Clearance interval), and simultaneously another included overlap phase is next in the sequence.
b) The overlap is yellow when an included overlap phase is yellow and simultaneously another included overlap phase is not next in the associated phase sequence.
c) Otherwise, the overlap output is red.

#### 3.5.2.1.8.1.1.2 Configure Overlap Type—Vehicle Minus Green and Yellow

Upon request from a management station, the ASC shall store that the Overlap control type is 'Vehicle Minus Green and Yellow.'

a) The overlap output is green if an included overlap phase is green and an overlap modifier phase is not green, or if an included overlap phase is yellow (or in the Red Clearance interval) and simultaneously another included overlap phase is next and while an overlap modifier phase is not green.
b) The overlap is yellow when an included overlap phase is yellow, and an overlap modifier phase is not yellow, and another included overlap phase is not next in the associated phase sequence.
c) Otherwise, the overlap output is red.

#### 3.5.2.1.8.1.1.3 Configure Overlap Type—Pedestrian Normal

Upon request from a management station, the ASC shall store that the Overlap control type is 'Pedestrian Normal'.

a) The overlap output is Walk when an included overlap phase is green, and when an included overlap phase is yellow (or in the Red Clearance interval) and simultaneously another included overlap phase is next in the sequence. Upon completion of the Walk interval, the overlap enters the pedestrian clearance interval.
b) The overlap remains in the pedestrian clearance interval or steady don't-walk when an included overlap phase is yellow and simultaneously another included overlap phase is not next in the associated phase sequence.
c) Otherwise, the overlap output is steady don't-walk.

#### 3.5.2.1.8.1.1.4 Configure Overlap Type—Bicycle Normal

Upon request from a management station, the ASC shall store that the Overlap control type is 'Normal.'

#### 3.5.2.1.8.1.1.5 Configure Overlap Type—Transit Normal

Upon request from a management station, the ASC shall store that the Overlap control type is 'Normal.'

#### 3.5.2.1.8.1.1.6 Configure Overlap Type—Flashing Yellow Arrow—3 Section Head

Upon request from a management station, the ASC shall store that the Overlap control type is 'fYA3-1'.

#### 3.5.2.1.8.1.1.7 Configure Overlap Type—Flashing Yellow Arrow—4 Section Head

Upon request from a management station, the ASC shall store that the Overlap control type is 'fYA4-1'.

#### 3.5.2.1.8.1.1.8 Configure Overlap Type—Flashing Yellow Arrow for Pedestrians

Upon request from a management station, the ASC shall store the phase numbers that are pedestrian modifier phases for a vehicle overlap. The pedestrian modifier phase, when active, affects how the overlap responds, based on the overlap type.

Do Not Copy Without Written Permission © 2023 AASHTO / ITE / NEMA

#### 3.5.2.1.8.1.1.9 Configure Overlap Type—Flashing Red Arrow—3 Section Head

Upon request from a management station, the ASC shall store that the Overlap control type is 'fRA3'.

#### 3.5.2.1.8.1.1.10 Configure Overlap Type—Flashing Red Arrow—4 Section Head

Upon request from a management station, the ASC shall store that the Overlap control type is 'fRA4'.

#### 3.5.2.1.8.1.1.11 Configure Overlap Type—Transit Specific Signal Head

Upon request from a management station, the ASC shall store that the Overlap control type is 'Normal.'

#### 3.5.2.1.8.1.1.12 Configure Overlap Type—2 Section Transit Specific Signal Head

Upon request from a management station, the ASC shall store that the Overlap control type is 'transit-2'.

#### 3.5.2.1.8.1.1.13 Configure Overlap Type—Minus Green Yellow Alternate

Upon request from a management station, the ASC shall store that the Overlap control type is 'Vehicle Minus Green and Yellow Alternate':

a) when an overlap included phase is green and an overlap modifier phase is NOT green.
b) when an overlap included phase is yellow (or red clearance) and an overlap included phase is next and an overlap modifier phase is NOT green and an overlap modifier phase is not next.

The overlap output is yellow when an overlap included phase is yellow and an overlap modifier phase is NOT yellow and an overlap included phase is not next. The overlap output is red whenever the overlap green and yellow are not ON.

#### 3.5.2.1.8.1.2 Configure Overlap Included Phases

Upon request from a management station, the ASC shall store the phase numbers that are included phases for the overlap.

#### 3.5.2.1.8.1.3 Configure Overlap Modifier Phases

Upon request from a management station, the ASC shall store the phase numbers that are modifier phases for a vehicle overlap. The modifier phase, when present, affects how the overlap responds, based on the overlap type.

#### 3.5.2.1.8.1.4 Configure Pedestrian Modifier Phases

Upon request from a management station, the ASC shall store the phase numbers that are pedestrian modifier phases for a vehicle overlap. The pedestrian modifier phase, when active, affects how the overlap responds, based on the overlap type.

#### 3.5.2.1.8.1.5 Configure Overlap Trailing Green

Upon request from a management station, the ASC shall store the trailing green time in seconds, from 0 to 255 seconds, which is the time that an overlap green, which would normally terminate, might be extended.

> Note: This requirement also covers the use of a Flashing Yellow Arrow in lieu of or in addition to a Green.

© 2023 AASHTO / ITE / NEMA Do Not Copy Without Written Permission

#### 3.5.2.1.8.1.6 Configure Overlap Trailing Yellow

Upon request from a management station, the ASC shall store the trailing yellow time in tenths of a second, from 0 to 25.5 seconds. When the overlap green time has been extended (see Overlap Trailing Green), then this value determines the current length of the overlap's yellow duration.

> Note: This requirement also covers the use of a Flashing Yellow Arrow in lieu of or in addition to a Yellow.

#### 3.5.2.1.8.1.7 Configure Overlap Trailing Red Clearance

Upon request from a management station, the ASC shall store the trailing red time in tenths of a second, from 0 to 25.5 seconds. When the overlap green time has been extended (see Overlap Trailing Green), then this value determines the current length of the overlap's red clearance duration.

> Note: This requirement also covers the use of a Flashing Red Arrow in lieu of or in addition to a red clearance indication.

#### 3.5.2.1.8.1.8 Configure Overlap Walk

Upon request from a management station, the ASC shall store the walk time for a pedestrian overlap in seconds, from 0 to 255 seconds.

#### 3.5.2.1.8.1.9 Configure Overlap Pedestrian Clearance

Upon request from a management station, the ASC shall store the duration of the pedestrian clearance time, from 0 to 255 seconds.

### 3.5.2.1.8.2 Retrieve Overlaps Requirements

The requirements to retrieve the overlaps within the ASC follow.

#### 3.5.2.1.8.2.1 Determine Maximum Number of Overlaps

Upon request from a management station, the ASC shall return the maximum number of overlaps, as a number from 1 to 255 channels that can be configured in the ASC.

### 3.5.2.1.9 Manage Preempt Configuration Requirements

The requirements to manage the preemptions within the ASC follow.

### 3.5.2.1.9.1 Configure Preempts for Phase-Based ASC Requirements

The requirements to configure preempts within phase-based ASC follow.

#### 3.5.2.1.9.1.1 Enable/Disable Preempt Inputs

Upon request from a management station, the ASC shall store the enabling or disabling of a preemption input within the ASC.

> Note: Disabling preempts should be done with extreme caution.

#### 3.5.2.1.9.1.2 Configure Preempt Control Requirements

The requirements to control the preempts within the ASC follow.

Do Not Copy Without Written Permission © 2023 AASHTO / ITE / NEMA

#### 3.5.2.1.9.1.2.1 Configure Preempt Control—Non-Locking Memory

Upon request from a management station, the ASC shall store if operation is enabled that does not require detector memory, meaning that the preempt does not occur, if the preempt request terminates prior to the expiration of the preempt delay time.

#### 3.5.2.1.9.1.2.2 Configure Preempt Control—Preempt Override Flash

Upon request from a management station, the ASC shall store if a preempt is not allowed to override automatic flash.

#### 3.5.2.1.9.1.2.3 Configure Preempt Control—Preempt Override Priority

Upon request from a management station, the ASC shall store if a preempt is not allowed to override the next higher numbered preempt definition. Normally, a lower number preempt may override a higher number preempt, e.g., preempt number 1 may override preempt 2. This requirement prevents the lower number preempt from overriding the next higher numbered preempt.

#### 3.5.2.1.9.1.2.4 Configure Preempt Control—Flash Dwell

Upon request from a management station, the ASC shall store if the phases identified as preempt dwell phases and the overlaps identified as preempt dwell overlaps flash Yellow during the Preempt Dwell interval. If this feature is enabled, the ASC flashes all other phases and overlaps in a red indication.

#### 3.5.2.1.9.1.3 Configure Preempt Link

Upon request from a management station, the ASC shall store the identity of a higher priority preempt (lower preempt number) to be combined with the current preempt. At the end of the preempt's Dwell Green time, the ASC automatically calls the linked preempt, which remains active until the preempt signal for the current preempt is removed. The ASC does not link a lower priority preempt (higher preempt number) or a non-valid preempt with the current preempt.

#### 3.5.2.1.9.1.4 Configure Preempt Delay

Upon request from a management station, the ASC shall store the time, in seconds, from 0 to 600 seconds, that a preempt input might be active prior to initiating a preempt sequence. If a call for a non-locking preempt is removed prior to completion of this time, the ASC does not initiate the preempt sequence.

#### 3.5.2.1.9.1.5 Configure Preempt Minimum Duration

Upon request from a management station, the ASC shall store the minimum duration time in seconds, from 0 to 65535 seconds, that a preempt might be active. The timing begins at the end of the preempt's delay time, if one is defined, and prevents an exit from the preempt dwell interval until this time has elapsed.

#### 3.5.2.1.9.1.6 Configure Preempt Enter Minimum Green Time

Upon request from a management station, the ASC shall store the minimum green time for a preempt in seconds, from 0 to 255 seconds. A preempt initiated transition does not cause the termination of an existing Green display prior to the lesser of the phase's Minimum Green Time or this preempt minimum green time. If the preempt minimum green time is set to zero, when the ASC immediately terminates the phase's Green display.

© 2023 AASHTO / ITE / NEMA Do Not Copy Without Written Permission

#### 3.5.2.1.9.1.7 Configure Preempt Enter Minimum Walk Time

Upon request from a management station, the ASC shall store the minimum walk time for a preempt in seconds, from 0 to 255 seconds. A preempt initiated transition does not cause the termination of an existing Walk display prior to the lesser of the phase's Minimum Walk Time or this preempt minimum walk time. If the preempt minimum walk time is set to zero, the ASC immediately terminates the phase's Walk display.

#### 3.5.2.1.9.1.8 Configure Preempt Enter Pedestrian Clearance Time

Upon request from a management station, the ASC shall store the pedestrian clearance time for a normal Walk display terminated by a preempt initiated transition in seconds, from 0 to 255 seconds. A preempt initiated transition does not cause the termination of an existing pedestrian clearance display prior to the lesser of the phase's Pedestrian clearance time or this preempt pedestrian clearance time. If the preempt enter pedestrian clearance time is set to zero, the ASC immediately terminates the phase's Pedestrian Clearance (Flashing Don't Walk) display.

#### 3.5.2.1.9.1.9 Configure Preempt Track Clearance Time

Upon request from a management station, the ASC shall store the track clearance time for the defined preempt track phases in seconds, from 0 to 255 seconds. The track clearance time consists of the track clearing intervals and the clear track interval. If the preempt track clearance time is set to zero, the ASC omits the track clearance movement.

#### 3.5.2.1.9.1.10 Configure Preempt Minimum Dwell Time

Upon request from a management station, the ASC shall store the minimum green time for a preempt to remain in a preempt dwell interval, in seconds, from 1 to 255 seconds. The ASC determines the phases that are active during the dwell interval green time based on the settings for the preempt dwell phases. The preempt dwell interval green duration does not terminate prior to the completion of the preempt minimum duration time and the preempt minimum dwell time, and if the preempt call is no longer present / active.

#### 3.5.2.1.9.1.11 Configure Preempt Maximum Presence Time

Upon request from a management station, the ASC shall store the maximum presence time in seconds, from 0 to 65535 seconds, for which a preempt can remain active. If this preempt presence time has elapsed, the call for preemption is considered invalid until a change of the preempt's state occurs (such as the preempt is no longer active). If the preempt maximum presence time is set to zero, the ASC is to disable the preempt maximum presence time.

#### 3.5.2.1.9.1.12 Configure Preempt Track Clearance Phases

Upon request from a management station, the ASC shall store the phases to be active for the preempt during the preempt track clearance intervals.

#### 3.5.2.1.9.1.13 Configure Preempt Dwell Phases

Upon request from a management station, the ASC shall store a list of the phases to be serviced by a preempt during the preempt dwell interval, which is followed by the phases served in the preemption cycling phase.

Do Not Copy Without Written Permission © 2023 AASHTO / ITE / NEMA

#### 3.5.2.1.9.1.14 Configure Preempt Dwell Pedestrian Movements

Upon request from a management station, the ASC shall store a list of the pedestrian movement(s) to be served by a preempt during the preempt dwell interval, which is followed by the pedestrian movements defined in the preempt cycling pedestrian list.

#### 3.5.2.1.9.1.15 Configure Preempt Exit Phases

Upon request from a management station, the ASC shall store a list of the phases that are allowed to be active following the preempt dwell interval.

#### 3.5.2.1.9.1.16 Configure Preempt Exit Phase Strategy Requirements

The requirements to configure the preempt exit strategy within the ASC follow.

#### 3.5.2.1.9.1.16.1 Configure Preempt Exit Phase Strategy—Exit to Normal Operation

Upon request from a management station, the ASC shall store the exit strategy to be used following the end of the preempt dwell interval is normal operation during which the ASC immediately enters the exit phases to be active as configured following the preempt dwell interval.

#### 3.5.2.1.9.1.16.2 Configure Preempt Exit Phase Strategy—Exit to Coordination

Upon request from a management station, the ASC shall store the exit strategy to be used following the end of the preempt dwell interval is to go to “coordination” during which the ASC immediately returns to the place in the coordinated cycle where the ASC would have been had there been no preempt.

#### 3.5.2.1.9.1.16.3 Configure Preempt Exit Phase Strategy—Exit to Queue Delay Recovery

Upon request from a management station, the ASC shall store the exit strategy to be used following the end of the preempt dwell interval is to go to “queue delay recovery” during which the ASC enters the phase with the highest demand or longest wait time, as determined by the Preempt Exit Priority Level and Preempt Exit Demand Measures.

#### 3.5.2.1.9.1.16.4 Configure Preempt Exit Phase Strategy—Exit to Short Service Phase

Upon request from a management station, the ASC shall store the exit strategy to be used following the end of the preempt dwell interval is to go to the first “short service phase.” A short service phase is a phase where only the preempt minimum green time was serviced during the advanced preemption time or right-of-way transfer time (preemption entry interval).

#### 3.5.2.1.9.1.17 Configure Preempt Track Overlap

Upon request from a management station, the ASC shall store a list of the overlaps to be active for a preempt during the preempt track clearance interval.

#### 3.5.2.1.9.1.18 Configure Preempt Dwell Overlap

Upon request from a management station, the ASC shall store a list of the overlaps to be active for a preempt during the preempt dwell interval.

#### 3.5.2.1.9.1.19 Configure Preempt Cycling Phases

Upon request from a management station, the ASC shall store a list of the phases to be allowed to cycle during the preempt dwell interval.

© 2023 AASHTO / ITE / NEMA Do Not Copy Without Written Permission

#### 3.5.2.1.9.1.20 Configure Preempt Cycling Pedestrian Movements

Upon request from a management station, the ASC shall store a list of the phases with pedestrian movements to be allowed to cycle during the preempt dwell interval.

#### 3.5.2.1.9.1.21 Configure Preempt Cycling Overlaps

Upon request from a management station, the ASC shall store a list of the overlaps to be allowed to cycle during the preempt dwell interval.

#### 3.5.2.1.9.1.22 Configure Preempt Enter Yellow Change Time

Upon request from a management station, the ASC shall store the duration in tenths of a second, from 0 to 25.5 seconds, of the Enter Yellow change interval for a normal Yellow change interval terminated by a preemption initiated transition. A preempt initiated transition does not cause the termination of the Yellow change time prior to the lesser of the phase's Yellow Change time or this preempt Enter Yellow Change time. If the preempt enter Yellow Change time is set to zero, the ASC immediately terminates the phase's Yellow Change time.

#### 3.5.2.1.9.1.23 Configure Preempt Enter Red Clearance Time

Upon request from a management station, the ASC shall store the duration in tenths of a second, from 0 to 25.5 seconds, of the Enter Red Clearance interval for a normal Red Clearance interval terminated by a preemption initiated transition. A preempt initiated transition does not cause the termination of the Red Clearance time prior to the lesser of the phase's Red Clearance time or this preempt Enter Red Clearance time. If the preempt Enter Red Clearance time is set to zero, the ASC immediately terminates the phase's Red Clearance time.

#### 3.5.2.1.9.1.24 Configure Preempt Track Yellow Change Time

Upon request from a management station, the ASC shall store the duration of the Track Yellow change interval in tenths of a second, from 0 to 25.5 seconds. The lesser of the phase's Yellow Change time or this preempt Track Yellow Change time controls the yellow timing for the track clearance movement.

#### 3.5.2.1.9.1.25 Configure Preempt Track Red Clearance Time

Upon request from a management station, the ASC shall store the duration of the Track Red Clearance interval in tenths of a second, from 0 to 25.5 seconds. The lesser of the phase's Red Clearance time or this preempt Track Red Clearance time controls the Red Clearance timing for the track clearance movement.

#### 3.5.2.1.9.1.26 Configure Preempt Exit Priority Levels

Upon request from a management station, the ASC shall store the relative weights for the priority level for each phase when the Queue Delay Recovery exit strategy is used following the end of the preempt dwell interval. The relative weights are in integers, and a higher number indicates a larger weight for the demand and wait time for that phase.

#### 3.5.2.1.9.1.27 Configure Preempt Max Presence Exceeded Requirements

The requirements to configure the actions to be taken if the preempt maximum presence time has been exceeded within the ASC follow.

Do Not Copy Without Written Permission © 2023 AASHTO / ITE / NEMA

#### 3.5.2.1.9.1.27.1 Configure Preempt Max Presence Exceeded—Normal

Upon request from a management station, the ASC shall store that the ASC goes to the Preempt Exit sequence, if the preempt maximum presence time has been exceeded.

#### 3.5.2.1.9.1.27.2 Configure Preempt Max Presence Exceeded—All Flash Red

Upon request from a management station, the ASC shall store that an all-red flash action is to be executed, if the preempt maximum presence time has been exceeded.

#### 3.5.2.1.9.1.28 Configure Preempt Cycling Phases Sequence

Upon request from a management station, the ASC shall store the sequence of the phases that the ASC cycles through during the preempt dwell interval.

#### 3.5.2.1.9.1.29 Configure Preempt Enter Minimum Bicycle Time

Upon request from a management station, the ASC shall store the minimum green time for a bicycle phase during a preempt in seconds, from 0 to 255 seconds. A preempt initiated transition does not cause the termination of an existing bicycle Green display prior to the lesser of the bicycle phase's Minimum Green Time or this preempt minimum green time. If the preempt minimum green time is set to zero, the ASC immediately terminates the bicycle phase's Green display.

#### 3.5.2.1.9.1.30 Configure Preempt Enter Bicycle Clearance Time

Upon request from a management station, the ASC shall store the duration in tenths of a second, from 0 to 25.5 seconds, of the Enter Bicycle Yellow Clearance interval for a normal Bicycle Yellow Clearance interval terminated by a preemption initiated transition. A preempt initiated transition does not cause the termination of the Bicycle Yellow Clearance time prior to the lesser of the bicycle phase's Yellow Clearance time or this preempt Enter Bicycle Yellow Clearance time. If the preempt Bicycle Enter Yellow Clearance time is set to zero, the ASC immediately terminates the bicycle phase's Yellow Clearance time.

#### 3.5.2.1.9.1.31 Configure Preempt Cycling Bicycle Phases

Upon request from a management station, the ASC shall store a list of the bicycle phases to be allowed to cycle during the preempt dwell interval.

#### 3.5.2.1.9.1.32 Configure Preempt Enter Minimum Transit Time

Upon request from a management station, the ASC shall store the minimum green time for a transit phase during a preempt in seconds, from 0 to 255 seconds. A preempt initiated transition does not cause the termination of an existing Green display prior to the lesser of the transit phase's Minimum Green Time or this preempt minimum green time. If the preempt minimum transit time is set to zero, the ASC immediately terminates the transit phase's Green display.

#### 3.5.2.1.9.1.33 Configure Preempt Enter Transit Clearance Time

Upon request from a management station, the ASC shall store the duration in tenths of a second, from 0 to 25.5 seconds, of the Enter Transit Clearance interval for a normal transit clearance interval terminated by a preemption initiated transition. A preempt initiated transition does not cause the termination of the transit clearance time prior to the lesser of the transit phase's clearance time or this preempt Enter Transit Clearance time. If the preempt Enter Transit Clearance time is set to zero, the ASC immediately terminates the transit phase's clearance time.

© 2023 AASHTO / ITE / NEMA Do Not Copy Without Written Permission

#### 3.5.2.1.9.1.34 Configure Preempt Cycling Transit Phases

Upon request from a management station, the ASC shall store a list of the transit phases to be allowed to cycle during the preempt dwell interval.

#### 3.5.2.1.9.1.35 Configure Preempt Gate Description

Upon request from a management station, the ASC shall store a description for a gate that activates during preemption.

### 3.5.2.1.9.2 Retrieve Preempt Configuration for Phase-Based ASC Requirements

The requirements to retrieve the preempts for phase-based ASC follow.

#### 3.5.2.1.9.2.1 Determine Maximum Number of Preempts

Upon request from a management station, the ASC shall return the maximum number of preempts, as a number from 1 to 255 channels that can be configured in the ASC.

### 3.5.2.1.10 Manage Timing Pattern Scheduler Requirements

The requirements to manage the scheduler for the ASC follow.

### 3.5.2.1.10.1 Configure Timing Pattern Scheduler Requirements

The requirements to configure the event scheduler for the ASC follow.

#### 3.5.2.1.10.1.1 Configure Timebase Pattern Synchronization Time

Upon request from a management station, the ASC shall store the timebased pattern synchronization reference time, in minutes past midnight, from 0 to 65535 minutes. If this value is 65535, the start or activation time (in hours and minutes since midnight of that day) of the timebased pattern is used as the Synchronization reference by the ASC.

#### 3.5.2.1.10.1.2 Configure Timebased Action—Pattern

Upon request from a management station, the ASC shall store the identity of the timing pattern that is active when the Action is active. If the timebased action pattern is set to zero, the ASC reverts to a lower priority entity such as 'interconnect' (if available).

#### 3.5.2.1.10.1.3 Configure Timebased Action—Auxiliary Functions Requirements

The requirements to enable or disable auxiliary functions (up to 3) and the dimming function within the ASC follow.

> Note: The use of vendor-specific auxiliary function definitions may lead to interoperability problems.

##### 3.5.2.1.10.1.3.1 Configure Timebased Action—Auxiliary Function 1

Upon request from a management station, the ASC shall store if Auxiliary Function 1 is enabled.

##### 3.5.2.1.10.1.3.2 Configure Timebased Action—Auxiliary Function 2

Upon request from a management station, the ASC shall store if Auxiliary Function 2 is enabled.

Do Not Copy Without Written Permission © 2023 AASHTO / ITE / NEMA

#### 3.5.2.1.10.1.3.3 Configure Timebased Action—Auxiliary Function 3

Upon request from a management station, the ASC shall store if Auxiliary Function 3 is enabled.

#### 3.5.2.1.10.1.3.4 Configure Timebased Action—Dimming

Upon request from a management station, the ASC shall store if dimming is enabled. The ASC only enables dimming if either the unit's control mode dimming indicator or a dimming input is also enabled.

### 3.5.2.1.10.1.4 Configure Timebased Action—Special Functions Requirements

The requirements to enable or disable special functions (up to 8) within the ASC follow.

> Note: The use of vendor-specific special function definitions may lead to interoperability problems.

#### 3.5.2.1.10.1.4.1 Configure Timebased Action—Special Function 1

Upon request from a management station, the ASC shall allow activation of Special Function 1.

#### 3.5.2.1.10.1.4.2 Configure Timebased Action—Special Function 2

Upon request from a management station, the ASC shall allow activation of Special Function 2.

#### 3.5.2.1.10.1.4.3 Configure Timebased Action—Special Function 3

Upon request from a management station, the ASC shall allow activation of Special Function 3.

#### 3.5.2.1.10.1.4.4 Configure Timebased Action—Special Function 4

Upon request from a management station, the ASC shall allow activation of Special Function 4.

#### 3.5.2.1.10.1.4.5 Configure Timebased Action—Special Function 5

Upon request from a management station, the ASC shall allow activation of Special Function 5.

#### 3.5.2.1.10.1.4.6 Configure Timebased Action—Special Function 6

Upon request from a management station, the ASC shall allow activation of Special Function 6.

#### 3.5.2.1.10.1.4.7 Configure Timebased Action—Special Function 7

Upon request from a management station, the ASC shall allow activation of Special Function 7.

#### 3.5.2.1.10.1.4.8 Configure Timebased Action—Special Function 8

Upon request from a management station, the ASC shall allow activation of Special Function 8.

### 3.5.2.1.10.2 Retrieve Timing Pattern Scheduler Requirements

The requirements to retrieve the scheduler and the associated action parameters defined within the ASC follow.

© 2023 AASHTO / ITE / NEMA Do Not Copy Without Written Permission

#### 3.5.2.1.10.2.1 Determine Maximum Number of Timebased Actions

Upon request from a management station, the ASC shall return the maximum number of timebased actions that can be configured in the ASC.

#### 3.5.2.1.10.2.2 Determine Action in Effect

Upon request from a management station, the ASC shall return what action plans entries are currently in effect.

### 3.5.2.1.11 Manage I/O Mapping Requirements

The ASC communicates with different Field I/O Devices in the cabinet. The number and types of Field I/O Devices depend on the transportation cabinet architecture used. The types of Field I/O Devices supported for each transportation cabinet architecture are indicated in Table 6.

**Table 6 Field I/O Devices Supported**

| Cabinet Architecture | Field I/O Devices Supported |
|---|---|
| Model 332 Cabinet | Model 2070-2A (or equivalent) - Defined in ATC 5202 - Model 2070 Controller Standard Version 3. |
| NEMA TS 1 Cabinet | Model 2070-8 (or equivalent) - Defined in ATC 5202 - Model 2070 Controller Standard Version 3. |
| NEMA TS 2 Type 1 Cabinet | Terminal & Facilities (T&F) Bus Interface Unit (BIU) - Defined in NEMA TS 2-2021.<br>Detector Bus Interface Unit (BIU) - Defined in NEMA TS 2-2021. |
| NEMA TS 2 Type 2 Cabinet | Model 2070-8 (or equivalent) - Defined in ATC 5202 - Model 2070 Controller Standard Version 3. |
| ITS Cabinet | Serial Interface Unit - Defined in ITS Cabinet Standard, v01.02.17b. |

In addition to these, the ASC may communicate with Auxiliary I/O devices (such as the front panel AUX switch on the 170 and 2070 controllers) and manufacturer-specific custom I/O (such as 'D' connectors on TS1 controllers).

The ASC I/O mapping supports all these types of I/O devices and combinations of them to create a mapping of all I/O active at any one time. Multiple I/O mappings are supported that allow default I/O maps for different situations and cabinet configurations to be pre-loaded.

The Active I/O map is the I/O map that the ASC is currently using for signal operations. Changing the Active I/O map requires a database transaction. A new Active I/O map will only take effect if the database transaction data is successfully verified and the I/O Map Activate Conditions are satisfied (see Section 3.5.2.1.11.2.4).

The requirements to manage the Input/Output (I/O) Mapping within the ASC follow.

#### 3.5.2.1.11.1 Configure I/O Mapping Requirements

The requirements to configure the I/O Mapping within the ASC follow.

#### 3.5.2.1.11.1.1 Set Active I/O Map

Upon request from a management station, the ASC shall change the Active I/O map currently being used. This change is required to be made as part of a database transaction, and only if the Activate Requirements specified in Section 3.5.2.1.11.2.4 are satisfied for the new I/O map to take effect.

Do Not Copy Without Written Permission © 2023 AASHTO / ITE / NEMA

#### 3.5.2.1.11.1.2 Configure I/O Map Requirements

The requirements to configure an I/O Map within the ASC follow.

##### 3.5.2.1.11.1.2.1 Configure I/O Map Description

Upon request from a management station, the ASC shall store the description for an I/O map. This description may be any text describing the I/O map such as the intended cabinet type, the intended intersection, etc.

##### 3.5.2.1.11.1.2.2 Configure I/O Map Input Requirements

The requirements to configure the inputs for an I/O Map within the ASC follow.

###### 3.5.2.1.11.1.2.2.1 Configure I/O Map Input Device

Upon request from a management station, the ASC shall store a value indicating the device for each input pin in an I/O map.

###### 3.5.2.1.11.1.2.2.2 Configure I/O Map Input Device Pin

Upon request from a management station, the ASC shall store a value indicating the device pin number for each input pin in an I/O map.

###### 3.5.2.1.11.1.2.2.3 Configure I/O Map Input Function

Upon request from a management station, the ASC shall store a value indicating the input function to be mapped to each input pin in an I/O map.

##### 3.5.2.1.11.1.2.3 Configure I/O Map Output Requirements

The requirements to configure the outputs for an I/O Map within the ASC follow.

###### 3.5.2.1.11.1.2.3.1 Configure I/O Map Output Device

Upon request from a management station, the ASC shall store a value indicating the device for each output pin in an I/O map.

###### 3.5.2.1.11.1.2.3.2 Configure I/O Map Output Device Pin

Upon request from a management station, the ASC shall store a value indicating the device pin number for each output pin in an I/O map.

###### 3.5.2.1.11.1.2.3.3 Configure I/O Map Output Function

Upon request from a management station, the ASC shall store a value indicating the output function to be mapped to each output pin in an I/O map.

#### 3.5.2.1.11.2 Determine I/O Mapping Requirements

The requirements to retrieve the I/O Mapping within the ASC follow.

##### 3.5.2.1.11.2.1 Retrieve Maximum Number of I/O Maps

Upon request from a management station, the ASC shall return the maximum number of I/O maps supported by the ASC.

© 2023 AASHTO / ITE / NEMA Do Not Copy Without Written Permission

#### 3.5.2.1.11.2.2 Retrieve Maximum Number of I/O Map Inputs

Upon request from a management station, the ASC shall return the maximum number of I/O map inputs supported by the ASC. This is the number of inputs that the ASC can support at any one time from all input devices.

#### 3.5.2.1.11.2.3 Retrieve Maximum Number of I/O Map Outputs

Upon request from a management station, the ASC shall return the maximum number of I/O map outputs supported by the ASC. This is the number of inputs that the ASC can support at any one time from all input devices.

#### 3.5.2.1.11.2.4 Retrieve I/O Mapping Activate Conditions

Upon request from a management station, the ASC shall return requirements to be fulfilled for a new I/O map to take effect. These requirements may include that a cabinet door be open (indicating that a technician is at the cabinet), that the cabinet be in any flash state, that the cabinet be in all red flash, that the cabinet be in cabinet (CVM) flash, or that the ASC be restarted.

#### 3.5.2.1.11.2.5 Retrieve I/O Mapping Input Functions

Upon request from a management station, the ASC shall return a listing of the input functions that the ASC supports for I/O mapping.

#### 3.5.2.1.11.2.6 Retrieve I/O Mapping Output Functions

Upon request from a management station, the ASC shall return a listing of the output function that the ASC supports for I/O mapping.

#### 3.5.2.1.11.2.7 Retrieve I/O Map Input Device Pin Status

Upon request from a management station, the ASC shall return the status of each input in an I/O map.

#### 3.5.2.1.11.2.8 Retrieve I/O Map Output Device Pin Status

Upon request from a management station, the ASC shall return the status of each output in an I/O map.

#### 3.5.2.1.11.2.9 Enumerate I/O Mapping Device Pin Requirements

The ASC MIB shall contain enumerations of the standard devices and their device pins that an ASC shall support. These enumerations are:

Do Not Copy Without Written Permission © 2023 AASHTO / ITE / NEMA

**3.5.2.1.11.2.9.1 Enumerate I/O Map—FIO Inputs**

**3.5.2.1.11.2.9.2 Enumerate I/O Map—FIO Outputs**

**3.5.2.1.11.2.9.3 Enumerate I/O Map—TS1 Inputs**

**3.5.2.1.11.2.9.4 Enumerate I/O Map—TS1 Outputs**

**3.5.2.1.11.2.9.5 Enumerate I/O Map—TS2 BIU Inputs**

**3.5.2.1.11.2.9.6 Enumerate I/O Map—TS2 BIU Outputs**

**3.5.2.1.11.2.9.7 Enumerate I/O Map—ITS Cabinet SIU Inputs**

**3.5.2.1.11.2.9.8 Enumerate I/O Map—ITS Cabinet SIU Outputs**

**3.5.2.1.11.2.9.9 Enumerate I/O Map—Auxiliary Device Inputs**

**3.5.2.1.11.2.9.10 Enumerate I/O Map—Auxiliary Device Outputs**

#### 3.5.2.1.12 Manage Intra-Cabinet Communications Requirements

The requirements to manage intra-cabinet communications within the ASC follow.

#### 3.5.2.1.12.1 Determine Serial Bus 1 Device Present

Upon request from a management station, the ASC shall return if a device is present for a Serial Bus 1 address. The ASC only transmits command frames to those devices that are present as determined by this value.

#### 3.5.2.1.12.2 Retrieve Intra-Cabinet Communications Requirements—TS2

The requirements to retrieve intra-cabinet communications configuration in the ASC follow.

#### 3.5.2.1.12.2.1 Determine TS2 Port 1 Device Present

Upon request from a management station, the ASC shall return if a device is present for a TS2 Port 1 address. The ASC only transmits command frames to those devices that are present as determined by this value.

#### 3.5.2.1.12.2.2 Determine TS2 Port 1 Frame 40 Enable

Upon request from a management station, the ASC shall return if Frame 40 message to the device is enabled for a TS2 Port 1 address.

#### 3.5.2.1.13 Manage ADA Support Requirements

The requirements to manage ADA Support in the ASC follow.

#### 3.5.2.1.13.1 Configure ADA Support Requirements

The requirements to configure the ASC to support ADA in the ASC follow.

#### 3.5.2.1.13.1.1 Configure APS Push Button Minimum Press Time

Upon request from a management station, the ASC shall store the time in tenths of a second, from 0.0 to 25.5 seconds, that an APS Push Button needs to be pressed as a minimum to actuate any APS features. This requirement enables the ASC to receive inputs from installed Accessible Pedestrian Signal (APS) push buttons to actuate any APS features. MUTCD Section 4E.13, item 02 states that the push button

© 2023 AASHTO / ITE / NEMA Do Not Copy Without Written Permission

should be pressed for 1.0 seconds or greater to actuate any APS features. A value of 0.0 indicates that the APS features are disabled.

#### 3.5.2.1.13.1.2 Configure APS Push Button to Phase Association

Upon request from a management station, the ASC shall return a list of the phase identifiers with whom an APS push button is associated with.

#### 3.5.2.1.13.1.3 Configure APS Extra Crossing Time

Upon request from a management station, the ASC shall store the time in seconds, from 0 to 255 seconds, that the pedestrian clearance time is extended, if an APS push button has been pressed for equal to or greater than the APS push button minimum press time. A value of 0 indicates no additional crossing time.

#### 3.5.2.1.13.2 Determine Maximum Number of Pedestrian Buttons

Upon request from a management station, the ASC shall return the maximum number of pedestrian buttons supported by the device.

### 3.5.2.1.14 Manage Block Object Requirements

The requirements to manage the Block Objects within the ASC follow.

#### 3.5.2.1.14.1 Configure Block Object Requirements

The requirements to configure the Block Objects within the ASC follow.

#### 3.5.2.1.14.1.1 Configure Block Object Get Control Requirements

The requirements to define the ASC-specific block objects within the ASC follow.

#### 3.5.2.1.14.1.1.1 Configure Block Object Get Control—Phase Data

Upon request from a management station, the ASC shall store the Block Object reference parameters needed to configure the phases within the ASC.

#### 3.5.2.1.14.1.1.2 Configure Block Object Get Control—Vehicle Detector Data

Upon request from a management station, the ASC shall store the Block Object reference parameters needed to configure the vehicle detectors within the ASC.

#### 3.5.2.1.14.1.1.3 Configure Block Object Get Control—Pedestrian Detector Data

Upon request from a management station, the ASC shall store the Block Object reference parameters needed to configure the pedestrian detectors within the ASC.

#### 3.5.2.1.14.1.1.4 Configure Block Object Get Control—Pattern Data

Upon request from a management station, the ASC shall store the Block Object reference parameters needed to configure the timing patterns within the ASC.

Do Not Copy Without Written Permission © 2023 AASHTO / ITE / NEMA

#### 3.5.2.1.14.1.1.5 Configure Block Object Get Control—Split Data

Upon request from a management station, the ASC shall store the Block Object reference parameters needed to configure the phase split definitions within the ASC.

#### 3.5.2.1.14.1.1.6 Configure Block Object Get Control—Time Base Data

Upon request from a management station, the ASC shall store the Block Object reference parameters needed to configure the time-based pattern and action patterns within the ASC.

#### 3.5.2.1.14.1.1.7 Configure Block Object Get Control—Preempt Data

Upon request from a management station, the ASC shall store the Block Object reference parameters needed to configure the preempts within the ASC.

#### 3.5.2.1.14.1.1.8 Configure Block Object Get Control—Sequence Data

Upon request from a management station, the ASC shall store the Block Object reference parameters needed to configure the phase sequences within the ASC.

#### 3.5.2.1.14.1.1.9 Configure Block Object Get Control—Channel Data

Upon request from a management station, the ASC shall store the Block Object reference parameters needed to configure the channels within the ASC.

#### 3.5.2.1.14.1.1.10 Configure Block Object Get Control—Overlap Data

Upon request from a management station, the ASC shall store the Block Object reference parameters needed to configure the phase overlaps within the ASC.

#### 3.5.2.1.14.1.1.11 Configure Block Object Get Control—Port 1 Data

Upon request from a management station, the ASC shall store the Block Object reference parameters needed to configure the port 1 definitions within the ASC.

#### 3.5.2.1.14.1.1.12 Configure Block Object Get Control—Schedule Data

Upon request from a management station, the ASC shall store the Block Object reference parameters needed to configure the generic schedule definitions within the ASC.

#### 3.5.2.1.14.1.1.13 Configure Block Object Get Control—Day Plan Data

Upon request from a management station, the ASC shall store the Block Object reference parameters needed to configure the day plan-specific generic schedule definitions within the ASC.

#### 3.5.2.1.14.1.1.14 Configure Block Object Get Control—Event Configuration Data

Upon request from a management station, the ASC shall store the Block Object reference parameters needed to configure the event configuration definitions within the ASC.

#### 3.5.2.1.14.1.1.15 Configure Block Object Get Control—Event Class Data

Upon request from a management station, the ASC shall store the Block Object reference parameters needed to configure the event class definitions within the ASC.

© 2023 AASHTO / ITE / NEMA Do Not Copy Without Written Permission

#### 3.5.2.1.14.1.1.16 Configure Block Object Get Control—Dynamic Object Configuration Data

Upon request from a management station, the ASC shall store the Block Object reference parameters needed to configure the dynamic object configuration data within the ASC.

#### 3.5.2.1.14.1.1.17 Configure Block Object Get Control—Dynamic Object Owner Data

Upon request from a management station, the ASC shall store the Block Object reference parameters needed to configure the dynamic object owner data within the ASC.

#### 3.5.2.1.14.1.1.18 Configure Block Object Get Control—Dynamic Object Status Data

Upon request from a management station, the ASC shall store the Block Object reference parameters needed to configure the dynamic object status data within the ASC.

#### 3.5.2.1.14.1.1.19 Configure Block Object Get Control—Miscellaneous ASC Data

Upon request from a management station, the ASC shall store the Block Object reference parameters needed to configure miscellaneous ASC-related data within the ASC.

#### 3.5.2.1.14.1.1.20 Configure Block Object Get Control—Version 3 Additional Phase Data

Upon request from a management station, the ASC shall store the Block Object reference parameters needed to configure the additional phase configuration data that were added in Version 03 of this standard within the ASC.

#### 3.5.2.1.14.1.1.21 Configure Block Object Get Control—Version 3 Additional Vehicle Detector Data

Upon request from a management station, the ASC shall store the Block Object reference parameters needed to configure the additional Vehicle Detector data that were added in Version 03 of this standard within the ASC.

#### 3.5.2.1.14.1.1.22 Configure Block Object Get Control—Version 3 Vehicle Detector Volume Occupancy Report Data

Upon request from a management station, the ASC shall store the Block Object reference parameters needed to configure the Vehicle Detector Volume / Occupancy / Speed Report data.

#### 3.5.2.1.14.1.1.23 Configure Block Object Get Control—Version 3 Additional Pedestrian Detector Data [Deprecated]

Upon request from a management station, the ASC shall store the Block Object reference parameters needed to configure the additional pedestrian detector data that were added in Version 03 of this standard within the ASC.

#### 3.5.2.1.14.1.1.24 Configure Block Object Get Control—Version 3 Pedestrian Detector Report Data

Upon request from a management station, the ASC shall store the Block Object reference parameters needed to configure the Pedestrian Detector Report data.

Do Not Copy Without Written Permission © 2023 AASHTO / ITE / NEMA

#### 3.5.2.1.14.1.1.25 Configure Block Object Get Control—Version 3 Pedestrian Push Button Configuration Data

Upon request from a management station, the ASC shall store the Block Object reference parameters needed to configure the Pedestrian Push Button detector data.

#### 3.5.2.1.14.1.1.26 Configure Block Object Get Control—Version 3 Additional Pattern Data [Deprecated]

Upon request from a management station, the ASC shall store the Block Object reference parameters needed to configure the additional pattern configuration data that were added in Version 03 of this standard within the ASC.

#### 3.5.2.1.14.1.1.27 Configure Block Object Get Control—Version 3 Additional Split Data

Upon request from a management station, the ASC shall store the Block Object reference parameters needed to configure the additional split configuration data that were added in Version 03 of this standard within the ASC.

#### 3.5.2.1.14.1.1.28 Configure Block Object Get Control—Version 3 Additional Preempt Data

Upon request from a management station, the ASC shall store the Block Object reference parameters needed to configure the additional preempt data that were added in Version 03 of this standard within the ASC.

#### 3.5.2.1.14.1.1.29 Configure Block Object Get Control—Version 3 Preempt Queue Delay Data

Upon request from a management station, the ASC shall store the Block Object reference parameters needed to configure the preempt queue delay data that were added in Version 03 of this standard within the ASC.

#### 3.5.2.1.14.1.1.30 Configure Block Object Get Control—Version 3 Additional Channel Data [Deprecated]

Upon request from a management station, the ASC shall store the Block Object reference parameters needed to configure the additional channel data that were added in Version 03 of this standard within the ASC.

#### 3.5.2.1.14.1.1.31 Configure Block Object Get Control—Version 3 Additional Overlap Data

Upon request from a management station, the ASC shall store the Block Object reference parameters needed to configure the additional overlap data that were added in Version 03 of this standard within the ASC.

#### 3.5.2.1.14.1.1.32 Configure Block Object Get Control—Communications Port Definition Data

Upon request from a management station, the ASC shall store the Block Object reference parameters needed to configure the communications port definition data within the ASC.

#### 3.5.2.1.14.1.1.33 Configure Block Object Get Control—Ethernet Communications Port Definition Data

Upon request from a management station, the ASC shall store the Block Object reference parameters needed to configure the Ethernet communications port definition data within the ASC.

© 2023 AASHTO / ITE / NEMA Do Not Copy Without Written Permission

#### 3.5.2.1.14.1.1.34 Configure Block Object Get Control—SIU Communications Port 1 Definition Data

Upon request from a management station, the ASC shall store the Block Object reference parameters needed to configure the SIU communications port 1 definition data within the ASC.

#### 3.5.2.1.14.1.1.35 Configure Block Object Get Control—Version 3 Additional Miscellaneous ASC Data

Upon request from a management station, the ASC shall store the Block Object reference parameters needed to configure the additional miscellaneous ASC-related data that were added in Version 03 of this standard within the ASC.

#### 3.5.2.1.14.1.1.36 Configure Block Object Get Control—User-Defined Backup Timer Content Data

Upon request from a management station, the ASC shall store the Block Object reference parameters needed to configure the user-defined backup timer content data within the ASC.

#### 3.5.2.1.14.1.1.37 Configure Block Object Get Control—ASC Location Data

Upon request from a management station, the ASC shall store the Block Object reference parameters needed to configure the ASC location data within the ASC.

#### 3.5.2.1.14.1.1.38 Configure Block Object Get Control—Global Set ID Data

Upon request from a management station, the ASC shall store the Block Object reference parameters needed to configure the ASC global configuration set ID data within the ASC.

#### 3.5.2.1.14.1.1.39 Configure Block Object Get Control—ASC Environmental Monitoring Data

Upon request from a management station, the ASC shall store the Block Object reference parameters needed to configure the ASC environmental sensor monitoring data within the ASC.

#### 3.5.2.1.14.1.1.40 Configure Block Object Get Control—ASC Cabinet Temperature Sensor Data

Upon request from a management station, the ASC shall store the Block Object reference parameters needed to configure the ASC Cabinet Temperature Sensor data within the ASC.

#### 3.5.2.1.14.1.1.41 Configure Block Object Get Control—ASC Cabinet Humidity Sensor Data

Upon request from a management station, the ASC shall store the Block Object reference parameters needed to configure the ASC Cabinet Humidity Sensor data within the ASC.

#### 3.5.2.1.14.1.1.42 Configure Block Object Get Control—I/O Input Mapping Data

Upon request from a management station, the ASC shall store the Block Object reference parameters needed to configure the input devices, pins, and functions map data for the ASC.

#### 3.5.2.1.14.1.1.43 Configure Block Object Get Control—I/O Input Mapping Status Data [Deprecated]

Upon request from a management station, the ASC shall store the Block Object reference parameters needed to configure the input pin descriptions and status map data for the ASC.

 © 2023 AASHTO / ITE / NEMA

#### 3.5.2.1.14.1.1.44 Configure Block Object Get Control—I/O Output Mapping Data

Upon request from a management station, the ASC shall store the Block Object reference parameters needed to configure the output devices, pins, and functions map data within the ASC.

#### 3.5.2.1.14.1.1.45 Configure Block Object Get Control—I/O Output Mapping Status Data [Deprecated]

Upon request from a management station, the ASC shall store the Block Object reference parameters needed to configure the output pin descriptions and status map data for the ASC.

#### 3.5.2.1.14.1.1.46 Configure Block Object Get Control—I/O Mapping Description Data

Upon request from a management station, the ASC shall store the Block Object reference parameters needed to configure the input/output map description data for the ASC.

#### 3.5.2.1.14.1.1.47 Configure Block Object Get Control—Connected Vehicle Configuration Data [Deprecated]

Upon request from a management station, the ASC shall store the Block Object reference parameters needed to configure the general configuration parameters for the CV Interface from a management station to the ASC.

#### 3.5.2.1.14.1.1.48 Configure Block Object Get Control—Connected Vehicle RSU Port Configuration Data

Upon request from a management station, the ASC shall store the Block Object reference parameters needed to configure the RSU Port Configuration parameters for the CV Interface from a management station to the ASC.

#### 3.5.2.1.14.1.1.49 Configure Block Object Get Control—SPaT Lanes Concurrency Data

Upon request from a management station, the ASC shall store the Block Object reference parameters needed to configure the Signal Phase and Timing (SPaT) SPaT Lanes Concurrency data for the CV Interface from a management station to the ASC.

#### 3.5.2.1.14.1.1.50 Configure Block Object Get Control—Connected Vehicle SPaT RSU Port Configuration Data

Upon request from a management station, the ASC shall store the Block Object reference parameters needed to configure the SPaT RSU Port Configuration parameters for the CV Interface from a management station to the ASC.

#### 3.5.2.1.14.1.1.51 Configure Block Object Get Control—Connected Vehicle Detector Configuration Data [Deprecated]

Upon request from a management station, the ASC shall store the Block Object reference parameters needed to configure the Detector Configuration parameters for the CV Interface from a management station to the ASC.

#### 3.5.2.1.14.1.1.52 Configure Block Object Get Control—Connected Vehicle Detection Zone Configuration Data [Deprecated]

Upon request from a management station, the ASC shall store the Block Object reference parameters needed to configure the Detection Zone Configuration parameters for the CV Interface from a management station to the ASC.

© 2023 AASHTO / ITE / NEMA Do Not Copy Without Written Permission

#### 3.5.2.1.14.1.1.53 Configure Block Object Get Control—Connected Vehicle Detection Report Data

Upon request from a management station, the ASC shall store the Block Object reference parameters needed to configure the Detection Report parameters for the CV Interface from a management station to the ASC.

#### 3.5.2.1.14.1.1.54 Configure Block Object Get Control—Additional Pattern Data

Upon request from a management station, the ASC shall store the Block Object reference parameters needed to configure the additional pattern configuration data that were added in Version 03 but also removes data deprecated in Version 03B of this standard.

#### 3.5.2.1.14.1.1.55 Configure Block Object Get Control—Connected Vehicle Configuration 2 Data

Upon request from a management station, the ASC shall store the Block Object reference parameters needed to configure the general configuration parameters for the CV Interface from a management station to the ASC.

### 3.5.2.1.14.1.2 Configure Block Data

Upon request from a management station, the ASC shall store the Block Object parameters using a database management method (dbCreateTransaction). The ASC checks the values of the reference parameters for validity and returns a Block Object-specific error status indicating the error causing the reference parameter configuration to fail.

## 3.5.2.1.14.2 Retrieve Block Object Requirements

The requirements to configure the Block Objects within the ASC follow.

### 3.5.2.1.14.2.1 Monitor Block Object Get Control

Upon request from a management station, the ASC shall return the Block Object reference parameters.

### 3.5.2.1.14.2.2 Monitor Block Data

Upon request from a management station, the ASC shall return the Block Object parameters.

### 3.5.2.1.14.2.3 Monitor Block Error Status Requirements

The requirements to return the ASC-specific block object errors within the ASC follow.

#### 3.5.2.1.14.2.3.1 Monitor Block Error Status—Set/Get Command Attempt

When a SET or GET request from a management station and not the database management approach (dbCreateTransaction) is received, the ASC shall generate a general error as defined in NTCIP 1103, Section 4.2.2.

#### 3.5.2.1.14.2.3.2 Monitor Block Error Status—Configuration Validity Check Error

When a SET request from a management station is received that contains errors in the configuration of a block object, the ASC shall generate a general error as defined in NTCIP 1103, Section 4.2.2.

Do Not Copy Without Written Permission © 2023 AASHTO / ITE / NEMA

#### 3.5.2.1.14.2.3.3 Monitor Block Error Status—Value Set Validity Check Error

When a SET request from a management station using the STMP protocol is received that contains invalid and/or values not supported by the ASC, the ASC shall generate a general error as defined in NTCIP 1103, Section 4.2.2.

#### 3.5.2.1.14.2.3.4 Monitor Block Error Status—Error-Causing Data Element

When a SET request from a management station is received that contains invalid values and/or values not supported by the ASC, the ASC shall return the identification of the data element that caused the error.

### 3.5.2.2 Monitor Signal Operations Requirements

The requirements to monitor signal operations within the ASC follow.

#### 3.5.2.2.1 Determine Controller Health Requirements

The requirements to determine the ASC's health status follow.

#### 3.5.2.2.1.1 Determine Alarm Status Requirements

The requirements to determine the status of an alarm within the ASC follow.

#### 3.5.2.2.1.1.1 Monitor Preempt Active

Upon request from a management station, the ASC shall return an alarm value when any of the preemption inputs become active.

#### 3.5.2.2.1.1.2 Monitor Terminal and Facilities Flash

Upon request from a management station, the ASC shall return an alarm value when either the Local Flash or the Signal Monitoring Unit Flash input becomes active.

#### 3.5.2.2.1.1.3 Monitor Local Cycle Zero Alarm

Upon request from a management station, the ASC shall return an alarm value when the ASC is in coordination mode and the currently active timing plan/pattern has passed through zero. The ASC does not clear this alarm value until the alarm is read by the management station.

#### 3.5.2.2.1.1.4 Monitor Local Override

Upon request from a management station, the ASC shall return an alarm value when any external input or ASC programming has prevented the device from responding to a system pattern command.

#### 3.5.2.2.1.1.5 Monitor Coordination Alarm

Upon request from a management station, the ASC shall return an alarm value when the ASC is not running the called pattern without offset correction within a user-specified number of cycles from receiving the command (default = three cycles). The ASC does not cause an alarm to be set, if an offset correction requires less than the user-specified number of cycles (default = three) due to cycle overrun caused by servicing a pedestrian call.

© 2023 AASHTO / ITE / NEMA Do Not Copy Without Written Permission

#### 3.5.2.2.1.1.6 Monitor Detector Fault

Upon request from a management station, the ASC shall return an alarm value when a detector alarm fault occurs.

#### 3.5.2.2.1.1.7 Monitor Non-Critical Alarm

Upon request from a management station, the ASC shall return an alarm value when a physical alarm input is active.

#### 3.5.2.2.1.1.8 Monitor Stop Time Input Alarm

Upon request from a management station, the ASC shall return an alarm value when the stop time input is active.

#### 3.5.2.2.1.1.9 Monitor Cycle Fault Alarm

Upon request from a management station, the ASC shall return an alarm value when the ASC is operating in the coordinated mode and cycling diagnostics indicate that a serviceable call exists that has not been serviced for two cycles.

#### 3.5.2.2.1.1.10 Monitor Coordination Fault

Upon request from a management station, the ASC shall return an alarm value when a cycle fault is in effect and the serviceable call has been serviced within two cycles after the cycle fault.

#### 3.5.2.2.1.1.11 Monitor Coordination Fail Alarm

Upon request from a management station, the ASC shall return an alarm value when a Coordination Fault is in effect and a Cycle Fault occurs again within two cycles of the coordination retry.

#### 3.5.2.2.1.1.12 Monitor Cycle Fail Alarm

Upon request from a management station, the ASC shall return an alarm value when the ASC is operating in non-coordinated mode as the result of either a Cycle Fault or the ASC operating in Free mode, and cycling diagnostics indicate that a serviceable call exists that has not been serviced for two cycles.

#### 3.5.2.2.1.1.13 Monitor SMU Flash Alarm

Upon request from a management station, the ASC shall return an alarm value when the Signal Monitoring Unit (e.g., Malfunction Management Unit) flash remains active for a period of time exceeding the Start-Up Flash time.

#### 3.5.2.2.1.1.14 Monitor Local Flash Alarm

Upon request from a management station, the ASC shall return an alarm value when the local flash input becomes active, while the Malfunction Management Unit Flash input is not active and the Flash mode was not commanded.

#### 3.5.2.2.1.1.15 Monitor Local Free Alarm

Upon request from a management station, the ASC shall return an alarm value when any of the ASC's inputs and/or programming cause the ASC not to run coordination.

Do Not Copy Without Written Permission © 2023 AASHTO / ITE / NEMA

#### 3.5.2.2.1.1.16 Monitor Coordination Active Alarm

Upon request from a management station, the ASC shall return an alarm value when coordination is active and not preempted or overridden.

#### 3.5.2.2.1.1.17 Monitor Power Restart Alarm

Upon request from a management station, the ASC shall return an alarm when power returns after a power interruption. When enabled, the ASC does not clear this alarm until the alarm has been returned.

#### 3.5.2.2.1.1.18 Monitor Low Battery Alarm

Upon request from a management station, the ASC shall return an alarm value when any internal standby voltage drops below sustainable levels.

#### 3.5.2.2.1.1.19 Monitor Response Fault Alarm

Upon request from a management station, the ASC shall return an alarm value when a NEMA TS2 Port 1 or Serial Bus 1 monitor response frame fault occurs.

#### 3.5.2.2.1.1.20 Monitor External Start

Upon request from a management station, the ASC shall return an alarm when the Controller Unit External Start becomes active.

#### 3.5.2.2.1.1.21 Monitor Stop Time Alarm

Upon request from a management station, the ASC shall return an alarm value when the Controller Unit Stop Time input becomes active.

#### 3.5.2.2.1.1.22 Monitor Offset Transitioning Alarm

Upon request from a management station, the ASC shall return an alarm value when the Controller Unit is performing an offset transition.

#### 3.5.2.2.1.1.23 Monitor Stall Condition

Upon request from a management station, the ASC shall return if the ASC detects a stall condition based on any “critical” watchdog timer. A watchdog timer is regularly restarted by a process or service. A stall condition for a watchdog timer occurs when the watchdog timer is not restarted by the process or service after an elapsed period of time (“times out”). A “critical” watchdog timer is a watchdog timer where a stall condition on that process or service may jeopardize the continued, safe operation of the ASC. An ASC may have one or more "critical" watchdog timers within the ASC, one for the main program and perhaps for each process or service deemed "critical" for the ASC, as determined by the ASC vendor and/or the agency operating the ASC.

#### 3.5.2.2.1.1.24 Monitor Memory Fault

Upon request from a management station, the ASC shall return if the ASC detects a memory fault. Memory faults include faults of the firmware, database, and RAM, including flash and static RAM. Faults are detected by the ASC automatically and regularly (1024 bytes per second for ROM and Non-Volatile Memory according to NEMA TS 2). Faults are normally detected by comparing the automatic memory test result checksum with a pre-programmed checksum value.

© 2023 AASHTO / ITE / NEMA Do Not Copy Without Written Permission

#### 3.5.2.2.1.1.25 Monitor Process Failure

Upon request from a management station, the ASC shall return if the ASC detects a process (task) failure.

#### 3.5.2.2.1.1.26 Monitor Communications Timeout

Upon request from a management station, the ASC shall return if the ASC detects a communications timeout on an enabled communications port on the ASC. This is different than the backup timer in that the communications port timer is a communications layer function, while the backup timer is an ASC application timer. See Sections 3.5.1.2.3.1 and 3.5.1.2.3.2 for requirements to monitor communications timeouts for a specific communications port.

#### 3.5.2.2.1.1.27 Monitor Power Problems

Upon request from a management station, the ASC shall return if the ASC detects power problems such as brown-outs or brief blackouts (very short power failures), which do not lead to a shutdown of the ASC (complete power failures would lead to a restart of the ASC).

#### 3.5.2.2.1.1.28 Monitor UPS Errors

Upon request from a management station, the ASC shall return if the communications link between the ASC and the UPS unit is failed (assuming that the ASC is configured to communicate with the UPS via an NTCIP-compliant interface), or if the UPS battery sends battery-specific alarms such as BatteryBad, BatteryLow, BatteryDepleted, or TemperatureBad (out of tolerance) to the ASC.

#### 3.5.2.2.1.1.29 Monitor Scheduler Errors

An ASC shall return if the ASC is not implementing its scheduled pattern or scheduled action.

#### 3.5.2.2.1.1.30 Monitor Signal Monitor Communications Error

Upon request from a management station, the ASC shall return if the ASC is configured to communicate with the MMU and the communications link is failed.

#### 3.5.2.2.1.1.31 Monitor Signal Monitor Unit Presence

Upon request from a management station, the ASC shall return if an MMU is removed from the cabinet.

#### 3.5.2.2.1.1.32 Monitor USB Memory Device

Upon request from a management station, the ASC shall return if a USB memory device is present on the USB port of the ASC.

#### 3.5.2.2.1.1.33 Monitor ASC Cabinet Temperature Alarm

Upon request from a management station, the ASC shall return if the current temperature measured in the ASC Cabinet exceeds the temperature thresholds.

#### 3.5.2.2.1.1.34 Monitor ASC Cabinet Humidity Alarm

Upon request from a management station, the ASC shall return if the current humidity measured in the ASC cabinet exceeds the humidity threshold.

Do Not Copy Without Written Permission © 2023 AASHTO / ITE / NEMA

#### 3.5.2.2.1.1.35 Monitor Clock Failure

Upon request from a management station, the ASC shall return an alarm value when an error is detected with the ASC's internal clock.

#### 3.5.2.2.1.1.36 Monitor Preempt Maximum Presence Alarm

Upon request from a management station, the ASC shall return if the preempt maximum presence timer has been exceeded. This fault indicates that a preempt call has remained active for a time period greater than the maximum time configured.

#### 3.5.2.2.1.1.37 Monitor RSU Watchdog Timer

Upon request from a management station, the ASC shall return if any RSU watchdog no activity timer fault is detected. This fault indicates that no activity has been detected across any the RSU interface for a period longer than a stored threshold.

#### 3.5.2.2.1.1.38 Monitor CV Certificate Faults

Upon request from a management station, the ASC shall return if faults pertaining to invalid CV certificates have been detected.

#### 3.5.2.2.1.2 Monitor Alarm Group State

Upon request from a management station, the ASC shall return if a physical alarm input is active.

### 3.5.2.2.2 Retrieve Mode of Operation Requirements

The requirements to determine the ASC's mode of operations within the ASC follow.

#### 3.5.2.2.2.1 Monitor Unit Control Status

Upon request from a management station, the ASC shall return the control mode for the ASC. Valid ASC unit control states are:

a) System Control—The ASC is controlled by master or central commands.
b) System Standby—The ASC is controlled locally based on master or central command to use local control.
c) Backup Mode—The ASC is in backup mode.
d) Manual—The ASC is controlled by a manual selection of a timing pattern, manual free or manual flash.
e) Timebase—The ASC is controlled by the local time base.
f) Interconnect—The ASC is controlled by the local interconnect inputs.
g) Interconnect Backup—The ASC is controlled by the local TBC due to invalid Interconnect inputs or loss of sync.
h) Other—The ASC is controlled by a source not specified by the standard.
i) Police Panel Control—The ASC is controlled via the police panel.
j) System Control Remote Advance Control—The ASC is controlled by central command by issuing Holds on a Green Rest point in each phase or interval and then issues a Remote Advance Control command to advance to the next phase or interval.
k) Manual Control—The ASC is controlled by manual advances issued by central to the next interval.

© 2023 AASHTO / ITE / NEMA Do Not Copy Without Written Permission

#### 3.5.2.2.2.2 Monitor External Minimum Recall

Upon request from a management station, the ASC shall return if a recurring demand exists on all phases for minimum vehicle service.

#### 3.5.2.2.2.3 Monitor Call to Non-Actuated 1

Upon request from a management station, the ASC shall return if any phases, whose phase-related options are appropriately programmed, operate in the Non-Actuated mode.

#### 3.5.2.2.2.4 Monitor Call to Non-Actuated 2

Upon request from a management station, the ASC shall return if any phases, whose phase-related options are appropriately programmed, operate in the Non-Actuated mode.

#### 3.5.2.2.2.5 Monitor Walk Rest Modifier

Upon request from a management station, the ASC shall return if any non-actuated phases remain in the timed-out Walk state (Rest in Walk) in the absence of a serviceable conflicting call.

#### 3.5.2.2.2.6 Monitor Interconnect

Upon request from a management station, the ASC shall return if the interconnect inputs operate at a higher priority than the timebase control.

#### 3.5.2.2.2.7 Monitor Dimming Enabled

Upon request from a management station, the ASC shall return if channel dimming operates as configured. Dimming only occurs if this value or a dimming input is enabled and simultaneously an auxiliary function is defined in the timebased scheduler.

#### 3.5.2.2.2.8 Monitor Unit Flash Status

Upon request from a management station, the ASC shall return its flash status. Valid flash states are:

a) Not in flash state
b) An automatic flash state
c) Local flash input is active, SMU Flash is not active, and Flash is not commanded by the central system
d) Fault monitor state
e) SMU flash input is active
f) Startup flash input is active
g) Timing the preempt flash
h) Flash for a reason not specified by the standard

Only one flash status can be active at a time.

#### 3.5.2.2.2.9 Monitor Current Timing Pattern Requirements

The requirements to monitor the ASC's current timing pattern follow.

##### 3.5.2.2.2.9.1 Monitor Current Pattern Status

Upon request from a management station, the ASC shall return the coordination pattern or mode currently operating in the ASC.

 © 2023 AASHTO / ITE / NEMA

a) A value from 1 to 253 indicates the number of the current pattern and that the device is operating in Coordination mode.
b) A value of 254 indicates that the device is operating in Free mode.
c) A value of 255 indicates that the device is operating in Flash mode.

#### 3.5.2.2.2.9.2 Monitor Local Free Status

Upon request from a management station, the ASC shall return one of the following states that led to the ASC operating in local free mode.

a) The ASC is not running in Free mode.
b) The ASC has been commanded to Free mode.
c) The ASC has been commanded to Free mode but is cycling to a point to begin coordination.
d) The ASC is not responding to coordination due to one of the ASC inputs.
e) The ASC programming for the called pattern is to operate in Free mode.
f) The ASC is running in Free mode because the called pattern is invalid.
g) The ASC is running in Free mode because the pattern cycle time is less than the amount of time needed to serve the minimum requirements of all phases.
h) The ASC is running in Free mode because the sum of the split times is greater than the pattern cycle time.
i) The ASC is running in Free mode because of an invalid offset. This value is reserved/not used.
j) The ASC is running in Free mode due to a request by the ASC's internal cycling diagnostics.
k) Other. Some other condition has caused the ASC to run in free mode.

The ASC can report only one state at a time.

#### 3.5.2.2.2.9.3 Monitor Current Mode of Operation

Upon request from a management station, the ASC shall return the mode of operation in effect. Modes of operation include normal, manual, preempt, priority, traffic adaptive, traffic responsive, free actuated, and fault.

#### 3.5.2.2.2.9.4 Monitor Programmed Pattern

Upon request from a management station, the ASC shall return the pattern number that the ASC has been programmed for. The ASC transitions to the programmed pattern at the next transition point. A value from 1 to 253 indicates the number of the programmed pattern and that the ASC is to operate in Coordination mode. A value of 254 indicates that the ASC is to operate in Free mode. A value of 255 indicates that the ASC is to operate in Flash mode. The programmed pattern allows a management station to determine what pattern is to be in effect in the ASC at the next transition point, assuming that the pattern is not overridden by a higher priority command or event.

### 3.5.2.2.2.10 Monitor Current Cycle Requirements

The requirements to monitor the current cycle information follow.

#### 3.5.2.2.2.10.1 Monitor Coordination Cycle Status

Upon request from a management station, the ASC shall return the current position in the local coordination cycle of the running pattern in seconds, from 0 to 2x the maximum cycle length, in seconds. This value counts down from the current pattern's cycle time to zero. This value may be greater than the current pattern's cycle time during a coordination cycle with offset correction by the amount of the correction.

© 2023 AASHTO / ITE / NEMA Do Not Copy Without Written Permission

#### 3.5.2.2.2.10.2 Monitor Coordination Synchronization Status

Upon request from a management station, the ASC shall return the time since the system reference point for the running pattern in seconds, from 0 to 2x the maximum cycle length, in seconds. This value counts from zero to current pattern's cycle time. This value may exceed the current pattern's cycle time if the system reference point has changed.

#### 3.5.2.2.2.10.3 Monitor Current Split

Upon request from a management station, the ASC shall return the time into the current phase, in seconds, of the current cycle in effect.

Upon request from a management station, the ASC shall return the duration of the current phase, in seconds, of the current cycle in effect.

#### 3.5.2.2.2.10.4 Monitor Current Offset

Upon request from a management station, the ASC shall return the pre-timed offset currently in effect.

### 3.5.2.2.3 Monitor Current Signal Indications Requirements

The requirements to monitor the phase indications (organized as phase groups) within the ASC follow.

#### 3.5.2.2.3.1 Determine Maximum Number of Phase Groups

Upon request from a management station, the ASC shall return the maximum number of phase groups supported by the device. Each phase group contains 8 unique phases, for example, phase group 1 contains phases 1-8, while phase group 2 contains phases 9-16.

#### 3.5.2.2.3.2 Monitor Phase Group Reds

Upon request from a management station, the ASC shall return for each phase defined in a phase group, if the corresponding Red indication for a phase is currently active.

#### 3.5.2.2.3.3 Monitor Phase Group Yellows

Upon request from a management station, the ASC shall return for each phase defined in a phase group, if the corresponding Yellow indication for a phase is currently active.

#### 3.5.2.2.3.4 Monitor Phase Group Greens

Upon request from a management station, the ASC shall return for each phase defined in a phase group, if the corresponding Green indication for a phase is currently active.

#### 3.5.2.2.3.5 Monitor Phase Group Don't Walks

Upon request from a management station, the ASC shall return for each phase defined in a phase group, if the corresponding Don't Walk indication for a phase is currently active.

#### 3.5.2.2.3.6 Monitor Phase Group Pedestrian Clearance

Upon request from a management station, the ASC shall return for each phase defined in a phase group, if the corresponding Pedestrian Clearance indication for a phase is currently active.

Do Not Copy Without Written Permission © 2023 AASHTO / ITE / NEMA

#### 3.5.2.2.3.7 Monitor Phase Group Walks

Upon request from a management station, the ASC shall return for each phase defined in a phase group, if the corresponding Walk indication for a phase is currently active.

#### 3.5.2.2.3.8 Monitor Phase Group Flashing Yellow Arrow

Upon request from a management station, the ASC shall return for each phase defined in a phase group, if the corresponding Flashing Yellow Arrow indication for a phase is currently active.

#### 3.5.2.2.3.9 Monitor Phase Group Flashing Red Arrow

Upon request from a management station, the ASC shall return for each phase defined in a phase group, if the corresponding Flashing Red Arrow indication for a phase is currently active.

### 3.5.2.2.4 Monitor Current Phase Requirements

The requirements to monitor the phase indications within the ASC follow.

#### 3.5.2.2.4.1 Monitor Phase Group Phase Ons

Upon request from a management station, the ASC shall return for each phase if a phase is currently active. A phase is active during the Green, Yellow, Red Clearance, Walk, and Pedestrian Clearance Intervals for the given phase.

#### 3.5.2.2.4.2 Monitor Phase Group Phase Nexts

Upon request from a management station, the ASC shall return for each phase if a phase is currently committed to be active next (after the current Phase On terminates). The ASC determines the next phase to be serviced at the end of the Green interval of the terminating phase, if possible. If the next phase to be serviced cannot be determined at the end of the Green interval, the ASC makes the determination after the end of all vehicle change and clearance intervals.

#### 3.5.2.2.4.3 Monitor Phase Group Vehicle Call

Upon request from a management station, the ASC shall return for each phase defined in a phase group, if a vehicle detector call is active for a phase.

#### 3.5.2.2.4.4 Monitor Phase Group Pedestrian Call

Upon request from a management station, the ASC shall return for each phase defined in a phase group, if a pedestrian call is active for a phase.

#### 3.5.2.2.4.5 Monitor Phase Group Bicycle Call

Upon request from a management station, the ASC shall return for each phase defined in a phase group, if a bicycle call is active for a phase.

#### 3.5.2.2.4.6 Monitor Phase Group Transit Call

Upon request from a management station, the ASC shall return for each phase defined in a phase group, if a transit call is active for a phase.

### 3.5.2.2.5 Retrieve Current Ring Requirements

The requirements to monitor the ring control status within the ASC follow.

© 2023 AASHTO / ITE / NEMA Do Not Copy Without Written Permission

#### 3.5.2.2.5.1 Monitor Ring Status

Upon request from a management station, the ASC shall return all of the current status indications, which are valid at the time this request was issued, for each configured ring. Valid ring states are:

a) Minimum Green
b) Extension
c) Maximum
d) Green Rest
e) Yellow Change
f) Red Clearance
g) Red Rest
h) Queue Jump
i) Flashing Yellow Arrow
j) Flashing Red Arrow
k) Leading / Early ped Walk
l) Delayed ped Walk
m) Ped Minimum Walk
n) Ped Walk outside of Min Walk
o) Ped Clearance / Flash Don't Walk
p) Ped Don't Walk
q) Bicycle Minimum Green
r) Bicycle Green
s) Bicycle Yellow
t) Bicycle Red
u) Transit Minimum Green
v) Transit Green
w) Transit Yellow
x) Transit Red
y) Waiting for negative Overlap to end
z) Waiting for Overlap to end
aa) Undefined

#### 3.5.2.2.5.2 Monitor Ring Termination Cause

Upon request from a management station, the ASC shall return if the active phase in the ring was terminated by force off, maximum green time out, or vehicle detection gap out.

### 3.5.2.2.6 Retrieve Current Channel Status Requirements

The requirements to retrieve the current status of the channels (organized as channel status groups) within the ASC follow.

#### 3.5.2.2.6.1 Determine Maximum Number of Channel Status Groups

Upon request from a management station, the ASC shall return the maximum number of channel status groups supported by the device. Each channel status group contains 8 unique channels, for example, channel status group 1 contains channels 1-8, while channel status group 2 contains channels 9-16.

#### 3.5.2.2.6.2 Monitor Channel Status Group Reds

Upon request from a management station, the ASC shall return for each channel defined in a channel status group, if the corresponding Red indication for a channel is currently active.

Do Not Copy Without Written Permission © 2023 AASHTO / ITE / NEMA

#### 3.5.2.2.6.3 Monitor Channel Status Group Yellows

Upon request from a management station, the ASC shall return for each channel defined in a channel status group, if the corresponding Yellow indication for a channel is currently active.

#### 3.5.2.2.6.4 Monitor Channel Status Group Greens

Upon request from a management station, the ASC shall return for each channel defined in a channel status group, if the corresponding Green indication for a channel is currently active.

### 3.5.2.2.7 Retrieve Current Overlap Status Requirements

The requirements to retrieve the current status of the overlaps (organized as overlap status groups) within the ASC follow.

#### 3.5.2.2.7.1 Determine Maximum Number of Overlap Status Groups

Upon request from a management station, the ASC shall return the maximum number of overlap status groups supported by the device. Each overlap status group contains 8 unique overlaps, for example, overlap status group 1 contains overlap 1-8, while overlap status group 2 contains overlap 9-16.

#### 3.5.2.2.7.2 Monitor Overlap Status Group Reds

Upon request from a management station, the ASC shall return for each overlap defined in an overlap status group, if the corresponding Red indication for an overlap is currently active.

#### 3.5.2.2.7.3 Monitor Overlap Status Group Yellows

Upon request from a management station, the ASC shall return for each overlap defined in an overlap status group, if the corresponding Yellow indication for an overlap is currently active.

#### 3.5.2.2.7.4 Monitor Overlap Status Group Greens

Upon request from a management station, the ASC shall return for each overlap defined in an overlap status group, if the corresponding Green indication for an overlap is currently active.

#### 3.5.2.2.7.5 Monitor Overlap Status Group Flashing Yellow Arrows

Upon request from a management station, the ASC shall return for each overlap defined in an overlap status group, if the corresponding Flashing Yellow Arrow indication for an overlap is currently active.

#### 3.5.2.2.7.6 Monitor Overlap Status Group Flashing Red Arrows

Upon request from a management station, the ASC shall return for each overlap defined in an overlap status group, if the corresponding Flashing Red Arrow indication for an overlap is currently active.

### 3.5.2.2.8 Retrieve Current Preempt Status Requirements

The requirements to retrieve the current status of the preempts within the ASC follow.

#### 3.5.2.2.8.1 Monitor Currently Active Preempt

Upon request from a management station, the ASC shall return the identifier of the preempts that are currently being serviced, if any.

© 2023 AASHTO / ITE / NEMA Do Not Copy Without Written Permission

#### 3.5.2.2.8.2 Monitor Current Preempt Inputs

Upon request from a management station, the ASC shall return the input state for each preempt input (organized as preempt status groups) configured in the ASC. Valid input states include:

a) no preempt input signal detected
b) preempt input signal is detected
c) other—preempt input signal and service is in a state not defined by NTCIP 1202 v03

#### 3.5.2.2.8.3 Monitor Current Preempt State

Upon request from a management station, the ASC shall return the preempt status of the current active preempt. Valid preempt states are:

a) Not Active—The preemption input is not active, and this preemption is not active.
b) Not Active With Call—The preemption input is active, but the preemption service has not initiated (Delay Interval or higher preempt service). This state is mutually exclusive to the 'Advanced Preemption' status.
c) Advanced Preemption—The preemption service is timing the advanced preemption time. This state is mutually exclusive to the 'Not Active With Call' status.
d) Entry Started—The preemption service is timing the entry intervals.
e) Track Service—The preemption service is timing the track clearance intervals.
f) Dwell—The preemption service is timing the dwell intervals.
g) Link Active—The preemption service is performing the linked operation.
h) Exit Strategy in Effect—The preemption service is timing the exit strategy.
i) Maximum Presence—The preempt input has exceeded the preempt's maximum presence time.
j) Other—Preempt service is not specified in NTCIP 1202 v03.

Each preempt input can be only in one state at a time.

#### 3.5.2.2.8.4 Monitor Current Gate Status

Upon request from a management station, the ASC shall return whether each of the gates is fully lowered.

### 3.5.2.2.9 Retrieve Special Function Outputs Requirements

The requirements to retrieve the special functions within the ASC follow.

#### 3.5.2.2.9.1 Determine Maximum Number of Special Functions

Upon request from a management station, the ASC shall return the maximum number of special functions, as a number from 1 to 255 that can be configured in the ASC.

#### 3.5.2.2.9.2 Monitor Special Function State

Note: This function was deprecated in NTCIP 1202 v02.

#### 3.5.2.2.9.3 Monitor Special Function Status

Upon request from a management station, the ASC shall return an indication whether a special function, regardless if it is a physical or logical function, is on or off.

Do Not Copy Without Written Permission © 2023 AASHTO / ITE / NEMA

#### 3.5.2.2.9.4 Monitor Special Function Control Source

Upon request from a management station, the ASC shall return the source that activated a special function, regardless if it is a physical or logical function. Valid Values are:

a) Remote—The management station activated the special function.
b) Timebased—The Action Scheduler activated the special function.
c) Front Panel—The special function was activated via the front panel.

### 3.5.2.2.10 Monitor Timebase Action Status Requirements

The requirements to monitor the timebased scheduler operations within the ASC follow.

#### 3.5.2.2.10.1 Monitor Timebase Action Status

Upon request from a management station, the ASC shall return the timebase action that is to be applied at a particular time and day/date, when the ASC is in timebased scheduler operation. A value of zero indicates that no time base action is active at the requested return time.

#### 3.5.2.2.10.2 Monitor Timebase Timing Pattern Status

Upon request from a management station, the ASC shall return the timebase timing pattern that is to be applied at a particular time and day/date, when the ASC is in timebased scheduler operation. A value of zero indicates that no time base action is active at the requested return time.

### 3.5.2.2.11 Monitor Intra-Cabinet Communications Requirements

The requirements to monitor the intra-cabinet communications within the ASC follow.

#### 3.5.2.2.11.1 Monitor TS2 Port 1 Status

Upon request from a management station, the ASC shall return the communications status with the device on a TS2 Port 1 address. Valid TS2 Port 1 States are:

a) Online—Indicates that at least five of the most recent 10 response transfers were received correctly.
b) Response Fault—Indicates that more than five of the most recent 10 response transfers were received incorrectly.
c) Other—Indicates a state not defined by this standard.

#### 3.5.2.2.11.2 Monitor TS2 Port 1 Fault Frame

Upon request from a management station, the ASC shall return the frame number that caused the most recent fault for a TS2 Port 1 address.

#### 3.5.2.2.11.3 Monitor Serial Bus 1 Status

Upon request from a management station, the ASC shall return the communications status with the device on a Serial Bus 1 address. Valid Serial Bus 1 States are:

a) Online—Indicates that at least five of the most recent 10 response transfers were received correctly.
b) Response Fault—Indicates that more than five of the most recent 10 response transfers were received incorrectly.
c) Other—Indicates a state not defined by this standard.

© 2023 AASHTO / ITE / NEMA Do Not Copy Without Written Permission

#### 3.5.2.3 Manage Signal Operations Control Requirements

The requirements to manage the control of the signal operations within the ASC follow.

##### 3.5.2.3.1 Control ASC Function Requirements

The requirements to activate functions within the ASC follow.

###### 3.5.2.3.1.1 Control External Minimum Recall

Upon request from a management station, the ASC shall return if a recurring demand exists on all phases for minimum vehicle service.

###### 3.5.2.3.1.2 Control Call to Non-Actuated 1

Upon request from a management station, the ASC shall return if any phases whose phase-related options are appropriately programmed operate in the Non-Actuated mode.

###### 3.5.2.3.1.3 Control Call to Non-Actuated 2

Upon request from a management station, the ASC shall return if any phases whose phase-related options are appropriately programmed operate in the Non-Actuated mode.

###### 3.5.2.3.1.4 Control Walk Rest Modifier

Upon request from a management station, the ASC shall store if any non-actuated phases remain in the timed-out Walk state (Rest in Walk) in the absence of a serviceable conflicting call.

###### 3.5.2.3.1.5 Control Interconnect

Upon request from a management station, the ASC shall store if the interconnect inputs operate at a higher priority than the timebase control.

###### 3.5.2.3.1.6 Control Dimming Enabled

Upon request from a management station, the ASC shall store if channel dimming operates as configured. Dimming only occurs if this value or a dimming input is enabled and simultaneously an auxiliary function is defined in the time-based scheduler.

###### 3.5.2.3.1.7 Control Disable Remote Commands

Upon request from a management station, the ASC shall store if the ASC may not accept remote commands from a master or from central. This requirement allows a maintenance worker at the ASC cabinet to perform maintenance without interference from a management station.

###### 3.5.2.3.1.8 Acknowledge Local Cycle Zero Alarm

Upon request from a management station, the ASC shall return the alarm value for passing the Local Cycle Zero point. If the alarm value is on (enabled), then upon returning the alarm value, the ASC shall reset the alarm value to off.

###### 3.5.2.3.1.9 Control Weather-Based Signal Operation Changes

Upon request from a management station, the ASC shall enable or disable changes to the signal operations due to weather changes. This requirement allows a management station to initiate changes

Do Not Copy Without Written Permission © 2023 AASHTO / ITE / NEMA

such as the use of timing patterns specifically designed to address the weather-related needed changes such as longer Green / Walk times.

#### 3.5.2.3.2 Command Timing Pattern Requirements

##### 3.5.2.3.2.1 Command System Timing Pattern

Upon request from a management station, the ASC shall allow a management station to select the coordinated timing pattern or operational mode for the ASC. Valid patterns/modes that can be commanded are:

a) Standby—Allows the ASC to select the pattern or mode based on the local timebase schedule or interconnect inputs.
b) Pattern Number—Commands the ASC to a specific timing pattern. Timing patterns are identified by an identifier from 1 to 253.
c) Free—Commands the ASC to operate in free mode without coordination.
d) Flash—Commands the ASC to operate in automatic flash.

##### 3.5.2.3.2.2 Command System Timing Pattern System Reference Point

Upon request from a management station, the ASC shall store the System Reference Point for the Called System Pattern by defining a point in the System Pattern Cycle in seconds, from 0 to 254 seconds. This System Reference Point is established to the next System Reference Point. If the System Reference Point is set to 255, the ASC references the system reference point to the local time base.

#### 3.5.2.3.3 Control Phases Requirements

The requirements to control the phases within the ASC follow.

##### 3.5.2.3.3.1 Control Phase Group Phase Omits

Upon request from a management station, the ASC shall store for each phase if the corresponding phase is currently prevented from being active. The ASC removes the omit command for all phases if the ASC is placed into backup mode. If a phase is omitted remotely, the ASC resets the backup timer to zero seconds.

##### 3.5.2.3.3.2 Control Phase Group Pedestrian Omits

Upon request from a management station, the ASC shall store for each phase if the corresponding pedestrian movement is currently prevented from being active. The ASC removes the omit command for all pedestrian movements in the control group, if the ASC is placed into backup mode. If a pedestrian movement is omitted remotely, the ASC resets the backup timer to zero seconds.

##### 3.5.2.3.3.3 Control Phase Group Holds

Upon request from a management station, the ASC shall store for each phase if the corresponding phase is currently put into a hold state. The ASC removes the phase hold command for all phases if the ASC is placed into backup mode. If a phase is put into hold state remotely, the ASC resets the backup timer to zero seconds.

##### 3.5.2.3.3.4 Control Phase Group Force Offs

Upon request from a management station, the ASC shall store for each phase defined if the corresponding phase is remotely instructed to terminate the phase (Force off). The ASC removes the phase force off command for all phases if the ASC is placed into backup mode. If a phase is forced off remotely, the ASC resets the backup timer to zero seconds.

© 2023 AASHTO / ITE / NEMA Do Not Copy Without Written Permission

#### 3.5.2.3.3.5 Control Phase Group Vehicle Calls

Upon request from a management station, the ASC shall store for each phase defined if a vehicle call for the corresponding phase has been placed remotely. The ASC removes the phase vehicle call command for all phases if the ASC is placed into backup mode. If a vehicle call for a phase is placed remotely, the ASC resets the backup timer to zero seconds.

#### 3.5.2.3.3.6 Control Phase Group Pedestrian Calls

Upon request from a management station, the ASC shall store for each phase defined if a pedestrian call for the corresponding phase has been placed remotely. The ASC removes the phase pedestrian call command for all phases if the ASC is placed into backup mode. If a pedestrian call for a phase is placed remotely, the ASC resets the backup timer to zero seconds.

#### 3.5.2.3.3.7 Control Phase Group Bicycle Calls

Upon request from a management station, the ASC shall store for each phase defined if a bicycle call for the corresponding phase has been placed remotely. The ASC removes the phase bicycle call command for all phases if the ASC is placed into backup mode. If a bicycle call for a phase is placed remotely, the ASC reset the backup timer to zero seconds.

#### 3.5.2.3.3.8 Control Phase Group Transit Calls

Upon request from a management station, the ASC shall store for each phase defined if a transit call for the corresponding phase has been placed remotely. The ASC removes the phase transit call command for all phases if the ASC is placed into backup mode. If a transit call for a phase is placed remotely, the ASC resets the backup timer to zero seconds.

### 3.5.2.3.4 Control Preempt Requirements

The requirements to control the preemptions within the ASC follow.

#### 3.5.2.3.4.1 Command Preempt Remote Activation

Upon request from a management station, the ASC shall allow a management station to manually activate a preempt. If the preemption action has already been started by a preemption input, the ASC keeps that already-started preemption action. The ASC remains in preemption until it completes the preemption sequence or until the management station removes the preempt.

The ASC resets the preempt control state to zero when the ASC goes into Backup Mode. If the ASC is commanded to change the preempt control state remotely, the ASC resets the backup timer to zero.

### 3.5.2.3.5 Control Ring Requirements

The requirements to activate the ring control functions within the ASC follow.

#### 3.5.2.3.5.1 Control Ring Stop Time

Upon request from a management station, the ASC shall store if the timing is stopped for each ring. The ASC resets the ring control stop time settings to zero, when the ASC goes into Backup Mode. If the ASC is commanded to change the ring control stop time settings remotely, the ASC resets the backup timer to zero seconds.

Do Not Copy Without Written Permission © 2023 AASHTO / ITE / NEMA

#### 3.5.2.3.5.2 Control Ring Force Offs

Upon request from a management station, the ASC shall store if the Force Off settings are enabled for each ring. The ASC resets the ring control force off settings to zero, when the ASC goes into Backup Mode. If the ASC is commanded to change the ring control force off settings remotely, the ASC resets the backup timer to zero seconds.

#### 3.5.2.3.5.3 Control Ring Maximum 2 Time Settings

Upon request from a management station, the ASC shall store if the Maximum 2 Time setting is enabled for each ring. The ASC resets the ring Maximum 2 Time settings to zero, when the ASC goes into Backup Mode. If the ASC is commanded to change the ring Maximum 2 Time settings remotely, the ASC resets the backup timer to zero seconds.

#### 3.5.2.3.5.4 Control Ring Maximum 3 Time Settings

Upon request from a management station, the ASC shall store if the Maximum 3 Time setting is enabled for each ring. The ASC resets the ring Maximum 3 Time settings to zero, when the ASC goes into Backup Mode. If the ASC is commanded to change the ring Maximum 3 Time settings remotely, the ASC resets the backup timer to zero seconds.

#### 3.5.2.3.5.5 Control Ring Maximum Inhibit Settings

Upon request from a management station, the ASC shall store if the Maximum time setting is inhibited for each ring. The ASC resets the ring control maximum time inhibit settings to zero, when the ASC goes into Backup Mode. If the ASC is commanded to change the ring control maximum time inhibit settings remotely, the ASC resets the backup timer to zero seconds.

#### 3.5.2.3.5.6 Control Ring Pedestrian Recycle Settings

Upon request from a management station, the ASC shall store if the pedestrian recycle setting is active for each ring. The ASC resets the ring control pedestrian recycle settings to zero, when the ASC goes into Backup Mode. If the ASC is commanded to change the ring control pedestrian recycle settings remotely, the ASC resets the backup timer to zero seconds.

#### 3.5.2.3.5.7 Control Ring Red Rest Settings

Upon request from a management station, the ASC shall store if the Red rest setting is active for each ring. The ASC resets the ring control Red rest settings to zero, when the ASC goes into Backup Mode. If the ASC is commanded to change the ring control Red rest settings remotely, the ASC resets the backup timer to zero seconds.

#### 3.5.2.3.5.8 Control Ring Red Clearance Omit Settings

Upon request from a management station, the ASC shall store if the Red clearance setting is omitted for each ring. The ASC resets the ring control Red clearance omit settings to zero, when the ASC goes into Backup Mode. If the ASC is commanded to change the ring control Red clearance omit settings remotely, the ASC resets the backup timer to zero seconds.

#### 3.5.2.3.5.9 Determine Maximum Number of Ring Control Groups

Upon request from a management station, the ASC shall return the maximum number of ring control groups supported by the device. Each ring control group contains 8 unique rings, for example, ring control group 1 contains rings 1-8, while ring control group 2 contains rings 9-16.

© 2023 AASHTO / ITE / NEMA Do Not Copy Without Written Permission

#### 3.5.2.3.6 Special Functions Control Requirements

The requirements to control the special functions within the ASC follow.

##### 3.5.2.3.6.1 Activate Special Function

Upon request from a management station, the ASC shall store if the special function, regardless if it is a physical or logical function, is turned on or off. The ASC sets this value to zero, when the ASC is in backup mode.

##### 3.5.2.3.6.2 Release Special Function Control

Upon request from a management station, the ASC shall release the control of the special function, regardless of the current control source, and revert control back to the ASC.

#### 3.5.2.3.7 Control Frame 40 Requirements

The requirements for active action plans within the ASC follow.

##### 3.5.2.3.7.1 Control TS2 Port 1 Frame 40 Messages

Upon request from a management station, the ASC shall enable or disable the Frame 40 messages for each Port 1 address. Frame 40 is used to poll the secondary stations for a secondary to secondary message exchange. The ASC only transmits Command 40 series frames to those devices that are enabled, as determined by this value.

#### 3.5.2.3.8 Activate Action Plan

Upon request from a management station, the ASC shall activate a configured action plan. This requirement allows a management station to activate or override a timebased action plan entry, even if the timing pattern the action plan is associated with is not in effect.

#### 3.5.2.3.9 Remote Manual Control Requirements

The requirements to remotely advance the ASC to the next interval follow.

##### 3.5.2.3.9.1 Enable Manual Control

Upon request from a management station, the ASC shall enable or disable remote manual control mode. While in remote manual control mode, the ASC advances to the next interval only upon receiving an advance command from a management station.

##### 3.5.2.3.9.2 Remote Manual Control Advance Command

Upon request from a management station, the ASC shall allow a management station to command the signal controller to advance to the next interval. Under remote manual control mode, the ASC behaves as if the manual control input were active. The ASC will not time phases, such as when using a coordinated timing pattern, but instead will advance to the next interval when remotely commanded to by a management station.

##### 3.5.2.3.9.3 Configure Manual Control Timeout

Upon request from a management station, the ASC shall store a timeout value, from 1 to 255 seconds, as a failsafe in case of a loss of communications. When the ASC is in remote manual control mode, the remote manual control timer will decrement once per second until it reaches zero, at which time the ASC

Do Not Copy Without Written Permission © 2023 AASHTO / ITE / NEMA

will disable remote manual control and revert back to normal signal operation. This forces a management station to continually reset the remote manual control timer to maintain remote manual control.

### 3.5.3 Detector Management Requirements

The requirements for managing the detectors of an ASC follow.

#### 3.5.3.1 Manage Detector Configuration Requirements

The requirements to manage the detector configurations of an ASC are defined in the following paragraphs.

##### 3.5.3.1.1 Configure Detectors Requirements

To manage the traffic-actuated operations of an ASC controller, the ASC shall allow a management system to configure each connected detector, including vehicle and pedestrian detectors. The requirements to configure the detector of an ASC follow.

###### 3.5.3.1.1.1 Configure Vehicle Detectors Requirements

The requirements to manage the vehicle detector configurations of an ASC are defined in the following paragraphs.

####### 3.5.3.1.1.1.1 Configure Vehicle Volume Detectors

Upon request from a management station, the ASC shall store if a vehicle detector is instructed to collect volume data.

####### 3.5.3.1.1.1.2 Configure Vehicle Occupancy Detectors

Upon request from a management station, the ASC shall store if a vehicle detector is instructed to collect occupancy data.

####### 3.5.3.1.1.1.3 Configure Vehicle Speed Detectors

Upon request from a management station, the ASC shall store if a vehicle detector is instructed to collect speed data.

####### 3.5.3.1.1.1.4 Configure Vehicle Detection Zone Length

Upon request from a management station, the ASC shall store the vehicle detector's detection zone length measured from leading edge to trailing edge of the detection zone in centimeters from 0.00 to 40.00 meters.

####### 3.5.3.1.1.1.5 Configure Vehicle Travel Mode

Upon request from a management station, the ASC shall store the travel mode identified for the detector. The travel mode shall be one of general (not otherwise assigned), transit, or bicycle. Pedestrian detectors are managed separately.

####### 3.5.3.1.1.1.6 Configure Vehicle Detector Yellow Lock Call Enabled

Upon request from a management station, the ASC shall store if a vehicle detector is instructed to lock a call to the assigned phase if an actuation occurs while the phase is not timing the Green interval. If the

© 2023 AASHTO / ITE / NEMA Do Not Copy Without Written Permission

Yellow Lock Call and Red Lock Call are both enabled for a given phase, the ASC shall keep the yellow lock call enabled.

#### 3.5.3.1.1.1.7 Configure Vehicle Detector Red Lock Call Enabled

Upon request from a management station, the ASC shall store if a vehicle detector is instructed to lock a call to the assigned phase if an actuation occurs while the phase is not timing Green or Yellow intervals. If the Yellow Lock Call and Red Lock Call are both enabled for a given phase, the ASC shall disable the red lock call.

#### 3.5.3.1.1.1.8 Configure Vehicle Detector Passage Enabled

Upon request from a management station, the ASC shall store if the associated phase passage timer remains reset for the duration of a vehicle detector actuation if the Phase is in the Green interval.

#### 3.5.3.1.1.1.9 Configure Vehicle Detector Added Initial Time Enabled

Upon request from a management station, the ASC shall store if detector actuation counts for a vehicle detector are accumulated for use in the added initial calculations. If enabled, counts are accumulated starting at the beginning of the Yellow interval and terminating at the beginning of the Green interval.

#### 3.5.3.1.1.1.10 Configure Vehicle Detector Queue Enabled

Upon request from a management station, the ASC shall store if the Green interval of the assigned phase for a vehicle detector is extended upon actuation until either a gap occurs or the Green has been active longer than the Vehicle Detector Queue Limit Time.

#### 3.5.3.1.1.1.11 Configure Vehicle Detector Call Enabled

Upon request from a management station, the ASC shall store if a call is placed for vehicle service upon actuation of a vehicle detector while the phase is not timing the Green interval.

#### 3.5.3.1.1.1.12 Configure Vehicle Detector Call Phase

Upon request from a management station, the ASC shall store the assigned phase associated with a vehicle detector. If no phase is assigned, the ASC disables the ability of the detector to call a phase.

#### 3.5.3.1.1.1.13 Configure Vehicle Detector Switch Phase

Upon request from a management station, the ASC shall store the assigned phase to which actuation of a vehicle detector is switched when the assigned phase is Yellow or Red and the program entered phase is Green.

#### 3.5.3.1.1.1.14 Configure Vehicle Detector Delay Time

Upon request from a management station, the ASC shall store the time, in tenths of a second, from 0 to 255.0 seconds, that an actuation for a vehicle detector is delayed when the phase is not Green.

#### 3.5.3.1.1.1.15 Configure Vehicle Detector Extend Time

Upon request from a management station, the ASC shall store the time, in tenths of a second, from 0 to 25.5 seconds, that an actuation for a vehicle detector is extended from the point of termination, when the phase is Green.

Do Not Copy Without Written Permission © 2023 AASHTO / ITE / NEMA

#### 3.5.3.1.1.1.16 Configure Vehicle Detector Queue Limit Time

Upon request from a management station, the ASC shall store the length of time in seconds, from 0 to 255 seconds, that an actuation from a vehicle queue detector may continue into the Green phase. This time commences when the phase becomes Green and when the time expires, the ASC ignores any associated actuations / detector inputs. The ASC might shorten this time due to other overriding parameters such as Maximum Green time or Force Off commands.

#### 3.5.3.1.1.1.17 Configure Vehicle Detector No Activity Time

Upon request from a management station, the ASC shall store the time period in minutes, from 0 to 255 minutes, before the ASC declares the absence of any actuations for a vehicle detector to be a fault and the vehicle detector is classified as failed. The ASC disables the diagnostics for this detector if the No Activity Time value for this vehicle detector is set to zero.

#### 3.5.3.1.1.1.18 Configure Vehicle Detector Maximum Presence Time

Upon request from a management station, the ASC shall store the time period in minutes, from 0 to 255 minutes, before the ASC declares the presence of a continuous actuation of a vehicle detector to be a fault and the vehicle detector is classified as failed. The ASC disables the diagnostics for this detector if the Maximum Presence Time value for this vehicle detector is set to zero.

#### 3.5.3.1.1.1.19 Configure Vehicle Detector Erratic Counts

Upon request from a management station, the ASC shall store the number of actuations for a vehicle detector, from 0 to 255 counts per minute, above which the ASC declares the vehicle detector to be a fault and the vehicle detector is classified as failed. The ASC disables the diagnostics for this detector if the Erratic Count value for this vehicle detector is set to zero.

#### 3.5.3.1.1.1.20 Configure Vehicle Detector Fail Time

Upon request from a management station, the ASC shall store the amount of time, in seconds, that the ASC holds a call for the associated phase during all non-Green intervals for a failed vehicle detector. The ASC places a constant call on the phase (maximum recall), if the vehicle detector fail time is set to the maximum of 255 seconds. The ASC does not place a call on this detector if the Fail Time value for this vehicle detector is set to zero.

#### 3.5.3.1.1.1.21 Configure Single Detector Speed Mode

Upon request from a management station, the ASC shall store the single detector speed mode. It identifies how the ASC should calculate speed without a paired detector. If the speed detector is a paired detector, this option is used when there is an error on one or more of the paired detectors.

#### 3.5.3.1.1.1.22 Configure Paired Detector

Upon request from a management station, the ASC shall store the vehicle detector identifier of the paired detector. A value of 0 is the default, indicating that the detector is not paired. Paired detectors may be used for calculating speed, wrong way travel, or other conditions.

> Note: It is the responsibility of the implementers of this feature to ensure that the detector pairs make logical sense, they are located in the same lane, the paired detectors reference each other, and they are properly identified detector placements.

© 2023 AASHTO / ITE / NEMA Do Not Copy Without Written Permission

#### 3.5.3.1.1.1.23 Configure Paired Detector Placement

Upon request from a management station, the ASC shall store whether a paired detector is the leading or trailing detector of the detector pair.

#### 3.5.3.1.1.1.24 Configure Paired Detector Spacing

Upon request from a management station, the ASC shall store the distance between the detector pair measured from leading edge to leading edge of each of the two vehicle detectors measured in centimeters from 0 to 65,535 centimeters.

#### 3.5.3.1.1.1.25 Configure Average Vehicle Length

Upon request from a management station, the ASC shall store the average vehicle length for the detection zone in a range from .01 to 40 meters.

### 3.5.3.1.1.2 Configure Pedestrian Detectors Requirements

The Manual on Uniform Traffic Control Devices (MUTCD) defines, "Pedestrian detectors may be pushbuttons or passive detection devices. Passive detection devices register the presence of a pedestrian in a position indicative of a desire to cross, without requiring the pedestrian to push a button. Some passive detection devices are capable of tracking the progress of a pedestrian as the pedestrian crosses the roadway for the purpose of extending or shortening the duration of certain pedestrian timing intervals." The requirements to manage the pedestrian detector configurations of an ASC follow.

#### 3.5.3.1.1.2.1 Configure Pedestrian Detector Call Phase

Upon request from a management station, the ASC shall store the assigned phase associated with a pedestrian detector. If no phase is assigned, the ASC disables the ability of the detector to call a phase.

#### 3.5.3.1.1.2.2 Configure Pedestrian Detector No Activity Time

Upon request from a management station, the ASC shall store the time period in minutes, from 0 to 255 minutes, when the ASC declares the absence of any actuations for a pedestrian detector to be a fault, and the pedestrian detector is classified as failed. The ASC disables the diagnostics for this detector, if the No Activity Time for this pedestrian detector is set to zero.

#### 3.5.3.1.1.2.3 Configure Pedestrian Detector Maximum Presence Time

Upon request from a management station, the ASC shall store the time period in minutes, from 0 to 255 minutes, when the ASC will declare the presence of a continuous actuation of a pedestrian detector to be a fault, and the pedestrian detector is classified as failed. The ASC disables the diagnostics for this detector, if the Maximum Presence Time for this pedestrian detector is set to zero.

#### 3.5.3.1.1.2.4 Configure Pedestrian Detector Erratic Counts

Upon request from a management station, the ASC shall store the number of actuations for a pedestrian detector, from 0 to 255 counts per minute, above which the ASC declares the pedestrian detector to be a fault and the pedestrian detector is classified as failed. The ASC disables the diagnostics for this detector, if the Erratic Count value for this pedestrian detector is set to zero.

#### 3.5.3.1.1.2.5 Configure Pedestrian Detector Non-Lock Calls

Upon request from a management station, the ASC shall store if a pedestrian detector is used to place non-locked calls for pedestrian timings.

Do Not Copy Without Written Permission © 2023 AASHTO / ITE / NEMA

#### 3.5.3.1.1.2.6 Configure Pedestrian Detector Alternate Pedestrian Timing

Upon request from a management station, the ASC shall store if a pedestrian detector is used to place calls for alternate pedestrian timing.

#### 3.5.3.1.1.2.7 Configure Pedestrian Detector Type

Upon request from a management station, the ASC shall store if a pedestrian detector is used to detect the presence of a pedestrian in the pedestrian crosswalk instead of detecting a pedestrian call for service.

### 3.5.3.1.2 Retrieve Detector Configuration Requirements

The requirements to retrieve the detector configuration settings, including vehicle and pedestrian detectors, from the ASC follow.

#### 3.5.3.1.2.1 Retrieve Vehicle Detectors Requirements

The requirements to retrieve the vehicle detector configurations of an ASC follow.

##### 3.5.3.1.2.1.1 Determine Maximum Number of Vehicle Detectors

Upon request from a management station, the ASC shall return the maximum number of vehicle detectors that can be configured within the ASC.

#### 3.5.3.1.2.2 Retrieve Pedestrian Detectors Requirements

The requirements to retrieve the vehicle detector configurations of an ASC follow.

##### 3.5.3.1.2.2.1 Determine Maximum Number of Pedestrian Detectors

Upon request from a management station, the ASC shall return the maximum number of pedestrian detectors that can be configured within the ASC.

### 3.5.3.2 Retrieve Detector Status Requirements

The requirements to monitor the status of the detectors connected to an ASC controller follow.

#### 3.5.3.2.1 Monitor Vehicle Detector Status Groups Requirements

The requirements to monitor the current status of the vehicle detectors (organized as vehicle detector status groups) within the ASC follow.

##### 3.5.3.2.1.1 Determine Maximum Number of Vehicle Detector Status Groups

Upon request from a management station, the ASC shall return the maximum number of vehicle detector status groups supported by the device. Each vehicle detector status group contains 8 unique vehicle detectors, for example, vehicle detector status group 1 contains vehicle detectors 1-8, while vehicle detector status 2 contains vehicle detectors 9-16.

##### 3.5.3.2.1.2 Monitor Vehicle Detector Status Group Active

Upon request from a management station, the ASC shall return for each vehicle detector defined in a vehicle detector status group, if the corresponding vehicle detector is currently active (vehicle detected).

© 2023 AASHTO / ITE / NEMA Do Not Copy Without Written Permission

#### 3.5.3.2.1.3 Monitor Vehicle Detector Status Group Alarm Status

Upon request from a management station, the ASC shall return for each vehicle detector defined in a vehicle detector status group, if the corresponding vehicle detector has a current alarm (defined by the potential alarm conditions in the vehicle detector alarm). The ASC clears any alarm that is not currently active.

### 3.5.3.2.2 Monitor Pedestrian Detector Status Requirements

The requirements to monitor the current overview status of the pedestrian detectors within the ASC follow.

#### 3.5.3.2.2.1 Determine Maximum Number of Pedestrian Detector Status Groups

Upon request from a management station, the ASC shall return the maximum number of pedestrian detector status groups supported by the device. Each pedestrian detector status group contains 8 unique pedestrian detectors, for example, vehicle detector status group 1 contains pedestrian detectors 1-8, while pedestrian detector status 2 contains pedestrian detectors 9-16.

#### 3.5.3.2.2.2 Monitor Pedestrian Detector Status Active

Upon request from a management station, the ASC shall return for each pedestrian detector, if the corresponding pedestrian detector is currently active (pedestrian detected or actuated by a pedestrian).

#### 3.5.3.2.2.3 Monitor Pedestrian Detector Alarm Status

Upon request from a management station, the ASC shall return for each pedestrian detector, if the corresponding pedestrian detector has a current alarm (defined by the potential alarm conditions in the pedestrian detector alarm). The ASC clears any alarm that is not currently active.

### 3.5.3.3 Retrieve Detector Health Requirements

The requirements to monitor the health status of the detectors connected to an ASC controller follow.

### 3.5.3.3.1 Retrieve Vehicle Detector Health Requirements

The requirements to monitor the health status of vehicle detectors connected to an ASC controller follow.

#### 3.5.3.3.1.1 Monitor Vehicle Detector No Activity Fault

Upon request from a management station, the ASC shall return if a vehicle detector has been flagged as non-operational / failed due to the absence of any actuations for a user-defined time period (no activity time).

#### 3.5.3.3.1.2 Monitor Vehicle Detector Max Presence Fault

Upon request from a management station, the ASC shall return if a vehicle detector has been flagged as non-operational / failed due to the continuous actuations for a user-defined time period (maximum presence time).

#### 3.5.3.3.1.3 Monitor Vehicle Detector Erratic Output Fault

Upon request from a management station, the ASC shall return if a vehicle detector has been flagged as non-operational / failed due to the higher number of actuations per minute than the user-defined threshold (erratic counts).

Do Not Copy Without Written Permission © 2023 AASHTO / ITE / NEMA

#### 3.5.3.3.1.4 Monitor Vehicle Detector Communications Fault

Upon request from a management station, the ASC shall return if communications with a vehicle detector have failed.

#### 3.5.3.3.1.5 Monitor Vehicle Detector Configuration Fault

Upon request from a management station, the ASC shall return if a vehicle detector is assigned but is not supported.

### 3.5.3.3.2 Retrieve Vehicle Loop Detector Requirements

The requirements to monitor the health status of vehicle loop detectors connected to an ASC controller follow.

#### 3.5.3.3.2.1 Monitor Loop Vehicle Detector Watchdog Failure

Upon request from a management station, the ASC shall return if a vehicle loop detector has been flagged as a non-operational / failed due to a watchdog failure.

#### 3.5.3.3.2.2 Monitor Loop Vehicle Detector Open Loop Failure

Upon request from a management station, the ASC shall return if a vehicle loop detector has been flagged as a non-operational / failed due to an open loop (broken wire).

#### 3.5.3.3.2.3 Monitor Loop Vehicle Detector Shorted Loop Fault

Upon request from a management station, the ASC shall return if a vehicle loop detector has been flagged as a non-operational / failed due to a shorted loop wire.

#### 3.5.3.3.2.4 Monitor Loop Vehicle Detector Excessive Change Fault

Upon request from a management station, the ASC shall return if a vehicle loop detector has been flagged as a non-operational / failed due to an inductance change that exceeded the expected value.

### 3.5.3.3.3 Retrieve Pedestrian Detector Health Requirements

The requirements to monitor the health status of vehicle detectors connected to an ASC controller follow.

#### 3.5.3.3.3.1 Monitor Pedestrian Detector No Activity Fault

Upon request from a management station, the ASC shall return if a pedestrian detector has been flagged as a non-operational / failed due to the absence of any actuations for a user-defined time period (no activity time).

#### 3.5.3.3.3.2 Monitor Pedestrian Detector Max Presence Fault

Upon request from a management station, the ASC shall return if a pedestrian detector has been flagged as a non-operational / failed due to the continuous actuations for a user-defined time period (maximum presence time).

#### 3.5.3.3.3.3 Monitor Pedestrian Detector Erratic Output Fault

Upon request from a management station, the ASC shall return if a pedestrian detector has been flagged as a non-operational / failed due to the higher number of actuations per minute than the user-defined threshold (erratic counts).

© 2023 AASHTO / ITE / NEMA Do Not Copy Without Written Permission

#### 3.5.3.3.3.4 Monitor Pedestrian Detector Communications Fault

Upon request from a management station, the ASC shall return if communications with a pedestrian detector have failed.

#### 3.5.3.3.3.5 Monitor Pedestrian Detector Configuration Fault

Upon request from a management station, the ASC shall return if a pedestrian detector is assigned but is not supported.

### 3.5.3.4 Control Detector Requirements

The requirements to control detectors connected to an ASC controller follow.

#### 3.5.3.4.1 Control Vehicle Detector Reset

Upon request from a management station, the ASC shall reset each of the vehicle detectors individually. The ASC automatically returns a detector reset to a non-reset state after the ASC has executed the reset command.

#### 3.5.3.4.2 Control Pedestrian Detector Reset

Upon request from a management station, the ASC shall reset each of the pedestrian detectors individually. The ASC automatically returns a detector reset to a non-reset state after the ASC has executed the reset command.

#### 3.5.3.4.3 Control Vehicle Detector Actuation

Upon request from a management station, the ASC shall store if an actuation is placed on a vehicle detector.

#### 3.5.3.4.4 Control Pedestrian Detector Actuation

Upon request from a management station, the ASC shall store if an actuation is placed on a pedestrian detector.

### 3.5.3.5 Manage Vehicle Detector Data Collection Requirements

The requirements to manage the data obtainable from the vehicle detectors connected to an ASC controller follow.

#### 3.5.3.5.1 Configure Vehicle Detector Data Collection Requirements

The requirements to configure the data collection from vehicle detectors stored within the ASC follow.

#### 3.5.3.5.1.1 Configure Detector Data Collection Sample Period Requirements

The requirements to configure the data collection for the Sample Period from vehicle detectors stored within the ASC follow. The Sample Period data collection is used to collect vehicle detector data from all vehicle detectors.

Do Not Copy Without Written Permission © 2023 AASHTO / ITE / NEMA

#### 3.5.3.5.1.1.1 Configure Detector Data Sample Period

Upon request from a management station, the ASC shall store the sample period for collecting detector data in seconds, from 0 to 255 seconds. The ASC stores the collected detector data in the ASC's database at the end of the sample period and resets the detector data timer.

#### 3.5.3.5.1.1.2 Configure Detector Data Sample Period—Version 3

Upon request from a management station, the ASC shall store the sample period for collecting detector data in seconds, from 0 to 3600 seconds. The ASC stores the collected detector data in the ASC's database at the end of the sample period and resets the detector data timer.

### 3.5.3.5.2 Retrieve Vehicle Detector Data Collection Requirements

The requirements to retrieve the data collection from vehicle detectors stored within the ASC follow.

#### 3.5.3.5.2.1 Retrieve Detector Data Collection Sample Period Requirements

The requirements to retrieve the data collection for the sample period from vehicle detectors stored within the ASC follow. The sample period data collection is used to collect vehicle detector data from all vehicle detectors.

#### 3.5.3.5.2.1.1 Monitor Detector Data Sequence

Upon request from a management station, the ASC shall return a sequence number, from 0 to 255, for detector data reported. The ASC increments the detector data sequence number by 1 at the end of the sample period. The sequence number is used by the management station to determine if the detector data reported is duplicated or if there is detector data missing.

#### 3.5.3.5.2.1.2 Determine Detector Data Active Detectors

Upon request from a management station, the ASC shall return the identifier of the vehicle detectors that are actively collecting detector data.

#### 3.5.3.5.2.1.3 Monitor Volume Data

Upon request from a management station, the ASC shall return the vehicle count, in numbers of vehicles from 0 to 255 vehicles, measured by each of those vehicle detectors assigned to collect volume data during the sample period. The ASC resets the volume count number at the end of the sample period and restarts the count at the beginning of the new sample period.

#### 3.5.3.5.2.1.4 Monitor Average Speed

Upon request from a management station, the ASC shall return the average speed, in kilometers per hour, measured by each of those vehicle detectors assigned to collect average speed data during the sample period. The ASC resets the average speed value at the end of the sample period. Valid average speed values are from 0 to 255 kilometers per hour.

#### 3.5.3.5.2.1.5 Monitor Occupancy Data

Upon request from a management station, the ASC shall return occupancy rates in 0.5% increments, from 0 to 100%, from those detectors assigned to collect occupancy data during the sample period. The ASC resets the occupancy rate number at the end of the sample period and restarts the occupancy calculation at the beginning of the new sample period.

© 2023 AASHTO / ITE / NEMA Do Not Copy Without Written Permission

#### 3.5.3.5.2.1.6 Monitor Vehicle Detector Data Alarms

Upon request from a management station, the ASC shall return any fault data for the vehicle detector with the following priority:

a) Erratic Output Fault—The detector has been flagged as non-operational due to erratic outputs (excessive counts)
b) Watchdog Fault
c) Excessive Change Fault
d) Shorted Loop Fault
e) Open Loop Fault
f) No Activity Fault—The detector has been flagged as non-operational due to lower than expected activity
g) Max Presence Fault—The detector has been flagged as non-operational due to a presence indicator that exceeds the maximum expected time

The ASC returns the highest numbered fault if more than one fault is active (i.e., indicate OpenLoop rather than NoActivity).

#### 3.5.3.5.2.1.7 Monitor Detector Data Sample Time

Upon request from a management station, the ASC shall return the end time in controller local time of the vehicle detector data collection period (sample period).

#### 3.5.3.5.2.1.8 Monitor Detector Data Sample Duration

Upon request from a management station, the ASC shall return the duration of the data collection period in effect in seconds from 1 to 3600 for the vehicle detectors. There are various ways to configure the data collection period (i.e., a duration specifically set by the user or a duration set to that of the cycle time). This requirement refers to the sample period that is in effect when the data is collected.

### 3.5.3.6 Manage Pedestrian Detector Data Collection Requirements

The requirements to manage the data obtainable from the pedestrian detectors connected to an ASC controller follow.

#### 3.5.3.6.1 Configure Pedestrian Detector Data Collection Requirements

The requirements to configure the data collection from pedestrian detectors stored within the ASC follow.

#### 3.5.3.6.1.1 Configure Pedestrian Data Collection Sample Period

Upon request from a management station, the ASC shall store the sample period for collecting pedestrian detector data as follows: a value of 0 indicates that no sampling is to be performed, a value of 1 to 3600 is the number of seconds for the sample period, and a value of 65535 indicates that the sample period should be the same as the sample period for the vehicle detectors.

#### 3.5.3.6.2 Retrieve Pedestrian Detector Data Collection Requirements

The requirements to retrieve the data collection from vehicle detectors stored within the ASC follow.

#### 3.5.3.6.2.1 Monitor Pedestrian Counts

Upon request from a management station, the ASC shall return the number of pedestrians currently detected within the detection zone during the defined sample period.

Do Not Copy Without Written Permission © 2023 AASHTO / ITE / NEMA

#### 3.5.3.6.2.2 Monitor Pedestrian Detector Actuations

Upon request from a management station, the ASC shall return the number of pedestrian actuations during the defined sample period.

#### 3.5.3.6.2.3 Monitor Pedestrian Detector Data Alarms

Upon request from a management station, the ASC shall return any fault data for the pedestrian detector with the following priority:

a) Erratic Output Fault—The detector has been flagged as non-operational due to erratic outputs (excessive counts).
b) Communications Fault—Communications to the detector have failed.
c) Configuration Fault—The detector is assigned by not supported.
d) No Activity Fault—The detector has been flagged as non-operational due to lower than expected activity.
e) Max Presence Fault—The detector has been flagged as non-operational due to a presence indicator that exceeds the maximum expected time.
f) Other Fault—The detector has failed due to some other cause.

#### 3.5.3.6.2.4 Monitor Pedestrian Services

Upon request from a management station, the ASC shall return the number of pedestrian services (the number of times the pedestrian transitioned from don't walk to walk) during the defined sample period.

#### 3.5.3.6.2.5 Determine Pedestrian Detector Data Active Detectors

Upon request from a management station, the ASC shall return the identifier of the pedestrian detectors that are actively collecting detector data.

#### 3.5.3.6.2.6 Monitor Pedestrian Detector Data Sample Time

Upon request from a management station, the ASC shall return the end time in controller local time of the pedestrian detector data collection period (sample period).

#### 3.5.3.6.2.7 Monitor Pedestrian Detector Data Sample Duration

Upon request from a management station, the ASC shall return the duration of the data collection period in effect in seconds from 1 to 3600 for the pedestrian detectors. There are various ways to configure the data collection period (i.e., a duration specifically set by the user, a duration set to the vehicle data collection period, or a duration set to that of the cycle time). This requirement refers to the sample period that is in effect when the data is collected.

#### 3.5.3.6.2.8 Monitor Pedestrian Detector Data Sequence

Upon request from a management station, the ASC shall return a sequence number, from 0 to 255, for pedestrian detector data reported. The ASC increments the pedestrian detector data sequence number by 1 at the end of the sample period. The sequence number is used by the management station to determine if the pedestrian detector data reported is duplicated or if there is pedestrian detector data missing.

### 3.5.4 Connected Vehicles Interface Management

The requirements for managing the interfaces for an ASC in a connected vehicle environment are categorized as follows:

© 2023 AASHTO / ITE / NEMA Do Not Copy Without Written Permission

a) Interface - Management Station - ASC (ASC Process)
b) Interface - Management Station - CV Roadside Process (Deprecated)
c) Interface - ASC (ASC Process) - CV Roadside Process

The requirements for managing the connected vehicles interface of an ASC follow.

#### 3.5.4.1 Manage Management Station—ASC Interface Requirements

The management station for these requirements is NOT an RSU; it represents a computing device at a traffic management center or could be a field maintenance laptop. The requirements to manage the data exchanges between a management station and the ASC are:

a) Manage RSU Interface
b) Manage RSU Interface Watchdog
c) Manage Signal Phase and Timing Data

The requirements for a management station to manage the ASC in a connected vehicle environment follow.

##### 3.5.4.1.1 Manage RSU Interface Requirements

The requirements to manage the interface between the ASC and an RSU (CV Roadside Process) follow.

###### 3.5.4.1.1.1 Configure RSU Interface

Upon request from a management station, the ASC shall store which communications port is used to exchange data with an RSU.

###### 3.5.4.1.1.2 Configure Logical RSU Ports

Upon request from a management station, the ASC shall store the name and network address of each RSU that the ASC will exchange data with. An ASC may communicate with up to 16 RSUs as part of the connected vehicle environment.

###### 3.5.4.1.1.3 Configure RSU Interface Polling Period

Upon request from a management station, the ASC shall store the period, in milliseconds, that the ASC exchanges data with an RSU for connected vehicle data.

##### 3.5.4.1.2 Manage RSU Interface Watchdog Requirements

The requirements to manage the watchdog timer for the ASC's interface with an RSU follow.

###### 3.5.4.1.2.1 Configure RSU Interface Watchdog

Upon request from a management station, the ASC shall store the maximum time duration, in milliseconds, for an RSU watchdog timer in the ASC. The RSU watchdog timer is used to track activity across an RSU interface. If no activity is detected across the RSU interface for a period longer than the maximum time duration, an RSU watchdog no activity fault is reported. The RSU watchdog timer is a value from 1 to 65535 milliseconds and includes a value to disable the watchdog timer.

###### 3.5.4.1.2.2 Monitor RSU Interface Watchdog Timer

Upon request from a management station, the ASC shall return the RSU watchdog time, from 0 to 65535 milliseconds, for a specific logical RSU port as provided in the request. The RSU watchdog time

Do Not Copy Without Written Permission © 2023 AASHTO / ITE / NEMA

represents the amount of time that has elapsed since activity was last detected across the specified logical RSU port interface.

#### 3.5.4.1.3 Manage Signal Phase and Timing Requirements

Some of the key applications that have been developed for the connected vehicle environment are related to intersection safety. For signalized intersections, this involves an RSU broadcasting SPaT (Signal Phase and Timing) messages, as defined by SAE J2735, to connected vehicles in the vicinity. The source of the SPaT data broadcasted by an RSU comes from the ASC, so the ASC has to exchange this data with the CV Roadside Process in an RSU. However, a management station, such as one in a traffic management center, needs to monitor what data is being broadcasted to connected vehicles. The requirements that allow a management station to configure and retrieve signal phase and timing data from an ASC follow.

##### 3.5.4.1.3.1 Enable Signal Phase and Timing Data

Upon request from a management station, the ASC shall store if the controller unit is to generate signal phase and timing data for the intersection(s).

##### 3.5.4.1.3.2 Retrieve Intersection Identifier [Deprecated]

Upon request from a management station, the ASC shall return the intersection identifiers for the intersections that the signal phase and timing data is for. An ASC may control traffic flow for more than one intersection. An intersection identifier is used to uniquely identify an intersection within a region.

> Note: This requirement was deprecated in NTCIP 1202 v03B and replaced by a new requirement, 3.5.4.1.3.17.2, Configure Signal Group Intersection Mapping, which allows the intersection identifier to be configured. Requirement 3.5.4.1.3.11, Configure Road Authority allows the the road authority identifier to be configured.

##### 3.5.4.1.3.3 Retrieve Signal Phase and Timing Time Point [Deprecated]

Upon request from a management station, the ASC shall return the time points for the movement start/end times reported in the signal phase and timing data. Time points are in ticks, each tick representing units of tenths of a second, with a value of 0 representing the top of the hour, resulting in a range of 0 to 35999. These time points do not need to be synchronized with UTC time or the RSU time.

This requirement allows a TMC operator to view the controller's current time in ticks. Many signal controllers use AC line frequency to determine its internal time—this has the benefit that all signal controllers that use the same line frequency, such as along an arterial, remain synchronized for signal timing coordination. Therefore, the representation of movement start/end time points in the future should not depend on the ASC system time being synchronized with NIST UTC time or being synchronized with the RSU system time.

However, for a connected environment, it is important that all connected devices use time from a known and reliable source. In this context, a reliable source is defined as a time source whose accuracy is known and acceptable. For the purposes of this discussion, the time from a reliable source will be called **disciplined time**—that is, it "does not accumulate any offset over time." The RSU, which is expected to have access to a time source with disciplined time, can then convert these time points (and the movement start/end times) into time marks in disciplined time.

> Note: This requirement was deprecated in NTCIP 1202 v03B and replaced by a new requirement, 3.5.4.1.3.18, Retrieve Signal Phase and Timing Time Point V2, which supports leap seconds.

© 2023 AASHTO / ITE / NEMA Do Not Copy Without Written Permission

#### 3.5.4.1.3.4 Retrieve Signal Phase and Timing Generation Time

Upon request from a management station, the ASC shall return the time when the signal phase and timing data was generated by the ASC. This timestamp is represented in hours, minutes, seconds, and milliseconds of the time of day. This requirement is for testing purposes only. This requirement allows the operator at a TMC to view when the controller generates the SPaT data. Note it is not used by the RSU to generate the SAE J2735 SPaT message, though it may be a need in the future. The timestamp in the SAE J2735 SPaT message is the time the message is generated and signed.

#### 3.5.4.1.3.5 Retrieve Signal Phase and Timing Intersection Status [Deprecated]

Upon request from a management station, the ASC shall return the status of the ASC as part of the signal phase and timing data broadcasted to connected devices. The intersection status values are defined by DE_IntersectionStatusObject in SAE J2735.

> Note: This requirement was deprecated in NTCIP 1202 v03B and replaced by new requirements, 3.5.4.1.3.12, Retrieve Signal Phase and Timing Intersection Status Requirements, which clarifies the definitions of the status bits.

#### 3.5.4.1.3.6 Exchange Movement Status Requirements

The SPaT message that is broadcasted by an RSU to connected vehicles includes information about what vehicle (and pedestrian) movements are permitted at a signalized intersection. To provide this information, the RSU needs movement data from the ASC. These requirements allow a management station to monitor the movement data that an ASC is exchanging with the CV Roadside Process. The requirements to retrieve the movement data that an ASC is exchanging with a CV Roadside Process are defined as follows.

##### 3.5.4.1.3.6.1 Monitor Movement State [Deprecated]

Upon request from a management station, the ASC shall return the overall current state of the movements (for a channel) at the intersection. The valid states are defined by DE_MovementPhaseState in SAE J2735.

> Note: This requirement was deprecated in NTCIP 1202 v03B and replaced by a new requirement, 3.5.4.1.3.6.8, Monitor Movement State V2, which associates a movement with a signal group instead of a channel.

##### 3.5.4.1.3.6.2 Retrieve Movement Timing Requirements

The requirements to provide the timing of a movement at the intersection are defined as follows.

##### 3.5.4.1.3.6.2.1 Monitor Movement Minimum End Time [Deprecated]

Upon request from a management station, the ASC shall return the time point of earliest end time for the current movement state (e.g., at the end of a permissive green or at the end of a permissive yellow) at an intersection. If the duration of the current state of a movement is fixed, this value indicates the end time. This value can be viewed as the earliest possible time point at which the current interval could change, except when unpredictable events relating to a preemption or priority call come into play and disrupt a currently active timing plan. The time point is measured in tenths of a second in the current or next hour.

> Note: This requirement was deprecated in NTCIP 1202 v03B and replaced by a new requirement, 3.5.4.1.3.6.2.6, Monitor Movement Minimum End Time V2, which associates the movement with a signal group instead of a channel and supports leap seconds.

Do Not Copy Without Written Permission © 2023 AASHTO / ITE / NEMA

#### 3.5.4.1.3.6.2.2 Monitor Movement Maximum End Time [Deprecated]

Upon request from a management station, the ASC shall return the latest possible end time point of the current movement state (e.g., at the end of a protected green or end of a steady red) at an intersection. This value can be viewed as the latest possible time point at which the current interval could change, except when unpredictable events relating to a preemption or priority call come into play and disrupt a currently active timing plan. The time point is measured in tenths of a second in the current or next hour.

> Note: This requirement was deprecated in NTCIP 1202 v03B and replaced by a new requirement, 3.5.4.1.3.6.2.7, Monitor Movement Maximum End Time V2, which associates the movement with a signal group instead of a channel and supports leap seconds.

#### 3.5.4.1.3.6.2.3 Monitor Movement Likely End Time [Deprecated]

Upon request from a management station, the ASC shall return the time point when the current movement state will most likely end (e.g., at the end of a protected green or end of a steady red) at an intersection. The likely end time point may be predicted based on data available to the ASC. The time point is measured in tenths of a second in the current or next hour.

> Note: This requirement was deprecated in NTCIP 1202 v03B and replaced by a new requirement, 3.5.4.1.3.6.2.8, Monitor Movement Likely End Time V2, which associates the movement with a signal group instead of a channel and supports leap seconds.

#### 3.5.4.1.3.6.2.4 Monitor Movement Likely End Time Confidence [Deprecated]

Upon request from a management station, the ASC shall return the statistical confidence that the reported likely end time for the current movement state (e.g., at the end of a protected green or end of a permissive clearance time) at an intersection is accurate. The confidence value is measured as a probability class, as defined by DE_TimeIntervalConfidence in SAE J2735.

> Note: This requirement was deprecated in NTCIP 1202 v03B and replaced by a new requirement, 3.5.4.1.3.6.2.9, Monitor Movement Likely End Time Confidence V2, which associates the movement with a signal group instead of a channel and supports leap seconds.

#### 3.5.4.1.3.6.2.5 Monitor Movement Next Occurrence [Deprecated]

Upon request from a management station, the ASC shall return the estimated time point when a pending (i.e., currently stopped) movement at an intersection is next allowed to proceed. The time point is measured in tenths of a second in the current or next hour. The estimated time point is provided only when the movement state is not allowed to proceed (i.e., a value of undefined is returned when the movement is allowed to proceed, such as during a green or flashing-red interval). This requirement is used to support ECO-driving applications.

> Note: This requirement was deprecated in NTCIP 1202 v03B and replaced by a new requirement, 3.5.4.1.3.6.2.10, Monitor Movement Next Occurrence V2, which associates the movement with a signal group instead of a channel and supports leap seconds.

#### 3.5.4.1.3.6.2.6 Monitor Movement Minimum End Time V2

Upon request from a management station, the ASC shall return the time point of earliest end time for the current movement state (e.g., at the end of a permissive green or at the end of a permissive yellow) of a movement at an intersection. If the duration of the current state of a movement is fixed, this value indicates the end time. This value can be viewed as the earliest possible time point at which the current interval could change, except when unpredictable events relating to a preemption or priority call come into play and disrupt a currently active timing plan. The time point is measured in tenths of a second in the current or next hour.

© 2023 AASHTO / ITE / NEMA Do Not Copy Without Written Permission

#### 3.5.4.1.3.6.2.7 Monitor Movement Maximum End Time V2

Upon request from a management station, the ASC shall return the latest possible end time point of the current movement state (e.g., at the end of a protected green or end of a steady red) of a movement at an intersection. This value can be viewed as the latest possible time point at which the current interval could change, except when unpredictable events relating to a preemption or priority call come into play and disrupt a currently active timing plan. The time point is measured in tenths of a second in the current or next hour.

#### 3.5.4.1.3.6.2.8 Monitor Movement Likely End Time V2

Upon request from a management station, the ASC shall return the time point when the current movement state of a movement will most likely end (e.g., at the end of a protected green or end of a steady red) at an intersection. The likely end time point may be predicted based on data available to the ASC. The time point is measured in tenths of a second in the current or next hour.

#### 3.5.4.1.3.6.2.9 Monitor Movement Likely End Time Confidence V2

Upon request from a management station, the ASC shall return the statistical confidence that the reported likely end time for the current movement state (e.g., at the end of a protected green or end of a permissive clearance time) of a movement at an intersection is accurate. The confidence value is measured as a probability class, as defined by DE_TimeIntervalConfidence in SAE J2735.

#### 3.5.4.1.3.6.2.10 Monitor Movement Next Occurrence V2

Upon request from a management station, the ASC shall return the estimated time point when a movement at an intersection is next allowed to proceed (i.e., the movement phase state will be permissive-Movement-Allowed or protected-Movement-Allowed). The time point is measured in tenths of a second in the current or next hour. This value can be viewed as the estimated time point at which the movement is next allowed to proceed, except when unpredictable events relating to a preemption or priority call come into play and disrupt a currently active timing plan. A value of undefined is returned when the time point cannot be estimated with a high level of confidence. This requirement is used to support ECO-driving applications.

#### 3.5.4.1.3.6.2.11 Monitor Next Movement Minimum End Time

Upon request from a management station, the ASC shall return the time point of the earliest possible end of the movement state immediately after the current movement state at the intersection. If the duration of the next movement state is fixed, this value indicates the end time point. This value can be viewed as the earliest possible time point at which the next interval could end, except when unpredictable events relating to a preemption or priority call come into play and disrupt a currently active timing plan. The time point is measured in tenths of a second in the current or next hour. If the next movement state is unknown, the time point of the earliest possible end time is also unknown.

#### 3.5.4.1.3.6.2.12 Monitor Next Movement Maximum End Time

Upon request from a management station, the ASC shall return the time point of the latest possible end of the movement state immediately after the current movement state for the same signal group at the intersection. This value can be viewed as the latest possible time point at which the next movement state could end, except when unpredictable events relating to a preemption or priority call come into play and disrupt a currently active timing plan. The time point is measured in tenths of a second in the current or next hour. If the next movement state is unknown, the time point of the latest possible end time is also unknown.

Do Not Copy Without Written Permission © 2023 AASHTO / ITE / NEMA

When the interval duration of the next movement state is fixed, such as when the ASC is operating in fixed time or the yellow interval duration, the minimum end time will equal the maximum end time.

#### 3.5.4.1.3.6.2.13 Monitor Next Movement Start Time

Upon request from a management station, the ASC shall return the time point, in tenths of a second in the current or next hour, of the next (future) movement state to follow the current movement state for a signal group. If the start time is unknown, a value of unknown is used. If the next movement state is unknown, the start time will also be unknown. If the next movement state is known, the start time is equal to the movement minimum end time of the current interval.

> Note: Start time is always a future time (see CTI 4501, Section 3.3.3.3.5.6 and 3.3.3.3.5.7). Thus, the start time of the current interval is NOT provided.

#### 3.5.4.1.3.6.2.14 Determine Maximum Number of Movement Events

Upon request from a management station, the ASC shall return the number of movement events for each signal group supported. CTI 4501 requires that at least two movement events be supported—the first movement event represents the current interval and the second movement event represents the next interval (after the current interval). The SAE J2735 SPaT message supports up to 16 movement events for each signal group.

### 3.5.4.1.3.6.3 Configure Movement Assistance Requirements

The SPaT message in SAE J2735 can also provide potential pedestrian or bicyclist conflicts and queuing information to travelers. The requirements to configure detectors to provide this information to travelers wishing to traverse through the intersection are defined as follows.

#### 3.5.4.1.3.6.3.1 Configure Queue Detectors for Movement Assistance [Deprecated]

Upon request from a management station, the ASC shall store the identifiers of the vehicle detectors that provide queue information for a specific movement through the intersection. This queue information, measured in meters, is provided so connected vehicles are aware of how many vehicles are queued, if any, for a specific movement through the intersection.

> Note: This requirement was deprecated in NTCIP 1202 v03B and replaced by a new requirement, 3.5.4.1.3.6.3.4, Configure Queue Detectors for Movement Assistance V2, which associates a movement with a signal group ID (and with a connection in the MAP message) instead of a channel.

#### 3.5.4.1.3.6.3.2 Configure Pedestrian Detectors for Movement Assistance [Deprecated]

Upon request from a management station, the ASC shall store the identifiers of the pedestrian presence inputs indicating the potential presence of pedestrians that conflict with a specific vehicle movement through the intersection. This information is provided so connected vehicles are aware that a pedestrian may conflict with its movement through the intersection.

> Note: This requirement was deprecated in NTCIP 1202 v03B and replaced by a new requirement, 3.5.4.1.3.6.3.5, Configure Pedestrian Detectors for Movement Assistance V2, which associates a movement with a signal group ID instead of a channel.

#### 3.5.4.1.3.6.3.3 Configure Bicycle Detectors for Movement Assistance [Deprecated]

Upon request from a management station, the ASC shall store the identifiers of the bicycle detectors that determine the presence of bicyclists that conflict with a specific vehicle movement through the

© 2023 AASHTO / ITE / NEMA Do Not Copy Without Written Permission

intersection. This information is provided so connected vehicles are aware that a bicyclist may conflict with its movement through the intersection.

> Note: This requirement was deprecated in NTCIP 1202 v03B and replaced by a new requirement, 3.5.4.1.3.6.3.6, Configure Bicycle Detectors for Movement Assistance V2, which associates a movement with a signal group ID instead of a channel.

#### 3.5.4.1.3.6.3.4 Configure Queue Detectors for Movement Assistance V2

Upon request from a management station, the ASC shall store the identifiers of the vehicle detectors that provide queue information for a specific movement through the intersection. This queue information, measured in meters, is provided so connected vehicles are aware of how many vehicles are queued, if any, for a specific movement through the intersection.

#### 3.5.4.1.3.6.3.5 Configure Pedestrian Detectors for Movement Assistance V2

Upon request from a management station, the ASC shall store the identifiers of the pedestrian presence inputs indicating the potential presence of pedestrians that conflict with a specific vehicle movement through the intersection. This information is provided so connected vehicles are aware that a pedestrian may conflict with its movement through the intersection.

#### 3.5.4.1.3.6.3.6 Configure Bicycle Detectors for Movement Assistance V2

Upon request from a management station, the ASC shall store the identifiers of the bicycle detectors that determine the presence of bicyclists that conflict with a specific vehicle movement through the intersection. This information is provided so connected vehicles are aware that a bicyclist may conflict with its movement through the intersection.

### 3.5.4.1.3.6.4 Retrieve Movement Assistance Requirements

The requirements to provide potential pedestrian or bicyclist conflicts and queuing information to assist connected vehicles traversing through the intersection are defined as follows.

#### 3.5.4.1.3.6.4.1 Monitor Lane Connection Queue Length [Deprecated]

Upon request from a management station, the ASC shall return the distance, in meters, from the stop line of the approach lane to the back edge of the last vehicle in the queue, as measured along the center line of the lane for a specific movement maneuver through the intersection. Valid values are 0 to 10000 meters, where 0 indicates no queue or the queue distance is unknown, and 10000 represents all distance ≥ 10,000 meters. The detectors that provide this queue information is configured in Section 3.5.4.1.3.6.3.1.

> Note: This requirement was deprecated in NTCIP 1202 v03B and replaced by a new requirement, 3.5.4.1.3.6.4.6, Monitor Lane Connection Queue Length V2, which associates a movement with a signal group ID instead of a channel.

#### 3.5.4.1.3.6.4.2 Monitor Lane Connection Available Storage Length [Deprecated]

Upon request from a management station, the ASC shall return the distance, in meters, from the stop line of the approach lane to a given distance within which vehicles has a high probability for successfully executing a specific movement maneuver during the current cycle through the intersection. This requirement is used to enhance the awareness of vehicles to anticipate if they can pass the stop line of the lane. Used for optimizing the green wave, due to knowledge of vehicles waiting in front of a red light (downstream). Valid values are 0 to 10000 meters, where 0 indicates no queue or the queue distance is unknown, and 10000 represents all distance ≥ 10,000 meters.

Do Not Copy Without Written Permission © 2023 AASHTO / ITE / NEMA

Note: This requirement was deprecated in NTCIP 1202 v03B by the ASC WG because the controller is unable to provide the required value at this time.

#### 3.5.4.1.3.6.4.3 Monitor Lane Connection Stop Line Wait [Deprecated]

Upon request from a management station, the ASC shall return if vehicles for a specific movement maneuver through the intersection have to stop on the stop line and not enter the intersection. This value is either on or off, with on indicating vehicles should stop on the stop line. An ASC may provide this information if it determines that a vehicle is unable to clear the intersection because of traffic congestion on the egress lane for the movement maneuver.

Note: This requirement was deprecated in NTCIP 1202 v03B by the ASC WG because the controller is unable to provide the required value at this time.

#### 3.5.4.1.3.6.4.4 Monitor Lane Connection Traveler Detection [Deprecated]

Upon request from a management station, the ASC shall return if any conflicting pedestrians or bicycles are detected for a specific movement maneuver through the intersection. This value is either on or off, with off indicating a high certainty that there is no pedestrian or bicycle present. The presence inputs that indicate if a conflicting pedestrian or bicyclist may be present is configured in Sections 3.5.4.1.3.6.3.2 and 3.5.4.1.3.6.3.3.

Note: This requirement was deprecated in NTCIP 1202 v03B and replaced by a new requirement, 3.5.4.1.3.6.4.7, Monitor Lane Connection Traveler Detection V2, which associates a movement with a signal group ID instead of a channel.

#### 3.5.4.1.3.6.4.5 Monitor Lane Connection State [Deprecated]

Upon request from a management station, the ASC shall return the overall current state of a specific movement maneuver at the intersection. The valid states are defined by DE_MovementPhaseState in SAE J2735.

Note: This requirement was deprecated in NTCIP 1202 v03B and replaced by new requirements that associate a movement with a signal group ID instead of a channel.

#### 3.5.4.1.3.6.4.6 Monitor Lane Connection Queue Length V2

Upon request from a management station, the ASC shall return the distance, in meters, from the stop line of the approach movement to the back edge of the last vehicle in the queue, as measured along the center line of the lane for a specific movement maneuver through the intersection. Valid values are 0 to 10000 meters, where 0 indicates no queue or the queue distance is unknown, and 10000 represents all distance ≥ 10,000 meters. The detectors that provide this queue information are configured in Section 3.5.4.1.3.6.3.4.

#### 3.5.4.1.3.6.4.7 Monitor Lane Connection Traveler Detection V2

Upon request from a management station, the ASC shall return if any conflicting pedestrians or bicycles are detected for a specific movement maneuver through the intersection. This value is either on or off, with off indicating a high certainty that there is no pedestrian or bicycle present. The presence inputs that indicate if a conflicting pedestrian or bicyclist may be present are configured in Sections 3.5.4.1.3.6.3.5 and 3.5.4.1.3.6.3.6.

© 2023 AASHTO / ITE / NEMA Do Not Copy Without Written Permission

#### 3.5.4.1.3.6.5 Manage Advisory Speed Requirements

The SPaT message in SAE J2735 can also provide speed advisories for specific movements and specific vehicle types. The requirements to provide advisory speed information for a movement through the intersection are defined as follows.

##### 3.5.4.1.3.6.5.1 Configure Advisory Speed Type [Deprecated]

Upon request from a management station, the ASC shall store the type of speed advisory for a specific movement traversing the intersection. Valid types of speed advisories are defined by DE_AdvisorySpeedType in SAE J2735. Speed advisories may be configured for specific vehicle types (see Section 3.5.4.2.1.1.9).

> Note: This requirement was deprecated in NTCIP 1202 v03B and replaced by a new requirement, 3.5.4.1.3.6.5.6, Configure Advisory Speed Type V2, which associates a movement with a signal group ID instead of a channel.

##### 3.5.4.1.3.6.5.2 Configure Advisory Speed [Deprecated]

Upon request from a management station, the ASC shall store the advisory speed, in tenths of a meter per second, provided for a specific movement traversing the intersection. Speed advisories may be configured for specific advisory speed types or vehicle types (see Section 3.5.4.2.1.1.9).

> Note: This requirement was deprecated in NTCIP 1202 v03B and replaced by a new requirement, 3.5.4.1.3.6.5.7, Configure Advisory Speed V2, which associates a movement with a signal group ID instead of a channel.

##### 3.5.4.1.3.6.5.3 Configure Advisory Speed Zone [Deprecated]

Upon request from a management station, the ASC shall store the distance, in meters, upstream from the stop bar that a speed advisory is recommended for a movement traversing the intersection. A value of 10000 indicates that the distance is 10,000 meters or greater. Speed advisories may be configured for specific vehicle types (see Section 3.5.4.2.1.1.9).

> Note: This requirement was deprecated in NTCIP 1202 v03B and replaced by a new requirement, 3.5.4.1.3.6.5.8, Configure Advisory Speed Zone V2, which associates a movement with a signal group ID instead of a channel.

##### 3.5.4.1.3.6.5.4 Configure Advisory Speed Vehicle Type [Deprecated]

Upon request from a management station, the ASC shall store the vehicle type that a speed advisory is recommended for a specific movement traversing the intersection. The vehicle type(s) is identified as part of the MAP data (see 3.5.4.2.1.1.9). If no vehicle type is identified, then the advisory speed applies to all vehicles.

> Note: This requirement was deprecated in NTCIP 1202 v03B and replaced by a new requirement, 3.5.4.1.3.6.5.9, Configure Advisory Speed Vehicle Type V2, which associates a movement with a signal group ID instead of a channel.

##### 3.5.4.1.3.6.5.5 Retrieve Advisory Speed Confidence Level [Deprecated]

Upon request from a management station, the ASC shall return a confidence value for a speed advisory provided for a specific movement traversing the intersection. Valid values for speed confidence are defined by DE_SpeedConfidence in SAE J2735.

Do Not Copy Without Written Permission © 2023 AASHTO / ITE / NEMA

Note: This requirement was deprecated in NTCIP 1202 v03B because at this time it is unclear how a controller would calculate confidence level.

#### 3.5.4.1.3.6.5.6 Configure Advisory Speed Type V2

Upon request from a management station, the ASC shall store the type of speed advisory for a specific movement traversing the intersection. Valid types of speed advisories are defined by DE_AdvisorySpeedType in SAE J2735. Speed advisories may also be configured for specific vehicle types as defined in the MAP message for the intersection.

#### 3.5.4.1.3.6.5.7 Configure Advisory Speed V2

Upon request from a management station, the ASC shall store the advisory speed, in tenths of a meter per second, provided for a specific movement traversing the intersection. Speed advisories may be configured for specific advisory speed types (see 3.5.4.1.3.6.5.6) or vehicle types as defined in the MAP message for the intersection.

#### 3.5.4.1.3.6.5.8 Configure Advisory Speed Zone V2

Upon request from a management station, the ASC shall store the distance, in meters, upstream from the stop bar for which a speed advisory is recommended for a movement traversing the intersection. A value of 10000 indicates that the distance is 10,000 meters or greater.

#### 3.5.4.1.3.6.5.9 Configure Advisory Speed Vehicle Type V2

Upon request from a management station, the ASC shall store the vehicle type for which a speed advisory is recommended for a specific movement traversing the intersection. The vehicle type(s) is identified in the associated MAP message for the intersection. If no vehicle type is identified, then the advisory speed applies to all vehicles.

### 3.5.4.1.3.6.6 Monitor Movement Status [Deprecated]

Upon request from a management station, the ASC shall return the movement data containing what vehicle (or pedestrian) movements are permitted and when at an intersection in a compressed manner. The connected vehicle environment is expected to have limitations in the data rates and data capacity. This requirement allows the ASC to group sets of data so that the data can be transmitted more efficiently.

Note: This requirement was deprecated in NTCIP 1202 v03B.

### 3.5.4.1.3.6.7 Monitor Lane Connection Maneuver Status [Deprecated]

Upon request from a management station, the ASC shall return the status of each lane connection at the intersection in a compressed manner. The connected vehicle environment is expected to have limitations in the data rates and data capacity. This requirement allows the ASC to group sets of data so that the data can be transmitted more efficiently.

Note: This requirement was deprecated in NTCIP 1202 v03B.

### 3.5.4.1.3.6.8 Monitor Movement State V2

Upon request from a management station, the ASC shall return the current movement phase state of a movement at the intersection. The valid states are defined by DE_MovementPhaseState in SAE J2735. If the movement state is not known with a high level of confidence, a value of unavailable is used.

© 2023 AASHTO / ITE / NEMA Do Not Copy Without Written Permission

#### 3.5.4.1.3.6.9 Monitor Next Movement State

Upon request from a management station, the ASC shall return the movement state immediately after the current movement state of a movement at the intersection. The valid states are defined by DE_MovementPhaseState in SAE J2735. If the next movement state is not known with a high level of confidence, a value of unavailable is used.

#### 3.5.4.1.3.6.10 Monitor Movement Status V2

Upon request from a management station, the ASC shall return the movement data containing what vehicle (or pedestrian) movements are permitted and when at an intersection in a compressed manner. The connected vehicle environment is expected to have limitations in the data rates and data capacity. This requirement allows the ASC to group sets of data so that the data can be transmitted more efficiently.

### 3.5.4.1.3.7 Manage Enabled Lane Requirements

The SPaT message in SAE J2735 can also indicate to travelers traversing across the intersection which revocable lanes at the intersection are currently active (enabled). Each lane defined for a roadway geometry plan can be defined as a revocable lane—that is, the lane is not always active for a specific use.

For example, a shoulder lane may be used by vehicles during rush hours and closed to vehicle traffic during all other times. In the roadway geometry (MAP) plan for the intersection, that shoulder lane can be defined as a vehicle lane and as revocable. During rush hours, the SPaT message would then indicate that the shoulder lane is active (Enabled) by including the lane identifier (of the shoulder lane). During non-rush hours, the SPaT message would not include the lane identifier of the shoulder lane, indicating that the shoulder lane is not active (enabled).

The requirements to configure and command enabled (revocable) lanes are defined as follows.

#### 3.5.4.1.3.7.1 Configure Concurrent Enabled Lanes

Upon request from a management station, the ASC shall store what revocable lanes are allowed to be active (enabled) concurrently. This requirement allows the management station to set which revocable lane(s) may be active (enabled) at the same time, thereby preventing the enabling of conflicting revocable lanes.

#### 3.5.4.1.3.7.2 Configure Enabled Lanes for a Pattern [Deprecated]

Upon request from a management station, the ASC shall store if a revocable lane is active (enabled) or inactive for a signal timing pattern. This requirement sets if the signal phase and timing data provided to a CV Roadside Process should indicate if a revocable lane is enabled or not when the signal timing pattern is in effect.

> Note: This requirement was deprecated in NTCIP 1202 v03B and replaced by a new requirement, 3.5.4.1.3.7.4, Configure Enabled Lanes by Time of Day, which configures the enabled lane(s) by time of day instead of by pattern.

#### 3.5.4.1.3.7.3 Command Enabled Lanes [Deprecated]

Upon request from a management station, the ASC shall store if a revocable lane is active (enabled) or inactive. This requirement allows a management station to remotely command if the signal phase and timing data provided to a CV Roadside Process should indicate if a revocable lane is enabled or not.

Do Not Copy Without Written Permission © 2023 AASHTO / ITE / NEMA

Note: This requirement was deprecated in NTCIP 1202 v03B and replaced by a new requirement, 3.5.4.1.3.7.6, Command Enabled Lanes V2, which resets the enabled lane(s) by time of day instead of by pattern.

#### 3.5.4.1.3.7.4 Configure Enabled Lanes by Time of Day

Upon request from a management station, the ASC shall store if a revocable lane is active (enabled) or inactive based on a time base schedule. This requirement allows a management station to set a group of enabled lanes based on a schedule.

#### 3.5.4.1.3.7.5 Determine Lanes Enabled

Upon request from a management station, the ASC shall return the revocable lanes that are currently enabled (active).

#### 3.5.4.1.3.7.6 Command Enabled Lanes V2

Upon request from a management station, the ASC shall store if a set of revocable lanes is active (enabled) or inactive. This requirement allows a management station to remotely command, if the signal phase and timing data provided to a CV Roadside Process to indicate which revocable lane(s) are enabled or not. The set of revocable lanes is defined in Section 3.5.4.1.3.7.1, Configure Concurrent Enabled Lanes. This command may override the set of enabled lanes in the schedule.

#### 3.5.4.1.3.8 Configure Movement Type [Deprecated]

Upon request from a management station, the ASC shall store the possible movement states for a movement (for a channel) at the intersection. The valid states are defined by DE_MovementPhaseState in SAE J2735.

Note: This requirement was deprecated in NTCIP 1202 v03B and replaced by new requirements that associates a movement with a signal group ID instead of a channel.

#### 3.5.4.1.3.9 Configure Lane Connection Type [Deprecated]

Upon request from a management station, the ASC shall store the possible movement states for a lane connection at the intersection. The valid states are defined by DE_MovementPhaseState in SAE J2735.

Note: This requirement was deprecated in NTCIP 1202 v03B and replaced by new requirements that associates a movement with a signal group ID instead of a channel.

#### 3.5.4.1.3.10 Enable Signal Phase and Timing Data Exchange

Upon request from a management station, the ASC shall store if the controller unit can exchange signal phase and timing data for the intersection(s) with an RSU port. An ASC may provide SPaT data to more than one RSU (or CV Roadside Process). This requirement allows a management station to control which RSU port(s) the ASC can share SPaT data with.

#### 3.5.4.1.3.11 Configure Road Authority

Upon request from a management station, the ASC shall store the unique identifier of the agency that operates and/or maintains the intersection or the ASC. The unique identifier is an object identifier as defined by DF_RoadAuthorityID in SAE J2735. In the U.S., this object identifier allows use consisting of the Geographic Names Information System (GNIS) codes maintained by the U.S. Geological Survey (USGS).

© 2023 AASHTO / ITE / NEMA Do Not Copy Without Written Permission

#### 3.5.4.1.3.12 Retrieve Signal Phase and Timing Intersection Status Requirements

Upon request from a management station, the ASC shall return the status of the ASC as part of the signal phase and timing data broadcasted to connected devices. The intersection status values are defined by DE_IntersectionStatusObject in SAE J2735.

##### 3.5.4.1.3.12.1 Monitor Manual Control Indication

Upon request from a management station, the ASC shall return if the intersection is operating under manual control. Manual Control indicates to the receiver of this information that the controller is "not in control," thus the controller generally does not know when the movement phase state will change. The ASC is under manual control when it receives a Manual Control Enabled (MCE) command or Manual Advance input (e.g., from a police pickle). Whether the ASC is under manual control is updated accordingly to be consistent with the current set of possible dwell/advance options. The Minimum End Time and Maximum End Time are adjusted accordingly.

##### 3.5.4.1.3.12.2 Monitor Stop Indication

Upon request from a management station, the ASC shall return if the intersection is operating under stop time. Stop Time indicates to the receiver of this information that all counting/timing by the controller has stopped, thus most TimeChangeDetails are unknown. The ASC is under stop time when it receives a stop time input. The active (frozen) controller state on the affected (stopped) ring remains the basis to determine the MovementPhaseState for each movement and the TimeChangeDetails. When in stop time, the stop time duration is unknown; however, the TimeChangeDetails will remain consistent to the current phase timers. If the form of stop time input allows continuation of countdown timers for clearance intervals or other timers, the TimeChangeDetails are adjusted accordingly.

##### 3.5.4.1.3.12.3 Monitor Failure Flash Indication

Upon request from a management station, the ASC shall return if the intersection is in a failure flash condition. Stop Time indicates to the receiver of this information that all counting/timing by the controller has stopped, thus most TimeChangeDetails are unknown. A failure flash condition is any type of flash that must be terminated by a source external to the controller. There are three types of failure flash.

- "Monitor Flash" is a Flash controlled by the monitor in the following two scenarios:
    - When resuming operation after a power loss or interruption, the monitor keeps the Flash Bus energized for a minimum of 6 seconds before energizing the Signal Bus and transferring control to the controller.
    - When a fault is detected by the monitor, it energizes the Flash Bus until either the fault is cleared by pressing the Reset button on the monitor (latching fault) or, with certain types of faults, when the condition that caused the fault is no longer present (non-latching fault).
- "Fault Monitor Flash" occurs when the controller detects an anomaly in the TSC Infrastructure, such as a mismatch between its copy of the permissive channels and the monitor's copy of the permissive channels.
- "Local Flash" is a flash controlled by human-operated switches in the cabinet, typically labeled "AUTO/FLASH," that is used by technicians to flash the signals when performing maintenance on the controller (Tech Flash) or by police during unusual traffic conditions or situations (Police Flash).

The end of Failure Flash is indeterminate because the ASC does not know when the monitor is going to be reset or when the flash switch is going to be moved from "FLASH" to "AUTO." Therefore, the TimeChangeDetails during Failure Flash cannot be supplied.

> Note: It is more important for SPaT to match the roadway signalization rather than internal controller logic. Some cabinet variations do not have flash sense inputs. The ASC Working Group recommends agencies to ensure flash sense inputs are mapped into the ASC. ASCs that cannot

 © 2023 AASHTO / ITE / NEMA

determine if cabinet flash is active are PROHIBITED from providing any SPaT data to the RSU. See Section F.3.3.4.3 for additional notes about a Failure Flash Indication.

#### 3.5.4.1.3.12.4 Monitor Preemption Operation Indication

Upon request from a management station, the ASC shall return if the intersection is operating in Active Preemption Control. Preempt Control indicates to the receiver of this information that the controller is actively servicing a preemption request. The TimeChangeDetails are generated under assumption that any inactive preemption, NTCIP 1211, or SRM requests remain inactive and any active priority requests remain active until served.

#### 3.5.4.1.3.12.5 Monitor Priority Operation Indication

Upon request from a management station, the ASC shall return if the intersection is operating in Active Priority Control. Priority Control indicates to the receiver of this information that the controller is actively servicing a priority request and thus, the TimeChangeDetails for the intersection may suddenly change as the controller changes from "normal" operations to servicing a priority request as the controller transitions to serve the movement requested. The TimeChangeDetails are generated under assumption that any inactive priority, NTCIP 1211, or SRM requests remain inactive and any active priority requests remain active until served.

#### 3.5.4.1.3.12.6 Monitor Fixed Time Control Indication

Upon request from a management station, the ASC shall return if the intersection is operating under fixed time control. Fixed Time Operation indicates to the receiver of this information that the controller is operating in fixed time and thus the values in TimeChangeDetails are not dynamically changing cycle by cycle.

#### 3.5.4.1.3.12.7 Monitor Non-Fixed Time Control Indication

Upon request from a management station, the ASC shall return if the intersection is operating under Active Demand. Active Demand, also called traffic dependent operation, indicates to the receiver of this information that the controller is operating based on different levels of traffic parameters (requests, duration of gaps, or more complex parameters), and not a fixed time mode.

The TimeChangeDetails are generated under assumption of any active demand for phase or pedestrian service. This demand can be sourced from cabinet inputs, central system commands, controller configuration, internal logic, or various other means. The TimeChangeDetails are generated upon current demand (Phase/Pedestrian calls) and updated within one second upon changes to this demand.

Note: Demand need not be actively serviceable to be considered in the SPaT message. For example, a coordinator may omit a phase until its permissive window opens; however, SPaT is to consider this phase to have serviceable demand with expectation of future opening of this permissive window.

#### 3.5.4.1.3.12.8 Monitor Standby Operation Indication

Upon request from a management station, the ASC shall return if the intersection is operating in a soft flash operation (flash through phase load switch), and the end of the flash condition is determinate at some point by the controller. StandbyOperation indicates that the controller is in a flashing condition but the controller will be aware of when the controller will exit the flashing condition. Standby operations include startup flash, automatic flash, and preempt flash. See Section F.3.3.4.8 for additional notes about a Standby Operation Indication.

© 2023 AASHTO / ITE / NEMA Do Not Copy Without Written Permission

#### 3.5.4.1.3.12.9 Monitor Controller Failure

Upon request from a management station, the ASC shall return if the intersection is in a failure mode. Failure Mode indicates to the receiver of this information that the controller is not operating properly or has failed. Examples of a controller failure mode include a process in the controller that is not operating properly, a memory data error was detected, or an internal voltage failure was detected. Most failures will be fatal and would not result in this bit being SET, but for non-catastrophic failures, this bit can be set and the controller would likely activate cabinet flash.

#### 3.5.4.1.3.12.10 Monitor MAP Message Validity

Upon request from a management station, the ASC shall return if the controller is indicating that the MAP message for this intersection should be marked as valid or invalid. The controller may allow an authorized user to indicate that the MAP message for the intersection is invalid because the signalized intersection is under test, or because there is temporary work at the signalized intersection, such as lane closures, that may make the MAP message invalid.

#### 3.5.4.1.3.12.11 Monitor SPaT Data Validity

Upon request from a management station, the ASC shall return if the controller is providing valid or invalid SPaT data for the intersection. The controller may be providing invalid SPaT data that is not to be used if the signalized intersection is under test, or if there is temporary work at the signalized intersection, such as lane closures, that may make the SPaT data invalid.

#### 3.5.4.1.3.13 Mark SPaT Invalid—Controller

Upon request from a management station, the ASC shall store an indication if the SPaT data being provided by the controller is valid or not, i.e., whether the SPaT data is to be used or not. Situations when the SPaT data may be invalid include when the signalized intersection is under test, or if there is temporary construction at the signalized intersection such that the SPaT data should be ignored.

#### 3.5.4.1.3.14 Mark SPaT Invalid—Port

Upon request from a management station, the ASC shall store an indication if the SPaT data being provided by the controller to a specific RSU port is valid or not, i.e., whether the SPaT data is to be used or not. Situations when the SPaT data may be invalid include when the signalized intersection is under test. Unlike 3.5.4.1.3.13, Mark SPaT Invalid—Controller, this requirement allows the SPaT data to be marked invalid for a specific CV Roadside Process (e.g., RSU).

#### 3.5.4.1.3.15 Mark MAP Message Invalid—Controller

Upon request from a management station, the ASC shall store an indication if the MAP message associated with the signalized intersection controlled by the controller is valid or not, i.e., whether the MAP message is to be used or not. Situations when the MAP message may be invalid include when the signalized intersection is under test, or if there is temporary construction at the signalized intersection such that the MAP message should be ignored.

The MAP message is generally broadcasted by the CV Roadside Process but the indication on whether a MAP message is valid is contained in the SPaT message and the controller is the primary source of the data for the SPaT message. From a field maintenance perspective, the field maintenance personnel generally have easier access to the traffic controller than the RSU, and are likely to indicate if the SPaT data is valid or invalid. Thus, this requirement allows the field maintenance personnel to indicate whether the SPaT and MAP messages are valid or invalid from the same device (the controller).

Do Not Copy Without Written Permission © 2023 AASHTO / ITE / NEMA

#### 3.5.4.1.3.16 Mark MAP Message Invalid—Port

Upon request from a management station, the ASC shall store an indication if the MAP message broadcasted by a specific CV Roadside Process data is valid or invalid, i.e., whether the MAP message is to be used or not. Situations when the MAP message may be invalid include when the signalized intersection is under test. Unlike 3.5.4.1.3.15, Mark MAP Message Invalid—Controller, this requirement allows the MAP message to be marked invalid for a specific CV Roadside Process (e.g., RSU).

#### 3.5.4.1.3.17 Manage Signal Group Requirements

The following requirements are for managing signal groups for use in connected intersections. The signalGroupID is used in SAE J2735 to associate every active movement in a given intersection to a designated collection of one or more lanes of a common type (defined in a MAP message).

##### 3.5.4.1.3.17.1 Determine Maximum Number of Signal Groups

Upon request from a management station, the ASC shall return the maximum number of signal groups that can be configured by the ASC.

##### 3.5.4.1.3.17.2 Configure Signal Group Intersection Mapping

Upon request from a management station, the ASC shall store the signal groups and intersection identifiers in use for the intersection.

##### 3.5.4.1.3.17.3 Configure Signal Group Control Source

Upon request from a management station, the ASC shall store the phase or overlap that controls the signal group.

##### 3.5.4.1.3.17.4 Configure Signal Group Indication Types

Upon request from a management station, the ASC shall store the type of Green and Red to be indicated for the signal group in a SPaT message. Valid values for Green types are preMovement, permissiveMovementAllowed, protectedMovementAllowed, and protected-or-permissive. Valid values for Red types are stopThenProceed, and stopAndRemain.

##### 3.5.4.1.3.17.5 Configure Signal Group Permissive Control Source

Upon request from a management station, the ASC shall store the phase or overlap that determines if the signal group indication is a protected or permissive movement. If the green type for the signal group is not protected-or-permissive, then this requirement is ignored.

##### 3.5.4.1.3.17.6 Configure Signal Group Lanes

Upon request from a management station, the ASC shall store the set of revocable lane(s) that activates a signal group when the set of revocable lane(s) is enabled and deactivates a signal group when revoked. The set of revocable lanes is defined in Section 3.5.4.1.3.7.1, Configure Concurrent Enabled Lanes. If the signal group is enabled, then the movement state for the signal group is included in the SPaT data provided to a CV Roadside Process.

##### 3.5.4.1.3.17.7 Determine Maximum Number of Signal State Entries

Upon request from a management station, the ASC shall return the number of signal state entries supported by the ASC.

© 2023 AASHTO / ITE / NEMA Do Not Copy Without Written Permission

#### 3.5.4.1.3.17.8 Configure Signal State Parameters

Upon request from a management station, the ASC shall store parameters to determine what signal state as defined by DE_MovementPhaseState in SAE J2725 shall be indicated in a SPaT message.

#### 3.5.4.1.3.18 Retrieve Signal Phase and Timing Time Point V2

Upon request from a management station, the ASC shall return the time points for the movement start/end times reported in the signal phase and timing data. Time points are in ticks, each tick representing units of tenths of a second, with a value of 0 representing the top of the hour, resulting in a range of 0 to 35999, and a range of 36000 to 36009 during leap seconds. These time points do not need to be synchronized with UTC time or the RSU time.

This requirement allows a TMC operator to view the controller's current time in ticks. Many signal controllers use AC line frequency to determine their internal time—this has the benefit that all signal controllers that use the same line frequency, such as along an arterial, remain synchronized for signal timing coordination. Therefore, the representation of movement start/end time points in the future should not depend on the ASC system time being synchronized with NIST UTC time or being synchronized with the RSU system time.

However, for a connected environment, it is important that all connected devices use time from a known and reliable source. In this context, a reliable source is defined as a time source whose accuracy is known and acceptable. For the purposes of this discussion, the time from a reliable source will be called **disciplined time**—that is, it "does not accumulate any offset over time." The RSU, which is expected to have access to a time source with disciplined time, can then convert these time points (and the movement start/end times) into time marks in disciplined time.

### 3.5.4.2 Manage Management Station – CV Roadside Process Interface Requirements [Deprecated]

The management station for the Management Station – CV Roadside Process interface represents a computing device at a traffic management center or could be a field maintenance laptop. The requirements to manage the data exchanges between a management station and the CV Roadside Process are:

a) Manage Roadway Geometrics Information Requirements
b) Manage Movement Configuration for Connected Devices Requirements
c) Manage Collection of Connected Devices Data Requirements
d) Monitor Broadcasted MAP Messages Requirements
e) Monitor Broadcasted SPaT Messages Requirements

Note: Only requirements related to the operation of the signalized intersections in a connected vehicle environment are defined by NTCIP 1202 v03. Other standards may exist that define the interface requirements between a management station and a CV Roadside Process in a connected vehicle environment.

Note: The requirements in this section were deprecated in NTCIP 1202 v03B because this interface is now addressed by NTCIP 1218. At the time NTCIP 1202 v03A was published, the development of NTCIP 1218 was being initiated.

#### 3.5.4.2.1 Manage Roadway Geometrics Information Requirements [Deprecated]

A roadway geometry plan is used to provide information to connected devices about the roadway geometry (e.g., lane direction, lane widths, lane restrictions) in the surrounding vicinity. The following requirements allow a management station to configure the roadway geometry plan in a CV Roadside Process. The CV Roadside Process can then use the roadway geometry plan data to create and

Do Not Copy Without Written Permission © 2023 AASHTO / ITE / NEMA

broadcast MAP data messages, as defined by SAE J2735, to connected vehicles in the vicinity. The requirements to exchange roadway geometry plan data between a management station and a CV Roadside Process follow.

#### 3.5.4.2.1.1 Configure Roadway Geometry Plans Requirements [Deprecated]

A roadway geometry plan may define one or more intersections. The requirements for a management station to configure the roadway geometry plan for a CV Roadside Process follow.

##### 3.5.4.2.1.1.1 Configure Intersection Identifier [Deprecated]

Upon request from a management station, the CV Roadside Process shall store the intersection identifier for an intersection on the roadway geometry plan. The intersection identifier is used to uniquely identify an intersection within a region. Each roadway geometry plan may contain one or more intersections.

##### 3.5.4.2.1.1.2 Configure Intersection Location [Deprecated]

Upon request from a management station, the CV Roadside Process shall store the geographic location (latitude, longitude, elevation) of a reference point for an intersection on the roadway geometry plan. The latitude and longitude are measured in 1/10$^{th}$ of a micro degree in the WGS-84 coordinate system. The elevation is measured in 10-centimeter units above or below the reference ellipsoid. The geographic location typically is the center of the intersection.

> Note: Although elevation is an optional element for a MAP data message, elevation is included as part of this requirement.

##### 3.5.4.2.1.1.3 Configure Intersection Name [Deprecated]

Upon request from a management station, the CV Roadside Process shall store a descriptive name for an intersection on the roadway geometry plan. The descriptive name may be broadcasted to connected devices for informational purposes, or used for testing.

##### 3.5.4.2.1.1.4 Configure Intersection Default Lane Width [Deprecated]

Upon request from a management station, the CV Roadside Process shall store the default lane width for an intersection on the roadway geometry plan. The default lane width is measured in units of 1 centimeter. Valid values are 0 centimeters to 32767 centimeters.

##### 3.5.4.2.1.1.5 Manage Lane Requirements [Deprecated]

The requirements for a management station to configure a lane for a roadway geometry plan for a CV Roadside Process follow.

###### 3.5.4.2.1.1.5.1 Configure Lane Identifier [Deprecated]

Upon request from a management station, the CV Roadside Process shall store the lane identifier, between 1 to 255, for a lane on the roadway geometry plan. The lane identifier is used to uniquely identify a lane in the roadway geometry plan.

> Note: A roadway geometry plan may contain more than one intersection. Thus this lane identifier is unique within the roadway geometry plan. The lane identifier uniquely identifies a lane at an intersection (and is broadcasted in the MAP data message).

© 2023 AASHTO / ITE / NEMA Do Not Copy Without Written Permission

#### 3.5.4.2.1.1.5.2 Configure Lane Description [Deprecated]

Upon request from a management station, the CV Roadside Process shall store the descriptive name for a lane on the roadway geometry plan. The descriptive name is a text field used to describe the lane.

#### 3.5.4.2.1.1.5.3 Configure Ingress Approach [Deprecated]

Upon request from a management station, the CV Roadside Process shall store the index of an ingress approach within a lane on the roadway geometry plan. This index is used as an aid to indicate the gross position of a connected vehicle when its lane-level accuracy is unknown, and is useful when sets of lanes are used to describe the roadway geometry, as is done in Japan.

#### 3.5.4.2.1.1.5.4 Configure Egress Approach [Deprecated]

Upon request from a management station, the CV Roadside Process shall store the index of an egress within a lane on the roadway geometry plan. This index is used as an aid to indicate the gross position of a connected vehicle when its lane-level accuracy is unknown, and is useful when sets of lanes are used to describe the roadway geometry, as is done in Japan.

#### 3.5.4.2.1.1.5.5 Configure Allowed Lane Direction [Deprecated]

Upon request from a management station, the CV Roadside Process shall store the allowed direction(s) of travel of a lane on the roadway geometry plan. This requirement allows the RSU to indicate if travel is allowed towards (ingress direction) the beginning node point of the lane and/or away from (egress direction) the beginning node point of the lane. Some lanes may be bi-directional (e.g., a pedestrian crosswalk) or no travel is supported in the lane (e.g., medians). The path of a lane on a roadway geometry plan is defined by a sequence of node points, with a minimum of two node points required. The first node point is considered the beginning of the lane, while the last node point is considered the end of the lane (see Section 3.5.4.2.1.1.5.16).

#### 3.5.4.2.1.1.5.6 Configure Vehicle Lane Attributes [Deprecated]

Upon request from a management station, the CV Roadside Process shall store the specific properties of a vehicle lane type for a lane on the roadway geometry plan. The valid lane types are defined by DF_LaneTypeAttributes in SAE J2735. The possible vehicle lane type properties are defined by DE_LaneTypeAttributes-Vehicle in SAE J2735.

> Note: Revocable lanes are lanes that are not always active. If the lane is not always active, the status of the lane (active / not active) is broadcasted to users as part of the signal phase and timing message.

For example, a shoulder lane may be used by vehicles during rush hours and closed to vehicle traffic during all other times. That shoulder lane would have the property of a revocable lane, and its availability to vehicular traffic would be broadcast in the signal phase and timing message.

#### 3.5.4.2.1.1.5.7 Configure Crosswalk Attributes [Deprecated]

Upon request from a management station, the CV Roadside Process shall store the specific properties of a crosswalk type for a lane on the roadway geometry plan. The valid lane types are defined by DF_LaneTypeAttributes in SAE J2735. The possible crosswalk type properties are defined by DE_LaneTypeAttributes-Crosswalk in SAE J2735.

> Note: Revocable lanes are lanes that are not always active. If the lane is not always active, the status of the lane (active / not active) is broadcasted to users as part of the signal phase and timing message.

Do Not Copy Without Written Permission © 2023 AASHTO / ITE / NEMA

For example, a pedestrian crosswalk may be used by pedestrians only during school hours and closed to pedestrian traffic during all other times. That pedestrian crosswalk would have the property of a revocable lane, and its availability to pedestrian traffic would be broadcast in the signal phase and timing message.

#### 3.5.4.2.1.1.5.8 Configure Bicycle Lane Attributes [Deprecated]

Upon request from a management station, the CV Roadside Process shall store the specific properties of a bicycle lane type for a lane on the roadway geometry plan. The valid lane types are defined by DF_LaneTypeAttributes in SAE J2735. The possible bicycle lane type properties are defined by DE_LaneTypeAttributes-Bike in SAE J2735.

> Note: Revocable lanes are lanes that are not always active. If the lane is not always active, the status of the lane (active / not active) is broadcasted to users as part of the signal phase and timing message.

For example, a bicycle lane may be used by bicyclists only during non-rush hour times and closed to bicyclists during all other times. That bicycle lane would have the property of a revocable lane, and its availability to bicycle traffic would be broadcast in the signal phase and timing message.

#### 3.5.4.2.1.1.5.9 Configure Sidewalk Attributes [Deprecated]

Upon request from a management station, the CV Roadside Process shall store the specific properties of a sidewalk type for a lane on the roadway geometry plan. The valid lane types are defined by DF_LaneTypeAttributes in SAE J2735. The possible sidewalk type properties are defined by DE_LaneTypeAttributes-Sidewalk in SAE J2735.

> Note: Revocable lanes are lanes that are not always active. If the lane is not always active, the status of the lane (active / not active) is broadcasted to users as part of the signal phase and timing message.

For example, a sidewalk may be closed to pedestrian traffic during work hours because of construction and open to pedestrians during all other times. That sidewalk would have the property of a revocable lane, and its availability to pedestrian traffic would be broadcast in the signal phase and timing message.

#### 3.5.4.2.1.1.5.10 Configure Barrier Attributes [Deprecated]

Upon request from a management station, the CV Roadside Process shall store the specific properties of a barrier type for a lane on the roadway geometry plan. The valid lane types are defined by DF_LaneTypeAttributes in SAE J2735. The possible barrier type properties are defined by DE_LaneTypeAttributes-Barrier in SAE J2735.

> Note: Revocable lanes are lanes that are not always active. If the lane is not always active, the status of the lane (active / not active) is broadcasted to users as part of the signal phase and timing message.

For example, a barrier lane may be open to vehicular traffic during the morning rush hours as part of a reversible lane that is open and closed to traffic during all other times because it contains a moveable barrier. That barrier lane would have the property of a revocable lane, and its availability to vehicular traffic would be broadcast in the signal phase and timing message.

#### 3.5.4.2.1.1.5.11 Configure Striping Lane Attributes [Deprecated]

Upon request from a management station, the CV Roadside Process shall store the specific properties of a striping lane type for a lane on the roadway geometry plan. The valid lane types are defined by DF_LaneTypeAttributes in SAE J2735. The possible striping lane type properties are defined by DE_LaneTypeAttributes-Striping in SAE J2735.

© 2023 AASHTO / ITE / NEMA Do Not Copy Without Written Permission

Note: Revocable lanes are lanes that are not always active. If the lane is not always active, the status of the lane (active / not active) is broadcasted to users as part of the signal phase and timing message.

For example, a striping lane may not be applicable during special events. That striping lane would have the property of a revocable lane and its (lack of) presence would be broadcast in the signal phase and timing message.

#### 3.5.4.2.1.1.5.12 Configure Tracked Lane Attributes [Deprecated]

Upon request from a management station, the CV Roadside Process shall store the specific properties of a tracked lane type for a lane on the roadway geometry plan. The valid lane types are defined by DF_LaneTypeAttributes in SAE J2735. The possible tracked lane type properties are defined by DE_LaneTypeAttributes-TrackedVehicle in SAE J2735.

Note: Revocable lanes are lanes that are not always active. If the lane is not always active, the status of the lane (active / not active) is broadcasted to users as part of the signal phase and timing message.

For example, a tracked lane for a light rail line may not be used during the late night-early morning hours. That tracked lane would have the property of a revocable lane, and its availability and use by tracked vehicles would be broadcast in the signal phase and timing message.

#### 3.5.4.2.1.1.5.13 Configure Parked Lane Attributes [Deprecated]

Upon request from a management station, the CV Roadside Process shall store the specific properties of a parking lane type for a lane on the roadway geometry plan. The valid lane types are defined by DF_LaneTypeAttributes in SAE J2735. The possible parking lane type properties are defined by DE_LaneTypeAttributes-Parking in SAE J2735.

Note: Revocable lanes are lanes that are not always active. If the lane is not always active, the status of the lane (active / not active) is broadcasted to users as part of the signal phase and timing message.

For example, a parking lane may not be applicable during certain hours of the day for street cleaning. That parking lane would have the property of a revocable lane, and its availability would be broadcast in the signal phase and timing message.

#### 3.5.4.2.1.1.5.14 Configure Shared Lanes Attributes [Deprecated]

Upon request from a management station, the CV Roadside Process shall store what other users or travel modes has equal right to access and use a lane on the roadway geometry plan. This requirement alerts users of the roadway geometry plan that there may be other users or modes that may be present in the same spatial lane. The valid users or travel modes that may share the lane are defined in DE_LaneSharing of SAE J2735.

#### 3.5.4.2.1.1.5.15 Configure Allowed Maneuvers [Deprecated]

Upon request from a management station, the CV Roadside Process shall store the allowed maneuvers for a lane on the roadway geometry plan. Valid values are defined in DE_AllowedManeuvers from SAE J2735. Note that in practice, maneuvers may be further restricted by vehicle class or other local regulatory environment.

Do Not Copy Without Written Permission © 2023 AASHTO / ITE / NEMA

#### 3.5.4.2.1.1.5.16 Configure Lane Path [Deprecated]

Upon request from a management station, the CV Roadside Process shall store the geographic path of a lane on a roadway geometry plan. The path is described by a sequence of node points, with the straight line paths between each successive node point representing the centerline of the lane. Each node point is either:

a) a geographic position (latitude, longitude); or
b) represented as an X-Y offset, in centimeters, from the previous node in the sequence, with the first node point representing the offset from the intersection's reference point

The first node point in the sequence represents the beginning of the lane. Typically for vehicular lanes, the first node point is the node point closest to the intersection, generally representing the location of the stop line for approaches, and the beginning of the lane for outbound (egress) lanes.

#### 3.5.4.2.1.1.6 Configure Node Point Requirements [Deprecated]

The requirements to configure the properties and attributes of a node point for a lane are described below.

#### 3.5.4.2.1.1.6.1 Configure Node Point Attributes [Deprecated]

Upon request from a management station, the CV Roadside Process shall store the attributes of a node point for a lane on a roadway geometry plan. The attributes that can be defined are local to the node point itself, and are defined by DE_NodeAttributeXY in SAE J2735.

#### 3.5.4.2.1.1.6.2 Configure Lane Segment Attributes [Deprecated]

Upon request from a management station, the CV Roadside Process shall store the attributes of a lane at a node point on a roadway geometry plan. The lane segment attributes that can be defined may persist from the node point to adjacent node points, and are defined by DE_SegmentAttributeXY in SAE J2735.

#### 3.5.4.2.1.1.6.3 Configure Lane End Point Angle [Deprecated]

Upon request from a management station, the CV Roadside Process shall store the final angle of the lane at the last node point of the lane on a roadway geometry plan. This angle, measured in degrees, is used to "cant" the stop line of the lane and is defined by DE_DeltaAngle in SAE J2735.

#### 3.5.4.2.1.1.6.4 Configure Lane Crown Angle—Center [Deprecated]

Upon request from a management station, the CV Roadside Process shall store the gross tangential angle of the roadway surface with respect to the local horizontal axis measured at the node point of the lane on a roadway geometry plan. This angle, measured in 0.3-degree units, is used for speed warning and traction calculations for the lane segment at the node point and is defined by DE_RoadwayCrownAngle in SAE J2735.

#### 3.5.4.2.1.1.6.5 Configure Lane Crown Angle—Left Edge [Deprecated]

Upon request from a management station, the CV Roadside Process shall store the gross tangential angle of the roadway surface with respect to the local horizontal axis measured at the left edge of the lane at a node point on a roadway geometry plan. This angle, measured in 0.3-degree units, is used for speed warning and traction calculations for the lane segment at the node point and is defined by DE_RoadwayCrownAngle in SAE J2735. The measurement point is on the left edge of the lane when traveling in the normal direction of travel and is located perpendicular to the node point. The normal direction of travel is defined as the path from the last node point in the sequence defining the path of the lane towards the first node point of the lane. See Figure 6.

© 2023 AASHTO / ITE / NEMA Do Not Copy Without Written Permission

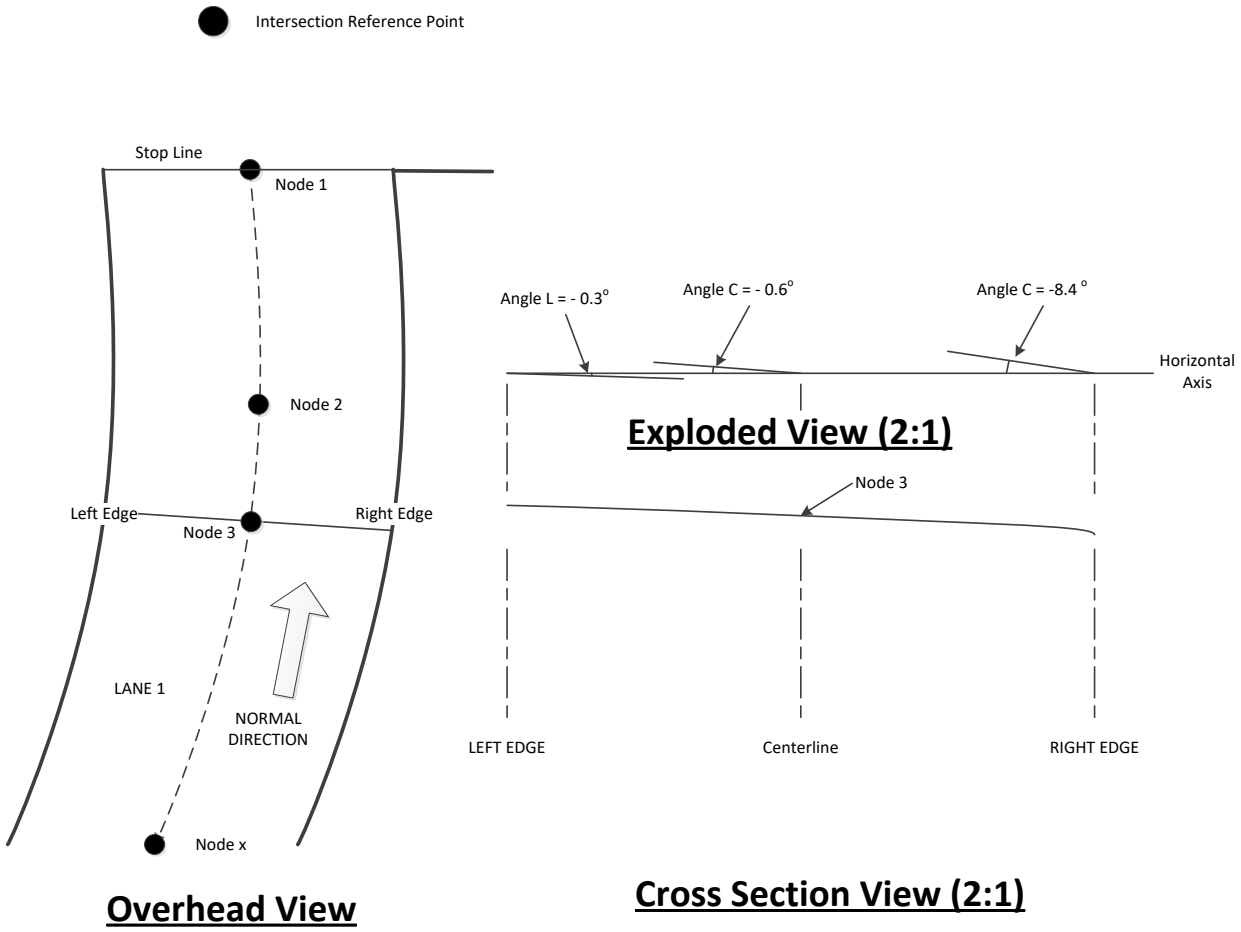


**Figure 6 Example Node Point Attribute**

#### 3.5.4.2.1.1.6.6 Configure Lane Crown Angle—Right Edge [Deprecated]

Upon request from a management station, the CV Roadside Process shall store the gross tangential angle of the roadway surface with respect to the local horizontal axis measured at the right edge of the lane at a node point on a roadway geometry plan. This angle, measured in 0.3-degree units, is used for speed warning and traction calculations for the lane segment at the node point and is defined by DE_RoadwayCrownAngle in SAE J2735. The measurement point is on the right edge of the lane when traveling in the normal direction of travel and is located perpendicular to the node point. The normal direction of travel is defined as the path from the last node point in the sequence defining the path of the lane towards the first node point of the lane. See Figure 6.

#### 3.5.4.2.1.1.6.7 Configure Lane Angle [Deprecated]

Upon request from a management station, the CV Roadside Process shall store the angle of another lane merging or diverging at the node point of a lane on a roadway geometry plan. This angle, measured in 1.5-degree units, is defined by DE_MergeDivergeNodeAngle in SAE J2735.

 © 2023 AASHTO / ITE / NEMA

#### 3.5.4.2.1.1.6.8 Configure Speed Limit Type at Node [Deprecated]

Upon request from a management station, the CV Roadside Process shall store the types of speed limit regulations applicable at a node point for a lane on the roadway geometry plan. Valid types of speed limit types are defined by DE_SpeedLimitType in SAE J2735.

#### 3.5.4.2.1.1.6.9 Configure Speed Limit at Node [Deprecated]

Upon request from a management station, the CV Roadside Process shall store the speed limit, in units of 0.02 meters per second, for an applicable speed limit type at a node point for a lane on the roadway geometry plan. Valid values are from 0 to 163.92 meters per second, and unavailable.

#### 3.5.4.2.1.1.6.10 Configure Lane Width Delta [Deprecated]

Upon request from a management station, the CV Roadside Process shall store the difference between the lane width at a node point and the previous node point for a lane on the roadway geometry plan. For the first node point of a lane, the value is the difference between the lane's default width and the lane width at the first node point. The difference is measured in centimeter units and is defined by DE_Offset_B10 in SAE J2735. Note that the lane widths between node points are a linear taper.

#### 3.5.4.2.1.1.6.11 Configure Lane Elevation Delta [Deprecated]

Upon request from a management station, the CV Roadside Process shall store the difference between the lane elevation at a node point and the previous node point for a lane on the roadway geometry plan. For the first node point of a lane, the value is the difference between the elevation at the reference point and the elevation of the lane at the first node point. The difference is measured in centimeter units and is defined by DE_Offset_B10 in SAE J2735. Note that elevations between node points are a linear taper.

### 3.5.4.2.1.1.7 Configure Computed Lane Requirements [Deprecated]

For vehicular lanes at an intersection, adjacent lanes approaching the intersection likely have similar properties, attributes, and paths. To reduce the bandwidth needed to provide the roadway geometry plans to travelers, SAE J2735 supports computed lanes, which "copy" the lane characteristics from a reference lane and have similar geometric dimensions as the referenced lane. The requirements to configure a computed lane are described below.

#### 3.5.4.2.1.1.7.1 Configure Computed Lane Reference [Deprecated]

Upon request from a management station, the CV Roadside Process shall store the identifier of the lane to be referenced when defining a computed lane on the roadway geometry plan.

#### 3.5.4.2.1.1.7.2 Configure Computed Lane X Offset [Deprecated]

Upon request from a management station, the CV Roadside Process shall store the X offset, in centimeters, from the centerline of the referenced lane to the centerline of a computed lane on the roadway geometry plan. Positive values are to the East. The X-offset is independent of the width of the lane and is defined by DE_DrivenLineOffsetLarge in SAE J2735.

#### 3.5.4.2.1.1.7.3 Configure Computed Lane Y Offset [Deprecated]

Upon request from a management station, the CV Roadside Process shall store the Y offset, in centimeters, from the centerline of the referenced lane to the centerline of a computed lane. Positive values are to the North. The Y-offset is independent of the width of the lane and is defined by DE_DrivenLineOffsetLarge in SAE J2735.

© 2023 AASHTO / ITE / NEMA Do Not Copy Without Written Permission

#### 3.5.4.2.1.1.7.4 Configure Computed Lane Rotation [Deprecated]

Upon request from a management station, the CV Roadside Process shall store a lane rotation value for a computed lane from the referenced lane on the roadway geometry plan. The rotation value, in units of 0.0125 degrees, occurs around the initial node point of the referenced lane, and is defined by DE_Angle in SAE J2735.

#### 3.5.4.2.1.1.7.5 Configure Computed Lane X Scale [Deprecated]

Upon request from a management station, the CV Roadside Process shall store the scale of a computed lane along the X-axis in reference to the referenced lane on the roadway geometry plan. The scale allows a computed lane to be expanded or contracted along the X-axis (e.g., a wider lane), and is based on the referenced lane's initial node point. The rotation value, in units of 0.0125 degrees, occurs around the initial node point of the referenced lane, and is defined by DE_Scale_B12 in SAE J2735.

#### 3.5.4.2.1.1.7.6 Configure Computed Lane Y Scale [Deprecated]

Upon request from a management station, the CV Roadside Process shall store the scale of a computed lane along the Y-axis in reference to the referenced lane on the roadway geometry plan. The scale allows a computed lane to be expanded or contracted along the Y-axis (e.g., a wider lane), and is based on the referenced lane's initial node point. The rotation value, in units of 0.0125 degrees, occurs around the initial node point of the referenced lane, and is defined by DE_Scale_B12 in SAE J2735.

#### 3.5.4.2.1.1.8 Configure Overlays [Deprecated]

Upon request from a management station, the CV Roadside Process shall store the identifier of the lanes that overlap a lane on the roadway geometry plan. This requirement identifies other lanes that run on top of the path of a lane, such as a tracked lane that shares the same path of a vehicular lane.

#### 3.5.4.2.1.1.9 Configure Applicable Users [Deprecated]

Upon request from a management station, the CV Roadside Process shall store the vehicle types or users that are assigned to an index value. Each index value may have one or more vehicle types or users assigned to it. Valid vehicle types and users are defined by DE_RestrictionClassID in SAE J2735. Assignment of a vehicle type or user indicates that the CV Roadside Process can support movements intended only for those vehicle types or users. If no vehicle types or users are assigned to an index value, then all movements supported by the intersections are intended for all vehicles (or pedestrians for pedestrian movements).

### 3.5.4.2.1.2 Retrieve Roadway Geometry Plans Requirements [Deprecated]

The requirements for a management station to retrieve the roadway geometry plan from a CV Roadside Process follow.

#### 3.5.4.2.1.2.1 Determine Maximum Number of Intersections Supported [Deprecated]

Upon request from a management station, the CV Roadside Process shall return the maximum number of intersections on the roadway geometry plan supported by the device.

#### 3.5.4.2.1.2.2 Determine Maximum Number of Lanes Supported [Deprecated]

Upon request from a management station, the CV Roadside Process shall return the maximum number of lanes on the roadway geometry plan supported by the device.

Do Not Copy Without Written Permission © 2023 AASHTO / ITE / NEMA

#### 3.5.4.2.1.2.3 Determine Maximum Number of Computed Lanes Supported [Deprecated]

Upon request from a management station, the CV Roadside Process shall return the maximum number of computed lanes on the roadway geometry plan supported by the device.

#### 3.5.4.2.1.2.4 Determine Maximum Number of Node Points Supported [Deprecated]

Upon request from a management station, the CV Roadside Process shall return the maximum number of node points supported by the device for a lane on the roadway geometry plan.

#### 3.5.4.2.1.2.5 Determine Maximum Number of Speed Limits Supported [Deprecated]

Upon request from a management station, the CV Roadside Process shall return the maximum number of speed limit definitions supported by the device for a roadway geometry plan. Each speed limit definition identifies a speed limit value and the vehicle types or users that the speed limit value is intended for.

#### 3.5.4.2.1.2.6 Determine Maximum Number of Vehicle Type Definitions [Deprecated]

Upon request from a management station, the CV Roadside Process shall return the maximum number of vehicle type or traveler index values supported by the device for a roadway geometry plan. The vehicle type or traveler is defined by DE_RestrictionClassID in SAE J2735. Each index value defines a class of user (vehicle type or traveler) or users that are supported by the intersection. This index value is typically used to represent a movement or a restriction to a class of users at an intersection.

### 3.5.4.2.1.3 Configure Roadway Geometry Plan Metadata Requirements [Deprecated]

The requirements to configure the metadata for the roadway geometry plan follow.

#### 3.5.4.2.1.3.1 Configure Roadway Geometry Plan Process Method [Deprecated]

Upon request from a management station, the CV Roadside Process shall store the textual description of how the roadway geometry plan was processed. The description is a text field from 0 to 255 characters in length.

#### 3.5.4.2.1.3.2 Configure Roadway Geometry Plan Process Agency [Deprecated]

Upon request from a management station, the CV Roadside Process shall store the name of the agency that prepared the roadway geometry plan. The agency description is a text field from 0 to 255 characters in length.

#### 3.5.4.2.1.3.3 Configure Roadway Geometry Plan Date [Deprecated]

Upon request from a management station, the CV Roadside Process shall store the date that the roadway geometry plan was last checked. The date is a text field description from 0 to 255 characters in length.

#### 3.5.4.2.1.3.4 Configure Roadway Geometry Plan Geoid [Deprecated]

Upon request from a management station, the CV Roadside Process shall store information about the source map used to develop the roadway geometry plan. The geoid is a text field description from 0 to 255 characters in length.

#### 3.5.4.2.1.3.5 Configure Roadway Geometry Plan Layer Type [Deprecated]

Upon request from a management station, the CV Roadside Process shall store the type of information to be found in the roadway geometry plan. The valid values are defined in DE_LayerType in SAE J2735.

© 2023 AASHTO / ITE / NEMA Do Not Copy Without Written Permission

#### 3.5.4.2.1.3.6 Configure Roadway Geometry Plan Layer Identifier [Deprecated]

Upon request from a management station, the CV Roadside Process shall store the identifier of the layer that the roadway geometry plan should be broadcasted in the MAP data message. The valid values are defined in DE_LayerID in SAE J2735.

### 3.5.4.2.2 Manage Movement Configuration for Connected Devices Requirements [Deprecated]

The following requirements allow a management station to configure the association between a signal indication at a signalized intersection and an allowed movement through the intersection. The CV Roadside Process can then provide this association as part of the MAP data message broadcasted to connected devices. This association is used by connected devices to determine what movements are permitted based on the lane the connected device is currently located in and the current signal indication state (e.g., green, yellow or red) for that movement.

#### 3.5.4.2.2.1 Configure Lane Connections Requirements [Deprecated]

The requirements to configure the permitted maneuvers from an ingress lane at the intersection to an egress lane are described below.

#### 3.5.4.2.2.1.1 Configure Connecting Lane [Deprecated]

Upon request from a management station, the CV Roadside Process shall store for an ingress lane the identifiers of each egress lane to which a vehicle in that ingress lane is permitted to exit the intersection as part of the roadway geometry plan. The lane identifier is an integer from 1 to 255.

#### 3.5.4.2.2.1.2 Configure Connecting Maneuver [Deprecated]

Upon request from a management station, the CV Roadside Process shall store for a defined ingress-egress lane pair on the roadway geometry plan, the permitted maneuver between the ingress and egress lanes. The valid maneuvers are defined by DE_AllowedManeuvers in SAE J2735.

#### 3.5.4.2.2.1.3 Configure Remote Intersection Identifier [Deprecated]

Upon request from a management station, the CV Roadside Process shall store for the identifier of the remote intersection if the properties and attributes of the egress lane for an ingress lane is defined by another intersection on the roadway geometry plan. This identifier is used only if the egress lane is defined by another intersection.

#### 3.5.4.2.2.1.4 Configure Matching Signal Group [Deprecated]

Upon request from a management station, the CV Roadside Process shall store the identifier of the signal group that allows the permitted maneuver for each ingress-egress lane pair on the roadway geometry plan. If a movement is controlled by more than one signal group, such as a 5-section protected permitted left turn, the same ingress-egress lane should be stored with each different signal group. The signal group identifier is an integer from 1 to 255 and is equivalent to the channel number.

#### 3.5.4.2.2.2 Configure Lane Connection Users [Deprecated]

Upon request from a management station, the CV Roadside Process shall store the indices of vehicle types or users that a permitted maneuver – signal group pair on the roadway geometry plan is applicable to. If a vehicle type or user index is not defined, then the maneuver – signal group pair is permitted for all users. The definition of the valid vehicle type and user index supported by the signalized intersection can be found in Section 3.5.4.2.1.1.9. The valid vehicle types and users are defined by

 © 2023 AASHTO / ITE / NEMA

DE_RestrictionClassID in SAE J2735. Not all valid vehicle types and users may be supported by a signalized intersection.

#### 3.5.4.2.2.3 Configure Connection Identifier [Deprecated]

Upon request from a management station, the CV Roadside Process shall store the connection used to relate a lane connection to any dynamic clearance data in the signal phase and timing data at an intersection.

#### 3.5.4.2.2.4 Configure MAP Plans [Deprecated]

Upon request from a management station, the CV Roadside Process shall store the lane indices to be included in a MAP plan. Each MAP plan defines the lanes and lane attributes that are valid for that MAP plan. Different MAP plans may be desired for different situations. For example, there may be a MAP plan defined for normal weekday operations, and another MAP plan for special events such as a concert or sports event for intersections near an event venue. Defining MAP plans also allows a MAP plan to be scheduled.

#### 3.5.4.2.2.5 Determine Maximum Number of Signal Groups Supported [Deprecated]

Upon request from a management station, the CV Roadside Process shall return the maximum number of signal groups on the roadway geometry plan supported by the device.

#### 3.5.4.2.2.6 Determine Maximum Number of Lane Connections Supported [Deprecated]

Upon request from a management station, the CV Roadside Process shall return the maximum number of lane connections supported by the device for a lane on the roadway geometry plan. Each lane connection identifies an ingress-egress lane pair for an ingress lane.

#### 3.5.4.2.2.7 Command MAP Plans [Deprecated]

Upon request from a management station, the CV Roadside Process shall store which MAP plan is to be commanded to be broadcasted by the RSU. Each MAP plan contains the definitions of the lanes in the vicinity.

### 3.5.4.2.3 Manage Collection of Connected Devices Data Requirements [Deprecated]

Information collected from connected devices, such as a vehicle with an on-board unit or a smartphone broadcasting location information, provide a rich source of transportation information to transportation planners and engineers. RSUs can be equipped to receive broadcasts from other connected devices, such as Basic Safety Messages (BSMs) from connected vehicles or Personal Safety Messages (PSMs) from mobile connected devices. The data collected by the CV Roadside Process from these broadcasts can then be used as an input for traveler (vehicle or pedestrian) demand at an intersection, then forwarded to a center, such as a traffic management center, to produce network performance measures around the intersection or the surface transportation network.

The below requirements allow a management station to configure the CV Roadside Process to use the connected vehicle data received by a CV Roadside Process as inputs to the ASC. The requirements to manage processed connected vehicle data as detector inputs to an ASC follow.

#### 3.5.4.2.3.1 Configure Connected Device Detector Requirements [Deprecated]

To use connected device data as inputs for traffic-actuated operations in an ASC controller, a management station needs to configure the CV Roadside Process to filter the connected device data received, such as location of the connected device, direction of travel, and travel mode. The requirements

© 2023 AASHTO / ITE / NEMA Do Not Copy Without Written Permission

to manage the detection and retrieval of relevant connected device data received by a CV Roadside Process as an input to an ASC follow.

#### 3.5.4.2.3.1.1 Enable Connected Device Detection [Deprecated]

Upon request from a management station, the CV Roadside Process shall store if the detection of connected devices is enabled or disabled. This requirement allows a CV Roadside Process to enable the detection and processing of connected devices (such as an equipped vehicle) for use by traffic signal controllers, such as for performance measures or actuation purposes.

#### 3.5.4.2.3.1.2 Enable Connected Device Detector [Deprecated]

Upon request from a management station, the CV Roadside Process shall store if a connected device detector is enabled or disabled. This requirement allows a CV Roadside Process to enable or disable individual connected device detectors as needed.

#### 3.5.4.2.3.1.3 Configure Connected Device Detector Reference Point [Deprecated]

Upon request from a management station, the CV Roadside Process shall store the identifier of the intersection that a connected device detector is associated with. This is the intersection that the inputs from a connected device detector is used for.

#### 3.5.4.2.3.1.4 Configure Connected Device Detector Zone—Geographic [Deprecated]

Upon request from a management station, the CV Roadside Process shall store the boundaries of the detection zone for a connected device detector. The detection zone boundaries are defined by a sequence of X-Y offset values relative to the reference point of the intersection that the connected device detector is associated with; and the width of the detection zone, in one-centimeter units, along the centerline. This sequence of offset values form nodes that are a description of the path of the detection zone, starting with the node (point) that is closest to the reference point for the connected device detector. The offset values (x-axis, y-axis, and z-axis, based on the WGS-84 coordinate system and its reference ellipsoid) are measured in one-centimeter units, with each successive node being located further along the path from the reference point.

#### 3.5.4.2.3.1.5 Configure Connected Device Detector Zone—Lane [Deprecated]

Upon request from a management station, the CV Roadside Process shall store the identifiers of the lane that forms the boundaries of the detection zone for a connected device detector. The detection zone boundaries are formed by the geographic boundaries of the lane(s) referenced for a connected device detector.

#### 3.5.4.2.3.1.6 Configure Connected Device Data Filters [Deprecated]

Upon request from a management station, the CV Roadside Process shall store the configuration for collecting connected device data. This configuration defines what safety message types (BSMs, PSMs) and the criteria to determine if a safety message is to be processed by the CV Roadside Process.

#### 3.5.4.2.3.1.7 Configure Connected Device Detector Assignments [Deprecated]

Upon request from a management station, the CV Roadside Process shall store the identifier of the detector input of the ASC a connected device detector is associated with. This requirement allows the connected device detector outputs to be a detector input to the ASC.

Do Not Copy Without Written Permission © 2023 AASHTO / ITE / NEMA

#### 3.5.4.2.3.1.8 Determine Maximum Number of Connected Device Detectors Supported [Deprecated]

Upon request from a management station, the CV Roadside Process shall return the number of connected device detectors that can be configured by the CV Roadside Process.

#### 3.5.4.2.3.1.9 Determine Maximum Number of Connected Device Detectors Node Points Supported [Deprecated]

Upon request from a management station, the CV Roadside Process shall return the number of connected device detector node points that can be configured by the CV Roadside Process.

### 3.5.4.2.3.2 Configure Connected Device Detector Output Requirements [Deprecated]

A CV Roadside Process receiving BSMs and PSMs will process the connected device data, then exchange the processed data with the ASC as inputs for the ASC's signal operations, or for collection by a traffic management center. Processed data may be in two forms, as an actuation to indicate the presence of a traveler in the detection zone, or as a detection report, which provides derived data from connected device data within the detection zone.

The requirements to manage the processed connected device data in a CV Roadside Process follow.

#### 3.5.4.2.3.2.1 Configure Connected Device Detector Outputs [Deprecated]

Upon request from a management station, a CV Roadside Process shall store if a connected device detector is enabled to provide actuations or detector reports. A CV Roadside Process is permitted to return both actuations and detector reports for a detector input.

#### 3.5.4.2.3.2.2 Configure Actuation Sampling Period [Deprecated]

Upon request from a management station, the ASC shall store the sampling period, in milliseconds, for exchanging actuation reports between the ASC and the CV Roadside Process. An actuation report indicates the connected device detectors that are actuated at the time the report was generated, based on if any BSMs or PSMs are detected within the detection zone and if the BSM or PSM satisfies the configured criteria.

#### 3.5.4.2.3.2.3 Retrieve Actuation Report [Deprecated]

Upon request from a management station, the CV Roadside Process shall return the actuation report for connected device detectors to the management station. An actuation report indicates the connected device detectors that are actuated at the time, based on if any BSMs or PSMs are detected within the detection zone and if the BSM or PSM satisfies the configuration criteria.

#### 3.5.4.2.3.2.4 Configure Detection Reports Data [Deprecated]

Upon request from a management station, the CV Roadside Process shall store what processed data is to be reported in the detection reports to be exchanged with the ASC. The processed data that can be provided by in a detection report are volume, average speed, average travel time, queue length, average gap, and platoon length. Volume is a count of the number of connected devices currently within the detection zone and satisfying the criteria configured.

Average speed is the average speed, in 0.5 kilometers per hour, of the connected devices currently within the detection zone and satisfying the criteria configured. Travel time is the average travel time, in tenths of a second, for the connected devices currently within the detection zone and satisfying the criteria configured to traverse the detection zone. Queue length is the number of connected devices currently queued in the detection zone. Gap is the average distance, in centimeters, between the connected

© 2023 AASHTO / ITE / NEMA Do Not Copy Without Written Permission

vehicles currently within the detection zone and satisfying the criteria configured. The gap is defined as the distance between the edge of the rear bumper of a connected vehicle and the edge of the front bumper of the connected vehicle behind it. Platoon length is the number of connected vehicles currently detected in a platoon within the detection zone.

#### 3.5.4.2.3.2.5 Configure Detection Report Sampling Period [Deprecated]

Upon request from a management station, the CV Roadside Process shall store the sampling period, in seconds, for exchanging detection reports between the ASC and the CV Roadside Process.

#### 3.5.4.2.3.2.6 Retrieve Detection Report [Deprecated]

Upon request from a management station, the CV Roadside Process shall return the detection reports stored in the CV Roadside Process to the management station.

### 3.5.4.2.4 Monitor Broadcasted MAP Messages Requirements [Deprecated]

The requirements for a management station to monitor the MAP data message being broadcasted by the RSU follow.

#### 3.5.4.2.4.1 Monitor MAP Data Message Sequence [Deprecated]

Upon request from a management station, the CV Roadside Process shall return the sequence number of the most recently broadcasted MAP data message. A sequence number is included with the broadcast of a MAP data message and increments by one when the contents of the MAP data message changes.

#### 3.5.4.2.4.2 Monitor MAP Data Message Time [Deprecated]

Upon request from a management station, the CV Roadside Process shall return the minute of the year that the MAP data message was last broadcasted.

#### 3.5.4.2.4.3 Monitor MAP Data Message Intersection Sequence [Deprecated]

Upon request from a management station, the CV Roadside Process shall return the sequence number for an intersection included in the most recently broadcasted MAP data message. A sequence number for an intersection is included with the broadcast of a MAP data message and increments by one when the roadway geometry for the intersection changes in the MAP data message broadcasted. Note that this sequence number may be different from the sequence number for the MAP data message as a MAP data message may contain multiple roadway geometry plans and other map fragments.

#### 3.5.4.2.4.4 Monitor MAP Plan [Deprecated]

Upon request from a management station, the CV Roadside Process shall return the MAP plan used in most recently broadcasted MAP data message. A value of 0 indicates that the MAP data in the most recently broadcasted MAP data message is not defined by a MAP plan.

### 3.5.4.2.5 Monitor Broadcasted SPaT Messages Requirements [Deprecated]

An RSU broadcasts SPaT messages to connected devices, with each SPaT message containing the signal phase and timing information for one or more signalized intersections. The requirements for a management station to monitor the SPaT message being broadcasted by the RSU (CV Roadside Process) follow.

Do Not Copy Without Written Permission © 2023 AASHTO / ITE / NEMA

#### 3.5.4.2.5.1 Monitor Signal Phase and Timing Message Sequence [Deprecated]

Upon request from a management station, the CV Roadside Process shall return the sequence number of the most recently broadcasted SPaT message for each signalized intersection. A sequence number is included with the broadcast of a SPaT message and is incremented by one when the contents of the SPaT message for that specific signalized intersection changes.

#### 3.5.4.2.5.2 Monitor Signal Phase and Timing Message Timestamp [Deprecated]

Upon request from a management station, the CV Roadside Process shall return the time the most recently broadcast SPaT message was broadcasted by the RSU. The time is expressed as the number of elapsed minutes of the current year using UTC time.

#### 3.5.4.2.5.3 Monitor Intersection SPaT Message Timestamp [Deprecated]

Upon request from a management station, the CV Roadside Process shall return the time the signal phase and timing data for a signalized intersection was generated by the ASC. This timestamp may be included along with the signal phase and timing data for each signalized intersection included in the SPaT message broadcasted by the RSU. The time is expressed as the number of elapsed minutes of the current year using UTC time.

#### 3.5.4.2.5.4 Monitor Enabled Lanes [Deprecated]

Upon request from a management station, the CV Roadside Process shall return the identifiers of the lanes that are being broadcasted as Enabled Lanes Active. Each lane defined for a roadway geometry plan can be defined as a revocable lane—that is, the lane is not always active for a specific use. If a revocable lane is broadcasted as Enabled Lanes Active, it indicates that the lane definition is Active (in use).

### 3.5.4.3 ASC – CV Roadside Process Interface Requirements

The third interface for managing an ASC in a connected vehicle environment is between the ASC Process (ASC) and the CV Roadside Process (RSU). Two architectures are addressed in NTCIP 1202 v03 for exchanging data across the ASC Process – CV Roadside Process Interface.

a) [Deprecated] In the first architecture, the CV Roadside Process retrieves signal phase and timing data from the ASC and the CV Roadside Process delivers connected device detection reports and reports roadway geometric data to the ASC. From an SNMP standpoint, the CV Roadside Process is an SNMP manager (or management station), and the ASC is the agent.
b) In the second architecture, the ASC delivers signal phase and timing data to the CV Roadside Process. From an SNMP standpoint, the ASC is the SNMP manager, and the CV Roadside Process is the agent.

Regardless of the architecture, the data exchange requirements across the ASC Process – CV Roadside Process interface are the same—the difference is which component reports and delivers the data, the ASC or the CV Roadside Process. To address both architectures, there are two sets of requirements for the ASC – CV Roadside Process Interface, one set if the CV Roadside Process is the SNMP manager, and a second set if the ASC is the SNMP manager.

The sub-requirements to manage the data exchanges between the ASC Process and the CV Roadside Process are:

a) Exchange Current and Next Movement Information Requirements
b) Exchange Next Occurrence of a Movement Requirements
c) Exchange Presence of Connected Devices Requirements
d) Exchange Roadway Geometrics Information Requirements

© 2023 AASHTO / ITE / NEMA Do Not Copy Without Written Permission

The requirements to manage the data exchanges between an ASC and a CV Roadside Process follow.

#### 3.5.4.3.1 Exchange Current and Next Movement Information Requirements

The following requirements allow an ASC to exchange current and next movement data with a CV Roadside Process. The CV Roadside Process can then use this data to generate SPaT messages, as defined by SAE J2735, to connected devices in the vicinity of the RSU.

##### 3.5.4.3.1.1 Provide Current and Next Movement Information Requirements

If the ASC is an SNMP manager and the CV Roadside Process is an SNMP agent, then the requirements for an ASC to provide current and next movement information to a CV Roadside Process are as follows.

###### 3.5.4.3.1.1.1 Provide Intersection Identifier [Deprecated]

Upon request from an ASC, a CV Roadside Process shall store the intersection identifiers for the intersections that the signal phase and timing data is for. An ASC may control traffic flow for more than one intersection. An intersection identifier is used to uniquely identify an intersection within a region.

> Note: This requirement was deprecated in NTCIP 1202 v03B and replaced by new requirements that associate a movement with a signal group instead of a channel. Requirement 3.5.4.3.1.1.7, Configure Road Authority, allows the road authority identifier to be configured.

###### 3.5.4.3.1.1.2 Provide Signal Phase and Timing Intersection Status [Deprecated]

Upon request from an ASC, a CV Roadside Process shall store the status of the ASC as part of the signal phase and timing data. The intersection status values are defined by DE_IntersectionStatusObject in SAE J2735.

> Note: This requirement was deprecated in NTCIP 1202 v03B and replaced by a new requirement, 3.5.4.3.1.1.8, Provide Signal Phase and Timing Intersection Status V2, which clarifies the definitions of the status bits.

###### 3.5.4.3.1.1.3 Provide Movement Status Requirements

The SPaT message that is broadcasted by an RSU to connected vehicles includes information about what vehicle (or pedestrian) movements are permitted and when at a signalized intersection. To provide this information, the CV Roadside Process needs movement data from the ASC. The requirements to allow an ASC to provide movement data to a CV Roadside Process are defined as follows.

###### 3.5.4.3.1.1.3.1 Provide Movement Time Point [Deprecated]

Upon request from an ASC, a CV Roadside Process shall store the time point reference that the ASC will report movement start/end times. Time points are in ticks, each tick representing units of tenths of a second, with a value of 0 representing the top of the hour, resulting in a range of 0 to 35999. These time points do not need to be synchronized with UTC time or the RSU time.

> Note: This requirement was deprecated in NTCIP 1202 v03B and replaced by a new requirement, 3.5.4.3.1.1.3.9, Provide Movement Time Point V2, which supports leap seconds.

###### 3.5.4.3.1.1.3.2 Provide Movement State [Deprecated]

Upon request from an ASC, a CV Roadside Process shall store the overall current state of a movement (for a channel) at the intersection. The valid states are defined by DE_MovementPhaseState in SAE J2735.

Do Not Copy Without Written Permission © 2023 AASHTO / ITE / NEMA

Note: This requirement was deprecated in NTCIP 1202 v03B and replaced by a new requirement, 3.5.4.3.1.1.3.10, Provide Movement State V2, which associates a movement with a signal group instead of a channel.

#### 3.5.4.3.1.1.3.3 Provide Movement Minimum End Time [Deprecated]

Upon request from an ASC, a CV Roadside Process shall store the time point of the earliest possible end of the current movement state (e.g., at the end of a permissive green or at the end of a permissive yellow) at an intersection, as defined by DE_Timemark in SAE J2735. If the duration of the current state is fixed, this value indicates the end time. This value can be viewed as the earliest possible time point at which the current interval could end, except when unpredictable events relating to a preemption or priority call come into play and disrupt a currently active timing plan. The time point is measured in tenths of a second in the current or next hour.

Note: This requirement was deprecated in NTCIP 1202 v03B and replaced by a new requirement, 3.5.4.3.1.1.3.11, Provide Movement Minimum End Time V2, which associates the movement with a signal group instead of a channel and supports leap seconds.

#### 3.5.4.3.1.1.3.4 Provide Movement Maximum End Time [Deprecated]

Upon request from an ASC, a CV Roadside Process shall store the time point of the latest possible end of the current movement state (e.g., at the end of a protected green or end of a steady red) at an intersection, as defined by DE_Timemark in SAE J2735. This value can be viewed as the latest possible time point at which the current interval could end, except when unpredictable events relating to a preemption or priority call come into play and disrupt a currently active timing plan. The time point is measured in tenths of a second in the current or next hour.

If the ASC can calculate the maximum end time, then the ASC is to provide that time point, otherwise, the ASC is to provide a value of unknown.

Note: This requirement was deprecated in NTCIP 1202 v03B and replaced by several new requirements that associate the movement with a signal group instead of a channel and support leap seconds.

#### 3.5.4.3.1.1.3.5 Provide Movement Likely End Time [Deprecated]

Upon request from an ASC, a CV Roadside Process shall store the time point when the current movement state will most likely end (e.g., at the end of a protected green or end of a steady red) at an intersection, as defined by DE_Timemark in SAE J2735. The likely end time point may be predicted based on data available to the ASC. The time point is measured in tenths of a second in the current or next hour.

Note: This requirement was deprecated in NTCIP 1202 v03B and replaced by a new requirement, 3.5.4.3.1.1.3.13, Provide Movement Likely End Time V2, which associates the movement with a signal group instead of a channel and supports leap seconds.

#### 3.5.4.3.1.1.3.6 Provide Movement Likely End Time Confidence [Deprecated]

Upon request from an ASC, a CV Roadside Process shall store the statistical confidence that the reported likely end time point of the current movement (e.g., at the end of a protected green or end of a permissive clearance time) at an intersection is accurate. The confidence value is measured as a probability class, as defined by DE_TimeIntervalConfidence in SAE J2735.

© 2023 AASHTO / ITE / NEMA Do Not Copy Without Written Permission

Note: This requirement was deprecated in NTCIP 1202 v03B and replaced by a new requirement, 3.5.4.3.1.1.3.14, Provide Movement Likely End Time Confidence V2, which associates the movement with a signal group instead of a channel and supports leap seconds.

#### 3.5.4.3.1.1.3.7 Provide Movement Next Occurrence [Deprecated]

Upon request from an ASC, a CV Roadside Process shall store the estimated time point when the current movement at an intersection is next allowed to proceed, as defined by DE_Timemark in SAE J2735. The time point is measured in tenths of a second in the current or next hour. This requirement is used to support ECO-driving applications. For fixed time and coordinated signals, next time can be estimated by the ASC, subject to unpredictable events such as sinal preemptions, or failures such as a watchdog failure or a conflict monitor. If next time cannot be determined, a value of unknown is used.

Note: This requirement was deprecated in NTCIP 1202 v03B and replaced by a new requirement, 3.5.4.3.1.1.3.15, Provide Movement Next Occurrence V2, which associates the movement with a signal group instead of a channel and supports leap seconds.

#### 3.5.4.3.1.1.3.8 Provide Movement Status [Deprecated]

Upon request from an ASC, a CV Roadside Process shall store the movement data containing what vehicle (or pedestrian) movements are permitted and when at an intersection. This data is provided by the ASC in a compressed manner so that the data can be transmitted more efficiently.

Note: This requirement was deprecated in NTCIP 1202 v03B and replaced by a new requirement, 3.5.4.3.1.1.9, Provide SPaT Information to a CV Roadside Process, which associates the movement with a signal group instead of a channel and supports leap seconds.

#### 3.5.4.3.1.1.3.9 Provide Movement Time Point V2

Upon request from an ASC, a CV Roadside Process shall store the time point reference that the ASC will report movement start/end times. Time points are in ticks, each tick representing units of tenths of a second, with a value of 0 representing the top of the hour, resulting in a range of 0 to 35999, and a range of 36000 to 36009 during leap seconds. These time points do not need to be synchronized with UTC time or the RSU time.

This time point is not used in the SAE J2735 SPaT message. The CV Roadside Process (or RSU) will convert these time points to UTC time to generate the SPaT message.

#### 3.5.4.3.1.1.3.10 Provide Movement State V2

Upon request from an ASC, a CV Roadside Process shall store the overall current state of a movement (for a signal group) at the intersection. The valid states are defined by DE_MovementPhaseState in SAE J2735. If the movement state is not known with a high level of confidence, a value of unavailable is used.

#### 3.5.4.3.1.1.3.11 Provide Movement Minimum End Time V2

Upon request from an ASC, a CV Roadside Process shall store the time point of the earliest possible end of the current movement state (e.g., at the end of a permissive green or at the end of a permissive yellow) of a movement at an intersection, as defined by DE_Timemark in SAE J2735. If the duration of the current state is fixed, this value indicates the end time. This value can be viewed as the earliest possible time point at which the current interval could end, except when unpredictable events relating to a preemption or priority call come into play and disrupt a currently active timing plan. The time point is measured in tenths of a second in the current or next hour.

Do Not Copy Without Written Permission © 2023 AASHTO / ITE / NEMA

#### 3.5.4.3.1.1.3.12 Provide Movement Maximum End Time V2

Upon request from an ASC, a CV Roadside Process shall store the time point of the latest possible end of the current movement state (e.g., at the end of a protected green or end of a steady red) of a movement at an intersection, as defined by DE_Timemark in SAE J2735. This value can be viewed as the latest possible time point at which the current interval could end, except when unpredictable events relating to a preemption or priority call come into play and disrupt a currently active timing plan. The time point is measured in tenths of a second in the current or next hour.

If the ASC can calculate the maximum end time, then the ASC is to provide that time point; otherwise, the ASC is to provide a value of unknown.

#### 3.5.4.3.1.1.3.13 Provide Movement Likely End Time V2

Upon request from an ASC, a CV Roadside Process shall store the time point when the current movement state will most likely end (e.g., at the end of a protected green or end of a steady red) at an intersection, as defined by DE_Timemark in SAE J2735. The likely end time point may be predicted based on data available to the ASC. The time point is measured in tenths of a second in the current or next hour.

#### 3.5.4.3.1.1.3.14 Provide Movement Likely End Time Confidence V2

Upon request from an ASC, a CV Roadside Process shall store the statistical confidence that the reported likely end time point of the current movement (e.g., at the end of a protected green or end of a permissive clearance time) at an intersection is accurate. The confidence value is measured as a probability class, as defined by DE_TimeIntervalConfidence in SAE J2735.

#### 3.5.4.3.1.1.3.15 Provide Movement Next Occurrence V2

Upon request from an ASC, a CV Roadside Process shall store the estimated time point when the current movement at an intersection is next allowed to proceed (i.e., the movement phase state will be permissive-Movement-Allowed or protected-Movement-Allowed), as defined by DE_Timemark in SAE J2735. The time point is measured in tenths of a second in the current or next hour. This requirement is used to support ECO-driving applications. For fixed time and coordinated signals, next time can be estimated by the ASC, subject to unpredictable events such as signal preemptions, or failures such as a watchdog failure or a conflict monitor. If next time cannot be determined, a value of unknown is used.

#### 3.5.4.3.1.1.3.16 Provide Next Movement State

Upon request from an ASC, a CV Roadside Process shall store the movement state immediately after the current movement state (for a signal group) at the intersection. The valid states are defined by DE_MovementPhaseState in SAE J2735. If the next movement state is not known with a high level of confidence, a value of unavailable is used.

#### 3.5.4.3.1.1.3.17 Provide Next Movement Minimum End Time

Upon request from an ASC, a CV Roadside Process shall store the time point of the earliest possible end of the movement state immediately after the current movement state at the intersection, as defined by DE_Timemark in SAE J2735. If the duration of the next movement state is fixed, this value indicates the end time point. This value can be viewed as the earliest possible time point at which the next interval could end, except when unpredictable events relating to a preemption or priority call come into play and disrupt a currently active timing plan. The time point is measured in tenths of a second in the current or next hour. If the next movement state is unknown, the time point of the earliest possible end time is also unknown.

© 2023 AASHTO / ITE / NEMA Do Not Copy Without Written Permission

#### 3.5.4.3.1.1.3.18 Provide Next Movement Maximum End Time

Upon request from an ASC, a CV Roadside Process shall store the time point of the latest possible end of the movement state immediately after the current movement state at the intersection, as defined by DE_Timemark in SAE J2735. This value can be viewed as the latest possible time point at which the next movement state could end, except when unpredictable events relating to a preemption or priority call come into play and disrupt a currently active timing plan. The time point is measured in tenths of a second in the current or next hour. If the next movement state is unknown, the time point of the latest possible end time is also unknown.

When the interval duration of the next movement state is fixed, such as when the ASC is operating in fixed time or the yellow interval duration, the minimum end time will equal the maximum end time.

#### 3.5.4.3.1.1.3.19 Provide Next Movement Start Time

Upon request from an ASC, a CV Roadside Process shall store the time point when the next movement state immediately after the current movement state at the intersection will start, as defined by DE_Timemark in SAE J2735. If the next movement state is unknown, the time point of the next movement start time is also unknown. If the start time is unknown, a value of unknown is used. If the next movement state is unknown, the start time will also be unknown. If the next movement state is known, the start time is equal to the movement minimum end time of the current interval.

> Note: Start time is always a future time (see CTI 4501, Section 3.3.3.3.5.6 and 3.3.3.3.5.7). Thus, the start time of the current interval is NOT provided.

### 3.5.4.3.1.1.4 Provide Movement Assistance Requirements

The SPaT message in SAE J2735 can also provide potential pedestrian or bicyclist conflicts and queuing information to travelers. The requirements for an ASC to provide this data to an RSU so it can broadcast this information to travelers wishing to traverse through the intersection are defined as follows.

#### 3.5.4.3.1.1.4.1 Provide Lane Connection Queue Length [Deprecated]

Upon request from an ASC, a CV Roadside Process shall store the distance, in meters, from the stop line of the approach lane to the back edge of the last vehicle in the queue, as measured along the center line of the lane, for a specific movement through the intersection. Valid values are 0 to 10000 meters, where 0 indicates no queue or the queue distance is unknown, and 10000 represents all distance ≥ 10,000 meters.

> Note: This requirement was deprecated in NTCIP 1202 v03B and replaced by a new requirement, 3.5.4.3.1.1.4.7, Provide Lane Connection Queue Length V2, which associates a movement with a signal group ID instead of a channel.

#### 3.5.4.3.1.1.4.2 Provide Lane Connection Available Storage Length [Deprecated]

Upon request from an ASC, a CV Roadside Process shall store the distance, in meters, from the stop line of the approach lane to a given distance within which vehicles has a high probability for successfully executing a specific movement during the current cycle through the intersection. This requirement is used to enhance the awareness of vehicles to anticipate if they can pass the stop line of the lane. Used for optimizing the green wave, due to knowledge of vehicles waiting in front of a red light (downstream). Valid values are 0 to 10000 meters, where 0 indicates no queue or the queue distance is unknown, and 10000 represents all distance ≥ 10,000 meters.

> Note: This requirement was deprecated in NTCIP 1202 v03B by the ASC WG because the controller is unable to provide the required value.

Do Not Copy Without Written Permission © 2023 AASHTO / ITE / NEMA

#### 3.5.4.3.1.1.4.3 Provide Lane Connection Stop Line Wait [Deprecated]

Upon request from an ASC, a CV Roadside Process shall store if vehicles for a specific movement through the intersection have to stop on the stop line and not enter the intersection. This value is either on or off, with on indicating vehicles should stop on the stop line. An ASC may provide this information if it determines that a vehicle is unable to clear the intersection because of traffic congestion on the egress lane for the movement maneuver.

> Note: This requirement was deprecated in NTCIP 1202 v03B by the ASC WG because the controller is unable to provide the required value.

#### 3.5.4.3.1.1.4.4 Provide Lane Connection Traveler Detection [Deprecated]

Upon request from an ASC, a CV Roadside Process shall store if any conflicting pedestrians or bicycles are detected for a specific movement through the intersection. This value is either on or off, with off indicating a high certainty that there is no pedestrian or bicycle present.

> Note: This requirement was deprecated in NTCIP 1202 v03B and replaced by a new requirement, 3.5.4.3.1.1.4.8, Provide Lane Connection Traveler Detection V2, which associates a movement with a signal group ID instead of a channel.

#### 3.5.4.3.1.1.4.5 Provide Lane Connection State [Deprecated]

Upon request from an ASC, a CV Roadside Process shall store the current movement state of a lane connection maneuver at the intersection. The valid states are defined by DE_MovementPhaseState in SAE J2735.

> Note: This requirement was deprecated in NTCIP 1202 v03B and replaced by new requirements that associate a movement with a signal group ID instead of a channel.

#### 3.5.4.3.1.1.4.6 Provide Lane Connection Status [Deprecated]

Upon request from an ASC, a CV Roadside Process shall store the status of each lane connection at an intersection in a compressed manner. This data is provided by the ASC in a compressed manner so that the data can be transmitted more efficiently.

> Note: This requirement was deprecated in NTCIP 1202 v03B and replaced by new requirements that associate a movement with a signal group ID instead of a channel.

#### 3.5.4.3.1.1.4.7 Provide Lane Connection Queue Length V2

Upon request from an ASC, a CV Roadside Process shall store the distance, in meters, from the stop line of the approach movement to the back edge of the last vehicle in the queue, as measured along the center line of the lane, for a specific movement through the intersection. Valid values are 0 to 10000 meters, where 0 indicates no queue or the queue distance is unknown, and 10000 represents all distance ≥ 10,000 meters.

#### 3.5.4.3.1.1.4.8 Provide Lane Connection Traveler Detection V2

Upon request from an ASC, a CV Roadside Process shall store if any conflicting pedestrians or bicycles are detected for a specific movement through the intersection. This value is either on or off, with off indicating a high certainty that there is no pedestrian or bicycle present.

© 2023 AASHTO / ITE / NEMA Do Not Copy Without Written Permission

#### 3.5.4.3.1.1.5 Provide Advisory Speed Requirements

The SPaT message in SAE J2735 can also provide speed advisories for specific movements and specific vehicle types. The requirements for an ASC to provide a CV Roadside Process with advisory speed information for a movement through the intersection are defined as follows.

##### 3.5.4.3.1.1.5.1 Provide Advisory Speed Type [Deprecated]

Upon request from an ASC, a CV Roadside Process shall store the speed advisory type for a specific movement traversing the intersection. Valid types of speed advisories are defined by DE_AdvisorySpeedType in SAE J2735. Speed advisories may be configured for specific vehicle types (see Section 3.5.4.2.1.1.9).

> Note: This requirement was deprecated in NTCIP 1202 v03B and replaced by a new requirement, 3.5.4.3.1.1.5.6, Provide Advisory Speed Type V2, which associates a movement with a signal group ID instead of a channel.

##### 3.5.4.3.1.1.5.2 Provide Advisory Speed [Deprecated]

Upon request from an ASC, a CV Roadside Process shall store the advisory speed, in tenths of a meter per second, provided for a specific movement traversing the intersection. Speed advisories may be configured for specific speed advisory types or vehicle types (see Section 3.5.4.2.1.1.9).

> Note: This requirement was deprecated in NTCIP 1202 v03B and replaced by a new requirement, 3.5.4.3.1.1.5.7, Provide Advisory Speed V2, which associates a movement with a signal group ID instead of a channel.

##### 3.5.4.3.1.1.5.3 Provide Advisory Speed Zone [Deprecated]

Upon request from an ASC, a CV Roadside Process shall store the distance, in meters, upstream from the stop bar that a speed advisory is recommended for a movement traversing the intersection. A value of 10000 indicates that the distance is 10,000 meters or greater. Speed advisories may be configured for specific vehicle types (see Section 3.5.4.2.1.1.9).

> Note: This requirement was deprecated in NTCIP 1202 v03B and replaced by a new requirement, 3.5.4.3.1.1.5.8, Provide Advisory Speed Zone V2, which associates a movement with a signal group ID instead of a channel.

##### 3.5.4.3.1.1.5.4 Provide Advisory Speed Vehicle Type [Deprecated]

For a specific movement traversing the intersection, upon request from an ASC, a CV Roadside Process shall store the vehicle type that a speed advisory is intended for. The vehicle type(s) is identified as part of the MAP data (see 3.5.4.2.1.1.9). If no vehicle type is identified, then the advisory speed applies to all vehicles.

> Note: This requirement was deprecated in NTCIP 1202 v03B and replaced by a new requirement, 3.5.4.3.1.1.5.9, Provide Advisory Speed Vehicle Type V2, which associates a movement with a signal group ID instead of a channel.

##### 3.5.4.3.1.1.5.5 Provide Advisory Speed Confidence Level [Deprecated]

For a specific movement traversing the intersection, upon request from an ASC, a CV Roadside Process shall store a confidence value for a speed advisory provided. Valid values for speed confidence are defined by DE_SpeedConfidence in SAE J2735.

Do Not Copy Without Written Permission © 2023 AASHTO / ITE / NEMA

Note: This requirement was deprecated in NTCIP 1202 v03B because it is unclear how a controller would calculate confidence level.

#### 3.5.4.3.1.1.5.6 Provide Advisory Speed Type V2

Upon request from an ASC, a CV Roadside Process shall store the speed advisory type for a specific movement traversing the intersection. Valid types of speed advisories are defined by DE_AdvisorySpeedType in SAE J2735. Speed advisories may be configured for specific vehicle types as defined in the MAP message for the same intersection.

#### 3.5.4.3.1.1.5.7 Provide Advisory Speed V2

Upon request from an ASC, a CV Roadside Process shall store the advisory speed, in tenths of a meter per second, provided for a specific movement traversing the intersection. Speed advisories may be configured for specific speed advisory types (see 3.5.4.3.1.1.5.7) or vehicle types as defined in the MAP message for the intersection.

#### 3.5.4.3.1.1.5.8 Provide Advisory Speed Zone V2

Upon request from an ASC, a CV Roadside Process shall store the distance, in meters, upstream from the stop bar for which a speed advisory is recommended for a movement traversing the intersection. A value of 10000 indicates that the distance is 10,000 meters or greater.

#### 3.5.4.3.1.1.5.9 Provide Advisory Speed Vehicle Type V2

For a specific movement traversing the intersection, upon request from an ASC, a CV Roadside Process shall store the vehicle type that a speed advisory is intended for. The vehicle type(s) is identified in the MAP message for the intersection. If no vehicle type is identified, then the advisory speed applies to all vehicles.

#### 3.5.4.3.1.1.6 Provide Intersection Channel Assignment [Deprecated]

Upon request from an ASC, a CV Roadside Process shall store the intersection identifier that a channel number (output) is assigned to. An ASC may control traffic flow for more than one intersection. This requirement identifies the intersection where the movements controlled by the channel output are located.

#### 3.5.4.3.1.1.7 Provide Road Authority ID

Upon request from an ASC, a CV Roadside Process shall store the Road Authority ID for an intersection. The Road Authority ID is a unique identifier of the agency that operates and/or maintains the intersection or the ASC. The unique identifier in the U.S. is an object identifier consisting of the Geographic Names Information System (GNIS) codes maintained by the U.S. Geological Survey (USGS). The Road Authority ID is defined by DF_RoadAuthorityID in SAE J2735.

#### 3.5.4.3.1.1.8 Provide Signal Phase and Timing Intersection Status V2

Upon request from an ASC, a CV Roadside Process shall store the status of the ASC as part of the signal phase and timing data. The intersection status values are defined by DE_IntersectionStatusObject in SAE J2735.

#### 3.5.4.3.1.1.9 Provide SPaT Information to a CV Roadside Process

Upon request from an ASC, a CV Roadside Process shall store the mandatory SPaT information needed to generate a J2735 SPaT message. This data is provided by the ASC in a compressed manner so that the data can be transmitted more efficiently. The connected vehicle environment is expected to have

© 2023 AASHTO / ITE / NEMA Do Not Copy Without Written Permission

limitations in the data rates and data capacity. This requirement allows the ASC to group sets of data so that the data can be transmitted more efficiently.

#### 3.5.4.3.1.2 Retrieve Current and Next Movement Information Requirements [Deprecated]

If the CV Roadside Process is an SNMP manager and the ASC is an SNMP agent, then the requirements for a CV Roadside Process to retrieve current and next movement information from an ASC are as follows.

> Note: The requirements in this section were deprecated in NTCIP 1202 v03B because the ASC WG decided the ASC is an SNMP manager and the CV Roadside Process is an SNMP agent.

##### 3.5.4.3.1.2.1 Retrieve Intersection Identifier [Deprecated]

Upon request from a CV Roadside Process, the ASC shall provide the intersection identifiers for the intersections that the signal phase and timing data is for. An ASC may control traffic flow for more than one intersection. An intersection identifier is used to uniquely identify an intersection within a region.

##### 3.5.4.3.1.2.2 Retrieve Signal Phase and Timing Intersection Status [Deprecated]

Upon request from a CV Roadside Process, an ASC shall provide the status of the ASC as part of the signal phase and timing data. The intersection status values are defined by DE_IntersectionStatusObject in SAE J2735.

##### 3.5.4.3.1.2.3 Retrieve Movement Status Requirements [Deprecated]

The SPaT message that is broadcasted by an RSU to connected vehicles includes information about what vehicle (or pedestrian) movements are permitted at a signalized intersection. To broadcast this information the CV Roadside Process needs movement data from the ASC. The requirements to allow a CV Roadside Process to retrieve movement data from an ASC are defined as follows.

###### 3.5.4.3.1.2.3.1 Retrieve Movement Time Point [Deprecated]

Upon request from a CV Roadside Process, an ASC shall provide the time point reference that the ASC will report movement start/end times. Time points are provided in units of tenths of a second, with a value of 0 representing the top of the hour, resulting in a range of 0 to 35999. These time points do not need to be synchronized with UTC time or the RSU time.

###### 3.5.4.3.1.2.3.2 Retrieve Movement Time Point—Milliseconds [Deprecated]

Upon request from a CV Roadside Process, an ASC shall provide the time point reference that the ASC will report movement start/end times in milliseconds. The milliseconds may be used by the RSU to determine if there are any time drifts in the time points provided by the ASC. These time points do not need to be synchronized with UTC time or the RSU time.

###### 3.5.4.3.1.2.3.3 Retrieve Movement State [Deprecated]

Upon request from a CV Roadside Process, an ASC shall provide the overall current state of the movements (for a channel) at the intersection. The valid states are defined by DE_MovementPhaseState in SAE J2735.

###### 3.5.4.3.1.2.3.4 Retrieve Movement Minimum End Time [Deprecated]

Upon request from a CV Roadside Process, an ASC shall provide the time point of the earliest possible end of the current movement state (e.g., end of a permissive green or end of a permissive yellow) at an intersection. If the duration of the current state is fixed, this value indicates the end time. This value can

Do Not Copy Without Written Permission © 2023 AASHTO / ITE / NEMA

be viewed as the earliest possible time point at which the current movement state could end, except when unpredictable events relating to a preemption or priority call come into play and disrupt a currently active timing plan. The time point is measured in tenths of a second in the current or next hour.

#### 3.5.4.3.1.2.3.5 Retrieve Movement Maximum End Time [Deprecated]

Upon request from a CV Roadside Process, an ASC shall provide the time point of the latest possible end of the current movement state (e.g., end of a protected green or end of a steady red) at an intersection. This value can be viewed as the latest possible time at which the current movement state could end, except when unpredictable events relating to a preemption or priority call come into play and disrupt a currently active timing plan. The time point is measured in tenths of a second in the current or next hour.

#### 3.5.4.3.1.2.3.6 Retrieve Movement Likely End Time [Deprecated]

Upon request from a CV Roadside Process, an ASC shall provide the time point of the most likely end time of the current movement state (e.g., at the end of a protected green or end of a steady red) at an intersection. The likely end time may be predicted based on data available to the ASC. The time point is measured in tenths of a second in the current or next hour.

#### 3.5.4.3.1.2.3.7 Retrieve Movement Likely End Time Confidence [Deprecated]

Upon request from a CV Roadside Process, an ASC shall provide the statistical confidence that the reported likely end time point for the current movement state (e.g., at the end of a protected green or end of a permissive clearance time) at an intersection is accurate. The confidence value is measured as a probability class, as defined by DE_TimeIntervalConfidence in SAE J2735.

#### 3.5.4.3.1.2.3.8 Retrieve Movement Next Occurrence [Deprecated]

Upon request from a CV Roadside Process, an ASC shall provide the estimated time point when a pending (i.e., currently stopped) movement at an intersection is next allowed to proceed. The time point is measured in tenths of a second in the current or next hour. The estimated time point is provided only when the movement state is not allowed to proceed (i.e., a value of undefined is returned when the movement is allowed to proceed, such as during a green or flashing-red interval). This requirement is used to support ECO-driving applications.

#### 3.5.4.3.1.2.3.9 Retrieve Movement Status [Deprecated]

Upon request from a CV Roadside Process, an ASC shall provide the movement data containing what vehicle (or pedestrian) movements are permitted and when at an intersection. This data is provided by the ASC in a compressed manner so that the data can be transmitted more efficiently.

### 3.5.4.3.1.2.4 Retrieve Movement Assistance Requirements [Deprecated]

The SPaT message in SAE J2735 can also provide potential pedestrian or bicyclist conflicts and queuing information to travelers. The requirements for a CV Roadside Process to retrieve this data from an ASC so the RSU can broadcast this information to travelers wishing to traverse through the intersection are defined as follows.

#### 3.5.4.3.1.2.4.1 Retrieve Lane Connection Queue Length [Deprecated]

Upon request from a CV Roadside Process, an ASC shall provide the distance, in meters, from the stop line of the approach lane to the back edge of the last vehicle in the queue, as measured along the center line of the lane, for a specific movement through the intersection. Valid values are 0 to 10000 meters, where 0 indicates no queue or the queue distance is unknown, and 10000 represents all distance ≥ 10,000 meters.

© 2023 AASHTO / ITE / NEMA Do Not Copy Without Written Permission

#### 3.5.4.3.1.2.4.2 Retrieve Lane Connection Available Storage Length [Deprecated]

Upon request from a CV Roadside Process, an ASC shall provide the distance, in meters, from the stop line of the approach lane to a given distance within which vehicles has a high probability for successfully executing a specific movement during the current cycle through the intersection. This requirement is used to enhance the awareness of vehicles to anticipate if it can pass the stop line of the lane. Used for optimizing the green wave, due to knowledge of vehicles waiting in front of a red light (downstream). Valid values are 0 to 10000 meters, where 0 indicates no queue or the queue distance is unknown, and 10000 represents all distance ≥ 10,000 meters.

#### 3.5.4.3.1.2.4.3 Retrieve Lane Connection Stop Line Wait [Deprecated]

Upon request from a CV Roadside Process, an ASC shall provide if vehicles for a specific movement through the intersection have to stop on the stop line and not enter the intersection. This value is either on or off, with on indicating vehicles should stop on the stop line. An ASC may generate this information if it determines that a vehicle is unable to clear the intersection because of traffic congestion on the egress lane for the movement maneuver.

#### 3.5.4.3.1.2.4.4 Retrieve Lane Connection Traveler Detection [Deprecated]

Upon request from a CV Roadside Process, an ASC shall provide if any conflicting pedestrians or bicycles are detected for a specific movement through the intersection. This value is either on or off, with off indicating a high certainty that there is no pedestrian or bicycle present.

#### 3.5.4.3.1.2.4.5 Retrieve Lane Connection State [Deprecated]

Upon request from a CV Roadside Process, an ASC shall provide the overall current state of a specific movement maneuver at the intersection. The valid states are defined by DE_MovementPhaseState in SAE J2735.

#### 3.5.4.3.1.2.4.6 Retrieve Lane Connection Status [Deprecated]

Upon request from a CV Roadside Process, an ASC shall provide the status of each lane connection at an intersection in a compressed manner. This data is provided by the ASC in a compressed manner so that the data can be transmitted more efficiently.

### 3.5.4.3.1.2.5 Retrieve Advisory Speed Requirements [Deprecated]

The SPaT message in SAE J2735 can also provide speed advisories for specific movements and specific vehicle types. The requirements for a CV Roadside Process to retrieve from an ASC advisory speed information for a movement through the intersection are defined as follows.

#### 3.5.4.3.1.2.5.1 Retrieve Advisory Speed Type [Deprecated]

Upon request from a CV Roadside Process, an ASC shall provide the speed advisory type for a specific movement traversing the intersection. Valid types of speed advisories are defined by DE_AdvisorySpeedType in SAE J2735. Speed advisories may be configured for specific vehicle types (see Section 3.5.4.2.1.1.9).

#### 3.5.4.3.1.2.5.2 Retrieve Advisory Speed [Deprecated]

Upon request from a CV Roadside Process, an ASC shall provide the advisory speed, in tenths of a meter per second, for a specific movement traversing the intersection. Speed advisories may be configured for specific speed advisory types or vehicle types.

Do Not Copy Without Written Permission © 2023 AASHTO / ITE / NEMA

#### 3.5.4.3.1.2.5.3 Retrieve Advisory Speed Zone [Deprecated]

Upon request from a CV Roadside Process, an ASC shall provide the distance, in meters, upstream from the stop bar that a speed advisory is recommended for a movement traversing the intersection. A value of 10000 indicates that the distance is 10,000 meters or greater. Speed advisories may be configured for specific vehicle types (see Section 3.5.4.2.1.1.9).

#### 3.5.4.3.1.2.5.4 Retrieve Advisory Speed Vehicle Type [Deprecated]

For a specific movement traversing the intersection, upon request from a CV Roadside Process, an ASC shall provide the vehicle type that a speed advisory is intended for. The vehicle type(s) is identified as part of the MAP data (see 3.5.4.2.1.1.9). If no vehicle type is identified, then the advisory speed applies to all vehicles.

#### 3.5.4.3.1.2.5.5 Retrieve Advisory Speed Confidence Level [Deprecated]

For a specific movement traversing the intersection, upon request from a CV Roadside Process, an ASC shall provide a confidence value for a speed advisory provided. Valid values for speed confidence are defined by DE_SpeedConfidence in SAE J2735.

#### 3.5.4.3.1.2.6 Retrieve Intersection Channel Assignment [Deprecated]

Upon request from a CV Roadside Process, an ASC shall provide the intersection identifier that a channel number (output) is assigned to. An ASC may control traffic flow for more than one intersection. This requirement identifies the intersection where the movements controlled by the channel output are located.

### 3.5.4.3.2 Exchange Next Occurrence of a Movement Requirements

The following requirements allow an ASC to exchange the time of the next occurrence of a movement with a CV Roadside Process.

#### 3.5.4.3.2.1 Provide Movement Next Occurrence [Deprecated]

Upon request from an ASC, a CV Roadside Process shall store the estimated time point when a pending (i.e., currently stopped) movement at an intersection is next allowed to proceed. This requirement is valid if the ASC is an SNMP manager and the CV Roadside Process is an SNMP agent. The time point is measured in tenths of a second in the current or next hour. The estimated time point is provided only when the movement state is not allowed to proceed (i.e., a value of undefined is returned when the movement is allowed to proceed, such as during a green or flashing-red interval). This requirement is used to support ECO-driving applications.

> Note: This requirement was deprecated in NTCIP 1202 v03B and replaced by a new requirement, 3.5.4.3.1.1.3.15, Provide Movement Next Occurrence V2, which associates the movement with a signal group instead of a channel and supports leap seconds.

#### 3.5.4.3.2.2 Retrieve Movement Next Occurrence [Deprecated]

Upon request from a CV Roadside Process, an ASC shall provide the estimated time point when a pending movement at an intersection is next allowed to proceed. This requirement is valid if the CV Roadside Process is an SNMP manager and the ASC is an SNMP agent. The time point is measured in tenths of a second in the current or next hour. The estimated time point is provided only when the movement state is not allowed to proceed (i.e., a value of undefined is returned when the movement is allowed to proceed, such as during a green or flashing-red interval). This requirement is used to support ECO-driving applications.

© 2023 AASHTO / ITE / NEMA Do Not Copy Without Written Permission

#### 3.5.4.3.3 Exchange Presence of Connected Device Requirements

The following requirements allow an ASC to exchange the presence of connected devices detected by a CV Roadside Process in the vicinity of the ASC. The ASC can use this data as calls for actuated movements or as inputs to determine traffic demand at the intersection. The following requirements allow an ASC to exchange the presence of connected devices with a CV Roadside Process.

##### 3.5.4.3.3.1 Retrieve Connected Devices Presence Information Requirements

If the ASC is an SNMP manager and the CV Roadside Process is an SNMP agent, then the requirements for an ASC to retrieve information about the presence of connected devices from a CV Roadside Process are as follows.

###### 3.5.4.3.3.1.1 Retrieve Actuation Report (ASC)

Upon request from an ASC, a CV Roadside Process shall provide the actuation report for connected device detectors configured by the CV Roadside Process. An actuation report indicates the connected device detectors that are actuated at the time, based on if any BSMs or PSMs are detected within the detection zone and if the BSM or PSM satisfies the configuration criteria.

###### 3.5.4.3.3.1.2 Retrieve Detection Report (ASC)

Upon request from an ASC, a CV Roadside Process shall provide the detection report for connected device detectors configured by the CV Roadside Process. The processed data that can be provided by a detection report are volume, average speed, average travel time, queue length, average gap, and platoon length.

##### 3.5.4.3.3.2 Provide Connected Devices Presence Information Requirements [Deprecated]

If the CV Roadside Process is an SNMP manager and the ASC is an SNMP agent, then the requirements for a CV Roadside Process to provide information about the presence of connected devices to an ASC are as follows.

###### 3.5.4.3.3.2.1 Provide Actuation Report [Deprecated]

Upon request from a CV Roadside Process, an ASC shall store the actuation report for connected device detectors configured by the CV Roadside Process.

###### 3.5.4.3.3.2.2 Provide Detection Report [Deprecated]

Upon request from a CV Roadside Process, the ASC shall store the detection report for connected device detectors configured by the CV Roadside Process.

#### 3.5.4.3.4 Exchange Roadway Geometry Plan Information Requirements

A broadcasted MAP data message provides roadway geometry information to connected devices in the vicinity of the RSU. A roadway geometry plan defines what roadway geometry data is being broadcasted and contains the roadway configuration for one or more intersections. The requirements for an ASC and a CV Roadside Process to exchange the roadway geometry plan currently broadcasted by the RSU are defined in the following.

##### 3.5.4.3.4.1 Retrieve Roadway Geometry Plan Requirements

If the ASC is an SNMP manager and the CV Roadside Process is an SNMP agent, then the requirements for an ASC to retrieve from a CV Roadside Process what MAP plan is being broadcasted are as follows.

Do Not Copy Without Written Permission © 2023 AASHTO / ITE / NEMA

#### 3.5.4.3.4.1.1 Retrieve MAP Plan in Effect

Upon request from an ASC, a CV Roadside Process shall provide the MAP plan currently being broadcasted by the RSU. The ASC may use this information to determine if the signal pattern in effect is compatible with the roadway geometry data broadcasted by the RSU.

### 3.5.4.3.4.2 Provide Roadway Geometry Plan Requirements [Deprecated]

If the CV Roadside Process is an SNMP manager and the ASC is an SNMP agent, then the requirements for a CV Roadside Process to provide what MAP plan is being broadcasted to an ASC are as follows.

#### 3.5.4.3.4.2.1 Provide MAP Plan in Effect [Deprecated]

Upon request from a CV Roadside Process, the ASC shall store the MAP plan being broadcasted by the RSU. The ASC may use this information to determine if the signal pattern in effect is compatible with the roadway geometry data broadcasted by the RSU.

### 3.5.4.3.4.3 Confirm MAP Plan Compatibility

An ASC shall confirm that the MAP plan broadcasted by an RSU is compatible with the SPaT data generated. An ASC generates SPaT data for consumption by travelers; however, this SPaT data has limited value unless it is broadcast in conjunction with roadway geometry data, relating the movement information with a lane. Thus it is important that the SPaT data broadcasted by an RSU is compatible with the MAP plan also broadcasted by the RSU. If the SPaT data is not compatible with the MAP plan currently broadcasted, the SPaT data should not be broadcasted by the RSU.

## 3.5.5 Backward Compatibility Requirements

The following defines the requirements for backward compatibility.

### 3.5.5.1 NTCIP 1202 v01—Configure Special Function State

Upon request from a management station, the ASC shall store if an associated special function output signal is on or off in the NTCIP 1202 v01 format.

## 3.6 Supplemental Non-Communications Requirements

Supplemental requirements for ASC are provided in the following subsections. These requirements do not directly involve communications via the communications interfaces addressed by NTCIP 1202 v03, but, if the supplemental requirement is selected in the PRL, the implementation shall fulfill the stated requirement to claim conformance to NTCIP 1202 v03.

## 3.6.1 Response Time for Requests

The ASC processes all requests in accordance with all of the rules of the relevant base standards (i.e., NTCIP 1103 v03 and NTCIP 2301), including updating the value in the database and initiating the transmission of the appropriate response (assuming that the ASC has permission to transmit) within the Response Time. If the specification does not indicate the Response Time, the Response Time shall be 25 milliseconds. The Response Time is measured as the time between the receiving of the last byte of the request and the transmission of the first byte of the response.

## 3.6.2 Condition-Based Maximum Transmission Start Time

When a user-specified condition-based exception reporting occurs, the ASC shall initiate the transmission of the appropriate report within the Maximum Transmission Start Time. If the agency specification does not indicate the Condition-based Maximum Transmission Start Time, the Condition-based Maximum

© 2023 AASHTO / ITE / NEMA Do Not Copy Without Written Permission

Transmission Start Time shall be 10 seconds. The Condition-based Maximum Response Start Time is measured as the time between the time the ASC first detects the occurrence of the event to the time the ASC initiates communications with the management station (e.g., handshake).

### 3.6.3 Signal Phase and Timing Data Performance Requirements

This section defines the performance requirements for the exchange of signal phase and timing data in a connected vehicle environment. The applicable performance requirements depend on the architecture implemented.

#### 3.6.3.1 SPaT Maximum Transmission Start Time

The ASC shall begin initiating the transmission (SET) of all SPaT data object(s) that changed to the CV Roadside Process no more than the SPaT Maximum Transmission Start Time after the change to the ground truth of a channel (i.e., when the controller changes the command to the load switch). If the agency specification does not indicate the SPaT Maximum Transmission Start Time, the SPaT Maximum Transmission Start Time shall be 10 milliseconds. The data object may be an individual data object definition or a block object definition.

#### 3.6.3.2 Movement Time Point Minimum Transmission Rate

If the ASC is the SNMP manager and the CV Roadside Process is the SNMP agent, the ASC shall transmit (SET) the time point reference to the CV Roadside Process no less than the Movement Time Point Minimum Transmission Rate. If the agency specification does not indicate the Movement Time Point Minimum Transmission Rate, the Movement Time Point Minimum Transmission Rate shall be once per 100 milliseconds.

#### 3.6.3.3 SPaT-data Request Transmission Rate [Deprecated]

If the ASC is the SNMP agent and the CV Roadside Process is the SNMP manager, the CV Roadside Process will initiate a request (GET) of all applicable SPaT data objects (Note: Defined as any object in the signalStatusTable), to the ASC at a rate of nominal Request Transmission Rate. If the specification does not indicate the nominal SPaT-data Request Transmission Rate, the nominal SPaT-data Request Transmission Rate shall be once per 100 milliseconds. The SPaT-data Request Transmission Rate measured as the time between consecutive transmissions where the CV Roadside Process initiates communications with the ASC (e.g., handshake) to request all applicable SPaT data objects from the ASC.

#### 3.6.3.4 Condition-Based SPaT Maximum Transmission Start Time [Deprecated]

If the ASC is the SNMP agent and the CV Roadside Process is the SNMP manager, and the ASC is configured for condition-based exception reporting of SPaT data (Note: Defined as any object in the signalStatusTable), the ASC shall initiate the transmission of the appropriate report within the Condition-based SPaT Maximum Transmission Start Time. If the agency specification does not indicate the Condition-based SPaT Maximum Transmission Start Time, the Condition-based SPaT Maximum Transmission Start Time shall be 10 milliseconds. The Condition-based Maximum Response Start Time is measured as the time between the time the ASC first detects a change in the value of any SPaT data (defined as any object in the signalStatusTable) to the time the ASC initiates communications with the CV Roadside Process (e.g., handshake). The report may consist of one or more data object definitions or one or more block object definitions.

#### 3.6.3.5 SPaT Latency [Deprecated]

SPaT latency shall not exceed ± 50 milliseconds. SPaT latency is defined as the time difference between SPaT data available to the RSU and the assertion of corresponding ASC outputs controlling the signal heads.

Do Not Copy Without Written Permission © 2023 AASHTO / ITE / NEMA

#### 3.6.3.6 SPaT Maximum Transmission Rate

The ASC shall initiate the transmission (SET) of all SPaT data object(s) to the CV Roadside Process at least once every 100 millisecond interval, +/- 2 milliseconds. The data object(s) may be individual data object definitions or a block object definition. The 100 millisecond interval is equivalent to the tenth of a second processing cycle for the traffic signal controller. Note that NEMA TS 2 allows a tolerance of 2% in the framing.

#### 3.6.3.7 SPaT Time Accuracy

The point in time reported by the controller in the SPaT data shall be within 100 milliseconds of the time the signal indication changes. When the time of change is known, such as the end of a yellow interval, the minEndTime reported by the controller is equal to the maxEndTime reported. That time should be within 100 milliseconds of the actual time of change (as depicted by the change in ground truth at the load switch). For example, if the time of change occurs 1 ms after midnight, the SPaT can report time of change as midnight or 100 milliseconds after midnight.

© 2023 AASHTO / ITE / NEMA Do Not Copy Without Written Permission

# Section 4
# Dialogs [Normative]

Section 4 defines the dialogs (i.e., sequence of data exchanges) that fulfill various Data Exchange requirements defined in Section 3.5. As SNMP communications are largely driven by the management station, most of the requirements define how the device shall respond to the various possible actions a management station might take.

The NTCIP standards effort is based on SNMP. This protocol offers a high degree of flexibility as to how the management station structures its requests. For example, with SNMP, the management station can do any of the following:

a) Send only those requests that are critical at the current time, whereas a standardized dialog typically sends requests relating to all associated data, regardless of whether it is critical for current purposes
b) Combine a number of requests in a single packet, whereas a standardized dialog dictates the exact contents of each packet
c) Separate a group of requests into multiple packets, whereas a standardized dialog dictates the exact contents of each packet
d) Interweave requests from multiple dialogs, whereas a standardized dialog dictates the exact ordering of messages, which are not interrupted with other messages

This flexibility can be a powerful tool allowing a management system to optimize the use of communication facilities, which is the primary reason that SNMP was chosen as the core NTCIP protocol. However, the flexibility also means that there are numerous allowable variations in the management process that a management station may choose to use and that an agent shall support to conform to NTCIP 1202 v03.

Unfortunately, this flexibility presents a challenge to ensuring interoperability. While a conformant ASC is required to support all mandatory operations defined within this standard, ensuring that a given ASC actually supports every possible combination of mandatory and optional requirements would be impractical. Instead, most agencies only require that the device be tested to a standard set of procedures, which would use standardized dialogs (as defined in Section 4.2, Annex G, and Annex H.2). To improve communications efficiency, management stations may use non-standard dialogs (e.g., a combination of GET and/or SET requests that is not defined as a standardized dialog, but which a conformant device is required to support according to the ACCESS rules defined in Section 5). Because these more efficient dialogs may not be known until the acquisition of the management station, which may be years after the acquisition of the device, there is a potential for an interoperability problem to arise.

To overcome this complication, Section 4 defines a lowest common denominator approach to communications between a management station and a device. It defines the standardized dialog for each Data Exchange Requirement. Management stations may support other dialogs to fulfill these same requirements, as long as these dialogs are consistent with the rules defined in NTCIP 1202 v03. Such a management station is termed a “consistent management station.” A consistent management station interoperates with any “conformant” device. However, since an agency cannot be certain that a device is 100% conformant to every possible scenario (given practical constraints), interoperability problems could still arise.

Do Not Copy Without Written Permission © 2023 AASHTO / ITE / NEMA

A “conformant management station” is required to offer a mode in which it only uses the standardized dialogs as defined in Section 4. With this limited definition, there is relatively little variability in what constitutes a conformant management station. Thus, fully testing a management station for conformance is a relatively straightforward process that can be done within the practical constraints faced by most procuring agencies. Thus, a conformant management station provides an agency with a much greater chance of achieving interoperability with off-the-shelf devices that have been tested against NTCIP 2104 v03, and the designation of such a system is intended to provide a guaranteed base level of interoperability.

The rules for the standardized dialogs follow:

a) The dialogs are defined by a sequence of GET or SET requests. These requests shall equate to the GET and SET operations defined in Annexes G.1 and G.3 and shall be transmitted as a single message.
b) The contents of each request are identified by an object name. Each object name consists of an object type and an instance identifier. Definitions of each object type are provided in Section 5 and NTCIP 1201 v03. The meaning of the instance identifier is provided by these same definitions coupled with standard SNMP rules (see RFC 1212).
c) Each message shall contain all of the objects as shown, unless otherwise indicated.
d) A message shall not contain any other objects.
e) The contents of each message sent by the management station may appear in any order.

   Note: Ideally, the order of objects should match the order as shown in NTCIP 1202 v03 to provide the highest probability of interoperability. However, it is recognized that many implementations may use off-the-shelf software, which may prevent the designation of an exact ordering of objects and as a result, this ordering is not a requirement of NTCIP 1202 v03.

f) After sending a message, the management station shall not transmit any other data across the communications channel until the earlier of:
   1) The management station receiving a response from the device; or
   2) The expiration of the maximum response time.
g) If the response indicates an error occurred in the operation, the management station shall exit the process, unless specific error-handling rules are specified by the dialog.
h) Dialogs containing a sequence of only GET requests may request objects in any order.

However, since consistent management stations can alter the order of requests, this standard defines rules for when certain data exchanges are allowed. Unless otherwise indicated, a conformant device shall allow an object to be retrieved (through a GET request) or altered (through a SET request, if the object is writable) at any time.

Finally, Section 4 presents an overview of all of the data defined by this standard, prior to presenting the complete definition for each piece of data in Section 5.

### 4.1 Tutorial [Informative]

The Requirements Traceability Matrix (RTM) in Annex A.3 identifies the standardized dialog that can be used to achieve each of the data exchange requirements defined in Section 3.5. Simple data exchange requirements reference one of the generic SNMP dialogs along with a list of data elements (see Annex G). These equate to a single message being sent (e.g., a GET request) containing the referenced data elements followed by the appropriate response per the generic dialog specification.

Section 4.2 and Annex H.2 define the standardized dialogs for the more complicated data exchange requirements. Each dialog in these sections defines how the system is designed to work for a given data exchange requirement. It indicates the sequence of actions that a management station has to follow to provide the specific service. Each of these dialogs is defined by a number of steps. Many of the steps

© 2023 AASHTO / ITE / NEMA Do Not Copy Without Written Permission

reference data elements that are defined in Section 5 or in NTCIP 1201 v03. These data elements are also shown in the corresponding row of the RTM along with their precise section number.

The dialogs may also be accompanied by an informative figure that provides a graphical depiction of the normative text. The figures conform to the Unified Modeling Language and depict the management station as an outside actor sending a series of messages to the device and the device returning responses. If there is any conflict between the figure and the text, the text takes precedence.

### 4.2 Specified Dialogs

This section provides the standardized data exchange sequences that can be used by management stations to ensure interoperable implementations for the various data exchange requirements identified in Section 3. Diagrams and graphical representations are included to supplement the text (i.e., not used as a replacement for the text). This section only includes dialogs that have special semantics or impose special restrictions on the operations that are allowed.

#### 4.2.1 Get Block Data

Note: This is a generic dialog that is referenced with specific block names.

The standardized dialog for a management station to retrieve block objects (see Figure 7) shall be as follows:

a) (Precondition) The management station shall be aware of the block data type to be retrieved (0x00 for a Standard Data Block).
b) (Precondition) The management station shall be aware of the block data identifier to be retrieved.
c) (Precondition) The management station shall be aware of the block index value or values (up to 5 different block index values per block object retrieval) to be retrieved (if needed).
d) (Precondition) The management station shall be aware of the block quantity value or values (up to 5 different block quantity values per block object retrieval) to be retrieved (if needed).
e) The management station shall SET the 'ascBlockGetControl' object to ensure that the requested block object and values are valid and supported by the device.
f) If the validity checks fail, the device shall respond with an error status of 'badValue (3)' and the 'ascBlockErrorStatus' object with the value that generated the error, then exit.
g) If the validity check does not fail, the management station shall GET the 'ascBlockData' object utilizing the values in the 'ascBlockGetControl' object.

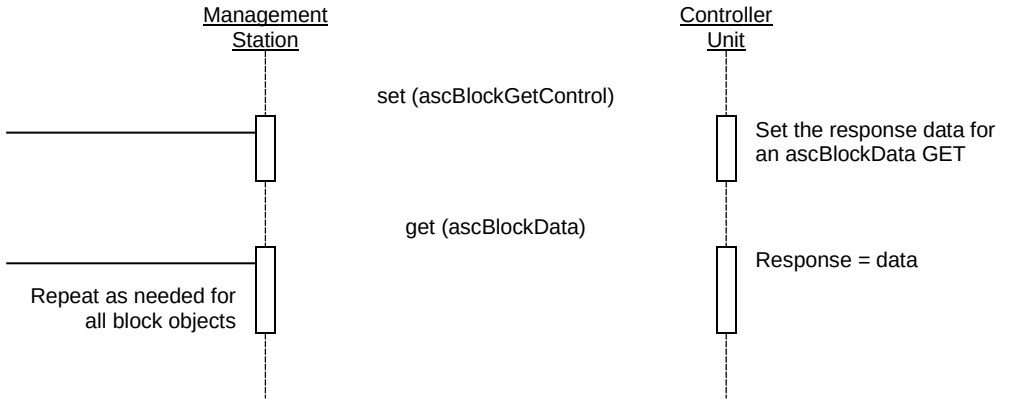


**Figure 7 Get Block Data**

 © 2023 AASHTO / ITE / NEMA

### 4.2.2 Set Complex Configuration Parameters (called 'P2' Objects)

Note: This is a generic dialog that is referenced with specific object names.

The standardized dialog for a management station to configure complex configuration parameters ('P2' objects) (see Figure 8) shall be as follows:

a) (Precondition) The management station shall use the same community name in all data exchanges until the ASC database has been successfully updated.
b) The management station shall GET the 'dbCreateTransaction' object until the response value is 'normal' or 'done.' This step indicates that the database is operational and can be modified.
c) The management station shall SET the 'dbCreateTransaction' object to a value of 'transaction' until the response value is 'transaction.'
d) The management station shall SET all objects provided to this dialog to their desired values referenced into the device buffer.
e) Once all objects provided to this dialog have been set to the desired values into the device buffer, the management station shall SET the 'dbCreateTransaction' object to a value of 'verify" to initiate a consistency check (see Section 4.3.2) to analyze the objects 'in context' treating them as interrelated values.
f) Once the consistency check is complete, the ASC will automatically change the value of 'dbCreateTransaction' to 'done.'
g) The management station shall GET the 'dbCreateTransaction' object until the response value is 'done.'
h) The management station shall GET the 'dbVerifyStatus' object until the response value is 'doneWithError' or 'doneWithNoError.'
i) If dbVerifyStatus equals 'doneWithNoError' then the ASC shall implement the contents of the device buffer (buffer data) and the management station shall SET the 'dbCreateTransaction' object to 'normal' or to 'transaction' if another transaction is to be performed. Exit the process.
j) If dbVerifyStatus equals 'doneWithError' the management station shall GET the 'dbVerifyError' object to determine the error with the consistency check.
k) The ASC will discard the contents of the device buffer (buffer data).

© 2023 AASHTO / ITE / NEMA Do Not Copy Without Written Permission

See NTCIP 1201 v03, Sections 2.3 and Annex A.1 for additional information.

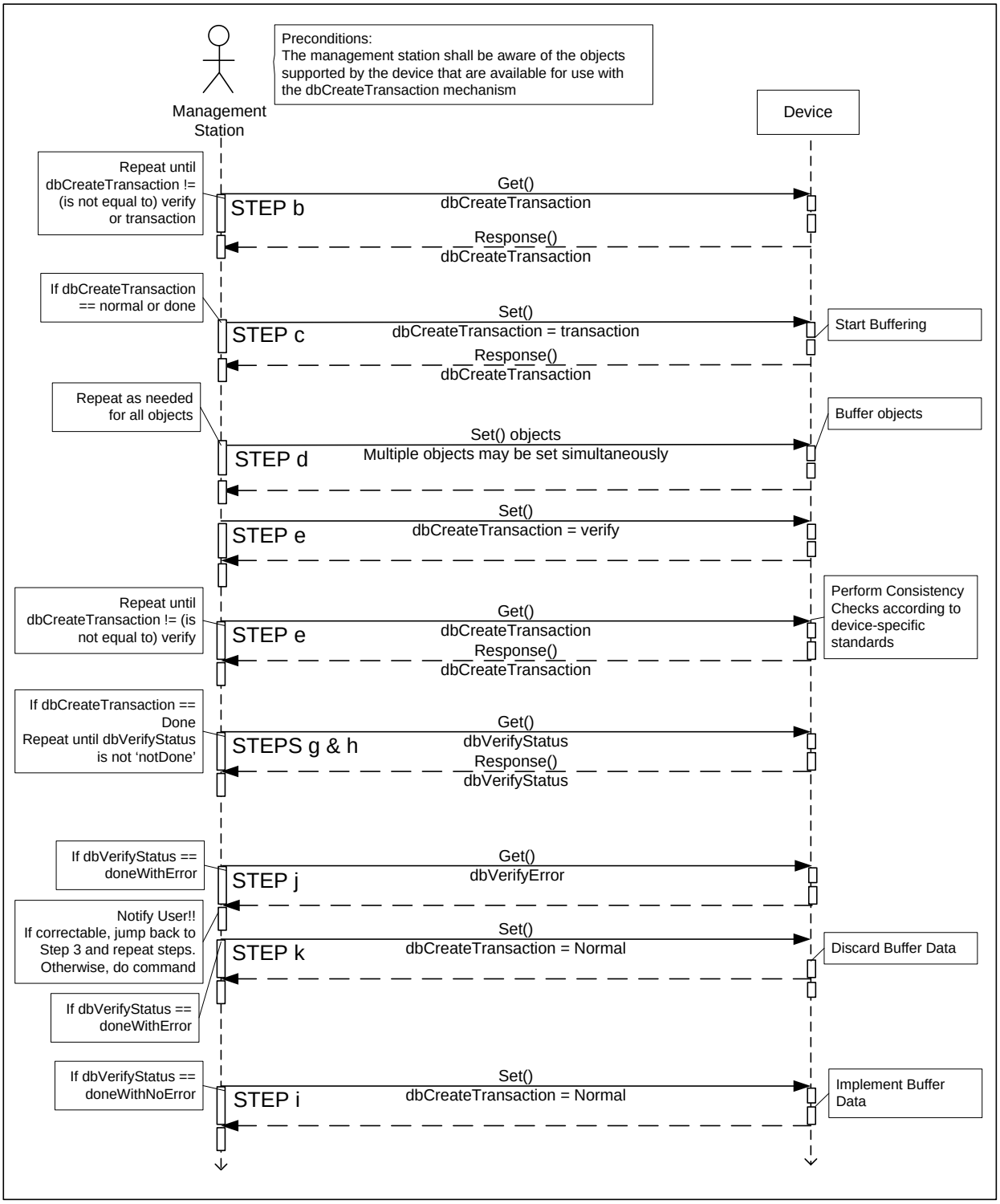


**Figure 8 Set Complex Configuration Parameters**

 © 2023 AASHTO / ITE / NEMA

### 4.2.3 Set Block Data

Note: This is a generic dialog that is referenced with specific block names.

The standardized dialog for a management station to configure block objects shall be as follows:

a) (Precondition) The management station shall be aware of the block data type to be configured (0x00 for a Standard Data Block).
b) (Precondition) The management station shall be aware of the block data identifier to be configured.
c) (Precondition) The management station shall be aware of the block index value to be configured (if needed).
d) (Precondition) The management station shall be aware of the block quantity value to be configured (if needed).
e) The management station shall GET the 'dbCreateTransaction' object to ensure that the database is operational and can be modified, which would be indicated by a value of 'normal' or 'done.'
f) The management station shall SET the 'dbCreateTransaction' object to a value of 'transaction' and ensure that the 'dbCreateTransaction' object has a value of 'transaction.'
g) The management station shall SET the 'ascBlockData' object.
h) The management station shall SET all objects (to their desired values) referenced in the buffer.
i) Once all objects have been set to the desired values in the buffer, the management station shall SET the 'dbCreateTransaction' object to a value of 'verify' to initiate a consistency check (see Section 4.3.2) to analyze the objects 'in context' treating them as an interrelated value. Once complete, the ASC will automatically change the value of 'dbCreateTransaction' to 'done.'
j) The management station shall then retrieve (GET) the 'dbVerifyStatus' (value 'doneWithNoError') and 'dbVerifyError' objects to ensure that the consistency check was successful.

See NTCIP 1201 v03, Sections 2.3 and Annex A.1 for additional information.

© 2023 AASHTO / ITE / NEMA Do Not Copy Without Written Permission

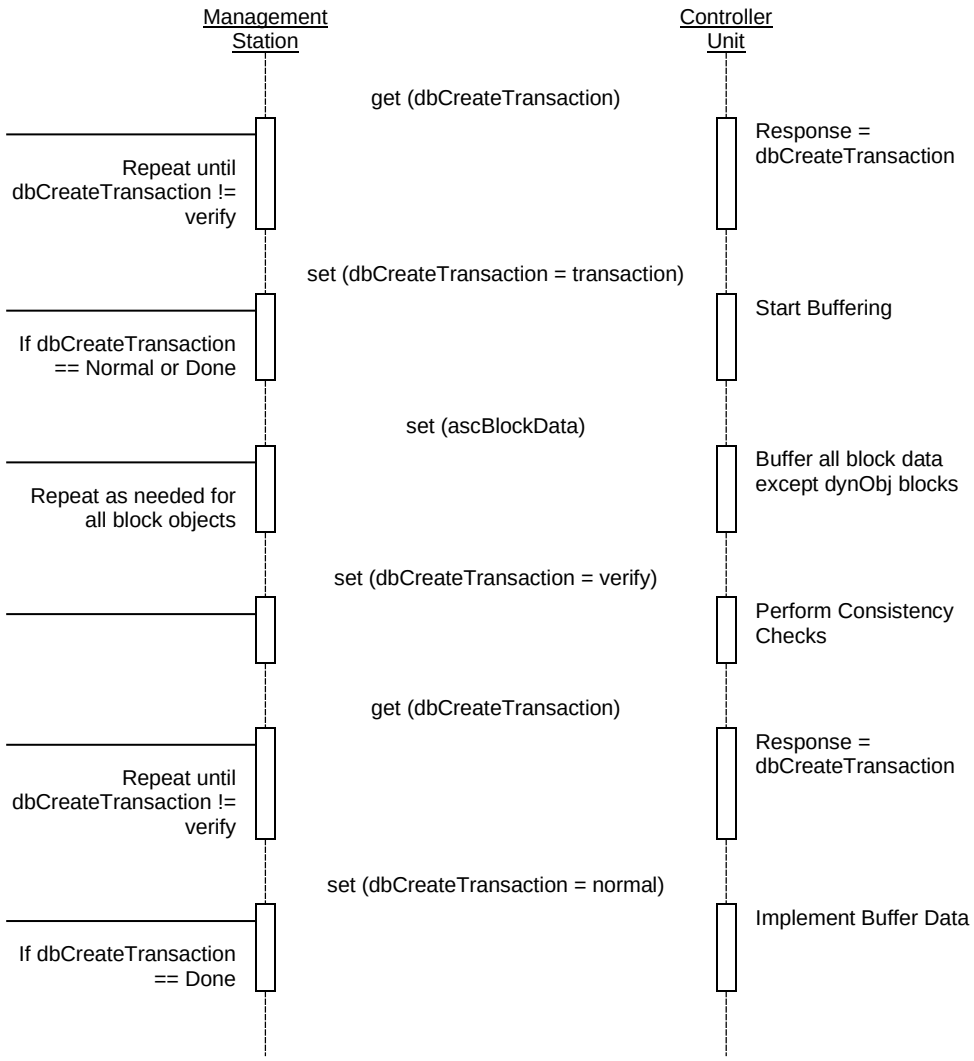


**Figure 9 Set Block Objects**

### 4.2.4 Setup, Programming, and Processing of I/O Mapping

Because the I/O mapping directly affects the operation of the traffic cabinet, the objects to configure them are considered complex configuration parameters ('P2' objects—see Section 4.4). This means that a database transaction is required to change the configuration of the I/O mapping. This dialog is defined in Section 4.2.2.

The I/O mapping requires processing in a consistent order to produce deterministic results. The desired order of operation is:

a) Read external inputs.
b) Input mapping—map external inputs to functions.
   1) Input functions are OFF/inactive unless an external input mapped to the function is ON/active.
   2) Input functions are OR'd so that if multiple inputs are mapped to the same function, the function will be ON/active if any of the inputs are ON/active, i.e., if multiple inputs are mapped to the cabinetDoorOpen input, then if any input is active the cabinetDoorOpen input is active.

 © 2023 AASHTO / ITE / NEMA

c) Input logic gate processing.
   1) The outputs of input logic gates are OR'd into the input functions with the external inputs, i.e., if the output of an input logic gate is assigned to cabinetDoorOpen, then if the output of the logic gate is ON/active then the cabinetDoorOpen function will be ON/active regardless of the status of any external inputs mapped to cabinetDoorOpen.
d) Traffic processing.
   1) Phases and overlaps are mapped to channels during traffic processing.
e) Output logic gate processing.
f) Output mapping—map functions to external outputs.
g) Write external outputs.
h) Generate SPaT information from the outputs.

### 4.2.5 Making an I/O Map Active

Making a new I/O map the active map requires a database transaction:

a) Open a database transaction by setting dbCreateTransaction to 'transaction' (see the transaction dialog above).
b) Configure the desired I/O map while the dbCreateTransaction is open, or have the desired I/O map already configured.
c) Set ascIOactiveMap to the index of the desired I/O map.
d) When all requirements for changing the I/O map set by ascIOactivateRequirement are satisfied, set dbCreateTransaction to 'verify.'
e) Get dbCreateTransaction, if equal to 'done' then get dbVerifyStatus.
f) If dbVerifyStatus is 'doneWithNoError' then set dbCreateTransaction to 'normal.'
g) Else examine dbVerifyError to determine the cause of the error and make corrections as necessary.

Once the dbCreateTransaction is successfully completed, the new I/O map will be in effect.

### 4.2.6 Configure Speed Limits for a Node Point [Deprecated]

The standardized dialog for a management station to configure speed limit information shall be as follows:

a) (Precondition) The management station shall be aware of which row in the tables is to be configured.
b) For the specified row in mapSpeedLimitTable, the management station shall SET the following objects to the desired value:
   1) mapSpeedLimitType.x
   2) mapSpeedLimit.x
c) For the specified row in mapNodePointTable, the management station shall SET the following object to the desired value.
   1) mapNodePointSpeedLimits.y.z

   where,
   x = the index of the speed limit (mapSpeedLimitIndex)
   y = the index of the lane identifier (mapLaneNumber)
   z = the index of node point (mapNodePointNumber)

### 4.2.7 Enable Collection of Connected Data [Deprecated]

The standardized dialog for a management station to retrieve connected data shall be as follows:

a) (Precondition) The management station shall be aware of which row in the tables is to be configured.
b) The management station shall GET maxCvDetectionZones.

© 2023 AASHTO / ITE / NEMA Do Not Copy Without Written Permission

c) For the specified row in ascCvDetectorTable, the management station shall SET the following objects to the desired value:
    1) ascCvDetectorOptions.x
    2) ascCvDetectorInput.x
    3) ascCvDetectorAssignment.x
d) If ascCvDetectorInput.x equals 00, then go to Step g.
e) If Bit 2 of ascCvDetectorOptions.x equals 0, the management station shall GET each mapLaneNumber.y defined in ascCvDetectorInput.x. If the device responds with a noSuchName error, then the mapLaneIndex.y may not be valid, and the management station should exit this process.
f) If Bit 2 of ascCvDetectorOptions.x equals 1, the management station shall GET each detectionZoneNodePointIndex.z defined in ascCvDetectorInput.x. If the device responds with a noSuchName error, then the detectionZoneNodePointIndex.z may not be valid, and the management station should exit this process.
g) The management station shall SET cvDetectionEnable to 1.

where,
x = the index of the detection zone (ascCvDetectorNumber)
y = the index of the lane identifier (mapLaneIndex)
z = the index of the detection zone node points (detectionZoneNodePointIndex)

### 4.2.8 Retrieve Connected Device Detector Zone—Geographic [Deprecated]

The standardized dialog for a management station to retrieve the geographic boundaries of a detection zone for a connected device detector shall be as follows:

a) (Precondition) The management station shall be aware of which row in the tables is to be configured.
b) The management station shall GET maxCvDetectionZones.
c) For the specified row in cvDetectorTable, the management station shall GET cvDetectorOptions.x.
d) For the specified row in cvDetectorTable, the management station shall GET cvDetectorInput.x.
e) If Bit 2 of cvDetectorOptions.x is equal to 0, then the management station shall GET
    1) mapNodePointX.y,z
    2) mapNodePointY.y,z
    3) mapNodePointWidth.y,z
    Exit this process.
f) If cvDetectorInput.x is equal to '00', then there is no geographic boundary defined for this detection zone, so the management station should exit this process.
g) Make y = cvDetectorInput.x.
h) The management station shall GET maxDetectionZoneNodePoints
i) In detectionZoneNodePointTable, the management station shall GET the following objects:
    1) detectionZoneNodePointX.w
    2) detectionZoneNodePointY.w
    3) detectionZoneNodePointWidth.w
    4) detectionZoneNodePointZ.w
    5) detectionZoneNodePointHeight.w

where,
w = the index of the detection zone node point (detectionZoneNodePointNumber)
x = the index of the detection zone (cvDetectorNumber)
y = the index of each lane (mapLaneIndex) defined in cvDetectorInput.x
z = the index of the lane path node point (mapNodePointNumber)

Do Not Copy Without Written Permission © 2023 AASHTO / ITE / NEMA

### 4.2.9 Configure Enabled Lanes [Deprecated]

The standardized dialog for a management station to command the enabled lanes list on an ASC shall be as follows:

a) (Precondition) The management station shall ensure that the selected enabled lanes are configured as revocable lanes in the current MAP plan.
b) The management station shall SET spatEnabledLanesCommand.0 to the desired values. This will cause the ASC to perform a consistency check (see Section 4.3.2) on the command.
c) If the response indicates 'noError', the spatEnabledLanesCommand has taken effect and the management station shall GET the spatPortStatus.x to ensure that there are no errors preventing the command from taking effect. The management station may then exit the process.
d) If the response from Step b indicates an error, the command did not take effect. The management station shall GET spatPortStatus.x to determine the type of error.

where,
x = the index of the RSU Port (rsuPortIndex)

### 4.2.10 Provide Detection Reports to an ASC

The standardized dialog for a management station to provide detection reports to an ASC shall be as follows:

a) (Precondition) The management station shall be aware of what detection report (columnar) data is to be exchanged.
b) The management station shall GET activeCvDetectors and detectionReportSequence.
c) Make x = the value of detectionReportSequence.
d) For the specified row in detectionReportTable, the management station shall SET AscCvDetectionReportBlockData in accordance with Section 4.2.3. Only the columnar data requested, as configured in detectionReportCollection, shall be sent in AscCvDetectionReportBlockData. If the columnar data is NOT sent, that columnar data shall be SET to the default value.
e) The ASC shall increment detectionReportSequence.

where,
x = the index of the detection report number (detectionReportSequence)

### 4.2.11 Activating a MAP Plan [Deprecated]

The standardized dialog for a management station to command the CV Roadside Process to activate a MAP plan to be broadcasted shall be as follows:

a) (Precondition) The management station shall ensure that the desired MAP plan is supported by the CV Roadside Process. This may entail downloading the desired MAP plan contents to the CV Roadside Process.
b) The management station shall SET mapActivatePlan.0 to the desired value.

Note: mapActivatePlan.0 is a structure that contains the map plan number (mapPlanIndex) and a CRC of the map plan contents.

c) If the response indicates 'noError,' the MAP plan has been activated, and the management station shall GET mapActivatePlanError.0 to ensure that there are no errors preventing the broadcast of the MAP plan contents. The management station may then exit the process.
d) If the response from Step c indicates an error, the MAP plan was not activated. The management station shall GET mapActivatePlanError.0 to determine the type of error.

© 2023 AASHTO / ITE / NEMA Do Not Copy Without Written Permission

### 4.2.12 Confirm MAP Compatibility

The standardized dialog for an ASC to confirm the SPaT data generated is compatible with the MAP plan broadcasted by the CV Roadside Process is as follows:

a) (Precondition) A management station shall SET the spatPortMapActivationCode for each CV Roadside Process that the ASC is to exchange SPaT data with.
b) (Precondition) If the CV Roadside Process is the SNMP manager for the ASC Process – CV Roadside Process interface, the CV Roadside Process shall SET mapActivatePlan.0 on the ASC.
c) If the ASC is the SNMP manager, the ASC shall GET the mapActivatePlan.0 from the appropriate CV Roadside Process.
d) The ASC shall compare the mapActivatePlan.0 with spatPortMapActivationCode.x. If the values match, then the ASC may exit the process.
e) If the values do not match, spatPortStatus.x shall be mapError(4), and the ASC shall stop providing SPaT data to this CV Roadside Process.
f) If the response from Step c indicates an error, the MAP plan was not activated. The management station shall GET mapActivatePlanError.0 to determine the type of error.

where,
x = the index of the RSU port (rsuPortIndex)

### 4.2.13 Configure Enabled Lanes V2

The standardized dialog for a management station to command the enabled lanes list on an ASC shall be as follows:

a) (Precondition) The management station shall ensure that the selected enabled lanes are configured as revocable lanes in the current MAP plan.
b) The management station shall SET spatEnabledLanesCommand2.0 to the desired values. This will cause the ASC to perform a consistency check (see Section 4.3.2) on the command.
c) If the response indicates 'noError,' the spatEnabledLanesCommand2 has taken effect and the management station shall GET the spatPortStatus.x to ensure that there are no errors preventing the command from taking effect. The management station may then exit the process.
d) If the response from Step b indicates an error, the command did not take effect. The management station shall GET spatPortStatus.x to determine the type of error.

where,
x = the index of the RSU Port (rsuPortIndex)

 © 2023 AASHTO / ITE / NEMA

### 4.3 State-Transition Diagrams

State-transition diagrams are included for those objects that have states or manage states. The state-transition diagrams include state-transition tables (listing of the possible state transitions), legitimate transitions, and any illegitimate transitions.

"State-transition diagrams describe all of the states that an object can have, the events under which an object changes state (transitions), the conditions that must be fulfilled before the transition will occur (guards), and the activities undertaken during the life of an object (actions)" (Reference: State-Transition Diagrams: Testing UML Models, Part 4 by Lee Copeland).

The objects for an ASC device do not have states or manage states, but are classified by data parameter type, as defined in Section 4.3.1. For those objects that are defined as a 'critical' data parameter type, the consistency checks defined in Section 4.3.2 are required to be performed. Section 4.3.3 describes the behavior of the device when a non-sequential time change is detected.

#### 4.3.1 Data Parameter Types

An ASC shall support different types of parameters, which are either:

a) pure status/information parameters (called 'S' objects—See Section 4.4);
b) simple configuration parameters (called 'P' or 'C' objects); or
c) critical configuration parameters that the ASC has to evaluate for consistency before it will use them (called 'P2' objects).

All parameters can be retrieved using simple SNMP GET commands.

Pure status/information ('S' objects) parameters are read-only objects; therefore, an SNMP SET command is not permitted on these types of parameters. These types of parameters may also be contained in block objects (see Section 6) or in dynamic objects (see Annex H.1.1.9).

Simple configuration parameters ('C' or 'P' objects) can be configured using a simple SNMP SET command. However, the use of 'dbCreateTransaction' in NTCIP 1201 v03 Section 2.3.1 shall NOT delay an SNMP SET to 'C' objects, while the use of 'dbCreateTransaction' in NTCIP 1201 v03 Section 2.3.1 for 'P' objects is optional. The device also has to support both the normal SNMP SET and a SET via dbCreateTransaction for 'P' objects. Simple configuration parameters may be contained within block objects (see Section 6) or in dynamic objects (see Annex H.1.1.9).

Critical configuration parameters or any settable objects defined within Block Objects shall not be configured using a simple SNMP SET command, but instead shall be configured using a special data exchange mechanism. This data exchange mechanism is defined above in Section 4.2.3 and in NTCIP 1201 v03 Sections 2.3 and Annex A.1. It is basically a mechanism to open the database in which the new configuration values are to be stored, to download those new configuration values, to close the database, and to instruct the controller to verify the new downloaded values in conjunction with other values stored in the database (this process is referred to as 'dbCreateTransaction' and the verification process is referred to as 'consistency checks'—see Section 4.3.2). Only once this process has been completed successfully will the ASC use the downloaded configuration parameter values.

© 2023 AASHTO / ITE / NEMA Do Not Copy Without Written Permission

### 4.3.2 Consistency Checks

Consistency checks ensure that certain critical objects are checked “in context” and treated as interrelated values rather than separate non-related data items.

When data is downloaded to an ASC operating in the “transaction” mode, as defined by the dbCreateTransaction object defined in NTCIP 1201 v03, consistency checks shall be performed on downloaded data when the “verify” state of the 'dbCreateTransaction' object is commanded. The consistency checks that shall occur and corresponding error messages are described below. Error messages, if any, may be examined by reading the 'dbTransactionError' object defined in NTCIP 1201 v03 once the ASC has entered the “done” mode of the 'dbCreateTransaction' object.

#### 4.3.2.1 Consistency Check Rules

The consistency check rule is stated first, followed by the corresponding error message(s).

- Concurrent Phases, as defined by the phaseConcurrency object, must be in a different ring from phaseNumber (assuming that the phase contained in the phaseNumber object is defined). The error message indicates one or more defined concurrent phases have the same ring assignment as phaseNumber. The value “xx” corresponds to phaseNumber.

  **“PHASE xx CONCURRENCY FAULT”**

  An example: phaseConcurrency.1 (Phase 1 concurrent phases) includes Phase 2 and phaseRing.1 (Phase 1 Ring) equals phaseRing.2 (Phase 2 Ring). An error message of "PHASE 01 CONCURRENCY FAULT" within the 'dbTransactionError' object is generated.

- Concurrent Phases, as defined by the phaseConcurrency object, must be mutually concurrent with phaseNumber (assuming that the phase contained in the phaseNumber object is defined). The error message indicates one or more defined concurrent phases does not include phaseNumber as a concurrent phase. The value "xx" corresponds to phaseNumber.

  **"PHASE xx MUTUAL FAULT"**

  An example: phaseConcurrency.1 (Phase 1 concurrent phases) includes phase 5, and phaseConcurrency.5 (Phase 5 concurrent phases) does not include phase 1. An error message of "PHASE 01 MUTUAL FAULT" is provided.

- Phase Sequences, as defined by the sequenceData object, must include phases only once in a given phase sequence. The error message indicates a phase appears more than once in a phase sequence. The value “xx” corresponds to sequenceNumber for sequenceData.

  **“SEQ xx SAME PHASE FAULT”**

  An example: sequenceData.1.1 (Sequence 01 / Ring 1) is 01-02-03-04-01 (Phase 1 appears twice). An error message of "SEQ 01 SAME PHASE FAULT" is provided.

- Phase Sequences, as defined by the sequenceData object, must include only phases with a ring assignment (phaseRing) equal to sequenceRingNumber. The error message indicates a phase defined by sequenceData does not have a phaseRing equal to sequenceRingNumber. The value “xx” corresponds to sequenceNumber. The value "#" corresponds to sequenceRingNumber.

Do Not Copy Without Written Permission © 2023 AASHTO / ITE / NEMA

**“SEQ xx RING # FAULT”**

An example: sequenceData.1.1 (Sequence 01 / Ring 1) is 01-02-03-04-05 and all phaseRing parameters = 1 except phaseRing.5 = 2. An error message of "SEQ 01 RING 1 FAULT" is provided.

- Phase Sequences, as defined by the sequenceData object, must include all phases with a ring assignment (phaseRing) equal to sequenceRingNumber. The error message indicates a phase has been omitted in the sequenceData for sequenceRingNumber. The value “xx” corresponds to sequenceNumber. The value "#" corresponds to sequenceRingNumber.

  **“SEQ xx RING # PHS OMITTED”**

  A standard dual ring example: sequenceData.1.1 (Sequence 01 / Ring 1) is 01-02-03 (does not include Phase 4). An error message of "SEQ 01 RING 1 PHS OMITTED" is provided.

- Phase Sequences, as defined by the sequenceData object, must be ordered such that all sequenceRingNumber phases within a Concurrency Group can be serviced sequentially without leaving the Concurrency Group of which they are a member. The error message indicates all phases in a Concurrency Group could not be serviced sequentially. The value “xx” corresponds to sequenceNumber.

  **“SEQ xx RING SEQ FAULT”**

  A standard dual ring example: sequenceData.1.1 (Sequence 01 / Ring 1) is 01-03-02-04 and sequenceData.1.2 (Sequence 01 / Ring 2) is 05-06-07-08. An error message of "SEQ 01 RING SEQ FAULT" is provided.

- Phase Sequences, as defined by the sequenceData object; phases must be arranged, so Concurrency Groups of which phases are a member are sequenced in the same order in all rings for a given sequenceNumber. The error message indicates Concurrency Groups are not in the same order for all. The value “xx” corresponds to sequenceNumber.

  **“SEQ xx CG SEQ FAULT”**

  A standard dual ring example: sequenceData.1.1 (Sequence 01 / Ring 1) is 01-02-03-04 and sequenceData.1.2 (Sequence 01 / Ring 2) is 07-08-05-06. An error message of "SEQ 01 RING SEQ FAULT" is provided.

- Phase Sequences, as defined by the sequenceData object; phases must be arranged so that it is possible to service all phases (not skip any phase due to compatibility constraints) in all rings in the order defined.

  **"SEQ xx SEQUENCING FAULT"**

  An example (lead-lag dual ring where phase 1 & 5 cannot operate concurrently): sequenceData.1.1 (Sequence 01 / Ring 1) is 02-01-03-04 and sequenceData.1.2 (Sequence 01 / Ring 2) is 06-05-07-08. An error message of "SEQ 01 SEQUENCING FAULT" is provided.

- Phase Sequences, as defined by the sequenceData object: all sequences must contain entries for all active rings.

© 2023 AASHTO / ITE / NEMA Do Not Copy Without Written Permission

**"SEQ xx RING xx EMPTY"**
**"SEQ xx ALL RINGS EMPTY"**

- The following objects define functionality related to phase assignments. Consistency checks among other things ensure that phases specified by these objects may operate concurrently and are defined only once in each string parameter. Note that if the objects are not defined, operation between different CUs may be inconsistent.

  Phase Startup (phaseStartup)
  Automatic Flash Entry Phases (phaseOptions[1])
  Automatic Flash Exit Phases (phaseOptions[2])
  Overlap Included Phases (overlapIncludedPhases)
  Overlap Modifier Phases (overlapModifierPhases)
  Preempt Track Clear Phases (preemptTrackPhase)
  Preempt Dwell Phases (preemptDwellPhase)
  Preempt Dwell Peds (preemptDwellPed)
  Preempt Exit Phases (preemptExitPhase)
  Preempt Cycling Phases (preemptCyclingPhase)
  Preempt Cycling Ped (preemptCyclingPed)

  When the defined phases CANNOT time concurrently:
  **“START PHASE CG FAULT”**
  **“FLASH ENTRY CG FAULT”**
  **“FLASH EXIT CG FAULT”**
  **“PE TRACK PHASE CG FAULT”**
  **“PE DWELL PHASE CG FAULT”**
  **“PE EXIT PHASE CG FAULT”**

  When the defined phases are in the same ring:
  **“START PHASE RING FAULT”**
  **“FLASH ENTRY RING FAULT”**
  **“FLASH EXIT RING FAULT”**
  **“PE TRACK PHASE RING FAULT”**
  **“PE DWELL PHASE RING FAULT”**
  **“PE EXIT PHASE RING FAULT”**

  When the defined phases are in the string parameter more than once:
  **“OVLP INC PHASE MULTI FAULT”**
  **“OVLP MOD PHASE MULTI FAULT”**
  **“PE TRACK PHASE MULTI FAULT”**
  **“PE DWELL PHASE MULTI FAULT”**
  **“PE DWELL PED MULTI FAULT”**
  **“PE EXIT PHASE MULTI FAULT”**
  **“PE CYCLING PHASE MULTI FAULT”**
  **“PE CYCLING PED MULTI FAULT”**
  **“PHASE xx CONCURRENCY PHASE MULTI FAULT”**

  When a defined phase is disabled:
  **“START PHASE DISABLE FAULT”**
  **“FLASH ENTRY DISABLE FAULT”**
  **“FLASH EXIT DISABLE FAULT”**
  **"PE TRACK PHASE DISABLE FAULT"**
  **“PE DWELL PHASE DISABLE FAULT”**
  **“PE EXIT PHASE DISABLE FAULT”**

Do Not Copy Without Written Permission © 2023 AASHTO / ITE / NEMA

When a peds parent phase is NOT active:
**“PE DWELL PED PARENT FAULT”**
**“PHASE XX CONCURRENCY PHASE DISABLE FAULT”**
**“SEQ XX RING X PHASE DISABLE FAULT”**

When a peds parent phase is NOT active:
**“PE DWELL PED PARENT FAULT”**

When the defined phases contain an invalid phase number value:
**“PHASE xx CONCURRENCY PHASE NUM FAULT”**
**“SEQ xx RING xx PHASE NUM FAULT”**
**“START PHASE xx BAD VALUE FAULT”**

- The following objects define functionality related to overlap assignments. Consistency checks ensure that overlaps specified by these objects may only be active when an included phase (overlapIncludedPhases) is active.
Preempt Track Clear Overlaps (preemptTrackOverlap)
Preempt Dwell Overlaps (preemptDwellOverlap)
Preempt Cycling Overlap (preemptCyclingOverlap)

  When an included phase IS NOT defined to be active:
  **“PE TRACK OVERLAP FAULT”**
  **“PE DWELL OVERLAP FAULT”**

  When the defined overlaps are in the string parameter more than once:
  **“PE TRACK OVLP MULTI FAULT”**
  **“PE DWELL OVLP MULTI FAULT”**
  **“PE CYCLING OVLP MULTI FAULT”**

- The following objects define functionality related to coordination patterns. Consistency checks ensure that patterns specified by these objects are active.

  Pattern Cycle Length (patternCycleTime)
  Pattern Offset Time (patternOffsetTime)
  Pattern Split Phase (splitPhase)
  Pattern Split Time (splitTime)
  Pattern Split Coordinated Phase (splitCoordPhase)

  When the sum of phase minimum times exceeds the cycle length:
  **“PATTERN xx PHASE MINS EXCEED CYCLE”**

  When the sum of the split times exceeds the cycle length:
  **“PATTERN xx SPLITS EXCEED CYCLE”**

  When the pattern offset exceeds the cycle length:
  **“PATTERN xx OFFSET EXCEEDS CYCLE”**

  When the splits of a ring have no indicated coordinated phase:
  **“PATTERN xx RING xx HAS NO SYNC PHASE”**

  When the minimum time of a phase exceeds its split time:
  **“PATTERN xx PHASE xx MIN EXCEEDS SPLIT”**

- When no consistency faults are detected in the data when leaving “transaction” mode, the following shall be written to the dbVerifyError object:

© 2023 AASHTO / ITE / NEMA Do Not Copy Without Written Permission

**“NO VERIFICATION ERROR”**

Note that the order of the checks is not defined. Therefore, for a given set of 'bad' data, the Error Message between different ASCs may be inconsistent.

- The following objects define functionality related to I/O mapping. Consistency checks ensure that the input and output mappings contain valid functions and indexes:

  I/O Map input / output index (ascIOinputMapIOindex, ascIOoutputMapIOindex)
  I/O Map input / output function (ascIOinputMapFunction, ascIOoutputMapFunction)
  I/O Map input / output function index (ascIOinputMapFuncIndex, ascIOoutputMapFuncIndex)

  **“FIO INPUT MAP ROW xx INVALID FCTN”**
  **“FIO INPUT MAP ROW xx INVALID INDX”**
  **“FIO OUTPUT MAP ROW xx INVALID FCTN”**
  **“FIO OUTPUT MAP ROW xx INVALID INDX”**
  **“TS1 INPUT MAP ROW xx INVALID FCTN”**
  **“TS1 INPUT MAP ROW xx INVALID INDX”**
  **“TS1 OUTPUT MAP ROW xx INVALID FCTN”**
  **“TS1 OUTPUT MAP ROW xx INVALID INDX”**
  **“BIU xx INPUT MAP ROW xx INVALID FCTN”**
  **“BIU xx INPUT MAP ROW xx INVALID INDX”**
  **“BIU xx OUTPUT MAP ROW xx INVALID FCTN”**
  **“BIU xx OUTPUT MAP ROW xx INVALID INDX”**
  **“SIU xx INPUT MAP ROW xx INVALID FCTN”**
  **“SIU xx INPUT MAP ROW xx INVALID INDX”**
  **“SIU xx OUTPUT MAP ROW xx INVALID FCTN”**
  **“SIU xx OUTPUT MAP ROW xx INVALID INDX”**
  **“AUX INPUT MAP INVALID FCTN”**
  **“AUX INPUT MAP INVALID INDX”**

- The enabled lanes included in a spatEnabledLanesCommand2 must match one of the entries in the enabledLaneConcurrency object. The enabledLaneConcurrency object defines which revocable lanes can be enabled concurrently (simultaneously). If ALL the enabled lanes in the spatEnabledLanesCommand2 does not match one of the entries, the command is rejected and an error message is created. The value "xx" defines the lane(s) (in the spatEnabledLanesCommand2) requested to be enabled not defined as a concurrent lane in one of the enabledLaneConcurrency objects.

  **"ENABLED LANE xx CONCURRENCY FAULT"**

  An example: The only value in the enabledLaneConcurrency entry is 05 06 (indicating lanes 5 and 6 can be concurrent). If the value of spatEnabledLanesCommand2 is SET to 05, an error message of ENABLED LANE 06 CONCURRENCY FAULT is provided.

### 4.3.3 Non-Sequential Time Change

The standardized dialog for a device to log a non-sequential change to the ASC clock time shall be as follows:

a) (Precondition) The device shall be aware of which row in the eventLogTable is the new event to be recorded.
b) The device receives a non-sequential change to the unit (device) time.
c) The device shall update the device globalTime.
d) The device shall add an event to the event log with the following data, where eventLogTime is equal to the device globalTime:

 © 2023 AASHTO / ITE / NEMA

1) eventLogID.x.y
2) eventLogTime.x.y
3) eventLogValue.x.y
4) eventLogTimeMilliseconds.x.y (if supported)

e) The device shall add an event to the event log with the value of unitTimeNonSequentialSource, unitTimeNonSequentialChange, and unitTimeNonSequentialDelta.

Where:
x = event log class
y = event log number

### 4.4 Class Diagrams

Not applicable.

### 4.5 Object Types

The following symbols are used to indicate type within this standard:

| Symbol | Type |
|---|---|
| C | Control Object—use of 'dbCreateTransaction' in NTCIP 1201 Clause 2.3.1 shall NOT delay a SET to this object. |
| P | Parameter Object—use of 'dbCreateTransaction' in NTCIP 1201 Clause 2.3.1 to SET this object is optional. The device must support both the normal SNMP SET and a SET via dbCreateTransaction using the 4.2.2 dialog. |
| P2 | Parameter Object—use of 'dbCreateTransaction' in NTCIP 1201 Clause 2.3.1 to SET this object is mandatory. NOTE—The device must NOT allow a normal SNMP SET and it must require use of the 4.2.2 dialog. |
| S | Status / Information Object—this object is read-only; therefore, a SET is not permitted. |

© 2023 AASHTO / ITE / NEMA Do Not Copy Without Written Permission

# Section 5
# Management Information Base (MIB) [Normative]

Section 5 defines those objects that are specifically used by Actuated Signal Controllers (ASC). The objects are defined using the OBJECT-TYPE macro as specified in RFC 1212 and NTCIP 8004 v02. The text provided from Section 5 through the end of Section 6 (except the section headings) constitutes the standard NTCIP1202-v03 MIB.

All of the objects defined in this NTCIP 1202 v03 reside under the “asc” node of the global naming tree. To aid in object management, the “asc” node has been subdivided into logical categories, each defined by a node under the “asc” node. The individual objects are then located under the appropriate node.

Conformance requirements for any object are determined by the use of the Requirements Traceability Matrix (RTM) in Annex A. To support any defined Requirement, an implementation shall support all objects to which the Requirement traces in the RTM. The value of the STATUS field for every object in the MIB is "mandatory," and indicates that it is mandatory if any associated Requirement is selected.

For all bitmapped objects, if a bit is zero (0), then the referenced function is disabled or not supported, and if a bit is one (1), then the referenced function is enabled or supported.

A computer readable format of this information, called a Management Information Base, is available from NEMA (ntcip@nema.org). The MIB has been verified using SMICng Version 2.2.07 (Book).

Previous versions of NTCIP 1202 v03 defined data elements that have been replaced to resolve ambiguities; however, central systems may need to interoperate with older equipment and support such data elements. Annex D documents the reason that the ASC WG decided to deprecate various objects.

## 5.0 MIB Comment Header

```
--*****************************************************************
-- Filename:      1202v0335e.MIB
-- Date:          September 18, 2023
-- Description:   NTCIP 1202 v03, Amendment B
--                This MIB defines the Actuated Signal Controller
--                Objects
--*****************************************************************
```

## 5.1 MIB Header

```
NTCIP1202-v03 DEFINITIONS ::= BEGIN

-- the following OBJECT IDENTIFIERS are used in the ASC MIB:
IMPORTS
    IpAddress, Counter, null
      FROM RFC1155-SMI
    OBJECT-TYPE
      FROM RFC-1212
    DisplayString, ifIndex
      FROM RFC1213-MIB
    OwnerString, OerString, devices
      FROM NTCIP8004v02;
```

 © 2023 AASHTO / ITE / NEMA

```
asc OBJECT IDENTIFIER ::= { devices 1 }
```

### 5.2 Phase Parameters

```
phase OBJECT IDENTIFIER
::= { asc 1 }

-- This node shall contain objects that configure, monitor or
-- control phase functions for this device.
```

#### 5.2.1 Maximum Phases

```
maxPhases   OBJECT-TYPE
      SYNTAX INTEGER (2..255)
      ACCESS read-only
      STATUS mandatory
      DESCRIPTION  "<Definition> The Maximum Number of Phases this Controller
            Unit supports. This object indicates the maximum rows which shall
            appear in the phaseTable object.
      <Object Identifier> 1.3.6.1.4.1.1206.4.2.1.1.1
      <Object Type> S
      <Unit> phase"
::= { phase 1 }
```

#### 5.2.2 Phase Table

```
phaseTable   OBJECT-TYPE
      SYNTAX SEQUENCE OF PhaseEntry
      ACCESS not-accessible
      STATUS mandatory
      DESCRIPTION "<Definition> A table containing Controller Unit phase
            parameters. The number of rows in this table is equal to the
            maxPhases object.
      <TableType> static
      <Object Identifier> 1.3.6.1.4.1.1206.4.2.1.1.2"
::= { phase 2 }

phaseEntry   OBJECT-TYPE
      SYNTAX PhaseEntry
      ACCESS not-accessible
      STATUS mandatory
      DESCRIPTION "<Definition> Parameters for a specific Controller Unit
            phase.
      <Object Identifier> 1.3.6.1.4.1.1206.4.2.1.1.2.1
      <Unit> "
      INDEX { phaseNumber }
::= { phaseTable 1 }

PhaseEntry ::= SEQUENCE {
      phaseNumber             INTEGER,
      phaseWalk               INTEGER,
      phasePedestrianClear    INTEGER,
      phaseMinimumGreen       INTEGER,
      phasePassage            INTEGER,
      phaseMaximum1           INTEGER,
      phaseMaximum2           INTEGER,
```

© 2023 AASHTO / ITE / NEMA 

```
      phaseYellowChange       INTEGER,
      phaseRedClear           INTEGER,
      phaseRedRevert          INTEGER,
      phaseAddedInitial       INTEGER,
      phaseMaximumInitial     INTEGER,
      phaseTimeBeforeReduction      INTEGER,
      phaseCarsBeforeReduction      INTEGER,
      phaseTimeToReduce       INTEGER,
      phaseReduceBy           INTEGER,
      phaseMinimumGap         INTEGER,
      phaseDynamicMaxLimit    INTEGER,
      phaseDynamicMaxStep     INTEGER,
      phaseStartup            INTEGER,
      phaseOptions            INTEGER,
      phaseRing               INTEGER,
      phaseConcurrency        OCTET STRING,
      phaseMaximum3           INTEGER,
      phaseYellowandRedChangeTimeBeforeEndPedClear    INTEGER,
      phasePedWalkService     INTEGER,
      phaseDontWalkRevert     INTEGER,
      phasePedAlternateClearance    INTEGER,
      phasePedAlternateWalk         INTEGER,
      phasePedAdvanceWalkTime INTEGER,
      phasePedDelayTime       INTEGER,
      phaseAdvWarnGrnStartTime      INTEGER,
      phaseAdvWarnRedStartTime      INTEGER,
      phaseAltMinTimeTransition     INTEGER }
```

#### 5.2.2.1 Phase Number

```
phaseNumber   OBJECT-TYPE
      SYNTAX INTEGER (1..255)
      ACCESS read-only
      STATUS mandatory
      DESCRIPTION "<Definition> The phase number for objects in this row.
            This value shall not exceed the maxPhases object value.
      <Object Identifier> 1.3.6.1.4.1.1206.4.2.1.1.2.1.1
      <Object Type> S
      <Unit> phase"
::= { phaseEntry 1 }
```

#### 5.2.2.2 Phase Walk Parameter

```
phaseWalk   OBJECT-TYPE
      SYNTAX INTEGER (0..255)
      ACCESS read-write
      STATUS mandatory
      DESCRIPTION "<Definition> Phase Walk Parameter in seconds. This shall
            control the amount of time the Walk indication shall be
            displayed. This parameter shall be used regardless whether the
            pedestrian indication associated with this phase is for a ped-
            only phase or for a pedestrian indication that runs parallel to a
            vehicle phase.
      <Object Identifier> 1.3.6.1.4.1.1206.4.2.1.1.2.1.2
      <Object Type> P
      <Unit> second"
      REFERENCE "NEMA TS 2 Clause 3.5.3.1 and 3.5.3.2.2.a"
```

Copy Per MIB Distribution Permission © 2023 AASHTO / ITE / NEMA

```
::= { phaseEntry 2 }
```

#### 5.2.2.3 Phase Pedestrian Clear Parameter

```
phasePedestrianClear   OBJECT-TYPE
      SYNTAX INTEGER (0..255)
      ACCESS read-write
      STATUS mandatory
      DESCRIPTION "<Definition> Phase Pedestrian Clear Parameter in seconds.
            This shall control the duration of the Pedestrian Clearance
            output (if present) and the flashing period of the Don't Walk
            output.
            This parameter shall be used regardless whether the pedestrian
            indication associated with this phase is for a ped-only phase or
            for a pedestrian indication that runs parallel to a vehicle
            phase.
      <Object Identifier> 1.3.6.1.4.1.1206.4.2.1.1.2.1.3
      <Object Type> P
      <Unit> second"
      REFERENCE "NEMA TS 2 Clause 3.5.3.1 and 3.5.3.2.2.b"
::= { phaseEntry 3 }
```

#### 5.2.2.4 Phase Minimum Green Parameter

```
phaseMinimumGreen   OBJECT-TYPE
      SYNTAX INTEGER (0..255)
      ACCESS read-write
      STATUS mandatory
      DESCRIPTION "<Definition> Phase Minimum Green Parameter in seconds
            (NEMA TS 2 range: 1-255 sec). The first timed portion of the
            Green interval which may be set in consideration of the storage
            of vehicles between the zone of detection for the approach
            vehicle detector(s) and the stop line.
      <Object Identifier> 1.3.6.1.4.1.1206.4.2.1.1.2.1.4
      <Object Type> P
      <Unit> second"
      REFERENCE "NEMA TS 2 Clause 3.5.3.1 and 3.5.3.2.1.a.(1)"
::= { phaseEntry 4 }
```

#### 5.2.2.5 Phase Passage Parameter

```
phasePassage   OBJECT-TYPE
      SYNTAX INTEGER (0..255)
      ACCESS read-write
      STATUS mandatory
      DESCRIPTION "<Definition> Phase Passage Parameter in tenth seconds (0-
            25.5 sec). Passage Time, Vehicle Interval, Preset Gap, Vehicle
            Extension: the extensible portion of the Green shall be a
            function of vehicle actuations that occur during the Green
            interval. The phase shall remain in the extensible portion of the
            Green interval as long as the passage timer is not timed out. The
            timing of this portion of the green interval shall be reset with
            each subsequent vehicle actuation and shall not commence to time
            again until the vehicle actuation is removed or the maximum green
            timer has expired.
      <Object Identifier> 1.3.6.1.4.1.1206.4.2.1.1.2.1.5
```

© 2023 AASHTO / ITE / NEMA Copy Per MIB Distribution Permission

```
      <Object Type> P
      <Unit> tenth second"
      REFERENCE "NEMA TS 2 Clause 3.5.3.1 and 3.5.3.2.1.a.(2)"
::= { phaseEntry 5 }
```

#### 5.2.2.6 Phase Maximum Green 1 Parameter

```
phaseMaximum1   OBJECT-TYPE
      SYNTAX INTEGER (0..255)
      ACCESS read-write
      STATUS mandatory
      DESCRIPTION "<Definition> Phase Maximum 1 Parameter in seconds (NEMA TS
            2 range: 1-255 sec). This time setting shall determine the
            maximum length of time this phase may be held in Green in the
            presence of a serviceable conflicting call. In the absence of a
            serviceable conflicting call the Maximum Green timer shall be
            held reset unless Max Vehicle Recall is enabled for this phase.
            This is the default maximum value to use. It may be overridden
            via an external input, coordMaximumMode or other method.
      <Object Identifier> 1.3.6.1.4.1.1206.4.2.1.1.2.1.6
      <Object Type> P
      <Unit> second"
      REFERENCE "NEMA TS 2 Clause 3.5.3.1, 3.5.3.2.1.a.(3) and 3.5.3.5"
::= { phaseEntry 6 }
```

#### 5.2.2.7 Phase Maximum Green 2 Parameter

```
phaseMaximum2   OBJECT-TYPE
      SYNTAX INTEGER (0..255)
      ACCESS read-write
      STATUS mandatory
      DESCRIPTION "<Definition> Phase Maximum 2 Parameter in seconds (NEMA TS
            2 range: 1-255 sec). This time setting shall determine the
            maximum length of time this phase may be held in Green in the
            presence of a serviceable conflicting call. In the absence of a
            serviceable conflicting call the Maximum Green timer shall be
            held reset unless Max Vehicle Recall is enabled for this phase.
            This may be implemented as the max green timer via an external
            input, coordMaximumMode or other method.
      <Object Identifier> 1.3.6.1.4.1.1206.4.2.1.1.2.1.7
      <Object Type> P
      <Unit> second"
      REFERENCE "NEMA TS 2 Clause 3.5.3.1, 3.5.3.2.1.a.(3), 3.5.3.5
       and 3.5.4.1 (7)"
::= { phaseEntry 7 }
```

#### 5.2.2.8 Phase Yellow Change Parameter

```
phaseYellowChange   OBJECT-TYPE
      SYNTAX INTEGER (0..255)
      ACCESS read-write
      STATUS mandatory
      DESCRIPTION "<Definition> Phase Yellow Change Parameter in tenth
            seconds (NEMA TS 2 range: 3-25.5 sec). Following the Green
            interval of each phase the CU shall provide a Yellow Change
```

 © 2023 AASHTO / ITE / NEMA

```
            interval which is timed according to the Yellow Change parameter
            for that phase.
      <Object Identifier> 1.3.6.1.4.1.1206.4.2.1.1.2.1.8
      <Object Type> P
      <Unit> tenth second"
      REFERENCE "NEMA TS 2 Clause 3.5.3.1 and 3.5.3.2.5.a"
::= { phaseEntry 8 }
```

#### 5.2.2.9 Phase Red Clear Parameter

```
phaseRedClear   OBJECT-TYPE
      SYNTAX INTEGER (0..255)
      ACCESS read-write
      STATUS mandatory
      DESCRIPTION "<Definition> Phase Red Clearance Parameter in tenth
            seconds (0-25.5 sec).Following the Yellow Change interval for
            each phase, the CU shall provide a Red Clearance interval which
            is timed according to the Red Clearance parameter for that phase.
      <Object Identifier> 1.3.6.1.4.1.1206.4.2.1.1.2.1.9
      <Object Type> P
      <Unit> tenth second"
      REFERENCE "NEMA TS 2 Clause 3.5.3.1 and 3.5.3.2.5.b"
::= { phaseEntry 9 }
```

#### 5.2.2.10 Phase Red Revert

```
phaseRedRevert OBJECT-TYPE
      SYNTAX INTEGER (0..255)
      ACCESS read-write
      STATUS mandatory
      DESCRIPTION "<Definition> Red revert time parameter in tenth seconds. A
            minimum Red indication to be timed following the Yellow Change
            interval and prior to the next display of Green on the same
            signal output driver group.
            The unitRedRevert parameter shall act as a minimum red revert
            time for all signal displays. The phaseRedRevert parameter may
            increase the red revert time for a specific phase. If the
            phaseRedRevert parameter is less than the unitRedRevert the
            unitRedRevert time shall be used.
      <Object Identifier> 1.3.6.1.4.1.1206.4.2.1.1.2.1.10
      <Object Type> P
      <Unit> tenth second"
::= { phaseEntry 10 }
```

#### 5.2.2.11 Phase Added Initial Parameter

```
phaseAddedInitial   OBJECT-TYPE
      SYNTAX INTEGER (0..255)
      ACCESS read-write
      STATUS mandatory
      DESCRIPTION "<Definition> Phase Added Initial Parameter in tenths of
            seconds (0-25.5 sec). Added Initial parameter (Seconds /
            Actuation) shall determine the time by which the variable initial
            time period will be increased from zero with each vehicle
            actuation received during the associated phase Yellow and Red
            intervals.
```

© 2023 AASHTO / ITE / NEMA Copy Per MIB Distribution Permission

```
      <Object Identifier> 1.3.6.1.4.1.1206.4.2.1.1.2.1.11
      <Object Type> P
      <Unit> tenth second"
      REFERENCE "NEMA TS 2 Clause 3.5.3.1 and 3.5.3.2.1.b.(1).(b)"
::= { phaseEntry 11 }
```

#### 5.2.2.12 Phase Maximum Initial Parameter

```
phaseMaximumInitial   OBJECT-TYPE
      SYNTAX INTEGER (0..255)
      ACCESS read-write
      STATUS mandatory
      DESCRIPTION "<Definition> Phase Maximum Initial Parameter in seconds
            (0-255 sec). The maximum value of the variable initial timing
            period. Variable Initial timing shall equal the lesser of [added
            initial (seconds / actuation) * number of actuations] or [ Max
            Initial ]. The variable initial time shall not be less than
            Minimum Green.
      <Object Identifier> 1.3.6.1.4.1.1206.4.2.1.1.2.1.12
      <Object Type> P
      <Unit> second"
      REFERENCE "NEMA TS 2 Clause 3.5.3.2.1.b.(1).(c)"
::= { phaseEntry 12 }
```

#### 5.2.2.13 Phase Time Before Reduction Parameter

```
phaseTimeBeforeReduction   OBJECT-TYPE
      SYNTAX INTEGER (0..255)
      ACCESS read-write
      STATUS mandatory
      DESCRIPTION "<Definition> Phase Time Before Reduction (TBR) Parameter
            in seconds (0-255 sec). The Time Before Reduction period shall
            begin when the phase is Green and there is a serviceable
            conflicting call. If the serviceable conflicting call is removed
            before completion of this time (or time to reduce), the timer
            shall reset. Upon completion of the TBR period or the
            CarsBeforeReduction (CBR) parameter is satisfied, whichever
            occurs first, the linear reduction of the allowable gap from the
            Passage Time shall begin.
      <Object Identifier> 1.3.6.1.4.1.1206.4.2.1.1.2.1.13
      <Object Type> P
      <Unit> second"
      REFERENCE "NEMA TS 2 Clause 3.5.3.1 and 3.5.3.2.1.b.(2)"
::= { phaseEntry 13 }
```

#### 5.2.2.14 Phase Cars Before Reduction Parameter

```
phaseCarsBeforeReduction   OBJECT-TYPE
      SYNTAX INTEGER (0..255)
      ACCESS read-write
      STATUS mandatory
      DESCRIPTION "<Definition> Phase Cars Before Reduction (CBR) Parameter
            (0-255 vehicles). When the phase is Green and the sum of the cars
            waiting (vehicle actuations during Yellow & Red intervals) on
            serviceable conflicting phases equals or exceeds the CBR
            parameter or the Time Before Reduction (TBR) parameter is
```

 © 2023 AASHTO / ITE / NEMA

```
            satisfied, whichever occurs first, the linear reduction of the
            allowable gap from the Passage Time shall begin.
      <Object Identifier> 1.3.6.1.4.1.1206.4.2.1.1.2.1.14
      <Object Type> P
      <Unit> vehicle"
::= { phaseEntry 14 }
```

#### 5.2.2.15 Phase Time To Reduce Parameter

```
phaseTimeToReduce   OBJECT-TYPE
      SYNTAX INTEGER (0..255)
      ACCESS read-write
      STATUS mandatory
      DESCRIPTION "<Definition> Phase Time To Reduce Parameter in seconds (0-
            255 sec). This parameter shall control the rate of reduction of
            the allowable gap between the Passage Time and Minimum Gap
            setting.
      <Object Identifier> 1.3.6.1.4.1.1206.4.2.1.1.2.1.15
      <Object Type> P
      <Unit> second"
      REFERENCE "NEMA TS 2 Clause 3.5.3.1 and 3.5.3.2.1.b.(2)"
::= { phaseEntry 15 }
```

#### 5.2.2.16 Phase Reduce By

```
phaseReduceBy   OBJECT-TYPE
      SYNTAX INTEGER (0..255)
      ACCESS read-write
      STATUS mandatory
      DESCRIPTION "<Definition> This object may be used for volume density
            gap reduction as an alternate to the linear reduction defined by
            NEMA TS 1 and TS 2. It contains the tenths of seconds to reduce
            the gap by (0.0 - 25.5 seconds). The frequency of reduction shall
            produce the Minimum Gap after a time equal to the
            'phaseTimeToReduce' object.
      <Object Identifier> 1.3.6.1.4.1.1206.4.2.1.1.2.1.16
      <Object Type> P
      <Unit> tenth second"
::= { phaseEntry 16 }
```

#### 5.2.2.17 Phase Minimum Gap Parameter

```
phaseMinimumGap   OBJECT-TYPE
      SYNTAX INTEGER (0..255)
      ACCESS read-write
      STATUS mandatory
      DESCRIPTION "<Definition> Phase Minimum Gap Parameter in tenth seconds
            (0-25.5 sec). The reduction of the allowable gap shall continue
            until the gap reaches a value equal to or less than the minimum
            gap as set on the Minimum Gap control after which the allowable
            gap shall remain fixed at the values set on the Minimum Gap
            control.
      <Object Identifier> 1.3.6.1.4.1.1206.4.2.1.1.2.1.17
      <Object Type> P
      <Unit> tenth second"
      REFERENCE "NEMA TS 2 Clause 3.5.3.1 and 3.5.3.2.1.b.(2)"
```

© 2023 AASHTO / ITE / NEMA Copy Per MIB Distribution Permission

```
::= { phaseEntry 17 }
```

#### 5.2.2.18 Phase Dynamic Max Limit

```
phaseDynamicMaxLimit   OBJECT-TYPE
      SYNTAX INTEGER (0..255)
      ACCESS read-write
      STATUS mandatory
      DESCRIPTION "<Definition> This object shall determine either the upper
            or lower limit of the running max in seconds (0-255 sec) during
            dynamic max operation. The normal maximum (i.e. Max1, Max2, etc.)
            shall determine the other limit as follows:
            When dynamicMaxLimit is larger than the normal maximum, it shall
            become the upper limit.

            When dynamicMaxLimit is smaller than the normal maximum, it shall
            become the lower limit.

            Setting dynamicMaxLimit greater than zero enables dynamic max
            operation with the normal maximum used as the initial maximum
            setting. See dynamicMaxStep for details on dynamic max operation.

            Maximum recall or a failed detector that is assigned to the
            associated phase shall disable dynamic max operation for the
            phase.
      <Object Identifier> 1.3.6.1.4.1.1206.4.2.1.1.2.1.18
      <Object Type> P
      <Unit> second"
::= { phaseEntry 18 }
```

#### 5.2.2.19 Phase Dynamic Max Step

```
phaseDynamicMaxStep   OBJECT-TYPE
      SYNTAX INTEGER (0..255)
      ACCESS read-write
      STATUS mandatory
      DESCRIPTION "<Definition> This object shall determine the automatic
            adjustment to the running max in tenth seconds (0-25.5)

            When a phase maxes out twice in a row, and on each successive max
            out thereafter, one dynamic max step value shall be added to the
            running max until such addition would mean the running max was
            greater than the larger of normal max or dynamic max limit.

            When a phase gaps out twice in a row, and on each successive gap
            out thereafter, one dynamic max step value shall be subtracted
            from the running max until such subtraction would mean the
            running max was less than the smaller of the normal max or the
            dynamic max limit.

            If a phase gaps out in one cycle and maxes out in the next cycle,
            or vice versa, the running max will not change.
      <Object Identifier> 1.3.6.1.4.1.1206.4.2.1.1.2.1.19
      <Object Type> P
      <Unit> tenth second"
::= { phaseEntry 19 }
```

Copy Per MIB Distribution Permission © 2023 AASHTO / ITE / NEMA

#### 5.2.2.20 Phase Startup

```
phaseStartup   OBJECT-TYPE
      SYNTAX INTEGER { other (1),
            phaseNotOn (2),
            greenWalk (3),
            greenNoWalk (4),
            yellowChange (5),
            redClear (6)}
      ACCESS read-write
      STATUS mandatory
      DESCRIPTION "<Definition> The Phase Startup parameter is an enumerated
            integer which selects the startup state for each phase after
            restoration of a defined power interruption or activation of the
            external start input. The following entries are defined:
            other: this phase is not enabled (phaseOptions bit 0=0 or
                  phaseRing=0) or initializes in a state not defined by this
                  standard.
            phaseNotOn: this phase initializes in a Red state (the phase is
                  not active and no intervals are timing).
            greenWalk: this phase initializes at the beginning of the minimum
                  green and walk timing intervals.
            greenNoWalk: this phase initializes at the beginning of the
                  minimum green timing interval.
            yellowChange: this phase initializes at the beginning of the
                  Yellow Change interval.
            redClear: this phase initializes at the beginning of the Red
                  Clearance interval.
      <Object Identifier> 1.3.6.1.4.1.1206.4.2.1.1.2.1.20
      <Object Type> P2"
      REFERENCE "NEMA TS 2 Clause 3.5.5.1 and 3.5.5.12"
::= { phaseEntry 20 }
```

#### 5.2.2.21 Phase Options

```
phaseOptions   OBJECT-TYPE
      SYNTAX INTEGER (0..65535)
      ACCESS read-write
      STATUS mandatory
      DESCRIPTION "<Definition> Optional phase functions ( 0 = False/
       Disabled, 1 = True/Enabled)
            Bit 15: AddedInitialCalculation - If set (1) the CU shall compare
                  counts from all associated AddedInitial detectors and use
                  the largest count value for the calculations. If clear (0)
                  the CU shall sum all associated AddedInitial detector
                  counts and use this sum for the calculations. The ability
                  to modify the setting of this bit is optional.
            Bit 14: Conditional Service Enable - in multi-ring configurations
                  when set to 1 causes a gapped/maxed phase to conditionally
                  service a preceding actuated vehicle phase when sufficient
                  time remains before max time out of the phase(s) not
                  prepared to terminate. Support is optional.
                  REFERENCE  NEMA TS 2 Clause 3.5.3.9
            Bit 13: Actuated Rest In Walk - when set to 1 causes an actuated
                  phase to rest in Walk when there is no serviceable
                  conflicting call at the end of Walk Timing.
```

© 2023 AASHTO / ITE / NEMA Copy Per MIB Distribution Permission

Bit 12: Guaranteed Passage - when set to 1 enables an actuated phase operating in volume density mode (using gap reduction) to retain the right of way for the unexpired portion of the Passage time following the decision to terminate the green due to a reduced gap. Support is optional

Bit 11: Simultaneous Gap Disable - in multi-ring configurations when set to 1 disables a gapped out phase from reverting to the extensible portion. Support is optional
REFERENCE NEMA TS 2 Clause 3.5.5.3

Bit 10: Dual Entry Phase - in multi-ring configurations when set to 1 causes the phase to become active upon entry into a concurrency group (crossing a barrier) when no calls exist in its ring within its concurrency group.
REFERENCE NEMA TS 2 Clause 3.5.5.3

Bit 9: Soft Vehicle Recall - when set to 1 causes a call on a phase when all conflicting phases are in green dwell or red dwell and there are no serviceable conflicting calls. Support is optional.

Bit 8: Ped. Recall - when set to 1 causes a recurring pedestrian demand which shall function in the same manner as an external pedestrian call except that it shall not recycle the pedestrian service until a conflicting phase is serviced.
REFERENCE NEMA TS 2 Clause 3.5.3.7

Bit 7: Max Vehicle Recall - when set to 1 causes a call on a phase such that the timing of the Green interval for that phase shall be extended to Maximum Green time.
REFERENCE NEMA TS 2 Clause 3.5.3.5

Bit 6: Min. Vehicle Recall - when set to 1 causes recurring demand for vehicle service on the phase when that phase is not in its Green interval.
REFERENCE NEMA TS 2 Clause 3.5.3.6

Bit 5: Non Lock Detector Memory - when set to 0 will cause the call to be locked at the beginning of the yellow interval. When set to 1 call locking will depend on the detectorOptions object.
REFERENCE NEMA TS 2 Clause 3.5.3.4

Bit 4: Non-Actuated 2 - when set to 1 causes a phase to respond to the Call To Non-Actuated 2 input (if present) or other method. Support is optional
REFERENCE NEMA TS 2 Clause 3.5.5.5.8

Bit 3: Non-Actuated 1 - when set to 1 causes a phase to respond to the Call To Non-Actuated 1 input (if present) or other method. Support is optional
REFERENCE NEMA TS 2 Clause 3.5.5.5.8

Bit 2: Automatic Flash Exit Phase - The CU shall move immediately to the beginning of the phase(s) programmed as Exit Phase(s) when Automatic Flash terminates. Support is optional
REFERENCE NEMA TS 2 Clause 3.9.1.2.1

Bit 1: Automatic Flash Entry Phase - When Automatic Flash is called, the CU shall service the Entry Phase(s), clear to an All Red, then initiate flashing operation. Support is optional.
REFERENCE NEMA TS 2 Clause 3.9.1.2.1

Copy Per MIB Distribution Permission © 2023 AASHTO / ITE / NEMA

```
            Bit 0: Enabled Phase - provide a means to define whether this
                  phase is used in the current configuration. A disabled
                  phase shall not provide any outputs nor respond to any
                  phase inputs. The object phaseRing = 0 has the same effect.
      <Object Identifier> 1.3.6.1.4.1.1206.4.2.1.1.2.1.21
      <Object Type> P2"
::= { phaseEntry 21 }
```

#### 5.2.2.22 Phase Ring Parameter

```
phaseRing   OBJECT-TYPE
      SYNTAX INTEGER (0..255)
      ACCESS read-write
      STATUS mandatory
      DESCRIPTION "<Definition> Phase ring number (1..maxRings) that
            identified the ring which contains the associated  phase. This
            value must not exceed the maxRings object value. If the ring
            number is zero, the phase is disabled (phaseOptions Bit 0 = 0 has
            the same effect).
      <Object Identifier> 1.3.6.1.4.1.1206.4.2.1.1.2.1.22
      <Object Type> P2
      <Unit> ring"
::= { phaseEntry 22 }
```

#### 5.2.2.23 Phase Concurrency

```
phaseConcurrency   OBJECT-TYPE
      SYNTAX OCTET STRING
      ACCESS read-write
      STATUS mandatory
      DESCRIPTION "<Definition> Each octet contains a phase number (binary
            value) that may run concurrently with the associated phase.
            Phases that are contained in the same ring may NOT run
            concurrently.
      <Object Identifier> 1.3.6.1.4.1.1206.4.2.1.1.2.1.23
      <Object Type> P2"
::= { phaseEntry 23 }
```

#### 5.2.2.24 Phase Maximum Green 3 Parameter

```
phaseMaximum3  OBJECT-TYPE
      SYNTAX INTEGER (0..6000)
      ACCESS read-write
      STATUS mandatory
      DESCRIPTION "<Definition> Phase Maximum 3 Parameter in seconds. This
            time setting shall determine the maximum length of time this
            phase may be held in Green in the presence of a serviceable
            conflicting call. In the absence of a serviceable conflicting
            call the Maximum Green timer shall be held reset unless Max
            Vehicle Recall is enabled for this phase. This may be implemented
            as the max green timer via an external input, coordMaximumMode or
            other method.
      <Object Identifier> 1.3.6.1.4.1.1206.4.2.1.1.2.1.24
      <Object Type> P
      <Unit> second"
::= { phaseEntry 24 }
```

© 2023 AASHTO / ITE / NEMA Copy Per MIB Distribution Permission

#### 5.2.2.25 Phase Yellow and Red Change Time Before End of Ped Clearance Parameter

```
phaseYellowandRedChangeTimeBeforeEndPedClear   OBJECT-TYPE
      SYNTAX INTEGER (0..255)
      ACCESS read-write
      STATUS mandatory
      DESCRIPTION "<Definition> The amount of time that the pedestrian
            clearance may extend into the vehicle clearance time (yellow and
            red) for a phase. This parameter is expressed in 0.1 second
            increments ranging from 0.0 to 25.5 seconds.
      <Object Identifier> 1.3.6.1.4.1.1206.4.2.1.1.2.1.25
      <Object Type> P
      <Unit> tenth second"
::= { phaseEntry 25 }
```

#### 5.2.2.26 Pedestrian Phase Walk Recycle Parameter

```
phasePedWalkService   OBJECT-TYPE
      SYNTAX INTEGER (1..255)
      ACCESS read-write
      STATUS mandatory
      DESCRIPTION "<Definition> This parameter indicates whether and how many
            times this phase is allowed to recycle the pedestrian movement
            during a cycle. This parameter is used for ped-only, signalized
            intersections (mostly mid-block) that are within a coordinated
            roadway. If set to '1', no recycle is allowed and the pedestrian
            movement can be shown only up to once. If set to '2', the
            pedestrian movement can be shown up to twice during a cycle, etc.
      <Object Identifier> 1.3.6.1.4.1.1206.4.2.1.1.2.1.26
      <Object Type> P"
::= { phaseEntry 26 }
```

#### 5.2.2.27 Pedestrian Phase Dont Walk Revert Parameter

```
phaseDontWalkRevert   OBJECT-TYPE
      SYNTAX INTEGER (0..255)
      ACCESS read-write
      STATUS mandatory
      DESCRIPTION "<Definition> Dont Walk revert time parameter in tenth
            seconds. A minimum Dont Walk indication to be timed following the
            pedestrian clearance interval prior to the next Walk indication
            on the same signal output driver group.
      <Object Identifier> 1.3.6.1.4.1.1206.4.2.1.1.2.1.27
      <Object Type> P
      <Unit> tenth second"
::= { phaseEntry 27 }
```

#### 5.2.2.28 Phase Alternate Pedestrian Clearance Time Parameter

```
phasePedAlternateClearance   OBJECT-TYPE
      SYNTAX INTEGER (0..255)
      ACCESS read-write
      STATUS mandatory
```

Copy Per MIB Distribution Permission © 2023 AASHTO / ITE / NEMA

```
      DESCRIPTION "<Definition> An alternate (replacement) time, in seconds,
            for the duration of the pedestrian clearance output (if present)
            and the flashing period of the dont walk output.
            This parameter may be used for a parallel pedestrian indication
            in conjunction with a vehicle phase or with a ped-only phase.
      <Object Identifier> 1.3.6.1.4.1.1206.4.2.1.1.2.1.28
      <Object Type> P
      <Unit> second"
::= { phaseEntry 28 }
```

#### 5.2.2.29 Phase Alternate Pedestrian Walk Time Parameter

```
phasePedAlternateWalk   OBJECT-TYPE
      SYNTAX INTEGER (0..255)
      ACCESS read-write
      STATUS mandatory
      DESCRIPTION "<Definition> An alternate (replacement) time, in seconds,
            for a pedestrian walk. This shall control the amount of time the
            Walk indication shall be displayed.
            This parameter may be used for a parallel pedestrian indication
            in conjunction with a vehicle phase or with a ped-only phase.
      <Object Identifier> 1.3.6.1.4.1.1206.4.2.1.1.2.1.29
      <Object Type> P
      <Unit> second"
::= { phaseEntry 29 }
```

#### 5.2.2.30 Phase Pedestrian Advance Walk Time Parameter

```
phasePedAdvanceWalkTime   OBJECT-TYPE
      SYNTAX INTEGER (0..255)
      ACCESS read-write
      STATUS mandatory
      DESCRIPTION "<Definition> The amount of time, in tenths of a second
            from 0 to 25.5 seconds, that the vehicle phase's parallel
            pedestrian Walk indication starts before the start of the green
            indication of the vehicle phase. A value of 12.7 seconds
            indicates the pedestrian WALK indication starts 12.7 seconds
            before the GREEN indication of the vehicle phase. The actual
            offset used between the start of the pedestrian Walk indication
            and the start of the green indication of the vehicle phase is the
            sum of this object value plus the value in the phasePedDelayTime.
      <Object Identifier> 1.3.6.1.4.1.1206.4.2.1.1.2.1.30
      <Object Type> P
      <Unit> tenth second"
      DEFVAL { 0 }
::= { phaseEntry 30 }
```

#### 5.2.2.31 Phase Pedestrian Delay Walk Time Parameter

```
phasePedDelayTime   OBJECT-TYPE
      SYNTAX INTEGER (0..255)
      ACCESS read-write
      STATUS mandatory
      DESCRIPTION "<Definition> The amount of time, in tenths of a second
            from 0 to 25.5 seconds, that the vehicle phase's parallel
            pedestrian Walk indication starts after the start of the green
```

© 2023 AASHTO / ITE / NEMA Copy Per MIB Distribution Permission

```
            indication of the vehicle phase. A value of 12.7 indicates the
            pedestrian WALK indication starts 12.7 seconds after the GREEN
            indication of the vehicle phase. The actual offset used between
            the start of the pedestrian Walk indication and the start of the
            green indication of the vehicle phase is the sum of this object
            value plus the value in the phasePedAdvanceWalkTime.
      <Object Identifier> 1.3.6.1.4.1.1206.4.2.1.1.2.1.31
      <Object Type> P
      <Unit> tenth second"
      DEFVAL { 0 }
::= { phaseEntry 31 }
```

#### 5.2.2.32 Phase Advanced Green Indication Start Time Parameter

```
phaseAdvWarnGrnStartTime   OBJECT-TYPE
      SYNTAX INTEGER (0..128)
      ACCESS read-write
      STATUS mandatory
      DESCRIPTION "<Definition> The amount of time, in tenths of a second for
            a period of 0.0 to 12.8 seconds, that an advanced warning signal
            indication is displayed before the start of phase Green. The
            warning signal is placed upstream of the phase's approach and
            indicates that the phase's Green indication is about to start or
            has started.
            The value of this object should not exceed the total amount of
            clearance time of the phase(s) that is being terminated prior to
            the start of this phase.
            Note: The Advanced Warning Green terminates at the end of the
            green.
      <Object Identifier> 1.3.6.1.4.1.1206.4.2.1.1.2.1.32
      <Object Type> P
      <Unit> tenth second"
::= { phaseEntry 32 }
```

#### 5.2.2.33 Phase Advanced Red Indication Start Time Parameter

```
phaseAdvWarnRedStartTime   OBJECT-TYPE
      SYNTAX INTEGER (0..255)
      ACCESS read-write
      STATUS mandatory
      DESCRIPTION "<Definition> The amount of time, in tenths of a second for
            a range of 0.0 to 25.5 seconds, prior to the start of the phase's
            RED indication that an advanced warning signal, placed upstream
            of the phase's approach, turns on.
            Note: The Advanced Warning Red terminates at the end of Red.
      <Object Identifier> 1.3.6.1.4.1.1206.4.2.1.1.2.1.33
      <Object Type> P
      <Unit> tenth second"
::= { phaseEntry 33 }
```

#### 5.2.2.34 Phase Alternate Minimum Green Time During Transitions

```
phaseAltMinTimeTransition   OBJECT-TYPE
      SYNTAX INTEGER (0..255)
      ACCESS read-write
      STATUS mandatory
```

 © 2023 AASHTO / ITE / NEMA

```
      DESCRIPTION "<Definition> This object indicates the alternate minimum
            green time that is used during transitions, in seconds from 1 to
            255 seconds. This object can be applied during transitions or
            signal priority. A value of 0 indicates that this object is not
            used during transitions. The alternate minimum green cannot be
            less than phaseMinimumGreen for this phase.
      <Object Identifier> 1.3.6.1.4.1.1206.4.2.1.1.2.1.34
      <Object Type> P
      <Unit> second"
      DEFVAL { 0 }
::= { phaseEntry 34 }
```

### 5.2.3 Maximum Phase Groups

```
maxPhaseGroups   OBJECT-TYPE
      SYNTAX INTEGER (1..255)
      ACCESS read-only
      STATUS mandatory
      DESCRIPTION "<Definition> The Maximum Number of Phase Groups (8 Phases
            per group) this Controller Unit supports. This value is equal to
            TRUNCATE [(maxPhases + 7) / 8]. This object indicates the maximum
            rows which shall appear in the phaseStatusGroupTable and
            phaseControlGroupTable.
      <Object Identifier> 1.3.6.1.4.1.1206.4.2.1.1.3
      <Object Type> S
      <Unit> group"
::= { phase 3 }
```

### 5.2.4 Phase Status Group Table

```
phaseStatusGroupTable   OBJECT-TYPE
      SYNTAX SEQUENCE OF PhaseStatusGroupEntry
      ACCESS not-accessible
      STATUS mandatory
      DESCRIPTION "<Definition> A table containing Controller  Unit Phase
            Output (Red, Yellow, & Green) and Call (vehicle & pedestrian)
            status in groups of eight Phases. The number of rows in this
            table is equal to the maxPhaseGroups object.
      <TableType> static
      <Object Identifier> 1.3.6.1.4.1.1206.4.2.1.1.4"
::= { phase 4 }

phaseStatusGroupEntry   OBJECT-TYPE
      SYNTAX PhaseStatusGroupEntry
      ACCESS not-accessible
      STATUS mandatory
      DESCRIPTION "<Definition> Red, Yellow, & Green Output Status and
            Vehicle and Pedestrian Call for eight Controller Unit Phases.
      <Object Identifier> 1.3.6.1.4.1.1206.4.2.1.1.4.1"
      INDEX   { phaseStatusGroupNumber }
::= { phaseStatusGroupTable 1 }

PhaseStatusGroupEntry ::= SEQUENCE {
      phaseStatusGroupNumber        INTEGER,
      phaseStatusGroupReds          INTEGER,
      phaseStatusGroupYellows       INTEGER,
      phaseStatusGroupGreens        INTEGER,
```

© 2023 AASHTO / ITE / NEMA Copy Per MIB Distribution Permission

```
      phaseStatusGroupDontWalks     INTEGER,
      phaseStatusGroupPedClears     INTEGER,
      phaseStatusGroupWalks         INTEGER,
      phaseStatusGroupVehCalls      INTEGER,
      phaseStatusGroupPedCalls      INTEGER,
      phaseStatusGroupPhaseOns      INTEGER,
      phaseStatusGroupPhaseNexts    INTEGER }
```

#### 5.2.4.1 Phase Status Group Number

```
phaseStatusGroupNumber   OBJECT-TYPE
      SYNTAX INTEGER (1..255)
      ACCESS read-only
      STATUS mandatory
      DESCRIPTION "<Definition> The Phase Status Group number for objects in
            this row. This value shall not exceed the maxPhaseGroups object
            value.
      <Object Identifier> 1.3.6.1.4.1.1206.4.2.1.1.4.1.1
      <Object Type> S
      <Unit> group"
::= { phaseStatusGroupEntry 1 }
```

#### 5.2.4.2 Phase Status Group Reds

```
phaseStatusGroupReds   OBJECT-TYPE
      SYNTAX INTEGER (0..255)
      ACCESS read-only
      STATUS mandatory
      DESCRIPTION "<Definition> Phase Red Output Status Mask, when a bit = 1,
            the Phase Red is currently active. When a bit = 0, the Phase Red
            is NOT currently active.
            Bit 7: Phase # = (phaseStatusGroupNumber * 8)
            Bit 6: Phase # = (phaseStatusGroupNumber * 8) - 1
            Bit 5: Phase # = (phaseStatusGroupNumber * 8) - 2
            Bit 4: Phase # = (phaseStatusGroupNumber * 8) - 3
            Bit 3: Phase # = (phaseStatusGroupNumber * 8) - 4
            Bit 2: Phase # = (phaseStatusGroupNumber * 8) - 5
            Bit 1: Phase # = (phaseStatusGroupNumber * 8) - 6
            Bit 0: Phase # = (phaseStatusGroupNumber * 8) - 7
      <Object Identifier> 1.3.6.1.4.1.1206.4.2.1.1.4.1.2
      <Object Type> S"
::= { phaseStatusGroupEntry 2 }
```

#### 5.2.4.3 Phase Status Group Yellows

```
phaseStatusGroupYellows   OBJECT-TYPE
      SYNTAX INTEGER (0..255)
      ACCESS read-only
      STATUS mandatory
      DESCRIPTION "<Definition> Phase Yellow Output Status Mask, when a bit =
            1, the Phase Yellow is currently active. When a  bit = 0, the
            Phase Yellow is NOT currently active.
            Bit 7: Phase # = (phaseStatusGroupNumber * 8)
            Bit 6: Phase # = (phaseStatusGroupNumber * 8) - 1
            Bit 5: Phase # = (phaseStatusGroupNumber * 8) - 2
            Bit 4: Phase # = (phaseStatusGroupNumber * 8) - 3
```

 © 2023 AASHTO / ITE / NEMA

```
            Bit 3: Phase # = (phaseStatusGroupNumber * 8) - 4
            Bit 2: Phase # = (phaseStatusGroupNumber * 8) - 5
            Bit 1: Phase # = (phaseStatusGroupNumber * 8) - 6
            Bit 0: Phase # = (phaseStatusGroupNumber * 8) - 7
      <Object Identifier> 1.3.6.1.4.1.1206.4.2.1.1.4.1.3
      <Object Type> S"
::= { phaseStatusGroupEntry 3 }
```

#### 5.2.4.4 Phase Status Group Greens

```
phaseStatusGroupGreens   OBJECT-TYPE
      SYNTAX INTEGER (0..255)
      ACCESS read-only
      STATUS mandatory
      DESCRIPTION "<Definition> Phase Green Output Status Mask, when a bit =
            1, the Phase Green is currently active. When a bit = 0, the Phase
            Green is NOT currently active.
            Bit 7: Phase # = (phaseStatusGroupNumber * 8)
            Bit 6: Phase # = (phaseStatusGroupNumber * 8) - 1
            Bit 5: Phase # = (phaseStatusGroupNumber * 8) - 2
            Bit 4: Phase # = (phaseStatusGroupNumber * 8) - 3
            Bit 3: Phase # = (phaseStatusGroupNumber * 8) - 4
            Bit 2: Phase # = (phaseStatusGroupNumber * 8) - 5
            Bit 1: Phase # = (phaseStatusGroupNumber * 8) - 6
            Bit 0: Phase # = (phaseStatusGroupNumber * 8) - 7
      <Object Identifier> 1.3.6.1.4.1.1206.4.2.1.1.4.1.4
      <Object Type> S"
::= { phaseStatusGroupEntry 4 }
```

#### 5.2.4.5 Phase Status Group Dont Walks

```
phaseStatusGroupDontWalks   OBJECT-TYPE
      SYNTAX INTEGER (0..255)
      ACCESS read-only
      STATUS mandatory
      DESCRIPTION "<Definition> Phase Dont Walk Output Status Mask, when a
            bit = 1, the Phase Dont Walk is currently active. When a bit = 0,
            the Phase Dont Walk is NOT currently active.
            Bit 7: Phase # = (phaseStatusGroupNumber * 8)
            Bit 6: Phase # = (phaseStatusGroupNumber * 8) - 1
            Bit 5: Phase # = (phaseStatusGroupNumber * 8) - 2
            Bit 4: Phase # = (phaseStatusGroupNumber * 8) - 3
            Bit 3: Phase # = (phaseStatusGroupNumber * 8) - 4
            Bit 2: Phase # = (phaseStatusGroupNumber * 8) - 5
            Bit 1: Phase # = (phaseStatusGroupNumber * 8) - 6
            Bit 0: Phase # = (phaseStatusGroupNumber * 8) - 7
      <Object Identifier> 1.3.6.1.4.1.1206.4.2.1.1.4.1.5
      <Object Type> S"
::= { phaseStatusGroupEntry 5 }
```

#### 5.2.4.6 Phase Status Group Pedestrian Clears

```
phaseStatusGroupPedClears   OBJECT-TYPE
      SYNTAX INTEGER (0..255)
      ACCESS read-only
      STATUS mandatory
```

© 2023 AASHTO / ITE / NEMA Copy Per MIB Distribution Permission

```
      DESCRIPTION "<Definition> Phase Ped Clear Output Status Mask, when a
            bit = 1, the Phase Ped Clear is currently active. When a bit = 0,
            the Phase Ped Clear is NOT currently active.
            Bit 7: Phase # = (phaseStatusGroupNumber * 8)
            Bit 6: Phase # = (phaseStatusGroupNumber * 8) - 1
            Bit 5: Phase # = (phaseStatusGroupNumber * 8) - 2
            Bit 4: Phase # = (phaseStatusGroupNumber * 8) - 3
            Bit 3: Phase # = (phaseStatusGroupNumber * 8) - 4
            Bit 2: Phase # = (phaseStatusGroupNumber * 8) - 5
            Bit 1: Phase # = (phaseStatusGroupNumber * 8) - 6
            Bit 0: Phase # = (phaseStatusGroupNumber * 8) - 7
      <Object Identifier> 1.3.6.1.4.1.1206.4.2.1.1.4.1.6
      <Object Type> S"
::= { phaseStatusGroupEntry 6 }
```

#### 5.2.4.7 Phase Status Group Walks

```
phaseStatusGroupWalks   OBJECT-TYPE
      SYNTAX INTEGER (0..255)
      ACCESS read-only
      STATUS mandatory
      DESCRIPTION "<Definition> Phase Walk Output Status Mask, when a bit =
            1, the Phase Walk is currently active. When a bit = 0, the Phase
            Walk is NOT currently active.
            Bit 7: Phase # = (phaseStatusGroupNumber * 8)
            Bit 6: Phase # = (phaseStatusGroupNumber * 8) - 1
            Bit 5: Phase # = (phaseStatusGroupNumber * 8) - 2
            Bit 4: Phase # = (phaseStatusGroupNumber * 8) - 3
            Bit 3: Phase # = (phaseStatusGroupNumber * 8) - 4
            Bit 2: Phase # = (phaseStatusGroupNumber * 8) - 5
            Bit 1: Phase # = (phaseStatusGroupNumber * 8) - 6
            Bit 0: Phase # = (phaseStatusGroupNumber * 8) - 7
      <Object Identifier> 1.3.6.1.4.1.1206.4.2.1.1.4.1.7
      <Object Type> S"
::= { phaseStatusGroupEntry 7 }
```

#### 5.2.4.8 Phase Status Group Vehicle Calls

```
phaseStatusGroupVehCalls   OBJECT-TYPE
      SYNTAX INTEGER (0..255)
      ACCESS read-only
      STATUS mandatory
      DESCRIPTION "<Definition> Phase Vehicle Call Status Mask, when a bit =
            1, the Phase vehicle currently has a call for service. When a bit
            = 0, the Phase vehicle currently does NOT have a call for
            service.
            Bit 7: Phase # = (phaseStatusGroupNumber * 8)
            Bit 6: Phase # = (phaseStatusGroupNumber * 8) - 1
            Bit 5: Phase # = (phaseStatusGroupNumber * 8) - 2
            Bit 4: Phase # = (phaseStatusGroupNumber * 8) - 3
            Bit 3: Phase # = (phaseStatusGroupNumber * 8) - 4
            Bit 2: Phase # = (phaseStatusGroupNumber * 8) - 5
            Bit 1: Phase # = (phaseStatusGroupNumber * 8) - 6
            Bit 0: Phase # = (phaseStatusGroupNumber * 8) - 7
      <Object Identifier> 1.3.6.1.4.1.1206.4.2.1.1.4.1.8
      <Object Type> S"
::= { phaseStatusGroupEntry 8 }
```

 © 2023 AASHTO / ITE / NEMA

#### 5.2.4.9 Phase Status Group Pedestrian Calls

```
phaseStatusGroupPedCalls   OBJECT-TYPE
      SYNTAX INTEGER (0..255)
      ACCESS read-only
      STATUS mandatory
      DESCRIPTION "<Definition> Phase Pedestrian Call Status Mask, when a bit
            = 1, the  Phase pedestrian currently has a call for service. When
            a bit = 0, the Phase pedestrian currently does NOT have a call
            for service.
            Bit 7: Phase # = (phaseStatusGroupNumber * 8)
            Bit 6: Phase # = (phaseStatusGroupNumber * 8) - 1
            Bit 5: Phase # = (phaseStatusGroupNumber * 8) - 2
            Bit 4: Phase # = (phaseStatusGroupNumber * 8) - 3
            Bit 3: Phase # = (phaseStatusGroupNumber * 8) - 4
            Bit 2: Phase # = (phaseStatusGroupNumber * 8) - 5
            Bit 1: Phase # = (phaseStatusGroupNumber * 8) - 6
            Bit 0: Phase # = (phaseStatusGroupNumber * 8) - 7
      <Object Identifier> 1.3.6.1.4.1.1206.4.2.1.1.4.1.9
      <Object Type> S"
::= { phaseStatusGroupEntry 9 }
```

#### 5.2.4.10 Phase Status Group Phase Ons

```
phaseStatusGroupPhaseOns   OBJECT-TYPE
      SYNTAX INTEGER (0..255)
      ACCESS read-only
      STATUS mandatory
      DESCRIPTION "<Definition> Phase On Status Mask, when a bit = 1, the
            Phase is currently active. When a bit = 0, the Phase currently is
            NOT active. The phase is ON during the Green, Yellow, & Red
            Clearance intervals of that phase. It shall be permissible for
            this STATUS to be True (bit=1) during the Red Dwell state.
            Bit 7: Phase # = (phaseStatusGroupNumber * 8)
            Bit 6: Phase # = (phaseStatusGroupNumber * 8) - 1
            Bit 5: Phase # = (phaseStatusGroupNumber * 8) - 2
            Bit 4: Phase # = (phaseStatusGroupNumber * 8) - 3
            Bit 3: Phase # = (phaseStatusGroupNumber * 8) - 4
            Bit 2: Phase # = (phaseStatusGroupNumber * 8) - 5
            Bit 1: Phase # = (phaseStatusGroupNumber * 8) - 6
            Bit 0: Phase # = (phaseStatusGroupNumber * 8) - 7
      <Object Identifier> 1.3.6.1.4.1.1206.4.2.1.1.4.1.10
      <Object Type> S"
::= { phaseStatusGroupEntry 10 }
```

#### 5.2.4.11 Phase Status Group Phase Nexts

```
phaseStatusGroupPhaseNexts   OBJECT-TYPE
      SYNTAX INTEGER (0..255)
      ACCESS read-only
      STATUS mandatory
      DESCRIPTION "<Definition> Phase Next Status Mask, when a bit = 1, the
            Phase currently is committed to be NEXT in sequence & remains
            present until the phase becomes active (On/Timing). When a bit =
            0, the Phase currently is NOT committed to be NEXT in sequence.
```

© 2023 AASHTO / ITE / NEMA 

```
            The phase next to be serviced shall be determined at the end of
            the green interval of the terminating phase; except that if the
            decision cannot be made at the end of the Green interval, it
            shall not be made until after the end of all Vehicle Change &
            Clearance intervals.
            Bit 7: Phase # = (phaseStatusGroupNumber * 8)
            Bit 6: Phase # = (phaseStatusGroupNumber * 8) - 1
            Bit 5: Phase # = (phaseStatusGroupNumber * 8) - 2
            Bit 4: Phase # = (phaseStatusGroupNumber * 8) - 3
            Bit 3: Phase # = (phaseStatusGroupNumber * 8) - 4
            Bit 2: Phase # = (phaseStatusGroupNumber * 8) - 5
            Bit 1: Phase # = (phaseStatusGroupNumber * 8) - 6
            Bit 0: Phase # = (phaseStatusGroupNumber * 8) - 7
      <Object Identifier> 1.3.6.1.4.1.1206.4.2.1.1.4.1.11
      <Object Type> S"
::= { phaseStatusGroupEntry 11 }
```

### 5.2.5 Phase Control Table

```
phaseControlGroupTable   OBJECT-TYPE
      SYNTAX SEQUENCE OF PhaseControlGroupEntry
      ACCESS not-accessible
      STATUS mandatory
      DESCRIPTION "<Definition> A table containing Controller Unit Phase
            Control in groups of eight phases. The number of rows in this
            table is equal to the maxPhaseGroups object.
      <TableType> static
      <Object Identifier> 1.3.6.1.4.1.1206.4.2.1.1.5
      <Unit> group"
::= { phase 5 }

phaseControlGroupEntry   OBJECT-TYPE
      SYNTAX PhaseControlGroupEntry
      ACCESS not-accessible
      STATUS mandatory
      DESCRIPTION "<Definition> Phase Control for eight Controller Unit
            phases.
      <Object Identifier> 1.3.6.1.4.1.1206.4.2.1.1.5.1"
      INDEX   { phaseControlGroupNumber }
::= { phaseControlGroupTable 1 }

PhaseControlGroupEntry ::= SEQUENCE {
      phaseControlGroupNumber       INTEGER,
      phaseControlGroupPhaseOmit    INTEGER,
      phaseControlGroupPedOmit      INTEGER,
      phaseControlGroupHold         INTEGER,
      phaseControlGroupForceOff     INTEGER,
      phaseControlGroupVehCall      INTEGER,
      phaseControlGroupPedCall      INTEGER }
```

#### 5.2.5.1 Phase Control Group Number

```
phaseControlGroupNumber   OBJECT-TYPE
      SYNTAX INTEGER (1..255)
      ACCESS read-only
      STATUS mandatory
```

 © 2023 AASHTO / ITE / NEMA

```
      DESCRIPTION "<Definition> The Phase Control Group number for objects in
            this row. This value shall not exceed the maxPhaseGroups object
            value.
      <Object Identifier> 1.3.6.1.4.1.1206.4.2.1.1.5.1.1
      <Object Type> S
      <Unit> group"
::= { phaseControlGroupEntry 1 }
```

#### 5.2.5.2 Phase Omit Control

```
phaseControlGroupPhaseOmit   OBJECT-TYPE
      SYNTAX INTEGER (0..255)
      ACCESS read-write
      STATUS mandatory
      DESCRIPTION "<Definition> This object is used to allow a remote entity
            to omit phases from being serviced in the device. When a bit = 1,
            the device shall activate the System Phase Omit control for that
            phase. When a bit = 0, the device shall not activate the System
            Phase Omit control for that phase.
            Bit 7: Phase # = (phaseControlGroupNumber * 8)
            Bit 6: Phase # = (phaseControlGroupNumber * 8) - 1
            Bit 5: Phase # = (phaseControlGroupNumber * 8) - 2
            Bit 4: Phase # = (phaseControlGroupNumber * 8) - 3
            Bit 3: Phase # = (phaseControlGroupNumber * 8) - 4
            Bit 2: Phase # = (phaseControlGroupNumber * 8) - 5
            Bit 1: Phase # = (phaseControlGroupNumber * 8) - 6
            Bit 0: Phase # = (phaseControlGroupNumber * 8) - 7
            The device shall reset this object to ZERO when in BACKUP Mode. A
            write to this object shall reset the Backup timer to ZERO (see
            unitBackupTime).
      <Object Identifier> 1.3.6.1.4.1.1206.4.2.1.1.5.1.2
      <Object Type> C"
      REFERENCE "NEMA TS 2 Clause 3.5.3.11.2"
::= { phaseControlGroupEntry 2 }
```

#### 5.2.5.3 Pedestrian Omit Control

```
phaseControlGroupPedOmit   OBJECT-TYPE
      SYNTAX INTEGER (0..255)
      ACCESS read-write
      STATUS mandatory
      DESCRIPTION "<Definition> This object is used to allow a remote entity
            to omit peds from being serviced in the device. When a bit = 1,
            the device shall activate the System Ped Omit control for that
            phase. When a bit = 0, the device shall not activate the System
            Ped Omit control for that phase.
            Bit 7: Phase # = (phaseControlGroupNumber * 8)
            Bit 6: Phase # = (phaseControlGroupNumber * 8) - 1
            Bit 5: Phase # = (phaseControlGroupNumber * 8) - 2
            Bit 4: Phase # = (phaseControlGroupNumber * 8) - 3
            Bit 3: Phase # = (phaseControlGroupNumber * 8) - 4
            Bit 2: Phase # = (phaseControlGroupNumber * 8) - 5
            Bit 1: Phase # = (phaseControlGroupNumber * 8) - 6
            Bit 0: Phase # = (phaseControlGroupNumber * 8) - 7
            The device shall reset this object to ZERO when in BACKUP Mode. A
            write to this object shall reset the Backup timer to ZERO (see
            unitBackupTime).
```

© 2023 AASHTO / ITE / NEMA Copy Per MIB Distribution Permission

```
      <Object Identifier> 1.3.6.1.4.1.1206.4.2.1.1.5.1.3
      <Object Type> C"
      REFERENCE "NEMA TS 2 Clause 3.5.3.11.3"
::= { phaseControlGroupEntry 3 }
```

#### 5.2.5.4 Phase Hold Control

```
phaseControlGroupHold   OBJECT-TYPE
      SYNTAX INTEGER (0..255)
      ACCESS read-write
      STATUS mandatory
      DESCRIPTION "<Definition> This object is used to allow a remote entity
            to hold phases in the device. When a bit = 1, the device shall
            activate the System Phase Hold control for that phase. When a bit
            = 0, the device shall not activate the System Phase Hold control
            for that phase.
            Bit 7: Phase # = (phaseControlGroupNumber * 8)
            Bit 6: Phase # = (phaseControlGroupNumber * 8) - 1
            Bit 5: Phase # = (phaseControlGroupNumber * 8) - 2
            Bit 4: Phase # = (phaseControlGroupNumber * 8) - 3
            Bit 3: Phase # = (phaseControlGroupNumber * 8) - 4
            Bit 2: Phase # = (phaseControlGroupNumber * 8) - 5
            Bit 1: Phase # = (phaseControlGroupNumber * 8) - 6
            Bit 0: Phase # = (phaseControlGroupNumber * 8) - 7
            The device shall reset this object to ZERO when in BACKUP Mode. A
            write to this object shall reset the Backup timer to ZERO (see
            unitBackupTime).
      <Object Identifier> 1.3.6.1.4.1.1206.4.2.1.1.5.1.4
      <Object Type> C"
      REFERENCE "NEMA TS 2 Clause 3.5.3.11.1"
::= { phaseControlGroupEntry 4 }
```

#### 5.2.5.5 Phase Force Off Control

```
phaseControlGroupForceOff   OBJECT-TYPE
      SYNTAX INTEGER (0..255)
      ACCESS read-write
      STATUS mandatory
      DESCRIPTION "<Definition> This object is used to apply force offs on a
            per phase basis. When a bit = 1, the device shall activate the
            System Phase Force Off control for that phase. When a bit = 0,
            the device shall not activate the System Phase Force Off control
            for that phase. When the phase green terminates, the associated
            bit shall be reset to 0.
            Bit 7: Phase # = (phaseControlGroupNumber * 8)
            Bit 6: Phase # = (phaseControlGroupNumber * 8) - 1
            Bit 5: Phase # = (phaseControlGroupNumber * 8) - 2
            Bit 4: Phase # = (phaseControlGroupNumber * 8) - 3
            Bit 3: Phase # = (phaseControlGroupNumber * 8) - 4
            Bit 2: Phase # = (phaseControlGroupNumber * 8) - 5
            Bit 1: Phase # = (phaseControlGroupNumber * 8) - 6
            Bit 0: Phase # = (phaseControlGroupNumber * 8) - 7
            The device shall reset this object to ZERO when in BACKUP Mode. A
            write to this object shall reset the Backup timer to ZERO (see
            unitBackupTime).
      <Object Identifier> 1.3.6.1.4.1.1206.4.2.1.1.5.1.5
      <Object Type> C"
```

 © 2023 AASHTO / ITE / NEMA

```
::= { phaseControlGroupEntry 5 }
```

#### 5.2.5.6 Vehicle Call Control

```
phaseControlGroupVehCall   OBJECT-TYPE
      SYNTAX INTEGER (0..255)
      ACCESS read-write
      STATUS mandatory
      DESCRIPTION "<Definition> This object is used to allow a remote entity
            to place calls for vehicle service in the device. When a bit = 1,
            the device shall place a call for vehicle service on that phase.
            When a bit = 0, the device shall not place a call for vehicle
            service on that phase.
            Bit 7: Phase # = (phaseControlGroupNumber * 8)
            Bit 6: Phase # = (phaseControlGroupNumber * 8) - 1
            Bit 5: Phase # = (phaseControlGroupNumber * 8) - 2
            Bit 4: Phase # = (phaseControlGroupNumber * 8) - 3
            Bit 3: Phase # = (phaseControlGroupNumber * 8) - 4
            Bit 2: Phase # = (phaseControlGroupNumber * 8) - 5
            Bit 1: Phase # = (phaseControlGroupNumber * 8) - 6
            Bit 0: Phase # = (phaseControlGroupNumber * 8) - 7
            The device shall reset this object to ZERO when in BACKUP Mode. A
            write to this object shall reset the Backup timer to ZERO (see
            unitBackupTime).
      <Object Identifier> 1.3.6.1.4.1.1206.4.2.1.1.5.1.6
      <Object Type> C"
::= { phaseControlGroupEntry 6 }
```

#### 5.2.5.7 Pedestrian Call Control

```
phaseControlGroupPedCall   OBJECT-TYPE
      SYNTAX INTEGER (0..255)
      ACCESS read-write
      STATUS mandatory
      DESCRIPTION "<Definition> This object is used to allow a remote entity
            to place calls for ped service in the device. When a bit = 1, the
            device shall place a call for ped service on that phase. When a
            bit = 0, the device shall not place a call for ped service on
            that phase.
            Bit 7: Phase # = (phaseControlGroupNumber * 8)
            Bit 6: Phase # = (phaseControlGroupNumber * 8) - 1
            Bit 5: Phase # = (phaseControlGroupNumber * 8) - 2
            Bit 4: Phase # = (phaseControlGroupNumber * 8) - 3
            Bit 3: Phase # = (phaseControlGroupNumber * 8) - 4
            Bit 2: Phase # = (phaseControlGroupNumber * 8) - 5
            Bit 1: Phase # = (phaseControlGroupNumber * 8) - 6
            Bit 0: Phase # = (phaseControlGroupNumber * 8) - 7
            The device shall reset this object to ZERO when in BACKUP Mode. A
            write to this object shall reset the Backup timer to ZERO (see
            unitBackupTime).
      <Object Identifier> 1.3.6.1.4.1.1206.4.2.1.1.5.1.7
      <Object Type> C"
::= { phaseControlGroupEntry 7 }
```

© 2023 AASHTO / ITE / NEMA Copy Per MIB Distribution Permission

### 5.3 Detector Parameters

```
detector OBJECT IDENTIFIER
::= { asc 2 }

-- This defines a node for supporting detector objects.
```

#### 5.3.1 Maximum Vehicle Detectors

```
maxVehicleDetectors   OBJECT-TYPE
      SYNTAX INTEGER (1..255)
      ACCESS read-only
      STATUS mandatory
      DESCRIPTION "<Definition> The Maximum Number of Vehicle Detectors this
            Controller Unit supports. This object indicates the maximum rows
            which shall appear in the vehicleDetectorTable object.
      <Object Identifier> 1.3.6.1.4.1.1206.4.2.1.2.1
      <Object Type> S
      <Unit> detector"
::= { detector 1 }
```

#### 5.3.2 Vehicle Detector Parameter Table

```
vehicleDetectorTable   OBJECT-TYPE
      SYNTAX SEQUENCE OF VehicleDetectorEntry
      ACCESS not-accessible
      STATUS mandatory
      DESCRIPTION "<Definition> A table containing Controller Unit vehicle
            detector parameters. The number of rows in this table is equal to
            the maxVehicleDetectors object.
      <TableType> static
      <Object Identifier> 1.3.6.1.4.1.1206.4.2.1.2.2"
::= { detector 2 }

vehicleDetectorEntry   OBJECT-TYPE
      SYNTAX VehicleDetectorEntry
      ACCESS not-accessible
      STATUS mandatory
      DESCRIPTION "<Definition> Parameters for a specific Controller Unit
            detector.
      <Object Identifier> 1.3.6.1.4.1.1206.4.2.1.2.2.1"
      INDEX   { vehicleDetectorNumber }
::= { vehicleDetectorTable 1 }

VehicleDetectorEntry ::= SEQUENCE {
      vehicleDetectorNumber                  INTEGER,
      vehicleDetectorOptions                 INTEGER,
      vehicleDetectorCallPhase               INTEGER,
      vehicleDetectorSwitchPhase             INTEGER,
      vehicleDetectorDelay                   INTEGER,
      vehicleDetectorExtend                  INTEGER,
      vehicleDetectorQueueLimit              INTEGER,
      vehicleDetectorNoActivity              INTEGER,
      vehicleDetectorMaxPresence             INTEGER,
      vehicleDetectorErraticCounts           INTEGER,
      vehicleDetectorFailTime                INTEGER,
      vehicleDetectorAlarms                  INTEGER,
```

 © 2023 AASHTO / ITE / NEMA

```
      vehicleDetectorReportedAlarms          INTEGER,
      vehicleDetectorReset                   INTEGER,
      vehicleDetectorOptions2                INTEGER,
      vehicleDetectorPairedDetector          INTEGER,
      vehicleDetectorPairedDetectorSpacing   INTEGER,
      vehicleDetectorAvgVehicleLength        INTEGER,
      vehicleDetectorLength                  INTEGER,
      vehicleDetectorTravelMode              INTEGER }
```

#### 5.3.2.1 Vehicle Detector Number

```
vehicleDetectorNumber   OBJECT-TYPE
      SYNTAX INTEGER (1..255)
      ACCESS read-only
      STATUS mandatory
      DESCRIPTION "<Definition> The vehicle detector number for objects in
            this row. The value shall not exceed the maxVehicleDetectors
            object value.
      <Object Identifier> 1.3.6.1.4.1.1206.4.2.1.2.2.1.1
      <Object Type> S
      <Unit> detector"
::= { vehicleDetectorEntry 1 }
```

#### 5.3.2.2 Vehicle Detector Options Parameter

```
vehicleDetectorOptions   OBJECT-TYPE
      SYNTAX INTEGER (0..255)
      ACCESS read-write
      STATUS mandatory
      DESCRIPTION "<Definition> Vehicle Detector Options Parameter as follows
            (0=Disabled, 1=Enabled):
            Bit 7: Call - if Enabled, the CU shall place a demand for
                  vehicular service on the assigned phase when the phase is
                  not timing the green interval and an actuation is present.
            Bit 6: Queue - if Enabled, the CU shall extend the green interval
                  of the assigned phase until a gap occurs (no actuation) or
                  until the green has been active longer than the
                  vehicleDetectorQueueLimit time. This is optional.
            Bit 5: AddedInitial - if Enabled, the CU shall accumulate
                  detector actuation counts for use in the added initial
                  calculations. Counts shall be accumulated from the
                  beginning of the yellow interval to the beginning of the
                  green interval.
            Bit 4: Passage - if Enabled, the CU shall maintain a reset to the
                  associated phase passage timer for the duration of the
                  detector actuation when the phase is green.
            Bit 3: Red Lock Call - if Enabled, the detector will lock a call
                  to the assigned phase if an actuation occurs while the
                  phase is not timing Green or Yellow. This mode is optional.
            Bit 2: Yellow Lock Call - if Enabled, the detector will lock a
                  call to the assigned phase if an actuation occurs while the
                  phase is not timing Green.
            Bit 1: Occupancy Detector - if Enabled, the detector collects
                  data for the associated detector occupancy object(s). This
                  capability may not be supported on all detector inputs to a
                  device.
```

© 2023 AASHTO / ITE / NEMA 

```
            Bit 0: Volume Detector - if Enabled, the detector collects data
                  for the associated detector volume object(s). This
                  capability may not be supported on all detector inputs to a
                  device.
            A SET of both bits 2 & 3 = 1 shall result in bit 2=1 and bit 3=0.
      <Object Identifier> 1.3.6.1.4.1.1206.4.2.1.2.2.1.2
      <Object Type> P"
::= { vehicleDetectorEntry 2}

-- Note: { vehicleDetectorEntry 3} is not used.
```

#### 5.3.2.3 Vehicle Detector Call Phase Parameter

```
vehicleDetectorCallPhase   OBJECT-TYPE
      SYNTAX INTEGER (0..255)
      ACCESS read-write
      STATUS mandatory
      DESCRIPTION "<Definition> This object contains assigned phase number
            for the detector input associated with this row. The associated
            detector call capability is enabled when this object is set to a
            non-zero value. The value shall not exceed the value of
            maxPhases.
      <Object Identifier> 1.3.6.1.4.1.1206.4.2.1.2.2.1.4
      <Object Type> P
      <Unit> phase"
      REFERENCE "NEMA TS 2 Clause 3.5.5.5.4 and 3.5.5.5.5"
::= { vehicleDetectorEntry 4 }
```

#### 5.3.2.4 Vehicle Detector Switch Phase Parameter

```
vehicleDetectorSwitchPhase   OBJECT-TYPE
      SYNTAX INTEGER (0..255)
      ACCESS read-write
      STATUS mandatory
      DESCRIPTION "<Definition> Detector Switch Phase Parameter (i.e., Phase
            Number). The phase to which a vehicle detector actuation shall be
            switched when the assigned phase is Yellow or Red and the Switch
            Phase is Green.
      <Object Identifier> 1.3.6.1.4.1.1206.4.2.1.2.2.1.5
      <Object Type> P
      <Unit> phase"
      REFERENCE "NEMA TS 2 Clause 3.5.5.5.4.c"
::= { vehicleDetectorEntry 5 }
```

#### 5.3.2.5 Vehicle Detector Delay Parameter

```
vehicleDetectorDelay   OBJECT-TYPE
      SYNTAX INTEGER (0..65535)
      ACCESS read-write
      STATUS mandatory
      DESCRIPTION "<Definition> Detector Delay Parameter in tenth seconds (0-
            255.0 sec). The period a detector actuation (input recognition)
            shall be delayed when the phase is not Green. If a management
            station attempts to set a value between 2551 and 65535,
            inclusive, the parameter is undefined.
      <Object Identifier> 1.3.6.1.4.1.1206.4.2.1.2.2.1.6
```

Copy Per MIB Distribution Permission © 2023 AASHTO / ITE / NEMA

```
      <Object Type> P
      <Unit> tenth second"
      REFERENCE "NEMA TS 2 Clause 3.5.5.5.4.a"
::= { vehicleDetectorEntry 6 }
```

#### 5.3.2.6 Vehicle Detector Extend Parameter

```
vehicleDetectorExtend   OBJECT-TYPE
      SYNTAX INTEGER (0..255)
      ACCESS read-write
      STATUS mandatory
      DESCRIPTION "<Definition> Detector Extend Parameter in tenth seconds
            (0-25.5 sec). The period a vehicle detector actuation (input
            duration) shall be extended from the point of termination, when
            the phase is Green.
      <Object Identifier> 1.3.6.1.4.1.1206.4.2.1.2.2.1.7
      <Object Type> P
      <Unit> tenth second"
      REFERENCE "NEMA TS 2 Clause 3.5.5.5.4.b"
::= { vehicleDetectorEntry 7 }
```

#### 5.3.2.7 Vehicle Detector Queue Limit

```
vehicleDetectorQueueLimit   OBJECT-TYPE
      SYNTAX INTEGER (0..255)
      ACCESS read-write
      STATUS mandatory
      DESCRIPTION "<Definition> Detector Queue Limit parameter in seconds
            (0-255 sec). The length of time that an actuation from a queue
            detector may continue into the phase green. This time begins when
            the phase becomes green and when it expires any associated
            detector inputs shall be ignored. This time may be shorter due to
            other overriding device parameters (i.e. Maximum time, Force
            Offs, ...).
      <Object Identifier> 1.3.6.1.4.1.1206.4.2.1.2.2.1.8
      <Object Type> P
      <Unit> second"
::= { vehicleDetectorEntry 8 }
```

#### 5.3.2.8 Vehicle Detector No Activity Parameter

```
vehicleDetectorNoActivity   OBJECT-TYPE
      SYNTAX INTEGER (0..255)
      ACCESS read-write
      STATUS mandatory
      DESCRIPTION "<Definition> Detector No Activity diagnostic Parameter in
            minutes (0-255 min.). If an active detector does not exhibit an
            actuation in the specified period, it is considered a fault by
            the diagnostics and the detector is classified as Failed. A value
            of 0 for this object shall disable this diagnostic for this
            detector.
      <Object Identifier> 1.3.6.1.4.1.1206.4.2.1.2.2.1.9
      <Object Type> P
      <Unit> minute"
      REFERENCE "NEMA TS 2 Clause 3.9.3.1.4.1"
::= { vehicleDetectorEntry 9 }
```

© 2023 AASHTO / ITE / NEMA Copy Per MIB Distribution Permission

#### 5.3.2.9 Vehicle Detector Maximum Presence Parameter

```
vehicleDetectorMaxPresence   OBJECT-TYPE
      SYNTAX INTEGER (0..255)
      ACCESS read-write
      STATUS mandatory
      DESCRIPTION "<Definition> Detector Maximum Presence diagnostic
            Parameter in minutes (0-255 min.). If an active detector exhibits
            continuous detection for too long a period, it is considered a
            fault by the diagnostics and the detector is classified as
            Failed. A value of 0 for this object shall disable this
            diagnostic for this detector.
      <Object Identifier> 1.3.6.1.4.1.1206.4.2.1.2.2.1.10
      <Object Type> P
      <Unit> minute"
      REFERENCE "NEMA TS 2 Clause 3.9.3.1.4.2"
::= { vehicleDetectorEntry 10 }
```

#### 5.3.2.10 Vehicle Detector Erratic Counts Parameter

```
vehicleDetectorErraticCounts   OBJECT-TYPE
      SYNTAX INTEGER (0..255)
      ACCESS read-write
      STATUS mandatory
      DESCRIPTION "<Definition> Detector Erratic Counts diagnostic Parameter
            in counts/minute (0-255 cpm). If an active detector exhibits
            excessive actuations, it is considered a fault by the diagnostics
            and the detector is classified as Failed. A value of 0 for this
            object shall disable this diagnostic for this detector.
      <Object Identifier> 1.3.6.1.4.1.1206.4.2.1.2.2.1.11
      <Object Type> P
      <Unit> count"
      REFERENCE "NEMA TS 2 Clause 3.9.3.1.4.3"
::= { vehicleDetectorEntry 11 }
```

#### 5.3.2.11 Vehicle Detector Fail Time Parameter

```
vehicleDetectorFailTime   OBJECT-TYPE
      SYNTAX INTEGER (0..255)
      ACCESS read-write
      STATUS mandatory
      DESCRIPTION "<Definition> Detector Fail Time in seconds (0..255 sec).
            If a detector diagnostic indicates that the associated detector
            input is failed, then a call shall be placed on the associated
            phase during all non-green intervals. When each green interval
            begins the call shall be maintained for the length of time
            specified by this object and then removed. If the value of this
            object equals the maximum value (255) then a constant call shall
            be placed on the associated phase (max recall). If the value of
            this object equals zero then no call shall be placed on the
            associated phase for any interval (no recall). Compliant devices
            may support a limited capability for this object (i.e. only max
            recall or max recall and no recall). At a minimum the max recall
            setting must be supported.
      <Object Identifier> 1.3.6.1.4.1.1206.4.2.1.2.2.1.12
```

 © 2023 AASHTO / ITE / NEMA

```
      <Object Type> P
      <Unit> second"
::= { vehicleDetectorEntry 12 }
```

#### 5.3.2.12 Vehicle Detector Alarms

```
vehicleDetectorAlarms   OBJECT-TYPE
      SYNTAX INTEGER (0..255)
      ACCESS read-only
      STATUS mandatory
      DESCRIPTION "<Definition> This object shall return indications of
            detector alarms. Detector Alarms are indicated as follows:
            Bit 7: Other Fault - The detector has failed due to some other
                  cause.
            Bit 6: Reserved.
            Bit 5: Reserved.
            Bit 4: Configuration Fault - Detector is assigned but is not
                  supported.
            Bit 3: Communications Fault - Communications to the device (if
                  present) have failed.
            Bit 2: Erratic Output Fault - This detector has been flagged as
                  non-operational due to erratic outputs (excessive counts)
                  by the CU detector diagnostic.
            Bit 1: Max Presence Fault - This detector has been flagged as
                  non-operational due to a presence indicator that exceeded
                  the maximum expected time by the CU detector diagnostic.
            Bit 0: No Activity Fault - This detector has been flagged as non-
                  operational due to lower than expected activity by the CU
                  detector diagnostic.
            Once set a bit shall maintain its state as long as the condition
            exists. The bit shall clear when the condition no longer exists.
      <Object Identifier> 1.3.6.1.4.1.1206.4.2.1.2.2.1.13
      <Object Type> S"
::= { vehicleDetectorEntry  13 }
```

#### 5.3.2.13 Vehicle Detector Reported Alarms

```
vehicleDetectorReportedAlarms   OBJECT-TYPE
      SYNTAX INTEGER (0..255)
      ACCESS read-only
      STATUS mandatory
      DESCRIPTION "<Definition> This object shall return detector device
            reported alarms (via some communications mechanism). Inductive
            Loop Detector Alarms are indicated as follows:
            Bit 7: Reserved.
            Bit 6: Reserved.
            Bit 5: Reserved.
            Bit 4: Excessive Change Fault - This detector has been flagged as
                  non-operational due to an inductance change that exceeded
                  expected values.
            Bit 3: Shorted Loop Fault - This detector has been flagged as
                  non-operational due to a shorted loop wire.
            Bit 2: Open Loop Fault - This detector has been flagged as non-
                  operational due to an open loop (broken wire).
            Bit 1: Watchdog Fault - This detector has been flagged as non-
                  operational due to a watchdog error.
```

© 2023 AASHTO / ITE / NEMA Copy Per MIB Distribution Permission

```
            Bit 0: Other - This detector has been flagged as non-operational
                  due to some other error.
            Once set a bit shall maintain its state as long as the condition
            exists. The bit shall clear when the condition no longer exists.
      <Object Identifier> 1.3.6.1.4.1.1206.4.2.1.2.2.1.14
      <Object Type> S"
::= { vehicleDetectorEntry  14 }
```

#### 5.3.2.14 Vehicle Detector Reset

```
vehicleDetectorReset   OBJECT-TYPE
      SYNTAX INTEGER (0..1)
      ACCESS read-write
      STATUS mandatory
      DESCRIPTION "<Definition> This object when set to TRUE (one) shall
            cause the CU to command the associated detector to reset. This
            object shall automatically return to FALSE (zero) after the CU
            has issued the reset command.
            Note: this may affect other detector (detector channels) that are
            physically attached to a common reset line.
      <Object Identifier> 1.3.6.1.4.1.1206.4.2.1.2.2.1.15
      <Object Type> C"
::= { vehicleDetectorEntry 15 }
```

#### 5.3.2.15 Vehicle Detector Options 2

```
vehicleDetectorOptions2  OBJECT-TYPE
      SYNTAX  INTEGER (0..255)
      ACCESS  read-write
      STATUS  mandatory
      DESCRIPTION "<Definition> A bit-mapped value as defined below for
            configuring detector options.
      <Format>
      bits 7-3    Reserved.
      bit 2   0=CUSTOM, 1=NTCIP  Default Detector Speed Mode Option. For a
                           vehicle detector operating in pairs, this option
                           is used when there is an error on one of the
                           paired detectors. It identifies how the controller
                           should calculate speed without the other detector.
                           CUSTOM indicates a manufacturer specific
                           calculation. NTCIP indicates the use of the
                           calculation Speed = (Average Vehicle Length +
                           Detector Length) / Detect Time.
      bit 1   0=TRAIL, 1=LEAD  Detector Placement Option. For a vehicle
                           detector operating in pairs, this option indicates
                           the leading and trailing detectors. LEAD indicates
                           that the detector is the leading detector of the
                           pair. TRAIL indicates that the detector is a
                           trailing detector in the pair.
      bit 0   0=DISABLED, 1=ENABLED
                           Speed Detector. If enabled, the detector is used
                           to collect speed data (See volumeOccupancyTable
                           and detectorAvgSpeed). This capability may not be
                           supported on all detector inputs to a device.
      <Object Identifier> 1.3.6.1.4.1.1206.4.2.1.2.2.1.16
      <Object Type> P"
::= { vehicleDetectorEntry 16 }
```

 © 2023 AASHTO / ITE / NEMA

#### 5.3.2.16 Vehicle Detector Paired Detector

```
vehicleDetectorPairedDetector  OBJECT-TYPE
      SYNTAX  INTEGER (0..255)
      ACCESS  read-write
      STATUS  mandatory
      DESCRIPTION "<Definition> This is a detector identifier
            (vehicleDetectorNumber) that is used to determine speed. A value
            of 0 indicates there is no paired detector. Setting this value
            will automatically add this detector as the given detector's
            vehicleDetectorPairedDetector.
      <Object Identifier> 1.3.6.1.4.1.1206.4.2.1.2.2.1.17
      <Object Type> P"
      DEFVAL { 0 }
::= { vehicleDetectorEntry 17 }
```

#### 5.3.2.17 Vehicle Detector Paired Detector Spacing

```
vehicleDetectorPairedDetectorSpacing OBJECT-TYPE
      SYNTAX  INTEGER (0..65535)
      ACCESS  read-write
      STATUS  mandatory
      DESCRIPTION "<Definition> This parameter allows the user to set the
            spacing, in 0.01 meters, between paired detectors for use in
            calculating vehicle speeds. This parameter is measured from the
            leading edge of one detector to the leading edge of the paired
            detector. A value of 0 indicates there is no paired detector.
      <Object Identifier> 1.3.6.1.4.1.1206.4.2.1.2.2.1.18
      <Object Type> P
      <Unit> one-hundredth of a meter"
      DEFVAL { 0 }
::= { vehicleDetectorEntry 18 }
```

#### 5.3.2.18 Vehicle Detector Average Vehicle Length

```
vehicleDetectorAvgVehicleLength  OBJECT-TYPE
      SYNTAX  INTEGER (1..4000)
      ACCESS  read-write
      STATUS  mandatory
      DESCRIPTION "<Definition> This parameter allows the user to set the
            average vehicle length for use in determining speed and
            classification. This allows for a range of lengths between 0.01
            meters to 40 meters in length.
      <Object Identifier> 1.3.6.1.4.1.1206.4.2.1.2.2.1.19
      <Object Type> P
      <Unit> one-hundredth of a meter"
::= { vehicleDetectorEntry 19 }
```

#### 5.3.2.19 Vehicle Detector Length Parameter

```
vehicleDetectorLength  OBJECT-TYPE
      SYNTAX  INTEGER (1..65535)
      ACCESS  read-write
      STATUS  mandatory
```

© 2023 AASHTO / ITE / NEMA Copy Per MIB Distribution Permission

```
      DESCRIPTION "<Definition> This parameter allows the user to set the
            length of the detection zone. In the case of a loop detector,
            this is the length of the loop.
      <Valid Value Rule> Values 01 to 4000 are used to represent the length.
            This allows for a range of lengths between 0.01 meters to 40
            meters in length. The value of 65535 shall be returned to
            represent no length set. Values 4001 to 65534 are not used.
      <Object Identifier> 1.3.6.1.4.1.1206.4.2.1.2.2.1.20
      <Object Type> P
      <Unit> one-hundredth of a meter"
      DEFVAL { 65535 }
::= { vehicleDetectorEntry 20 }
```

#### 5.3.2.20 Vehicle Detector Travel Mode

```
vehicleDetectorTravelMode  OBJECT-TYPE
      SYNTAX  INTEGER { other (1),
            vehicle (2),
            transit (3),
            bicycle (4) }
      ACCESS  read-write
      STATUS  mandatory
      DESCRIPTION "<Definition> This parameter allows the user to identify
            detectors for specific types of travel modes.
            other: refers to a detector for a travel type not defined in this
            standard
            vehicle: refers to a detector identified for vehicles.
            transit: refers to a detector identified for transit vehicles.
            bicycle: refers to a detector identified for bicycles.
      <Object Identifier> 1.3.6.1.4.1.1206.4.2.1.2.2.1.21
      <Object Type> P"
      DEFVAL { vehicle }
::= { vehicleDetectorEntry 21 }
```

### 5.3.3 Maximum Vehicle Detector Status Groups

```
maxVehicleDetectorStatusGroups   OBJECT-TYPE
      SYNTAX INTEGER (1..255)
      ACCESS read-only
      STATUS mandatory
      DESCRIPTION "<Definition> The maximum number of detector status groups
            (8 detectors per group) this device supports. This value is equal
            to TRUNCATE [(maxVehicleDetectors + 7 ) / 8]. This object
            indicates the maximum number of rows which shall appear in the
            vehicleDetectorStatusGroupTable object.
      <Object Identifier> 1.3.6.1.4.1.1206.4.2.1.2.3
      <Object Type> S
      <Unit> group"
::= { detector 3 }
```

### 5.3.4 Vehicle Detector Status Group Table

```
vehicleDetectorStatusGroupTable   OBJECT-TYPE
      SYNTAX SEQUENCE OF VehicleDetectorStatusGroupEntry
      ACCESS not-accessible
      STATUS mandatory
```

 © 2023 AASHTO / ITE / NEMA

```
      DESCRIPTION "<Definition> A table containing detector status in groups
            of eight detectors. The number of rows in this table is equal to
            the maxVehicleDetectorStatusGroups object.
      <TableType> static
      <Object Identifier> 1.3.6.1.4.1.1206.4.2.1.2.4"
::= { detector 4 }

vehicleDetectorStatusGroupEntry   OBJECT-TYPE
      SYNTAX VehicleDetectorStatusGroupEntry
      ACCESS not-accessible
      STATUS mandatory
      DESCRIPTION "<Definition> A group (row) of detector status.
      <Object Identifier> 1.3.6.1.4.1.1206.4.2.1.2.4.1"
      INDEX  { vehicleDetectorStatusGroupNumber }
::= { vehicleDetectorStatusGroupTable  1 }

VehicleDetectorStatusGroupEntry ::= SEQUENCE {
      vehicleDetectorStatusGroupNumber    INTEGER,
      vehicleDetectorStatusGroupActive    INTEGER,
      vehicleDetectorStatusGroupAlarms    INTEGER }
```

#### 5.3.4.1 Detector Status Group Number

```
vehicleDetectorStatusGroupNumber   OBJECT-TYPE
      SYNTAX INTEGER (1..255)
      ACCESS read-only
      STATUS mandatory
      DESCRIPTION "<Definition> The detector status group number for objects
            in this row. This value shall not exceed the
            maxVehicleDetectorStatusGroups object value.
      <Object Identifier> 1.3.6.1.4.1.1206.4.2.1.2.4.1.1
      <Object Type> S
      <Unit> group"
::= { vehicleDetectorStatusGroupEntry 1 }
```

#### 5.3.4.2 Detector Status Group Active

```
vehicleDetectorStatusGroupActive   OBJECT-TYPE
      SYNTAX INTEGER (0..255)
      ACCESS read-only
      STATUS mandatory
      DESCRIPTION "<Definition> This object shall return the detection STATUS
            of each detector associated with the group. Each detector shall
            be represented as ON (detect) or OFF (no-detect) by individual
            bits in this object. If a detector is ON then the associated bit
            shall be set (1). If a detector is OFF then the associated bit
            shall be clear (0).
            Bit 7: Det # = ( vehicleDetectorStatusGroupNumber * 8)
            Bit 6: Det # = ( vehicleDetectorStatusGroupNumber * 8) - 1
            Bit 5: Det # = ( vehicleDetectorStatusGroupNumber * 8) - 2
            Bit 4: Det # = ( vehicleDetectorStatusGroupNumber * 8) - 3
            Bit 3: Det # = ( vehicleDetectorStatusGroupNumber * 8) - 4
            Bit 2: Det # = ( vehicleDetectorStatusGroupNumber * 8) - 5
            Bit 1: Det # = ( vehicleDetectorStatusGroupNumber * 8) - 6
            Bit 0: Det # = ( vehicleDetectorStatusGroupNumber * 8) - 7
      <Object Identifier> 1.3.6.1.4.1.1206.4.2.1.2.4.1.2
      <Object Type> S"
```

© 2023 AASHTO / ITE / NEMA 

```
::= { vehicleDetectorStatusGroupEntry 2 }
```

#### 5.3.4.3 Detector Alarm Status

```
vehicleDetectorStatusGroupAlarms   OBJECT-TYPE
      SYNTAX INTEGER (0..255)
      ACCESS read-only
      STATUS mandatory
      DESCRIPTION "<Definition> This object shall return the alarm status of
            the detectors associated with the group. Each detector alarm
            status shall be represented as ON or OFF by individual bits in
            this object. If any detector alarm (defined in the
            vehicleDetectorAlarm object) is active the associated bit shall
            be set (1). If a detector alarm is not active the associated bit
            shall be clear (0).
            Bit 7: Det # = ( vehicleDetectorStatusGroupNumber * 8)
            Bit 6: Det # = ( vehicleDetectorStatusGroupNumber * 8) - 1
            Bit 5: Det # = ( vehicleDetectorStatusGroupNumber * 8) - 2
            Bit 4: Det # = ( vehicleDetectorStatusGroupNumber * 8) - 3
            Bit 3: Det # = ( vehicleDetectorStatusGroupNumber * 8) - 4
            Bit 2: Det # = ( vehicleDetectorStatusGroupNumber * 8) - 5
            Bit 1: Det # = ( vehicleDetectorStatusGroupNumber * 8) - 6
            Bit 0: Det # = ( vehicleDetectorStatusGroupNumber * 8) - 7
      <Object Identifier> 1.3.6.1.4.1.1206.4.2.1.2.4.1.3
      <Object Type> S"
::= { vehicleDetectorStatusGroupEntry 3 }
```

### 5.3.5 Volume / Occupancy Report

```
volumeOccupancyReport   OBJECT IDENTIFIER
::= { detector 5 }

-- This node contains the objects necessary to support volume /
-- occupancy reporting.
```

#### 5.3.5.1 Volume / Occupancy Sequence

```
volumeOccupancySequence   OBJECT-TYPE
      SYNTAX INTEGER (0..255)
      ACCESS read-only
      STATUS mandatory
      DESCRIPTION "<Definition> This object defines a Sequence Number for
            Volume/Occupancy data collection. This object is used to detect
            duplicate or missing reports. The value cycles within the limits
            of 0 to 255. This object is incremented by one at the expiration
            of the volumeOccupancyPeriod time.
      <Object Identifier> 1.3.6.1.4.1.1206.4.2.1.2.5.1
      <Object Type> S
      <Unit> sequence"
::= { volumeOccupancyReport 1 }
```

#### 5.3.5.2 Volume / Occupancy Period

```
volumeOccupancyPeriod   OBJECT-TYPE
      SYNTAX INTEGER (0..255)
      ACCESS read-write
```

Copy Per MIB Distribution Permission © 2023 AASHTO / ITE / NEMA

```
      STATUS mandatory
      DESCRIPTION "<Definition> This object defines the number of seconds (0-
            255 sec) that comprise the Volume/Occupancy/Speed collection
            period. When the collection period expires the device shall
            increment the volumeOccupancySequence, update the
            volumeOccupancyTable entries and reset the volume occupancy
            timer. If the value is 0, the value in volumeOccupancyPeriodV3 is
            used if supported. If both the volumeOccupancyPeriod and
            volumeOccupancyPeriodV3 are 0, then no sampling is to be
            performed. If both the volumeOccupancyPeriod and
            volumeOccupancyPeriodV3 are non-zero then the
            volumeOccupancyPeriod takes precedence.
      <Object Identifier> 1.3.6.1.4.1.1206.4.2.1.2.5.2
      <Object Type> P
      <Unit> second"
::= { volumeOccupancyReport 2 }
```

#### 5.3.5.3 Active Volume / Occupancy Detectors

```
activeVolumeOccupancyDetectors   OBJECT-TYPE
      SYNTAX INTEGER (0..255)
      ACCESS read-only
      STATUS mandatory
      DESCRIPTION "<Definition> The number of detectors in this device. This
            object indicates how many rows are in the volumeOccupancyTable
            object. There shall be a row for every detector that is
            collecting volume, occupancy, or speed data (refer to
            detectorOptions in the detectorTable).
      <Object Identifier> 1.3.6.1.4.1.1206.4.2.1.2.5.3
      <Object Type> S
      <Unit> detector"
::= { volumeOccupancyReport 3 }
```

#### 5.3.5.4 Volume / Occupancy Table

```
volumeOccupancyTable   OBJECT-TYPE
      SYNTAX SEQUENCE OF VolumeOccupancyEntry
      ACCESS not-accessible
      STATUS mandatory
      DESCRIPTION "<Definition> A table containing Detector Volume, Occupancy
            and Speed data collected. The number of rows in this table is
            equal to the activeVolumeOccupancyDetectors object.
      <TableType> static
      <Object Identifier> 1.3.6.1.4.1.1206.4.2.1.2.5.4"
::= { volumeOccupancyReport 4 }

volumeOccupancyEntry   OBJECT-TYPE
      SYNTAX VolumeOccupancyEntry
      ACCESS not-accessible
      STATUS mandatory
      DESCRIPTION "<Definition> The Volume, Occupancy and Speed data
            collected for one of the detectors in the device.
      <Object Identifier> 1.3.6.1.4.1.1206.4.2.1.2.5.4.1"
      INDEX   { vehicleDetectorNumber }
::= { volumeOccupancyTable 1 }

VolumeOccupancyEntry ::= SEQUENCE {
```

© 2023 AASHTO / ITE / NEMA Copy Per MIB Distribution Permission

```
      detectorVolume          INTEGER,
      detectorOccupancy       INTEGER,
      detectorAvgSpeed        INTEGER }
```

#### 5.3.5.4.1 Volume Data

```
detectorVolume   OBJECT-TYPE
      SYNTAX INTEGER (0..255)
      ACCESS read-only
      STATUS mandatory
      DESCRIPTION "<Definition> Detector Volume data collected over the
            volumeOccupancyPeriod. This value shall range from 0 to 254
            indicating the volume of traffic crossing the associated
            detectorNumber during the collection period. The value 255 shall
            indicate volume overflow.
      <Object Identifier> 1.3.6.1.4.1.1206.4.2.1.2.5.4.1.1
      <Object Type> S
      <Unit> volume"
::= { volumeOccupancyEntry 1 }
```

#### 5.3.5.4.2 Occupancy Data

```
detectorOccupancy   OBJECT-TYPE
      SYNTAX INTEGER (0..255)
      ACCESS read-only
      STATUS mandatory
      DESCRIPTION "<Definition> Detector Occupancy as a percentage of the
            volumeOccupancyPeriod over which the data was collected or
            Detector Unit Diagnostic Information. The value of the object
            shall indicate occupancy or detector diagnostic information as
            follows:
            Range       Meaning
            0-200       Detector Occupancy in 0.5% Increments
            201-209     Reserved
            210         Max Presence Fault
            211         No Activity Fault
            212         Open loop Fault
            213         Shorted loop Fault
            214         Excessive Change Fault
            215         Reserved
            216         Watchdog Fault
            217         Erratic Output Fault
            218-255     Reserved

            Faults shall be indicated for all collection periods during which
            a fault is detected if either occupancy data or volume data is
            being collected. The highest numbered fault shall be presented if
            more than one fault is active (i.e. indicate OpenLoop rather than
            NoActivity).
      <Object Identifier> 1.3.6.1.4.1.1206.4.2.1.2.5.4.1.2
      <Object Type> S
      <Unit> occupancy"
::= { volumeOccupancyEntry 2 }
```

 © 2023 AASHTO / ITE / NEMA

#### 5.3.5.4.3 Speed Data

```
detectorAvgSpeed OBJECT-TYPE
      SYNTAX INTEGER (0..511)
      ACCESS read-only
      STATUS mandatory
      DESCRIPTION  "<Definition> Average vehicle speed during the
            volumeOccupancyPeriod over which the data was collected. The
            value of the object shall indicate average vehicle speed as
            follows:
            Range Meaning
            0-508 Average vehicle speed in 0.5 kilometers per hour
            509   Reserved
            510   Average vehicle speed is 255 kilometers per hour or higher
            511   Invalid or missing value
      <Object Identifier> 1.3.6.1.4.1.1206.4.2.1.2.5.4.1.3
      <Object Type> S
      <Unit>0.5 kilometers/hour"
      DEFVAL { 511 }
::= { volumeOccupancyEntry 3 }
```

### 5.3.5.5 Volume / Occupancy Period—Version 3

```
volumeOccupancyPeriodV3   OBJECT-TYPE
      SYNTAX INTEGER (0..65535)
      ACCESS read-write
      STATUS mandatory
      DESCRIPTION "<Definition> This object indicates the number of seconds
            (0-3600 seconds) that comprise the Volume/Occupancy/Speed
            collection period. When the collection period expires the device
            shall increment the volumeOccupancySequence, update the
            volumeOccupancyTable entries and reset the volume occupancy
            timer. If the value is 0, the value in volumeOccupancyPeriod is
            used if indicated (has a valid non-zero value). If both the
            volumeOccupancyPeriod and volumeOccupancyPeriodV3 are 0, then no
            sampling is to be performed. If both the volumeOccupancyPeriod
            and volumeOccupancyPeriodV3 are non-zero then the
            volumeOccupancyPeriod takes precedence.

            A value of 65535 indicates that the sample period equal to
            current cycle length recorded at local zero. If the sample period
            is configured to use the cycle length but the ASC is running in
            Free mode, then no data collection is performed.

            Value             Indication
            0                 Value of volumeOccupancyPeriod is used if
                              indicated
            1-3600            Volume/Occupancy/Speed period in seconds
            3601-65534        Reserved
            65535             Sample period is same as cycle period recorded
                              at local zero.
      <Object Identifier> 1.3.6.1.4.1.1206.4.2.1.2.5.5
      <Object Type> P
      <Unit> second"
::= { volumeOccupancyReport 5 }
```

© 2023 AASHTO / ITE / NEMA Copy Per MIB Distribution Permission

#### 5.3.5.6 Volume / Occupancy Sample Time

```
detectorSampleTime   OBJECT-TYPE
      SYNTAX Counter
      ACCESS read-only
      STATUS mandatory
      DESCRIPTION "The local time, expressed in seconds since 00:00:00
            (midnight) January 1, 1970 of the same time offset, representing
            the end time of the last completed vehicle detector data
            collection period. This value changes by 3600 seconds in response
            to a DST event.
      <Object Identifier> 1.3.6.1.4.1.1206.4.2.1.2.5.6
      <Object Type> S
      <Unit> second"
::= { volumeOccupancyReport 6 }
```

#### 5.3.5.7 Volume / Occupancy Sample Duration

```
detectorSampleDuration   OBJECT-TYPE
      SYNTAX INTEGER (0..65535)
      ACCESS read-only
      STATUS mandatory
      DESCRIPTION "<Definition> This object indicates the number of seconds
            (1-3600 seconds) that comprise the duration of the pedestrian
            detector data collection period. A value of 0 indicates that
            duration is invalid. Values of 3601-65535 are reserved.
      <Object Identifier> 1.3.6.1.4.1.1206.4.2.1.2.5.7
      <Object Type> S
      <Unit> second"
::= { volumeOccupancyReport 7 }
```

### 5.3.6 Maximum Pedestrian Detectors

```
maxPedestrianDetectors OBJECT-TYPE
      SYNTAX INTEGER (1..255)
      ACCESS read-only
      STATUS mandatory
      DESCRIPTION "<Definition> The Maximum Number of Pedestrian Detectors
            this Controller Unit supports. This object indicates the maximum
            rows which shall appear in the pedestrianDetectorTable object.
      <Object Identifier> 1.3.6.1.4.1.1206.4.2.1.2.6
      <Object Type> S
      <Unit> detector"
::= { detector 6 }
```

### 5.3.7 Pedestrian Detector Parameter Table

```
pedestrianDetectorTable   OBJECT-TYPE
      SYNTAX SEQUENCE OF PedestrianDetectorEntry
      ACCESS not-accessible
      STATUS mandatory
      DESCRIPTION "<Definition> A table containing Controller Unit pedestrian
            detector parameters. The number of rows in this table is equal to
            the maxPedestrianDetectors object.
      <TableType> static
      <Object Identifier> 1.3.6.1.4.1.1206.4.2.1.2.7"
::= { detector 7 }
```

Copy Per MIB Distribution Permission © 2023 AASHTO / ITE / NEMA

```
pedestrianDetectorEntry   OBJECT-TYPE
      SYNTAX PedestrianDetectorEntry
      ACCESS not-accessible
      STATUS mandatory
      DESCRIPTION "<Definition> Parameters for a specific Controller Unit
            pedestrian detector.
      <Object Identifier> 1.3.6.1.4.1.1206.4.2.1.2.7.1"
      INDEX   { pedestrianDetectorNumber }
::= { pedestrianDetectorTable 1 }

PedestrianDetectorEntry ::= SEQUENCE {
      pedestrianDetectorNumber      INTEGER,
      pedestrianDetectorCallPhase   INTEGER,
      pedestrianDetectorNoActivity  INTEGER,
      pedestrianDetectorMaxPresence INTEGER,
      pedestrianDetectorErraticCounts     INTEGER,
      pedestrianDetectorAlarms      INTEGER,
      pedestrianDetectorReset       INTEGER,
      pedestrianButtonPushTime      INTEGER,
      pedestrianDetectorOptions   INTEGER }
```

#### 5.3.7.1 Pedestrian Detector Number

```
pedestrianDetectorNumber   OBJECT-TYPE
      SYNTAX INTEGER (1..255)
      ACCESS read-only
      STATUS mandatory
      DESCRIPTION "<Definition> The pedestrianDetector number for objects in
            this row. The value shall not exceed the maxPedestrianDetectors
            object value.
      <Object Identifier> 1.3.6.1.4.1.1206.4.2.1.2.7.1.1
      <Object Type> S
      <Unit> detector"
::= { pedestrianDetectorEntry 1 }
```

#### 5.3.7.2 Pedestrian Detector Call Phase Parameter

```
pedestrianDetectorCallPhase   OBJECT-TYPE
      SYNTAX INTEGER (0..255)
      ACCESS read-write
      STATUS mandatory
      DESCRIPTION "<Definition> This object contains assigned phase number
            for the pedestrian detector input associated with this row. The
            associated detector call capability is enabled when this object
            is set to a non-zero value. The value shall not exceed the value
            of maxPhases.
      <Object Identifier> 1.3.6.1.4.1.1206.4.2.1.2.7.1.2
      <Object Type> P
      <Unit> phase"
::= { pedestrianDetectorEntry 2 }
```

#### 5.3.7.3 Pedestrian Detector No Activity Parameter

```
pedestrianDetectorNoActivity   OBJECT-TYPE
      SYNTAX INTEGER (0..255)
```

© 2023 AASHTO / ITE / NEMA Copy Per MIB Distribution Permission

```
      ACCESS read-write
      STATUS mandatory
      DESCRIPTION "<Definition> Pedestrian Detector No Activity diagnostic
            Parameter in minutes (0-255 min.). If an active detector does not
            exhibit an actuation in the specified period, it is considered a
            fault by the diagnostics and the detector is classified as
            Failed. A value of 0 for this object shall disable this
            diagnostic for this detector.
      <Object Identifier> 1.3.6.1.4.1.1206.4.2.1.2.7.1.3
      <Object Type> P
      <Unit> minute"
      REFERENCE "NEMA TS 2 Clause 3.9.3.1.4.1"
::= { pedestrianDetectorEntry 3 }
```

#### 5.3.7.4 Pedestrian Detector Maximum Presence Parameter

```
pedestrianDetectorMaxPresence   OBJECT-TYPE
      SYNTAX INTEGER (0..255)
      ACCESS read-write
      STATUS mandatory
      DESCRIPTION "<Definition> Pedestrian Detector Maximum Presence
            diagnostic Parameter in minutes (0-255 min.). If an active
            detector exhibits continuous detection for too long a period, it
            is considered a fault by the diagnostics and the detector is
            classified as Failed. A value of 0 for this object shall disable
            this diagnostic for this detector.
      <Object Identifier> 1.3.6.1.4.1.1206.4.2.1.2.7.1.4
      <Object Type> P
      <Unit> minute"
      REFERENCE "NEMA TS 2 Clause 3.9.3.1.4.2"
::= { pedestrianDetectorEntry 4 }
```

#### 5.3.7.5 Pedestrian Detector Erratic Counts Parameter

```
pedestrianDetectorErraticCounts   OBJECT-TYPE
      SYNTAX INTEGER (0..255)
      ACCESS read-write
      STATUS mandatory
      DESCRIPTION "<Definition> Pedestrian Detector Erratic Counts diagnostic
            Parameter in counts/minute (0-255 cpm). If an active detector
            exhibits excessive actuations, it is considered a fault by the
            diagnostics and the detector is classified as Failed. A value of
            0 for this object shall disable this diagnostic for this
            detector.
      <Object Identifier> 1.3.6.1.4.1.1206.4.2.1.2.7.1.5
      <Object Type> P
      <Unit> count"
      REFERENCE "NEMA TS 2 Clause 3.9.3.1.4.3"
::= { pedestrianDetectorEntry 5 }
```

#### 5.3.7.6 Pedestrian Detector Alarms

```
pedestrianDetectorAlarms  OBJECT-TYPE
      SYNTAX   INTEGER (0..255)
      ACCESS read-only
      STATUS mandatory
```

 © 2023 AASHTO / ITE / NEMA

```
      DESCRIPTION "<Definition> This object shall return indications of
            detector alarms. Detector Alarms are indicated as follows (0 =
            False, 1 = True):
            Bit 7: Other Fault - The detector has failed due to some other
                  cause.
            Bit 6: Reserved.
            Bit 5: Reserved.
            Bit 4: Configuration Fault - Detector is assigned but is not
                  supported.
            Bit 3: Communications Fault - Communications to the device (if
                  present) have failed.
            Bit 2: Erratic Output Fault - This detector has been flagged as
                  non-operational due to erratic outputs (excessive counts)
                  by the CU detector diagnostic.
            Bit 1: Max Presence Fault - This detector has been flagged as
                  non-operational due to a presence indicator that exceeded
                  the maximum expected time by the CU detector diagnostic.
            Bit 0: No Activity Fault - This detector has been flagged as non-
                  operational due to lower than expected activity by the CU
                  detector diagnostic
            Once set a bit shall maintain its state as long as the condition
            exists. The bit shall clear when the condition no longer exists.
      <Object Identifier> 1.3.6.1.4.1.1206.4.2.1.2.7.1.6
      <Object Type> S"
::= { pedestrianDetectorEntry  6 }
```

#### 5.3.7.7 Pedestrian Detector Reset

```
pedestrianDetectorReset OBJECT-TYPE
      SYNTAX INTEGER (0..1)
      ACCESS read-write
      STATUS mandatory
      DESCRIPTION "<Definition> This object when set to TRUE (one) shall
            cause the CU to command the associated detector to reset. This
            object shall automatically return to FALSE (zero) after the CU
            has issued the reset command.
            Note: this may affect other detector (detector channels) that are
            physically attached to a common reset line.
      <Object Identifier> 1.3.6.1.4.1.1206.4.2.1.2.7.1.7
      <Object Type> C"
      DEFVAL { 0 }
      ::= { pedestrianDetectorEntry 7 }
```

#### 5.3.7.8 Pedestrian Pushbutton Duration Parameter

```
pedestrianButtonPushTime OBJECT-TYPE
      SYNTAX   INTEGER (0..255)
      ACCESS   read-write
      STATUS   mandatory
      DESCRIPTION "<Definition> The minimum amount of time, in tenths of a
            second, a pedestrian call button is pressed to actuate additional
            accessible features such as increased pedestrian crossing times
            (phasePedAlternateWalk) or pedestrian clearance times
            (phasePedAlternateClearance). A value of 0 indicates that all
            accessible pedestrian signal (APS) features are disabled for the
            associated detector.
      <Object Identifier> 1.3.6.1.4.1.1206.4.2.1.2.7.1.8
```

© 2023 AASHTO / ITE / NEMA Copy Per MIB Distribution Permission

```
      <Unit> tenth of a second"
      DEFVAL { 0 }
::= { pedestrianDetectorEntry 8 }
```

#### 5.3.7.9 Pedestrian Detector Options

```
pedestrianDetectorOptions OBJECT-TYPE
      SYNTAX   INTEGER (0..255)
      ACCESS   read-write
      STATUS   mandatory
      DESCRIPTION " <Definition> Pedestrian Detector Options Parameter as
            follows (0=Disabled, 1=Enabled):
            Bit 7: Reserved.
            Bit 6: Reserved.
            Bit 5: Reserved.
            Bit 4: Reserved.
            Bit 3: Reserved.
            Bit 2: Non-locking: If enabled, detector will place a non-locked
                  calls instead  of a locked calls.
            Bit 1: Alternate timing: If enabled, detector will place calls
                  for alternate ped timing instead of normal ped timing.
            Bit 0: Presence: If enabled, detector indicates presence of
                  pedestrians in the crosswalk instead of placing calls for
                  service.
      <Object Identifier> 1.3.6.1.4.1.1206.4.2.1.2.7.1.9
      <Object Type> P"
      DEFVAL { 0 }
::= { pedestrianDetectorEntry 9 }
```

### 5.3.8 Maximum Pedestrian Detector Groups

```
maxPedestrianDetectorGroups OBJECT-TYPE
      SYNTAX INTEGER (1..255)
      ACCESS read-only
      STATUS mandatory
      DESCRIPTION "<Definition> The maximum number of pedestrian detector
            status groups (8 detectors per group) this device supports. This
            value is equal to TRUNCATE [(maxPedestrianDetectors + 7 ) / 8].
            This object indicates the maximum number of rows which shall
            appear in the pedestrianDetectorStatusGroupTable object.
      <Object Identifier> 1.3.6.1.4.1.1206.4.2.1.2.8
      <Object Type> S
      <Unit> group"
::= { detector 8 }
```

### 5.3.9 Pedestrian Detector Status Group Table

```
pedestrianDetectorStatusGroupTable OBJECT-TYPE
      SYNTAX SEQUENCE OF PedestrianDetectorStatusGroupEntry
      ACCESS not-accessible
      STATUS mandatory
      DESCRIPTION "<Definition> A table containing pedestrian detector status
            in groups of eight detectors. The number of rows in this table is
            equal to the maxPedestrianDetectorGroups object.
      <TableType> static
      <Object Identifier> 1.3.6.1.4.1.1206.4.2.1.2.9"
```

 © 2023 AASHTO / ITE / NEMA

```
::= { detector 9 }

pedestrianDetectorStatusGroupEntry OBJECT-TYPE
      SYNTAX PedestrianDetectorStatusGroupEntry
      ACCESS not-accessible
      STATUS mandatory
      DESCRIPTION "<Definition> A group (row) of pedestrian detector status.
      <Object Identifier> 1.3.6.1.4.1.1206.4.2.1.2.9.1"
      INDEX { pedestrianDetectorStatusGroupNumber }
::= { pedestrianDetectorStatusGroupTable 1 }

PedestrianDetectorStatusGroupEntry ::= SEQUENCE {
      pedestrianDetectorStatusGroupNumber INTEGER,
      pedestrianDetectorStatusGroupActive INTEGER,
      pedestrianDetectorStatusGroupAlarms INTEGER }
```

#### 5.3.9.1 Pedestrian Detector Status Group Number

```
pedestrianDetectorStatusGroupNumber OBJECT-TYPE
      SYNTAX INTEGER (1..255)
      ACCESS read-only
      STATUS mandatory
      DESCRIPTION "<Definition> The pedestrian detector status group number
            for objects in this row. This value shall not exceed the
            maxPedestrianDetectorGroups object value.
      <Object Identifier> 1.3.6.1.4.1.1206.4.2.1.2.9.1.1
      <Object Type> S
      <Unit> group"
::= { pedestrianDetectorStatusGroupEntry 1 }
```

#### 5.3.9.2 Pedestrian Detector Status Group Active

```
pedestrianDetectorStatusGroupActive OBJECT-TYPE
      SYNTAX INTEGER (0..255)
      ACCESS read-only
      STATUS mandatory
      DESCRIPTION "<Definition> This object shall return the detection status
            of each pedestrian detector associated with the group. Each
            detector shall be represented as ON (detect) or OFF (no-detect)
            by individual bits in this object. If a detector is ON then the
            associated bit shall be set (1). If a detector is OFF then the
            associated bit shall be clear (0).
            Bit 7: Det # = ( pedestrianDetectorStatusGroupNumber * 8)
            Bit 6: Det # = ( pedestrianDetectorStatusGroupNumber * 8) - 1
            Bit 5: Det # = ( pedestrianDetectorStatusGroupNumber * 8) - 2
            Bit 4: Det # = ( pedestrianDetectorStatusGroupNumber * 8) - 3
            Bit 3: Det # = ( pedestrianDetectorStatusGroupNumber * 8) - 4
            Bit 2: Det # = ( pedestrianDetectorStatusGroupNumber * 8) - 5
            Bit 1: Det # = ( pedestrianDetectorStatusGroupNumber * 8) - 6
            Bit 0: Det # = ( pedestrianDetectorStatusGroupNumber * 8) - 7
      <Object Identifier> 1.3.6.1.4.1.1206.4.2.1.2.9.1.2
      <Object Type> S"
::= { pedestrianDetectorStatusGroupEntry 2 }
```

© 2023 AASHTO / ITE / NEMA 

#### 5.3.9.3 Pedestrian Detector Alarm Status

```
pedestrianDetectorStatusGroupAlarms   OBJECT-TYPE
      SYNTAX INTEGER (0..255)
      ACCESS read-only
      STATUS mandatory
      DESCRIPTION "<Definition> This object shall return the alarm status of
            the pedestrian detectors associated with the group. Each
            pedestrian detector alarm status shall be represented as ON or
            OFF by individual bits in this object. If any pedestrian detector
            alarm (defined in the pedestrianDetectorAlarms object) is active
            the associated bit shall be set (1). If a pedestrian detector
            alarm is not active the associated bit shall be clear (0).
            Bit 7: Det # = ( pedestrianDetectorStatusGroupNumber * 8)
            Bit 6: Det # = ( pedestrianDetectorStatusGroupNumber * 8) - 1
            Bit 5: Det # = ( pedestrianDetectorStatusGroupNumber * 8) - 2
            Bit 4: Det # = ( pedestrianDetectorStatusGroupNumber * 8) - 3
            Bit 3: Det # = ( pedestrianDetectorStatusGroupNumber * 8) - 4
            Bit 2: Det # = ( pedestrianDetectorStatusGroupNumber * 8) - 5
            Bit 1: Det # = ( pedestrianDetectorStatusGroupNumber * 8) - 6
            Bit 0: Det # = ( pedestrianDetectorStatusGroupNumber * 8) - 7
      <Object Identifier> 1.3.6.1.4.1.1206.4.2.1.2.9.1.3
      <Object Type> S"
::= { pedestrianDetectorStatusGroupEntry 3 }
```

### 5.3.10 Pedestrian Detector Report

```
pedestrianDetectorReport OBJECT IDENTIFIER
::= { detector 10 }

-- This node contains the objects necessary to support pedestrian
-- detector reporting.
```

#### 5.3.10.1 Pedestrian Sample Sequence

```
pedestrianDetectorSequence OBJECT-TYPE
      SYNTAX INTEGER (0..255)
      ACCESS read-only
      STATUS mandatory
      DESCRIPTION "<Definition> This object defines a Sequence Number for the
            pedestrian detector data collection. This object is used to
            detect duplicate or missing reports. The value cycles within the
            limits of 0 to 255. This object is incremented by one at the
            expiration of the pedestrianDetectorPeriod time.
      <Object Identifier> 1.3.6.1.4.1.1206.4.2.1.2.10.1
      <Object Type> S
      <Unit> sequence"
::= { pedestrianDetectorReport 1 }
```

#### 5.3.10.2 Pedestrian Sample Period

```
pedestrianDetectorPeriod OBJECT-TYPE
      SYNTAX INTEGER (0..65535)
      ACCESS read-write
      STATUS mandatory
      DESCRIPTION "<Definition> This object defines the number of seconds (0-
            3600 seconds) that comprise the pedestrian detector data
```

 © 2023 AASHTO / ITE / NEMA

```
            collection period. When the collection period expires the device
            shall increment the pedestrianDetectorSequence, update the
            pedestrianSampleTable entries and reset the pedestrian volume
            timer. A value of 0 indicates that no sampling is to be
            performed.

            A value of 65534 indicates that the pedestrian detector data
            collection period is equal to vehicle sample period in effect.

            A value of 65535 indicates that the sample period equal to
            current cycle length recorded at local zero. If the sample period
            is configured to use the cycle length but the ASC is running in
            Free mode, then no data collection is performed.

            Value             Indication
            0                 No pedestrian data collection is performed
            1-3600            Pedestrian data collection period in seconds
            3601-65533        Reserved
            65534             Pedestrian data collection period is equal to
                              the vehicle sample period in effect
            65535             Pedestrian data collection period is same as
                              cycle period recorded at local zero

      <Object Identifier> 1.3.6.1.4.1.1206.4.2.1.2.10.2
      <Object Type> P
      <Unit> second"
::= { pedestrianDetectorReport 2 }
```

#### 5.3.10.3 Active Pedestrian Sample Detectors

```
activePedestrianDetectors OBJECT-TYPE
      SYNTAX INTEGER (0..255)
      ACCESS read-only
      STATUS mandatory
      DESCRIPTION "<Definition> The number of detectors in this device. This
            object indicates how many rows are in the pedestrianSampleTable
            object. There shall be a row for every pedestrian detector that
            is collecting pedestrian data.
      <Object Identifier> 1.3.6.1.4.1.1206.4.2.1.2.10.3
      <Object Type> S
      <Unit> detector"
::= { pedestrianDetectorReport 3 }
```

#### 5.3.10.4 Pedestrian Sample Table

```
pedestrianSampleTable OBJECT-TYPE
      SYNTAX SEQUENCE OF PedestrianSampleEntry
      ACCESS not-accessible
      STATUS mandatory
      DESCRIPTION "<Definition> A table containing pedestrian data collected.
            The number of rows in this table is equal to the
            activePedestrianDetectors object.
      <TableType> static
      <Object Identifier> 1.3.6.1.4.1.1206.4.2.1.2.10.4"
::= { pedestrianDetectorReport 4 }

pedestrianSampleEntry OBJECT-TYPE
```

© 2023 AASHTO / ITE / NEMA Copy Per MIB Distribution Permission

```
      SYNTAX PedestrianSampleEntry
      ACCESS not-accessible
      STATUS mandatory
      DESCRIPTION "<Definition> The data collected for one of the detectors
            in the device as part of a pedestrian detector data collection.
      <Object Identifier> 1.3.6.1.4.1.1206.4.2.1.2.10.4.1"
      INDEX { pedestrianDetectorNumber }
::= { pedestrianSampleTable 1 }

PedestrianSampleEntry ::= SEQUENCE {
      pedestrianDetectorVolume INTEGER,
      pedestrianDetectorActuations INTEGER,
      pedestrianDetectorServices INTEGER }
```

#### 5.3.10.4.1 Pedestrian Sample Volume

```
pedestrianDetectorVolume OBJECT-TYPE
      SYNTAX INTEGER (0..255)
      ACCESS read-only
      STATUS mandatory
      DESCRIPTION "<Definition> Pedestrian detector data collected over the
            data collection period. This value shall range from 0 to 254
            indicating the volume of pedestrians crossing the associated
            pedestrian detector zone during the data collection period. The
            value 255 shall indicate volume overflow.
      <Object Identifier> 1.3.6.1.4.1.1206.4.2.1.2.10.4.1.1
      <Object Type> S
      <Unit> volume"
::= { pedestrianSampleEntry 1 }
```

#### 5.3.10.4.2 Pedestrian Sample Actuations

```
pedestrianDetectorActuations OBJECT-TYPE
      SYNTAX INTEGER (0..255)
      ACCESS read-only
      STATUS mandatory
      DESCRIPTION "<Definition> Pedestrian actuations collected over the data
            collection period. The value of the object shall indicate
            pedestrian actuations or pedestrian detector diagnostic
            information as follows:

            Value       Indication
            0-200       Number of actuations
            201         Number of actuations exceeds 200.
            202-208     Reserved
            209         Other Fault
            210         Max Presence Fault
            211         No Activity Fault
            212         Reserved
            213         Reserved
            214         Reserved
            215         Configuration Fault
            216         Communications Fault
            217         Erratic Output Fault
            218-255     Reserved
```

 © 2023 AASHTO / ITE / NEMA

```
            Faults shall be indicated for all collection periods during which
            a fault is detected if either pedestrian volume or pedestrian
            actuations is being collected. The highest numbered fault shall
            be presented if more than one fault is active (i.e. indicate
            OpenLoop rather than NoActivity).
      <Object Identifier> 1.3.6.1.4.1.1206.4.2.1.2.10.4.1.2
      <Object Type> S
      <Unit> volume"
::= { pedestrianSampleEntry 2 }
```

#### 5.3.10.4.3 Pedestrian Sample Services

```
pedestrianDetectorServices OBJECT-TYPE
      SYNTAX INTEGER (0..255)
      ACCESS read-only
      STATUS mandatory
      DESCRIPTION "<Definition> The number of pedestrian services (number of
            times the ped transitioned from don't walk to walk) collected
            over the data collection period. This value shall range from 0-
            254. A value of 255 indicates an overflow condition.
      <Object Identifier> 1.3.6.1.4.1.1206.4.2.1.2.10.4.1.3
      <Object Type> S
      <Unit> volume"
::= { pedestrianSampleEntry 3 }
```

### 5.3.10.5 Pedestrian Volume / Actuation Sample Time

```
pedestrianDetectorSampleTime   OBJECT-TYPE
      SYNTAX Counter
      ACCESS read-only
      STATUS mandatory
      DESCRIPTION "The local time expressed in seconds since 00:00:00
            (midnight) January 1, 1970 of the same time offset, representing
            the end time of the last completed pedestrian detector data
            collection period. This value changes by 3600 seconds in response
            to a DST event.
      <Object Identifier> 1.3.6.1.4.1.1206.4.2.1.2.10.5
      <Object Type> S
      <Unit> second"
::= { pedestrianDetectorReport 5 }
```

### 5.3.10.6 Pedestrian Volume / Actuation Sample Duration

```
pedestrianDetectorSampleDuration   OBJECT-TYPE
      SYNTAX INTEGER (0..65535)
      ACCESS read-only
      STATUS mandatory
      DESCRIPTION "<Definition> This object indicates the number of seconds
            (1-3600 seconds) that comprise the duration of the pedestrian
            detector data collection period. A value of 0 indicates that
            duration is invalid. Values of 3601-65535 are reserved.
      <Object Identifier> 1.3.6.1.4.1.1206.4.2.1.2.10.6
      <Object Type> S
      <Unit> second"
::= { pedestrianDetectorReport 6 }
```

© 2023 AASHTO / ITE / NEMA Copy Per MIB Distribution Permission

### 5.3.11 Maximum Vehicle Detector Control Groups

```
maxVehicleDetectorControlGroups   OBJECT-TYPE
      SYNTAX INTEGER (1..255)
      ACCESS read-only
      STATUS mandatory
      DESCRIPTION "<Definition> The maximum number of vehicle detector
            control groups (8 detectors per group) this device supports. This
            value is equal to TRUNCATE [(maxVehicleDetectors + 7 ) / 8]. This
            object indicates the maximum number of rows which shall appear in
            the vehicleDetectorControlGroupTable object.
      <Object Identifier> 1.3.6.1.4.1.1206.4.2.1.2.11
      <Object Type> S
      <Unit> group"
::= { detector 11 }
```

#### 5.3.11.1 Vehicle Detector Control Group Table

```
vehicleDetectorControlGroupTable   OBJECT-TYPE
      SYNTAX SEQUENCE OF VehicleDetectorControlGroupEntry
      ACCESS not-accessible
      STATUS mandatory
      DESCRIPTION "<Definition> A table containing vehicle detector control
            in groups of eight detectors. The number of rows in this table is
            equal to the maxVehicleDetectorControlGroups object.
      <TableType> static
      <Object Identifier> 1.3.6.1.4.1.1206.4.2.1.2.12"
::= { detector 12 }

vehicleDetectorControlGroupEntry   OBJECT-TYPE
      SYNTAX VehicleDetectorControlGroupEntry
      ACCESS not-accessible
      STATUS mandatory
      DESCRIPTION "<Definition> A group (row) of vehicle detector controls.
      <Object Identifier> 1.3.6.1.4.1.1206.4.2.1.2.12.1"
      INDEX  { vehicleDetectorControlGroupNumber }
::= { vehicleDetectorControlGroupTable  1 }

VehicleDetectorControlGroupEntry ::= SEQUENCE {
      vehicleDetectorControlGroupNumber   INTEGER,
      vehicleDetectorControlGroupActuation      INTEGER }
```

#### 5.3.11.2 Vehicle Detector Control Group Number

```
vehicleDetectorControlGroupNumber   OBJECT-TYPE
      SYNTAX INTEGER (1..255)
      ACCESS read-only
      STATUS mandatory
      DESCRIPTION "<Definition> The vehicle detector control group number for
            objects in this row. This value shall not exceed the
            maxVehicleDetectorControlGroups object value.
      <Object Identifier> 1.3.6.1.4.1.1206.4.2.1.2.12.1.1
      <Object Type> S
```

 © 2023 AASHTO / ITE / NEMA

```
      <Unit> group"
::= { vehicleDetectorControlGroupEntry 1 }
```

#### 5.3.11.3 Vehicle Detector Control Group Actuation

```
vehicleDetectorControlGroupActuation   OBJECT-TYPE
      SYNTAX INTEGER (0..255)
      ACCESS read-write
      STATUS mandatory
      DESCRIPTION "<Definition> This object is used to allow a remote entity
            to place an actuation on a vehicle detector. When a bit = 1, an
            actuation is placed on the vehicle detector. When a bit = 0, no
            actuation is placed on the vehicle detector. An NTCIP actuation
            is placed using this object and is treated the same as an
            external actuation, so all detector functions are still
            applicable, including delay, extension, diagnostics, and report
            objects, such as vehicleDetectorStatusGroupActive and
            volumeOccupancyReport.
            Bit 7: Det # = ( vehicleDetectorControlGroupNumber * 8)
            Bit 6: Det # = ( vehicleDetectorControlGroupNumber * 8) - 1
            Bit 5: Det # = ( vehicleDetectorControlGroupNumber * 8) - 2
            Bit 4: Det # = ( vehicleDetectorControlGroupNumber * 8) - 3
            Bit 3: Det # = ( vehicleDetectorControlGroupNumber * 8) - 4
            Bit 2: Det # = ( vehicleDetectorControlGroupNumber * 8) - 5
            Bit 1: Det # = ( vehicleDetectorControlGroupNumber * 8) - 6
            Bit 0: Det # = ( vehicleDetectorControlGroupNumber * 8) - 7
            The device shall reset this object to ZERO when in BACKUP Mode. A
            write to this object shall reset the Backup timer to ZERO (see
            unitBackupTime).
            <Object Type> P
      <Object Identifier> 1.3.6.1.4.1.1206.4.2.1.2.12.1.2"
::= { vehicleDetectorControlGroupEntry 2 }
```

### 5.3.12 Pedestrian Detector Control Group Table

```
pedestrianDetectorControlGroupTable   OBJECT-TYPE
      SYNTAX SEQUENCE OF PedestrianDetectorControlGroupEntry
      ACCESS not-accessible
      STATUS mandatory
      DESCRIPTION "<Definition> A table containing pedestrian detector
            control in groups of eight detectors. The number of rows in this
            table is equal to the maxPedestrianDetectorGroups object.
      <TableType> static
      <Object Identifier> 1.3.6.1.4.1.1206.4.2.1.2.13"
::= { detector 13 }

pedestrianDetectorControlGroupEntry   OBJECT-TYPE
      SYNTAX PedestrianDetectorControlGroupEntry
      ACCESS not-accessible
      STATUS mandatory
      DESCRIPTION "<Definition> A group (row) of pedestrian detector
            controls.
      <Object Identifier> 1.3.6.1.4.1.1206.4.2.1.2.13.1"
      INDEX  { pedestrianDetectorControlGroupNumber }
::= { pedestrianDetectorControlGroupTable  1 }
```

© 2023 AASHTO / ITE / NEMA 

```
PedestrianDetectorControlGroupEntry ::= SEQUENCE {
      pedestrianDetectorControlGroupNumber      INTEGER,
      pedestrianDetectorControlGroupActuation   INTEGER }
```

#### 5.3.12.1 Pedestrian Detector Control Group Number

```
pedestrianDetectorControlGroupNumber   OBJECT-TYPE
      SYNTAX INTEGER (1..255)
      ACCESS read-only
      STATUS mandatory
      DESCRIPTION "<Definition> The pedestrian detector control group number
            for objects in this row. This value shall not exceed the
            maxPedestrianDetectorGroups object value.
      <Object Identifier> 1.3.6.1.4.1.1206.4.2.1.2.13.1.1
      <Object Type> S
      <Unit> group"
::= { pedestrianDetectorControlGroupEntry 1 }
```

#### 5.3.12.2 Pedestrian Detector Control Group Actuation

```
pedestrianDetectorControlGroupActuation   OBJECT-TYPE
      SYNTAX INTEGER (0..255)
      ACCESS read-write
      STATUS mandatory
      DESCRIPTION "<Definition> This object is used to allow a remote entity
            to place an actuation on a pedestrian detector. When a bit = 1,
            an actuation is placed on the pedestrian detector. When a bit =
            0, no actuation is placed on the pedestrian detector. An NTCIP
            actuation is placed using this object and is treated the same as
            an external actuation, so all detector functions are still
            applicable, including delay, extension, diagnostics, and report
            objects, such as pedestrianDetectorStatusGroupActive and
            pedestrianDetectorReport.
            Bit 7: Det # = ( pedestrianDetectorControlGroupNumber * 8)
            Bit 6: Det # = ( pedestrianDetectorControlGroupNumber * 8) - 1
            Bit 5: Det # = ( pedestrianDetectorControlGroupNumber * 8) - 2
            Bit 4: Det # = ( pedestrianDetectorControlGroupNumber * 8) - 3
            Bit 3: Det # = ( pedestrianDetectorControlGroupNumber * 8) - 4
            Bit 2: Det # = ( pedestrianDetectorControlGroupNumber * 8) - 5
            Bit 1: Det # = ( pedestrianDetectorControlGroupNumber * 8) - 6
            Bit 0: Det # = ( pedestrianDetectorControlGroupNumber * 8) - 7
            The device shall reset this object to ZERO when in BACKUP Mode. A
            write to this object shall reset the Backup timer to ZERO (see
            unitBackupTime).
      <Object Identifier> 1.3.6.1.4.1.1206.4.2.1.2.13.1.2
      <Object Type> C"
::= { pedestrianDetectorControlGroupEntry 2 }
```

### 5.4 Unit Parameters

```
unit OBJECT IDENTIFIER
::= { asc 3 }

--This defines a node for supporting unit objects.
```

 © 2023 AASHTO / ITE / NEMA

### 5.4.1 Startup Flash Parameter

```
unitStartUpFlash   OBJECT-TYPE
      SYNTAX INTEGER (0..255)
      ACCESS read-write
      STATUS mandatory
      DESCRIPTION "<Definition> Unit Start up Flash time parameter in seconds
            (0 to 255 sec). The period/state (Start-Up Flash) occurs when
            power is restored following a device defined power interruption.
            During the Start-Up Flash state, the Fault Monitor and Voltage
            Monitor outputs shall be inactive (if present) and the Channel
            Flash settings shall be overridden.
      <Object Identifier> 1.3.6.1.4.1.1206.4.2.1.3.1
      <Object Type> P
      <Unit> second"
      REFERENCE "NEMA TS 2 Clause 3.9.1.1"
::= { unit 1 }
```

### 5.4.2 Automatic Ped Clear Parameter

```
unitAutoPedestrianClear   OBJECT-TYPE
      SYNTAX INTEGER { disable(1),
            enable (2) }
      ACCESS read-write
      STATUS mandatory
      DESCRIPTION "<Definition> Unit Automatic Ped Clear parameter (1 =
            False/Disable 2=True/Enable). When enabled, the CU shall time the
            Pedestrian Clearance interval when Manual Control Enable is
            active and prevent the Pedestrian Clearance interval from being
            terminated by the Interval Advance input.
      <Object Identifier> 1.3.6.1.4.1.1206.4.2.1.3.2
      <Object Type> P"
      REFERENCE "NEMA TS 2 Clause 3.5.3.10"
::= { unit 2 }
```

### 5.4.3 Backup Time Parameter

```
unitBackupTime   OBJECT-TYPE
      SYNTAX INTEGER (0..65535)
      ACCESS read-write
      STATUS mandatory
      DESCRIPTION "<Definition> The Backup Time in seconds (0-65535 sec).
            When any of the defined system control parameters is SET, the
            backup timer is reset. After reset the CU times the
            unitBackupTime interval. If the unitBackupTime interval expires
            without a SET operation to any of the system control parameters,
            then the CU shall revert to Backup Mode. A value of zero (0) for
            this object shall disable this feature. The setting of this
            object shall be ignored if the unitUserDefinedBackupTime is set
            to a non-zero value. The system control parameters are:
                  phaseControlGroupPhaseOmit,
                  phaseControlGroupPedOmit,
                  phaseControlGroupHold,
                  phaseControlGroupForceOff,
                  phaseControlGroupVehCall,
                  phaseControlGroupPedCall,
                  systemPatternControl,
```

© 2023 AASHTO / ITE / NEMA 

```
                  systemSyncControl,
                  preemptControlState,
                  ringControlGroupStopTime,
                  ringControlGroupForceOff,
                  ringControlGroupMax2,
                  ringControlGroupMaxInhibit,
                  ringControlGroupPedRecycle,
                  ringControlGroupRedRest,
                  ringControlGroupOmitRedClear,
                  unitControl,
                  specialFunctionOutputState (deprecated), and
                  specialFunctionOutputControl.

            These system control parameters are added for controllers that
            support 1202 v3 and above:
                  ringControlGroupMax3
                  vehicleDetectorControlGroupActuation
                  pedestrianDetectorControlGroupActuation
                  actionPlanControl
      <Object Identifier> 1.3.6.1.4.1.1206.4.2.1.3.3
      <Object Type> P
      <Unit> second"
::= { unit 3 }
```

### 5.4.4 Unit Red Revert Parameter

```
unitRedRevert OBJECT-TYPE
      SYNTAX INTEGER (0..255)
      ACCESS read-write
      STATUS mandatory
      DESCRIPTION "<Definition> The red revert in tenth seconds ( 0.0 - 25.5
            sec). This value shall provide the minimum red revert time for
            all phases (i.e. if it is greater than a phaseRedRevert object
            value, then this value shall be used as the red revert time for
            the affected phase). This object provides a minimum Red
            indication following the Yellow Change interval and prior to the
            next display of Green on the same signal output driver group.
      <Object Identifier> 1.3.6.1.4.1.1206.4.2.1.3.4
      <Object Type> P
      <Unit> tenth second"
::= { unit 4 }
```

### 5.4.5 Unit Control Status

```
unitControlStatus OBJECT-TYPE
      SYNTAX INTEGER { other (1),
            systemControl (2),
            systemStandby (3),
            backupMode(4),
            manual (5),
            timebase (6),
            interconnect (7),
            interconnectBackup (8),
            remoteManualControl (9),
            localManualControl (10) }
      ACCESS read-only
      STATUS mandatory
```

 © 2023 AASHTO / ITE / NEMA

```
      DESCRIPTION "<Definition> The Control Mode for Pattern, Flash, or Free
            at the device:
            other: control by a source other than those listed here.
            systemControl: control by master or central commands.
            systemStandby: control by local based on master or central
                  command to use local control.
            backupMode: Backup Mode (see Terms).
            manual: control by entry other than zero in coordOperationalMode.
            timebase: control by the local Time Base.
            interconnect: control by the local Interconnect inputs.
            interconnectBackup: control by local TBC due to invalid
                  Interconnect inputs or loss of sync.
            remoteManualControl: control by central command via remote MCE
                  commands (See unitMCEIntAdv and unitMCETimeout).
            localManualControl: control via MCE and Interval Advance inputs
                  (e.g., police panel)
      <Object Identifier> 1.3.6.1.4.1.1206.4.2.1.3.5
      <Object Type> S"
::= { unit 5 }
```

### 5.4.6 Unit Flash Status

```
unitFlashStatus OBJECT-TYPE
      SYNTAX INTEGER { other(1),
            notFlash(2),
            automatic(3),
            localManual(4),
            faultMonitor(5),
            mmu(6),
            startup(7),
            preempt (8) }
      ACCESS read-only
      STATUS mandatory
      DESCRIPTION "<Definition> The Flash modes:
            other: the CU is in flash for some other reason.
            notFlash: the CU is not in Flash
            automatic: the CU is currently in an Automatic Flash state.
            localManual: the Controller Unit Local Flash input is active, MMU
                  Flash input is not active, and Flash is not commanded by
                  the Master.
            faultMonitor: the CU is currently in a Fault Monitor State.
            mmu: the Controller Unit MMU Flash input is active and the CU is
                  not in Start-Up Flash.
            startup: the CU is currently timing the Start-Up Flash period.
            preempt: the CU is currently timing the preempt Flash.
      <Object Identifier> 1.3.6.1.4.1.1206.4.2.1.3.6
      <Object Type> S"
::= { unit 6 }
```

### 5.4.7 Unit Alarm Status 2

```
unitAlarmStatus2   OBJECT-TYPE
      SYNTAX INTEGER (0..255)
      ACCESS read-only
      STATUS mandatory
      DESCRIPTION "<Definition> Device Alarm Mask 2 ( 0 = False, 1 = True) as
            follows:
```

© 2023 AASHTO / ITE / NEMA 

```
            Bit 7: Process Failure - Whenever the CU detects a process (task)
                  failure.
            Bit 6: Stall Condition - Whenever the CU detects a watchdog
                  condition on any 'critical' watchdog. A 'critical' watchdog
                  timer is any timer for a process or service that may
                  jeopardize the safe operation of the ASC.
            Bit 5: Offset Transitioning - Whenever the CU is performing an
                  offset transition (correction in process)
            Bit 4: Stop Time - When either CU Stop Time Input becomes active.
            Bit 3: External Start - When the CU External Start becomes
                  active.
            Bit 2: Response Fault - When any NEMA TS2 Port 1 response frame
                  fault occurs.
            Bit 1: Low Battery - When any battery voltage falls below the
                  required level.
            Bit 0: Power Restart - When power returns after a power
                  interruption. Once set, a bit shall maintain its state as
                  long as the condition exists. Bit 0 (Power Restart) status
                  shall be maintained until a READ of this object occurs.
      <Object Identifier> 1.3.6.1.4.1.1206.4.2.1.3.7
      <Object Type> S"
::= { unit 7 }
```

### 5.4.8 Unit Alarm Status 1

```
unitAlarmStatus1   OBJECT-TYPE
      SYNTAX INTEGER (0..255)
      ACCESS read-only
      STATUS mandatory
      DESCRIPTION "<Definition> Device Alarm Mask 1 ( 0 = False, 1 = True) as
            follows:
            Bit 7: CoordActive - When coordination is active and not
                  preempted or overridden.
            Bit 6: Local Free - When any of the CU inputs and/or programming
                  cause it not to run coordination.
            Bit 5: Local Flash - When the Controller Unit Local Flash input
                  becomes active, MMU Flash input is not active, and Flash is
                  not commanded by the system.
            Bit 4: MMU Flash - When the Controller Unit MMU Flash input
                  remains active for a period of time exceeding the Start-Up
                  Flash time.
            Bit 3: Cycle Fail - When a local Controller Unit is operating in
                  the non-coordinated mode, whether the result of a Cycle
                  Fault or Free being the current normal mode, and cycling
                  diagnostics indicate that a serviceable call exists that
                  has not been serviced for two cycles.
            Bit 2: Coord Fail - When a Coord Fault is in effect and a Cycle
                  Fault occurs again within two cycles of the coordination
                  retry.
            Bit 1: Coord Fault - When a Cycle Fault is in effect and the
                  serviceable call has been serviced within two cycles after
                  the Cycle Fault.
            Bit 0: Cycle Fault - When the Controller Unit is operating in the
                  coordinated mode and cycling diagnostics indicate that a
                  serviceable call exists that has not been serviced for two
                  cycles.
```

 © 2023 AASHTO / ITE / NEMA

```
            Once set, a bit shall maintain its state as long as the condition
            exists.
      <Object Identifier> 1.3.6.1.4.1.1206.4.2.1.3.8
      <Object Type> S"
::= { unit 8 }
```

### 5.4.9 Short Alarm Status

```
shortAlarmStatus OBJECT-TYPE
      SYNTAX INTEGER (0..255)
      ACCESS read-only
      STATUS mandatory
      DESCRIPTION "<Definition> Short Alarm Mask ( 0 = False, 1 = True) as
            follows:
            Bit 7: Critical Alarm - When the Stop Time input is active.
            Bit 6: Non-Critical Alarm - When an physical alarm input is
                  active.
            Bit 5: Detector Fault - When any detectorAlarm fault occurs.
            Bit 4: Coordination Alarm - When the CU is not running the called
                  pattern without offset correction within three cycles of
                  the command. An offset correction requiring less than three
                  cycles due to cycle overrun caused by servicing a
                  pedestrian call shall not cause a Coordination Alarm.
            Bit 3: Local Override - When any of the CU inputs and/or
                  programming cause it not to run coordination.
            Bit 2: Local Cycle Zero - When running coordinated and the Coord
                  Cycle Status (coordCycleStatus) has passed through zero.
            Bit 1: T&F Flash - When either the Local Flash or MMU Flash input
                  becomes active.
            Bit 0: Preempt - When any of the CU Preempt inputs become active.
            Once set, a bit shall maintain its state as long as the condition
            exists. Bit 2 (Local Cycle Zero) status shall be maintained until
            a READ of this object occurs.
      <Object Identifier> 1.3.6.1.4.1.1206.4.2.1.3.9
      <Object Type> S"
::= { unit 9 }
```

### 5.4.10 Unit Control

```
unitControl   OBJECT-TYPE
      SYNTAX INTEGER (0..255)
      ACCESS read-write
      STATUS mandatory
      DESCRIPTION "<Definition> This object is used to allow a remote entity
            to activate unit functions in the device ( 0 = False / Disabled,
            1 = True / Enabled) as follows:
            Bit 7: Dimming Enable - when set to 1, causes channel dimming to
                  operate as configured. For dimming to occur, (this control
                  OR a dimming input) AND a 'timebaseAscAuxillaryFunction'
                  must be True.
                  REFERENCE NEMA TS 2 Clause 3.9.2
            Bit 6: Interconnect - when set to 1, shall cause the interconnect
                  inputs to operate at a higher priority than the timebase
                  control (TBC On Line).
                  REFERENCE NEMA TS 2 Clause 3.6.2.3 and 3.8.3
```

© 2023 AASHTO / ITE / NEMA Copy Per MIB Distribution Permission

```
            Bit 5: Walk Rest Modifier - when set to 1, causes non-actuated
                  phases to remain in the timed-out Walk state (rest in Walk)
                  in the absence of a serviceable conflicting call.
                  REFERENCE NEMA TS 2 Clause 3.5.5.5.13
            Bit 4: Call to Non-Actuated 2 - when set to 1, causes any
                  phase(s) appropriately programmed in the phaseOptions
                  object to operate in the Non-Actuated Mode.
                  REFERENCE NEMA TS 2 Clause 3.5.5.5.8
            Bit 3: Call to Non-Actuated 1 - when set to 1, causes any
                  phase(s) appropriately programmed in the phaseOptions
                  object to operate in the Non-Actuated Mode.
                  REFERENCE NEMA TS 2 Clause 3.5.5.5.8
            Bit 2: External Minimum Recall - when set to 1, causes a
                  recurring demand on all vehicle phases for a minimum
                  vehicle service.
                  REFERENCE NEMA TS 2 Clause 3.5.5.5.9
            Bit 1: Disable Remote Commands - when set to 1, causes a CU to
                  ignore commands (all SET requests) from all management
                  station except and until this bit is SET to 0 (i.e., a
                  management station can still SET this bit to 0 to enable
                  Remote Command).
            Bit 0: Reserved

            When a bit = 1, the device shall activate the Unit control. When
            a bit = 0, the device shall not activate the Unit control.
            A SET of a 'reserved' bit to a value other than zero (0) shall
            return a badValue(3) error.
            The device shall reset this object to ZERO when in BACKUP Mode. A
            write to this object shall reset the BACKUP timer (see
            unitBackupTime).
      <Object Identifier> 1.3.6.1.4.1.1206.4.2.1.3.10
      <Object Type> P"
::= { unit 10 }
```

### 5.4.11 Maximum Alarm Groups

```
maxAlarmGroups   OBJECT-TYPE
      SYNTAX INTEGER(1..255)
      ACCESS read-only
      STATUS mandatory
      DESCRIPTION "<Definition> This object contains the maximum number of
            alarm groups (8 alarm inputs per group) this device supports.
            This object indicates the maximum rows which shall appear in the
            alarmGroupTable object.
      <Object Identifier> 1.3.6.1.4.1.1206.4.2.1.3.11
      <Object Type> S
      <Unit> alarm Group"
::= { unit 11 }
```

### 5.4.12 Alarm Group Table

```
alarmGroupTable   OBJECT-TYPE
      SYNTAX SEQUENCE OF AlarmGroupEntry
      ACCESS not-accessible
      STATUS mandatory
```

 © 2023 AASHTO / ITE / NEMA

```
      DESCRIPTION "<Definition> This table contains alarm input status in
            groups of eight inputs. The number of rows in this table is equal
            to the maxAlarmGroups object.
      <TableType> static
      <Object Identifier> 1.3.6.1.4.1.1206.4.2.1.3.12"
::= { unit 12 }

alarmGroupEntry   OBJECT-TYPE
      SYNTAX AlarmGroupEntry
      ACCESS not-accessible
      STATUS mandatory
      DESCRIPTION "<Definition> Status for eight alarm inputs.
      <Object Identifier> 1.3.6.1.4.1.1206.4.2.1.3.12.1"
      INDEX  { alarmGroupNumber }
::= { alarmGroupTable 1 }

AlarmGroupEntry::= SEQUENCE {
      alarmGroupNumber  INTEGER,
      alarmGroupState   INTEGER}
```

#### 5.4.12.1 Alarm Group Number

```
alarmGroupNumber   OBJECT-TYPE
      SYNTAX INTEGER (1..255)
      ACCESS read-only
      STATUS mandatory
      DESCRIPTION "<Definition> The alarm group number for objects in this
            row. This value shall not exceed the maxAlarmGroups object value.
      <Object Identifier> 1.3.6.1.4.1.1206.4.2.1.3.12.1.1
      <Object Type> S
      <Unit> group"
::= { alarmGroupEntry 1 }
```

#### 5.4.12.2 Alarm Group State

```
alarmGroupState   OBJECT-TYPE
      SYNTAX INTEGER (0..255)
      ACCESS read-only
      STATUS mandatory
      DESCRIPTION "<Definition> Alarm input state bit field. When a bit = 1,
            the associated physical alarm input is  active. When a bit = 0,
            the associated alarm input is NOT active.
            Bit 7: Alarm Input # = ( alarmGroupNumber * 8)
            Bit 6: Alarm Input # = ( alarmGroupNumber * 8) -1
            Bit 5: Alarm Input # = ( alarmGroupNumber * 8) -2
            Bit 4: Alarm Input # = ( alarmGroupNumber * 8) -3
            Bit 3: Alarm Input # = ( alarmGroupNumber * 8) -4
            Bit 2: Alarm Input # = ( alarmGroupNumber * 8) -5
            Bit 1: Alarm Input # = ( alarmGroupNumber * 8) -6
            Bit 0: Alarm Input # = ( alarmGroupNumber * 8) -7
      <Object Identifier> 1.3.6.1.4.1.1206.4.2.1.3.12.1.2
      <Object Type> S"
::= {alarmGroupEntry 2 }
```

© 2023 AASHTO / ITE / NEMA 

### 5.4.13 Maximum Special Function Outputs

```
maxSpecialFunctionOutputs   OBJECT-TYPE
      SYNTAX INTEGER (1..255)
      ACCESS read-only
      STATUS mandatory
      DESCRIPTION "<Definition> The Maximum Number of Special Functions this
            Actuated Controller Unit supports.
      <Object Identifier> 1.3.6.1.4.1.1206.4.2.1.3.13
      <Object Type> S
      <Unit> output"
::= { unit 13 }
```

### 5.4.14 Special Function Output Table

```
specialFunctionOutputTable   OBJECT-TYPE
      SYNTAX SEQUENCE OF SpecialFunctionOutputEntry
      ACCESS not-accessible
      STATUS mandatory
      DESCRIPTION "<Definition> A table containing Actuated Controller Unit
            special function output objects. The number of rows in this table
            is equal to the maxSpecialFunctionOutputs object.
      <TableType> static
      <Object Identifier> 1.3.6.1.4.1.1206.4.2.1.3.14"
::= { unit 14 }

specialFunctionOutputEntry   OBJECT-TYPE
      SYNTAX SpecialFunctionOutputEntry
      ACCESS not-accessible
      STATUS mandatory
      DESCRIPTION "<Definition> Control for  Actuated Controller Unit system
            special functions.
      <Object Identifier> 1.3.6.1.4.1.1206.4.2.1.3.14.1"
      INDEX   { specialFunctionOutputNumber }
::= { specialFunctionOutputTable 1 }

SpecialFunctionOutputEntry ::= SEQUENCE {
      specialFunctionOutputNumber   INTEGER,
      specialFunctionOutputState    INTEGER, -- deprecated
      specialFunctionOutputControl  INTEGER,
      specialFunctionOutputStatus   INTEGER }
```

#### 5.4.14.1 Special Function Output Number

```
specialFunctionOutputNumber   OBJECT-TYPE
      SYNTAX INTEGER (1..255)
      ACCESS read-only
      STATUS mandatory
      DESCRIPTION "<Definition> The special function output number associated
            with object in this row. This value shall not exceed the
            maxSpecialFunctionOutputs object value.
      <Object Identifier> 1.3.6.1.4.1.1206.4.2.1.3.14.1.1
      <Object Type> S
      <Unit> output"
::= { specialFunctionOutputEntry 1 }
```

 © 2023 AASHTO / ITE / NEMA

#### 5.4.14.2 Special Function Output State

```
specialFunctionOutputState   OBJECT-TYPE
      SYNTAX INTEGER (0..1)
      ACCESS read-write
      STATUS deprecated
      DESCRIPTION "<Definition> The special function output (logical or
            physical) on the device may be controlled by this object. When
            this object is non-zero then the associated special function
            output signal shall be ON. When this object is zero then the
            associated special function output signal shall be OFF A read of
            this object shall reflect the current state of the special
            function output.
      <Object Identifier> 1.3.6.1.4.1.1206.4.2.1.3.14.1.2"
::= { specialFunctionOutputEntry  2 }
```

#### 5.4.14.3 Special Function Output Control

```
specialFunctionOutputControl   OBJECT-TYPE
      SYNTAX INTEGER (0..1)
      ACCESS read-write
      STATUS mandatory
      DESCRIPTION "<Definition> The special function output (logical or
            physical) in the device may be controlled by this object. 0 = OFF
            & 1 = ON. The device shall reset this object to ZERO when in
            BACKUP Mode. A write to this object shall reset the BACKUP timer
            (see unitBackupTime).
      <Object Identifier> 1.3.6.1.4.1.1206.4.2.1.3.14.1.3
      <Object Type> P"
::= { specialFunctionOutputEntry  3 }
```

#### 5.4.14.4 Special Function Output Status

```
specialFunctionOutputStatus OBJECT-TYPE
      SYNTAX INTEGER (0..1)
      ACCESS read-only
      STATUS mandatory
      DESCRIPTION "<Definition> The current status (ON-OFF) of the special
            function output (logical or physical) in the device. 0 = OFF & 1
            = ON.
      <Object Identifier> 1.3.6.1.4.1.1206.4.2.1.3.14.1.4
      <Object Type> S"
::= { specialFunctionOutputEntry  4 }
```

### 5.4.15 Remote Manual Control Timer

```
unitMCETimeout    OBJECT-TYPE
      SYNTAX      INTEGER     (0..255)
      ACCESS      read-write
      STATUS      mandatory
      DESCRIPTION "<Definition> This object performs two functions. First, it
            enables manual operation the same as the MCE controller input.
            Second, it serves as a timeout value for a failsafe. If the value
            is non-zero, remote manual control is enabled. When a SET to this
            object is performed, the controller shall load the value into a
            timer that decrements once per second. If the timer reaches zero
            or if the object is SET to zero by the management station, the
```

© 2023 AASHTO / ITE / NEMA Copy Per MIB Distribution Permission

```
            controller shall automatically disable remote manual control.
            This forces the management station to continually refresh this
            timer to maintain remote manual operation. When in remote manual
            mode, the controller should respond exactly as if the MCE input
            was active.
      <Object Identifier> 1.3.6.1.4.1.1206.4.2.1.3.15
      <Object Type> C"
::= { unit 15 }
```

### 5.4.16 Remote Manual Control Advance Command

```
unitMCEIntAdv     OBJECT-TYPE
      SYNTAX      INTEGER     (0..1)
      ACCESS      read-write
      STATUS      mandatory
      DESCRIPTION "<Definition> This objects acts as a remote interval
            advance function. When SET to 1, the controller will behave as if
            the Interval Advance input (a.k.a. police 'pickle') was toggled.
            When remote manual control mode is enabled (see unitMCETimeout)
            the controller shall advance to the next interval and reset the
            value of this object to 0. If this object is SET to 1 when the
            controller is not in remote manual control mode, the controller
            shall return an error of 3 (bad value).
      <Object Identifier> 1.3.6.1.4.1.1206.4.2.1.3.16
      <Object Type> C"
::= { unit 16 }
```

### 5.4.17 ASC Elevation—Antenna Offset

```
ascElevationOffset OBJECT-TYPE
      SYNTAX      INTEGER (0..31)
      ACCESS      read-write
      STATUS      mandatory
      DESCRIPTION "<Definition> The offset in height, in meters, from the
            antenna of a GNSS or similar geopositioning device to the base of
            CU cabinet. It is assumed that the antenna is at a height higher
            than the base of the CU structure.
      <Valid Value Rule>Values of 0 to 30 provides a range from 0 meters to
            30 meters. The value of 31 represents unknown.
      <Object Identifier> 1.3.6.1.4.1.1206.4.2.1.3.17
      <Object Type> P
      <Unit> meters"
      DEFVAL { 31 }
::=   { unit 17 }
```

### 5.4.18 Startup Flash Mode

```
unitStartUpFlashMode   OBJECT-TYPE
      SYNTAX   INTEGER { autoFlash (1),
                  allRedFlashOverride (2),
                  allRedControllerFlash (3) }
      ACCESS   read-write
      STATUS   mandatory
      DESCRIPTION "<Definition> Defines the startup flash state for the unit.
            For autoFlash (1), the startup flash state for each signal
            indication is also the state of the channel during Automatic
```

 © 2023 AASHTO / ITE / NEMA

```
            Flash mode. For allRedFlashOverride (2), during the Start-Up
            Flash state, the Fault Monitor and Voltage Monitor outputs shall
            be inactive (if present) and the Channel Flash settings shall be
            overridden. For allRedControllerFlash(3), the load switch flash
            would flash all red regardless of the auto flash channel
            configuration.
      <Object Type> P
      <Object Identifier> 1.3.6.1.4.1.1206.4.2.1.3.18"
      DEFVAL { autoFlash }
::= { unit 18 }
```

### 5.4.19 Backup Timer Parameter—User Defined

```
unitUserDefinedBackupTime   OBJECT-TYPE
      SYNTAX   INTEGER (0..16777216)
      ACCESS   read-write
      STATUS   mandatory
      DESCRIPTION "<Definition> The Backup Time in seconds (0-16777216 sec)
            in 1-second increments. When any of the user-defined system
            control parameters is SET, the user-defined backup timer is
            reset. After reset, the CU times the unitUserDefinedBackupTime
            period. If the  unitUserDefinedBackupTime period expires without
            a SET operation to any of the user-defined control parameters
            defined in unitUserDefinedBackupTimeContent, then the CU reverts
            to Backup Mode.
            A value of zero (0) for this object shall disable this feature.
            If the value of this object is non-zero, then all functionality
            related to unitBackupTime is diabled.
      <Object Identifier> 1.3.6.1.4.1.1206.4.2.1.3.19
      <Object Type> P
      <Unit> second"
      DEFVAL {300}
::= { unit 19 }
```

### 5.4.20 Maximum Number of User Definable OIDs for Backup Timer

```
maxUserDefinedBackupTimeContent   OBJECT-TYPE
      SYNTAX INTEGER (2..255)
      ACCESS read-only
      STATUS mandatory
      DESCRIPTION  "<Definition> The Maximum Number of user content backup
            time contents this controller supports. This object indicates the
            maximum rows which shall appear in the
            unitUserDefinedBackupTimeContentTable object.
      <Object Identifier> 1.3.6.1.4.1.1206.4.2.1.3.20
      <Object Type> S
      <Unit> phase"
::= { unit 20 }
```

### 5.4.21 Backup Time—User Defined Functions Table

```
unitUserDefinedBackupTimeContentTable   OBJECT-TYPE
      SYNTAX   SEQUENCE OF UnitUserDefinedBackupTimeContentEntry
      ACCESS   not-accessible
      STATUS   mandatory
```

© 2023 AASHTO / ITE / NEMA Copy Per MIB Distribution Permission

```
      DESCRIPTION "<Definition> A table containing the parameters of the user
            defined parameters for the backup timer.
      <TableType> static
      <Object Identifier> 1.3.6.1.4.1.1206.4.2.1.3.21"
::= { unit 21 }

unitUserDefinedBackupTimeContentEntry   OBJECT-TYPE
      SYNTAX   UnitUserDefinedBackupTimeContentEntry
      ACCESS   not-accessible
      STATUS   mandatory
      DESCRIPTION "<Definition> Parameters for a user-defined backup timer.
      <Object Identifier> 1.3.6.1.4.1.1206.4.2.1.3.21.1"
      INDEX   { unitUserDefinedBackupTimeContentNumber }
::= { unitUserDefinedBackupTimeContentTable 1 }

UnitUserDefinedBackupTimeContentEntry ::= SEQUENCE {
      unitUserDefinedBackupTimeContentNumber        INTEGER,
      unitUserDefinedBackupTimeContentOID           OBJECT IDENTIFIER,
      unitUserDefinedBackupTimeContentDescription   OCTET STRING }
```

#### 5.4.21.1 Backup Time—User Defined Number

```
unitUserDefinedBackupTimeContentNumber   OBJECT-TYPE
      SYNTAX      INTEGER (1..65535)
      ACCESS      read-only
      STATUS      mandatory
      DESCRIPTION "<Definition> A userDefinedBackupTimeContent number for
            objects in this row. The value shall not exceed
            maxUserDefinedBackupTimeContents object value.
      <Object Identifier> 1.3.6.1.4.1.1206.4.2.1.3.21.1.1
      <Object Type> S
      <Unit> number"
::= { unitUserDefinedBackupTimeContentEntry 1 }
```

#### 5.4.21.2 Backup Time—User Defined OID

```
unitUserDefinedBackupTimeContentOID   OBJECT-TYPE
      SYNTAX   OBJECT IDENTIFIER
      ACCESS   read-write
      STATUS   mandatory
      DESCRIPTION "<Definition> This object contains a reference to the
            function, which, if any SET operation is  performed on it, leads
            to a reset of the timer associated with the
            unitUserDefinedbackupTime object. This object shall reference the
            function by its associated identifier including its instance
            (i.e., the full OID of the scalar or columnar object).
      <Object Identifier> 1.3.6.1.4.1.1206.4.2.1.3.21.1.2
      <Object Type> P"
::= { unitUserDefinedBackupTimeContentEntry 2 }
```

#### 5.4.21.3 Backup Time—User Defined Content Description

```
unitUserDefinedBackupTimeContentDescription   OBJECT-TYPE
      SYNTAX   OCTET STRING
      ACCESS   read-write
      STATUS   mandatory
```

 © 2023 AASHTO / ITE / NEMA

```
      DESCRIPTION "<Definition> Contains a text description of the referenced
            function that, if performing a SET command against its
            corresponding object, will reset the timer associated with the
            unitUserDefinedBackupTime object.
      <Object Identifier> 1.3.6.1.4.1.1206.4.2.1.3.21.1.3
      <Object Type> P"
      DEFVAL { "" }
::= { unitUserDefinedBackupTimeContentEntry 3 }
```

#### 5.4.22 ASC Clock

```
ascClock OBJECT IDENTIFIER
::= { unit 22 }

-- This note contains the objects necessary to support time sources.
```

##### 5.4.22.1 Maximum Number of Time Sources

```
maxTimeSources    OBJECT-TYPE
      SYNTAX   INTEGER (1..255)
      ACCESS      read-only
      STATUS      mandatory
      DESCRIPTION "<Definition> The maximum number of time sources that this
            Controller Unit supports. This object indicates the maximum rows
            which shall appear in the unitTimeTable object.
      <Object Identifier> 1.3.6.1.4.1.1206.4.2.1.3.22.1
      <Object Type> S
      <Unit> timeSource"
::= { ascClock 1 }
```

##### 5.4.22.2 Unit Time Source Table

```
unitTimeTable OBJECT-TYPE
      SYNTAX SEQUENCE OF UnitTimeEntry
      ACCESS not-accessible
      STATUS mandatory
      DESCRIPTION "<Definition> A table containing Controller Unit time
            sources. The number of rows in this table is equal to the
            maxTimeSources object.
      <TableType> static
      <Object Identifier> 1.3.6.1.4.1.1206.4.2.1.3.22.2"
::= { ascClock 2 }

unitTimeEntry OBJECT-TYPE
      SYNTAX UnitTimeEntry
      ACCESS not-accessible
      STATUS mandatory
      DESCRIPTION "<Definition> Parameters for a specific Controller Unit
            time source.
      <Object Identifier> 1.3.6.1.4.1.1206.4.2.1.3.22.2.1"
      INDEX { unitTimeIndex }
::= { unitTimeTable 1 }

UnitTimeEntry ::= SEQUENCE {
      unitTimeIndex     INTEGER,
      unitTimeSourceAvailable INTEGER }
```

© 2023 AASHTO / ITE / NEMA Copy Per MIB Distribution Permission

#### 5.4.22.2.1 Unit Time Source Index

```
unitTimeIndex OBJECT-TYPE
      SYNTAX INTEGER (1..255)
      ACCESS read-only
      STATUS mandatory
      DESCRIPTION "<Definition> The index number for objects in this row. The
            value shall not exceed the maxTimeSources object value.
      <Object Identifier> 1.3.6.1.4.1.1206.4.2.1.3.22.2.1.1
      <Object Type> S
      <Unit> timeSource"
::= { unitTimeEntry 1 }
```

#### 5.4.22.2.2 Unit Time Source

```
unitTimeSourceAvailable   OBJECT-TYPE
      SYNTAX   INTEGER { other (1),
            lineSync (2),
            rtcSqwr (3),
            crystal (4),
            gnss (5),
            ntp (6) }
      ACCESS      read-only
      STATUS      mandatory
      DESCRIPTION "<Definition> An enumerated value representing the
            available sources for adjusting the clock. This object sets up
            the clock sources available for use by the CU.
            other: the source of the unit time is not defined by this
                  standard.
            lineSync: the source of the unit time is determined by tracking
                  the (AC) power line frequency
            rtcSqwr: the source of the unit time a Real Time Clock Square
                  Wave output
            crystal: the source of the unit time is the internal crystal.
                  This might also be used if the unit time normally uses line
                  frequency but appears to be drifting too much as might
                  happen when on a power generator.
            gnss: a GNSS device is being used to update the unit's internal
                  reference on a frequent basis (e.g., once per minute))
            ntp: the network time protocol (NTP) is being used to update the
                  unit's internal reference
      <Object Identifier> 1.3.6.1.4.1.1206.4.2.1.3.22.2.1.2
      <Object Type> S"
      DEFVAL { lineSync }
::= { unitTimeEntry 2 }
```

#### 5.4.22.3 ASC Clock Source—Commanded

```
unitTimeSourceCommanded   OBJECT-TYPE
      SYNTAX   INTEGER { other (1),
            lineSync (2),
            rtcSqwr (3),
            crystal (4),
            gnss (5),
            ntp (6) }
```

 © 2023 AASHTO / ITE / NEMA

```
      ACCESS      read-write
      STATUS      mandatory
      DESCRIPTION "<Definition>  Commands the unit to the primary source for
            adjusting the unit clock:
            other: the source of the unit time is not defined by this
                  standard.
            lineSync: the source of the unit time is determined by tracking
                  the (AC) power line frequency
            rtcSqwr: the source of the unit time a Real Time Clock Square
                  Wave output
            crystal: the source of the unit time is the internal crystal.
                  This might also be used if the unit time normally uses line
                  frequency but appears to be drifting too much as might
                  happen when on a power generator.
            gnss: a GNSS device is being used to update the unit's internal
                  reference on a frequent basis (e.g., once per minute))
            ntp: the network time protocol (NTP) is being used to update the
                  unit's internal reference
      <Object Identifier> 1.3.6.1.4.1.1206.4.2.1.3.22.3
      <Object Type> P"
      DEFVAL { lineSync }
::= { ascClock 3 }
```

#### 5.4.22.4 ASC Clock Source—Current

```
unitTimeSourceCurrent   OBJECT-TYPE
      SYNTAX   INTEGER { other (1),
            lineSync (2),
            rtcSqwr (3),
            crystal (4),
            gnss (5),
            ntp (6) }
      ACCESS      read-only
      STATUS      mandatory
      DESCRIPTION "<Definition> An enumerated value representing the current
            source for adjusting the unit clock as follows:
            other: the source of the unit time is not defined by this
                  standard.
            lineSync: the source of the unit time is determined by tracking
                  the (AC) power line frequency
            rtcSqwr: the source of the unit time is a Real Time Clock Square
                  Wave output
            crystal: the source of the unit time is the internal crystal.
                  This might also be used if the unit time normally uses line
                  frequency but appears to be drifting too much as might
                  happen when on a power generator.
            gnss: a GNSS device is being used to update the unit's internal
                  reference on a frequent basis (e.g., once per minute))
            ntp: the network time protocol (NTP) is being used to update the
                  unit's internal reference
      <Object Identifier> 1.3.6.1.4.1.1206.4.2.1.3.22.4
      <Object Type> S"
      DEFVAL { lineSync }
::= { ascClock 4 }
```

© 2023 AASHTO / ITE / NEMA 

#### 5.4.22.5 Unit Time Source Status

```
unitTimeSourceStatus OBJECT-TYPE
      SYNTAX      INTEGER {   notActive (1),
            active (2),
            dataError (3),
            dataTimeOutError (4),
            pendingUpdate (5),
            nonSequential (6) }
      ACCESS      read-only
      STATUS      mandatory
      DESCRIPTION "<Definition>  An enumerated value representing the status
            of the current unit clock source (unitTimeSourceCurrent).
            notActive: The unit is not monitoring this clock source, or
            updates are not available.
            active: The unit is receiving valid updates and is updating the
                  controller time without errors.
            dataError: A data error, such as a crc mismatch, was detected.
            dataTimeoutError: No data has been received from the
                  unitTimeSourceCurrent within a reasonable amount of time.
                  This timeout will be preset by the driver for this time
                  source as it depends on the specific implementation.
            pendingUpdate: The unit is pending an update from the
                  unitTimeSourceCurrent, such as when the controller is in
                  the startup period and is waiting for the external device
                  to sync to its reference and send the time to the unit.
            nonSequential: A non-sequential clock change occurrence. Note
                  this value should be cleared upon reading it (i.e., a GET
                  on this object) or 10 seconds after its occurrence,
                  whichever comes first.
      <Object Identifier> 1.3.6.1.4.1.1206.4.2.1.3.22.5
      <Object Type> S"
::= { ascClock 5 }
```

#### 5.4.22.6 ASC Clock Non-Sequential Time Source

```
unitTimeNonSequentialSource OBJECT-TYPE
      SYNTAX INTEGER { unknown (1),
            dstChange (2),
            managementStation (3),
            localUser (4),
            timeSourceChange (5),
            timeSourceDiscontinuity (6) }
      ACCESS read-only
      STATUS mandatory
      DESCRIPTION "<Definition> An enumerated value that indicates the source
            of a non-sequential change to the ASC clock time. A non-
            sequential change occurs anytime the clock changes by more than 1
            increment (whether in seconds or milliseconds).
            unknown: the source of the non-sequential change to the unit time
                  is unknown or cannot be determined.
            dstChange: the source of the non-sequential change to the unit
                  time is a change in daytime savings time.
            managementStation: the source of the non-sequential change to the
                  unit time is a command from a management station.
```

 © 2023 AASHTO / ITE / NEMA

```
            localUser: the source of the non-sequential change to the unit
                  time is a command from a user or device at the controller
                  unit.
            timeSourceChange: A change in the time source (e.g., external1)
            timeSourceDiscontinuity: A change as determined by an external
                  time source (e.g., GNSS).
            The value is latched until another non-sequential change to the
                  ASC clock time or until the ASC is powered off.
            If a non-sequential change occurs or globalTime is SET, then the
                  event should be logged. This object is used with the
                  unitTimeNonSequentialChange and the
                  unitTimeNonSequentialDelta objects.
      <Object Identifier> 1.3.6.1.4.1.1206.4.2.1.3.22.6
      <Object Type> S"
      DEFVAL { unknown }
::= { ascClock 6 }
```

#### 5.4.22.7 ASC Clock Non-Sequential Time Change

```
unitTimeNonSequentialChange OBJECT-TYPE
      SYNTAX Counter
      ACCESS read-only
      STATUS mandatory
      DESCRIPTION "<Definition> The 'new' globalTime after a non-sequential
            change to the ASC clock time. A non-sequential change occurs
            anytime the clock changes by more than 1 increment (whether in
            seconds or milliseconds). The value of this object is number of
            seconds since the epoch of 00:00:00 (midnight) January 1, 1970
            UTC (a.k.a. Zulu or GMT).
      <Object Identifier> 1.3.6.1.4.1.1206.4.2.1.3.22.7
      <Object Type> S
      <Unit> second"
      DEFVAL { 0 }
::= { ascClock 7 }
```

#### 5.4.22.8 ASC Clock Non-Sequential Time Difference

```
unitTimeNonSequentialDelta OBJECT-TYPE
      SYNTAX OCTET STRING (SIZE(0 | 5))
      ACCESS read-only
      STATUS mandatory
      DESCRIPTION
      "<Definition> An octet string indicating the difference between the
            'expected' time and the new time for the ASC clock after a non-
            sequential change to the ASC clock. A non-sequential change
            occurs anytime the clock changes by more than 1 increment
            (whether in seconds or milliseconds). A positive value indicates
            time jumped ahead while a negative value indicates time jumped
            back. The first octet is from -23 to +23 hours, the second octet
            is in minutes, the third octet represents seconds, and the last
            two octets represents milliseconds.
            This object is used with the unitTimeNonSequentialSource and the
            unitTimeNonSequentialChange objects.
      <Object Identifier> 1.3.6.1.4.1.1206.4.2.1.3.22.8
      <Object Type> S"
      DEFVAL { "" }
::= { ascClock 8 }
```

© 2023 AASHTO / ITE / NEMA 

### 5.4.23 Communications

```
commPorts OBJECT IDENTIFIER
::= { unit 23 }

-- This node shall contain objects that configure, monitor or
-- control communications ports functions for this device.
```

#### 5.4.23.1 Maximum Communications Ports

```
maxCommPorts   OBJECT-TYPE
      SYNTAX   INTEGER (1..16)
      ACCESS   read-only
      STATUS   mandatory
      DESCRIPTION "<Definition> The Maximum Number of communications Ports
            this device supports and is the maximum value of ifNumber
            allowed.
      <Object Identifier> 1.3.6.1.4.1.1206.4.2.1.3.23.1
      <Object Type> S
      <Unit> commPorts"
::= { commPorts 1 }
```

#### 5.4.23.2 Communications Ports Table

```
commPortTable   OBJECT-TYPE
      SYNTAX   SEQUENCE OF CommPortsEntry
      ACCESS   not-accessible
      STATUS   mandatory
      DESCRIPTION "<Definition> A table used to describe and configure the
            communication ports on the CU. The number of rows in this table
            is equal to the maxCommPorts object.
      <TableType> static
      <Object Identifier> 1.3.6.1.4.1.1206.4.2.1.3.23.2"
::= { commPorts 2 }

commPortsEntry   OBJECT-TYPE
      SYNTAX   CommPortsEntry
      ACCESS   not-accessible
      STATUS   mandatory
      DESCRIPTION "<Definition> This object defines a row in the
            Communication Ports Table which is used to extend the ifTable of
            RFC 1213. It uses ifIndex from RFC 1213 as the index, so all
            communications ports in the controller has to be included in the
            ifTable including async RS232 ports which are also in the
            rs232PortTable.
      <Object Identifier> 1.3.6.1.4.1.1206.4.2.1.3.23.2.1"
      INDEX   { ifIndex }
::= { commPortTable 1 }

CommPortsEntry ::= SEQUENCE {
      commPortType                        INTEGER,
      commPortTypeIndex                   INTEGER,
      commPortEnable                      INTEGER,
      commPortProtocolsSupported          INTEGER,
      commPortProtocol                    INTEGER,
```

 © 2023 AASHTO / ITE / NEMA

```
      commPortDiagnostics                INTEGER }
```

#### 5.4.23.2.1 Communications Port Type

```
commPortType   OBJECT-TYPE
      SYNTAX   INTEGER { other (1),
            ethernet (2),
            rs232like (3) }
      ACCESS   read-only
      STATUS   mandatory
      DESCRIPTION "<Definition> This object identifies the port type.
            Although RFC 1213 contains ifType, this object provides the
            user/device further guidance to additional objects that define
            the port and its configuration. The valid port types are defined
            as follows:
            other: the port type is not defined by this standard.
            Ethernet: the port type is Ethernet based (i.e. IP) and
            configured per NTCIP 2104 and 2202
            rs232like: the port type is rs-232-like (per RFC 1317) and may be
            either an asynchronous or synchronous serial. Port configuration
            is contained in RFC 1317 rs232PortTable
      <Object Identifier> 1.3.6.1.4.1.1206.4.2.1.3.23.2.1.1
      <Object Type> S"
::= { commPortsEntry 1 }
```

#### 5.4.23.2.2 Communications Port Type Number Parameter

```
commPortTypeIndex  OBJECT-TYPE
      SYNTAX  INTEGER
      ACCESS  read-write
      STATUS  mandatory
      DESCRIPTION "<Definition> This object contains the value to be used as
            the index into the appropriate communication port configuration
            table. If commPortType = rs232like, then this value is used for
            RFC 1317 rs232PortIndex into the rs232PortTable. If commPortType
            is ethernet then this object is redundant and should have the
            same value as ifIndex.
      <Object Identifier> 1.3.6.1.4.1.1206.4.2.1.3.23.2.1.2
      <Object Type> S"
::= { commPortsEntry 2 }
```

#### 5.4.23.2.3 Communications Port Enable

```
commPortEnable   OBJECT-TYPE
      SYNTAX   INTEGER { enabled (1),
            disabled (2) }
      ACCESS   read-write
      STATUS   mandatory
      DESCRIPTION "<Definition> This object is used to enable/disable a
            communications port on the device unless prohibited by the
            hardware specification or hardware standard. Unused
            communications port numbers shall be set to disabled (2), and by
            default, all available communications ports shall be disabled. A
            GET of this object returns the current state of the port.
```

© 2023 AASHTO / ITE / NEMA Copy Per MIB Distribution Permission

```
            Note that the device may include other means to disable a
            communications port (e.g. Port 1 Disable input). Attempting to
            enable a port that is disabled by these other means will fail and
            a subsequent GET of this object will indicate that the port is
            still disabled.
      <Object Identifier> 1.3.6.1.4.1.1206.4.2.1.3.23.2.1.3
      <Object Type> C"
::= { commPortsEntry 3 }
```

#### 5.4.23.2.4 Communications Port Protocol Supported

```
commPortProtocolsSupported   OBJECT-TYPE
      SYNTAX   INTEGER (0..4294967295)
      ACCESS   read-only
      STATUS   mandatory
      DESCRIPTION "<Definition> This object identifies the protocols
            supported by the port. If a protocol is supported on the port,
            then the bit is set to 1, otherwise the bit is set to zero (0).
            Bits 6 - 31: Reserved
            Bit 5: Console
            Bit 4: Serial Bus #3
            Bit 3: Serial Bus #1
            Bit 2: Port 1
            Bit 1: NTCIP
            Bit 0: Other protocol not defined in this standard
            A SET of a 'reserved' bit to a value other than zero (0) shall
            return a badValue(3) error.
      <Object Identifier> 1.3.6.1.4.1.1206.4.2.1.3.23.2.1.4
      <Object Type> S"
::= { commPortsEntry 4 }
```

#### 5.4.23.2.5 Communications Port Protocol

```
commPortProtocol  OBJECT-TYPE
      SYNTAX  INTEGER (0..32)
      ACCESS  read-write
      STATUS  mandatory
      DESCRIPTION "<Definition> This object specifies the protocol to be used
            on the communication port. If the port is disabled by means other
            than commPortEnable or has not yet been initialized, then the
            protocol shall be zero (0); otherwise the value shall be set to
            n+1 where n is the bit number within commPortProtocolsSupported
            of the protocol desired. Note that one can only choose from the
            set of protocols supported on that port; all other values will
            return a badValue response.
      <Object Identifier> 1.3.6.1.4.1.1206.4.2.1.3.23.2.1.5
      <Object Type> P"
::= { commPortsEntry 5 }
```

#### 5.4.23.2.6 Communications Port Diagnostics

```
commPortDiagnostics   OBJECT-TYPE
      SYNTAX  INTEGER { normal (1),
            loopback (2),
            echomode (3) }
      ACCESS   read-write
```

 © 2023 AASHTO / ITE / NEMA

```
      STATUS   mandatory
      DESCRIPTION "<Definition> This object specifies the port diagnostic
            commands for a communication port. It works in conjunction with
            ifOperStatus and ifAdminStatus from RFC 1213. Setting this object
            to loopback or echomode will result in ifAdminStatus being set to
            'testing' and if successful the device will update ifOperStatus
            to testing. When ifAdminStatus is set to either 'up' or 'down',
            if successful the device will update ifOperStatus accordingly and
            set this object to 'normal'. One cannot directly set this object
            to 'normal'.

            Note that a user can enable/disable each communications port on
            the  device unless prohibited by the PRL or hardware
            standard/specification. Unused communications port numbers shall
            be set to disabled ('down'), and by default, all available
            communications ports shall be enabled.

            Note that the device may include other means to disable a
            communications port (e.g. Port 1 Disable input). Attempting to
            enable a port that is disabled by these other means will fail and
            a subsequent GET of this object will indicate that the port is
            still disabled.
      <Object Identifier> 1.3.6.1.4.1.1206.4.2.1.3.23.2.1.6
      <Object Type> P"
::= { commPortsEntry 6 }
```

#### 5.4.23.3 Maximum Ethernet Ports

```
maxEthernetPorts   OBJECT-TYPE
      SYNTAX   INTEGER (1..255)
      ACCESS   read-only
      STATUS   mandatory
      DESCRIPTION  "<Definition> The Maximum Number of Ethernet
            communications ports this device supports. This object indicates
            the maximum rows which shall appear in the ethernetConfigTable
            object.
      <Object Identifier> 1.3.6.1.4.1.1206.4.2.1.3.23.3
      <Object Type> S
      <Unit> ethernetPorts"
::= { commPorts 3 }
```

#### 5.4.23.4 Ethernet Port Configuration Table

```
ethernetConfigTable  OBJECT-TYPE
      SYNTAX  SEQUENCE OF EthernetConfigEntry
      ACCESS  not-accessible
      STATUS  mandatory
      DESCRIPTION "<Definition> This table extends configurations for the
            Ethernet ports on the device by providing objects that extend
            standard configuration tables such as those contained in RFC
            1213.
            The number of rows in this table is equal to the maxEthernetPorts
            object. This table only contains rows for communication ports
            with commPortType = ethernet (2).
            Note that the Ethernet port's MAC address can be found via the
            ifPhysAddress object in the ifTable at the same value of ifIndex.
      <TableType> static
```

© 2023 AASHTO / ITE / NEMA Copy Per MIB Distribution Permission

```
      <Object Identifier> 1.3.6.1.4.1.1206.4.2.1.3.23.4"
::= { commPorts 4 }

ethernetConfigEntry  OBJECT-TYPE
      SYNTAX  EthernetConfigEntry
      ACCESS  not-accessible
      STATUS  mandatory
      DESCRIPTION "<Definition> This object defines a row in the Ethernet
            Port Configuration Table.
      <Object Identifier> 1.3.6.1.4.1.1206.4.2.1.3.23.4.1"
      INDEX { ifIndex }
::= { ethernetConfigTable  1 }

EthernetConfigEntry ::= SEQUENCE {
      ecfgIpAddr        IpAddress,
      ecfgNetMask       IpAddress,
      ecfgGateway       IpAddress,
      ecfgDNS           IpAddress,
      ecfgMode          INTEGER,
      ecfgLogicalName   OCTET STRING,
      ecfgStaticIpAddr    IpAddress,
      ecfgStaticNetMask   IpAddress,
      ecfgStaticGateway   IpAddress,
      ecfgStaticDNS       IpAddress }
```

#### 5.4.23.4.1 IP Address Parameter

```
ecfgIpAddr OBJECT-TYPE
      SYNTAX  IpAddress
      ACCESS  read-only
      STATUS  mandatory
      DESCRIPTION "<Definition> This object contains the IP address of this
            logical Ethernet Port.
      <Object Identifier> 1.3.6.1.4.1.1206.4.2.1.3.23.4.1.1
      <Object Type> S"
::= { ethernetConfigEntry 1 }
```

#### 5.4.23.4.2 Net Mask Parameter

```
ecfgNetMask OBJECT-TYPE
      SYNTAX  IpAddress
      ACCESS  read-only
      STATUS  mandatory
      DESCRIPTION "<Definition> This object contains the network mask for
            this Ethernet Port.
      <Object Identifier> 1.3.6.1.4.1.1206.4.2.1.3.23.4.1.2
      <Object Type> S"
::= { ethernetConfigEntry 2 }
```

#### 5.4.23.4.3 Gateway Parameter

```
ecfgGateway OBJECT-TYPE
      SYNTAX  IpAddress
      ACCESS  read-only
      STATUS  mandatory
```

 © 2023 AASHTO / ITE / NEMA

```
      DESCRIPTION "<Definition> This object contains the gateway IP address
            for this Ethernet Port.
      <Object Identifier> 1.3.6.1.4.1.1206.4.2.1.3.23.4.1.3
      <Object Type> S"
::= { ethernetConfigEntry 3 }
```

#### 5.4.23.4.4 Domain Name Server Parameter

```
ecfgDNS OBJECT-TYPE
      SYNTAX  IpAddress
      ACCESS  read-only
      STATUS  mandatory
      DESCRIPTION "<Definition> This object contains the domain name server
            IP address for this Ethernet Port.
      <Object Identifier> 1.3.6.1.4.1.1206.4.2.1.3.23.4.1.4
      <Object Type> S"
::= { ethernetConfigEntry 4 }
```

#### 5.4.23.4.5 Ethernet Configuration Mode Parameter

```
ecfgMode OBJECT-TYPE
      SYNTAX  INTEGER { other (1),
                  static (2),
                  dHCPclient (3)  }
      ACCESS  read-write
      STATUS  mandatory
      DESCRIPTION "<Definition> This object determines how the IPv4 interface
            is configured:
            other: the interface is configured with some other mechanism not
            defined by this standard
            static: the interface is configured using the static values in
            this table
            dHCPclient: the interface is configured via DHCP request
      <Object Identifier> 1.3.6.1.4.1.1206.4.2.1.3.23.4.1.5
      <Object Type> P"
::= { ethernetConfigEntry 5 }
```

#### 5.4.23.4.6 DHCP Logical Name Parameter

```
ecfgLogicalName OBJECT-TYPE
      SYNTAX  OCTET STRING
      ACCESS  read-write
      STATUS  mandatory
      DESCRIPTION "<Definition> This object contains the Logical Name used
            for this port if DHCP client is enabled. If DHCP client is
            disabled then this object contains the last Logical Name used for
            this port (if none, then the object would be a zero length octet
            string).
      <Object Identifier> 1.3.6.1.4.1.1206.4.2.1.3.23.4.1.6
      <Object Type> P"
::= { ethernetConfigEntry 6 }
```

#### 5.4.23.4.7 Static IP Address Parameter

```
ecfgStaticIpAddr OBJECT-TYPE
      SYNTAX  IpAddress
```

© 2023 AASHTO / ITE / NEMA Copy Per MIB Distribution Permission

```
      ACCESS  read-write
      STATUS  mandatory
      DESCRIPTION "<Definition> This object contains the IP address to be
            used for  this logical Ethernet Port if the ecfgMode object is
            static (2).
      <Object Identifier> 1.3.6.1.4.1.1206.4.2.1.3.23.4.1.7"
::= { ethernetConfigEntry 7 }
```

#### 5.4.23.4.8 Static Net Mask Parameter

```
ecfgStaticNetMask OBJECT-TYPE
      SYNTAX  IpAddress
      ACCESS  read-write
      STATUS  mandatory
      DESCRIPTION "<Definition> This object contains the network mask to be
            used for this Ethernet Port if the ecfgMode object is static (2).
      <Object Identifier> 1.3.6.1.4.1.1206.4.2.1.3.23.4.1.8
      <Object Type> P"
::= { ethernetConfigEntry 8 }
```

#### 5.4.23.4.9 Static Gateway Parameter

```
ecfgStaticGateway OBJECT-TYPE
      SYNTAX  IpAddress
      ACCESS  read-write
      STATUS  mandatory
      DESCRIPTION "<Definition> This object contains the gateway IP address
            to be used for this Ethernet Port if the ecfgMode object is
            static (2).
      <Object Identifier> 1.3.6.1.4.1.1206.4.2.1.3.23.4.1.9
      <Object Type> P"
::= { ethernetConfigEntry 9 }
```

#### 5.4.23.4.10 Static Domain Name Server Parameter

```
ecfgStaticDNS OBJECT-TYPE
      SYNTAX  IpAddress
      ACCESS  read-write
      STATUS  mandatory
      DESCRIPTION "<Definition> This object contains the domain name server
            IP address to be used for this Ethernet Port if the ecfgMode
            object is static (2).
      <Object Identifier> 1.3.6.1.4.1.1206.4.2.1.3.23.4.1.10
      <Object Type> P"
::= { ethernetConfigEntry 10 }
```

### 5.4.23.5 Ethernet Communications Ports

```
-- To support the Ethernet protocol running at any of the
-- defined communications ports, the object definitions
-- contained in the following tables within
-- Annex I shall be supported:
--             SNMP Group
--             System Group
--             Interfaces Group
--             IP Group
```

 © 2023 AASHTO / ITE / NEMA

```
--             ICMP Group
--             TCP Group
--             UDP Group
--             Ethernet Group
-- See Annex I for object definitions to be supported.
```

#### 5.4.23.6 Asynchronous RS-232 Communications Ports

```
-- To support the asynchronous, serial protocol running at
-- any of the defined communications ports, the object
-- definitions contained in the following tables within
-- Annex I shall be supported:
--             SNMP Group
--             System Group
--             RS232 Group
--             HDLC Group
--             Interfaces Group
-- See Annex I for object definitions to be supported.
```

#### 5.4.23.7 Synchronous RS-232 Communications Ports

```
-- To support the synchronous, serial protocol running at
-- any of the defined communications ports, the object
-- definitions contained in the following tables within
-- Annex I shall be supported:
--             SNMP Group
--             System Group
--             RS232 Group
--             HDLC Group
--             Interfaces Group
-- See Annex I for object definitions to be supported.
```

#### 5.4.23.8 Port 1 Timeout Fault

```
port1TimeoutFault OBJECT-TYPE
   SYNTAX INTEGER (0..255)
   ACCESS read-only
   STATUS mandatory
      DESCRIPTION "<Definition> This object is the number of Port 1 Timeout
            Faults during the previous 24 hour period. CUs which do not
            support a Port 1 Timeout Fault shall report a value of 255. A
            value of 254 shall indicate 254 or more timeouts during the
            previous 24 hour period.
       <Object Identifier> 1.3.6.1.4.1.1206.4.2.1.3.23.8
      <Object Type> S"
      REFERENCE "NEMA TS 2 Section 4.4.6"
   DEFVAL  { 255 }
::= { commPorts 8 }
```

#### 5.4.23.9 Serial Bus 1 Fault

```
serialBus1Fault OBJECT-TYPE
   SYNTAX INTEGER (0..255)
   ACCESS read-only
   STATUS mandatory
```

© 2023 AASHTO / ITE / NEMA Copy Per MIB Distribution Permission

```
      DESCRIPTION "<Definition> This object is the number of Serial Bus 1
            timeout failures measured during the previous 24 hour period. CUs
            which do not support a Serial Bus 1 Timeout Failures shall report
            a value of 255. A value of 254 shall indicate 254 or more
            timeouts during the previous 24 hour period.
      <Object Identifier> 1.3.6.1.4.1.1206.4.2.1.3.23.9
      <Object Type> S"
      REFERENCE "ITS Cabinet Standard v01.02.17b Section 4.4.6.3.1."
      DEFVAL  { 255 }
::= { commPorts 9 }
```

### 5.4.24 Maximum Number of OIDs for Global Set ID Parameter

```
maxGlobalSetIds OBJECT-TYPE
      SYNTAX      INTEGER (0..65535)
      ACCESS      read-only
      STATUS      mandatory
      DESCRIPTION "<Definition> The maximum number of object identifiers that
            can be used to create the value of the globalSetIDParameter as
            supported by this CU.
      <Object Type> S
      <Object Identifier> 1.3.6.1.4.1.1206.4.2.1.3.24"
::=   { unit 24 }
```

### 5.4.25 Global Set ID Parameter Definition Table

```
globalSetIdTable  OBJECT-TYPE
      SYNTAX  SEQUENCE OF GlobalSetIdEntry
      ACCESS  not-accessible
      STATUS  mandatory
      DESCRIPTION "<Definition> This table contains the object identifiers
            used to create the globalSetIDParameter. The number of rows
            within this table shall not exceed the value of maxGlobalSetIds.
            If the rows within this table are defined, the OIDs shall be used
            in order, as indicated by the globalSetIdNumber, to create the
            value of the globalSetIDParameter object. The algorithm used to
            create the actual value of the globalSetIDParameter is not
            defined by this standard, but may be a CRC algorithm.
            If there are no rows defined within this table, then the value of
            the globalSetIDParameter object shall be created as defined in
            NTCIP 1201v03, Section 2.2.1.
      <TableType> static
      <Object Identifier> 1.3.6.1.4.1.1206.4.2.1.3.25"
::= { unit 25 }

globalSetIdEntry  OBJECT-TYPE
      SYNTAX  GlobalSetIdEntry
      ACCESS  not-accessible
      STATUS  mandatory
      DESCRIPTION "<Definition> This object defines a row in the
            globalSetIdTable.
      <Object Identifier> 1.3.6.1.4.1.1206.4.2.1.3.25.1"
      INDEX { globalSetIdNumber }
::= { globalSetIdTable  1 }

GlobalSetIdEntry ::= SEQUENCE {
      globalSetIdNumber INTEGER,
```

 © 2023 AASHTO / ITE / NEMA

```
      globalSetIdOID    OBJECT IDENTIFIER }
```

#### 5.4.25.1 Global Set ID Number

```
globalSetIdNumber OBJECT-TYPE
      SYNTAX INTEGER (1..65535)
      ACCESS read-only
      STATUS mandatory
      DESCRIPTION "<Definition> The global ID number for objects in this row.
            This value shall not exceed maxGlobalSetIds.
      <Object Identifier> 1.3.6.1.4.1.1206.4.2.1.3.25.1.1
      <Object Type> S"
::= { globalSetIdEntry 1 }
```

#### 5.4.25.2 Global Set ID Object Identifier

```
globalSetIdOID OBJECT-TYPE
      SYNTAX      OBJECT IDENTIFIER
      ACCESS read-write
      STATUS mandatory
      DESCRIPTION "<Definition> This object contains one of the object
            identifiers that are to be used to create the value of the
            globalSetIDParameter. A value of NULL indicates no further object
            identifiers will be used to determine the globalSetIDParameter
            (i.e., end of the list of object identifiers).
      <Object Identifier> 1.3.6.1.4.1.1206.4.2.1.3.25.1.2
      <Object Type> P"
::= { globalSetIdEntry 2 }
```

### 5.4.26 Unit Alarm Status 3

```
unitAlarmStatus3 OBJECT-TYPE
      SYNTAX INTEGER (0..255)
      ACCESS read-only
      STATUS mandatory
      DESCRIPTION
      "<Definition> Device Alarm Mask 3 ( 0 = False, 1 = True) as follows:
            Bit 7: Reserved
            Bit 6: Reserved
            Bit 5: CV Certificate = Whenever the CU detects a fault related
                  to invalid connected vehicle certificates.
            Bit 4: Power Issues = Whenever the CU detects power issues such
                  as brown-outs or brief black outs but do not lead to a
                  shutdown of the CU
            Bit 3: RSU Link Status = Whenever the CU is configured to
                  communicate with a RSU but the communications link is
                  failed (e.g., timeouts, errors).
            Bit 2: UPS Link Status = Whenever the CU is configured to
                  communicate with a UPS but the communications link is
                  failed (e.g., timeouts, errors).
            Bit 1: CMU Link Status = Whenever the CU is configured to
                  communicate with CMU but the communication link is failed
                  (e.g., timeouts, errors).
            Bit 0: Communications Timeout = Whenever the CU detects a
                  communications timeout on an enabled communications port on
                  the ASC.
```

© 2023 AASHTO / ITE / NEMA Copy Per MIB Distribution Permission

```
            Once set, a bit shall maintain its state as long as the condition
                  exists.
      <Object Identifier> 1.3.6.1.4.1.1206.4.2.1.3.26
      <Object Type> S"
::= { unit 26 }
```

#### 5.4.27 Unit Alarm Status 4

```
unitAlarmStatus4 OBJECT-TYPE
      SYNTAX INTEGER (0..255)
      ACCESS read-only
      STATUS mandatory
      DESCRIPTION
      "<Definition> Device Alarm Mask 4 ( 0 = False, 1 = True) as follows:
            Bit 7: Reserved
            Bit 6: Reserved
            Bit 5: USB = Whenever the CU detects a USB memory device.
            Bit 4: Scheduler = Whenever the CU is not implementing a
                  scheduled pattern or scheduled action.
            Bit 3: Clock = Whenever the CU detects an error with the CU's
                  internal clock.
            Bit 2: Cabinet Environmental Sensors = Whenever the cabinet
                  environmental conditions measured by the CU exceeds the
                  thresholds (e.g., temperature, humidity).
            Bit 1: Preempt Maximum Presence - Preempt maximum presence time
                  exceeded
            Bit 0: Memory Fault = Whenever the CU detects a memory fault
                  within the controller unit, such as in the firmware, a
                  database or RAM.
      <Object Identifier> 1.3.6.1.4.1.1206.4.2.1.3.27
      <Object Type> S"
::= { unit 27 }
```

### 5.5 Coordination Parameters

```
coord OBJECT IDENTIFIER
::= { asc 4 }

-- The coord node contains objects that support coordination
-- configuration, status and control functions for the device.
```

#### 5.5.1 Coord Operational Mode Parameter

```
coordOperationalMode   OBJECT-TYPE
      SYNTAX INTEGER (0..255)
      ACCESS read-write
      STATUS mandatory
      DESCRIPTION "<Definition> This object defines the operational mode for
            coordination. The possible modes are:
            Value DESCRIPTION
            0     Automatic - this mode provides for coord operation, free,
                  and flash to be determined automatically by the possible
                  sources (i.e. Interconnect, Time Base, or System Commands).
            1-253 Manual Pattern - these modes provides for Coord operation
                  running this pattern. This selection of pattern overrides
                  all other pattern commands.
```

 © 2023 AASHTO / ITE / NEMA

```
            254   Manual Free - this mode provides for Free operation without
                  coordination or Automatic Flash from any source.
            255   Manual Flash - this mode provides for Automatic Flash
                  without coordination or Free from any source.
      <Object Identifier> 1.3.6.1.4.1.1206.4.2.1.4.1
      <Object Type> P"
      REFERENCE "NEMA TS 2 Clause 3.6.2.4"
::= { coord 1 }
```

### 5.5.2 Coord Correction Mode Parameters

```
coordCorrectionMode   OBJECT-TYPE
      SYNTAX INTEGER { other (1),
            dwell (2),
            shortway (3),
            addOnly (4),
            subtractOnly (5) }
      ACCESS read-write
      STATUS mandatory
      DESCRIPTION "<Definition> This object defines the Coord Correction
            Mode. The possible modes are:
            other: the coordinator establishes a new offset by a mechanism
            not defined in this standard.
            dwell: when changing offset, the coordinator shall establish a
            new offset by dwelling in the coord phase(s) until the desired
            offset is reached.
            shortway (Smooth): when changing offset, the coordinator shall
            establish a new offset by adding or subtracting to/from the
            timings in a manner that limits the cycle change. This operation
            is performed in a device specific manner.
            addOnly: when changing offset, the coordinator shall establish a
            new offset by adding to the timings in a manner that limits the
            cycle change. This operation is performed in a device specific
            manner.
            subtractOnly: when changing offset, the coordinator shall
            establish a new offset by subtracting from the timings in a
            manner that limits the cycle change. This operation is performed
            in a device specific manner.
      <Object Identifier> 1.3.6.1.4.1.1206.4.2.1.4.2
      <Object Type> P"
::= { coord 2 }
```

### 5.5.3 Coord Maximum Mode Parameter

```
coordMaximumMode   OBJECT-TYPE
      SYNTAX INTEGER { other (1),
            maximum1 (2),
            maximum2 (3),
            maxInhibit (4),
            maximum3 (5) }
      ACCESS read-write
      STATUS mandatory
      DESCRIPTION "This object defines the Coord Maximum Mode. The possible
            modes are:
            other: the maximum mode is determined by some other mechanism not
            defined in this standard.
```

© 2023 AASHTO / ITE / NEMA Copy Per MIB Distribution Permission

```
            maximum1: the internal Maximum 1 Timing shall be effective while
            coordination is running a pattern.
            maximum2: the internal Maximum 2 Timing shall be effective while
            coordination is running a pattern.
            maxInhibit: the internal Maximum Timing shall be inhibited while
            coordination is running a pattern.
            maximum3: the internal Maximum 3 Timing shall be effective while
            coordination is running a pattern.
      <Object Identifier> 1.3.6.1.4.1.1206.4.2.1.4.3
      <Object Type> P"
::= { coord 3 }
```

### 5.5.4 Coord Force Mode Parameter

```
coordForceMode OBJECT-TYPE
      SYNTAX INTEGER { other(1),
            floating (2),
            fixed (3) }
      ACCESS read-write
      STATUS mandatory
      DESCRIPTION "<Definition> This object defines the Pattern Force Mode.
            The possible modes are:
            other: the CU implements a mechanism not defined in this
            standard.
            floating: each non-coord phase will be forced to limit its time
            to the split time value. This allows unused split time to revert
            to the coord phase.
            fixed: each non-coord phase will be forced at a fixed position in
            the cycle. This allows unused split time to revert to the
            following phase.
      <Object Identifier> 1.3.6.1.4.1.1206.4.2.1.4.4
      <Object Type> P"
::= { coord 4 }
```

### 5.5.5 Maximum Patterns Parameter

```
maxPatterns   OBJECT-TYPE
      SYNTAX INTEGER (1..253)
      ACCESS read-only
      STATUS mandatory
      DESCRIPTION "<Definition> The maximum number of Patterns this
            Controller Unit supports. This object indicates how many rows are
            in the patternTable object (254 and 255 are defined as non-
            pattern Status for Free and Flash).
      <Object Identifier> 1.3.6.1.4.1.1206.4.2.1.4.5
      <Object Type> S
      <Unit> pattern"
::= { coord 5 }
```

### 5.5.6 Pattern Table Type

```
patternTableType   OBJECT-TYPE
      SYNTAX INTEGER { other (1),
            patterns (2),
            offset3 (3),
            offset5 (4) }
```

 © 2023 AASHTO / ITE / NEMA

```
      ACCESS read-only
      STATUS mandatory
      DESCRIPTION "<Definition> This object provides information about any
            special organizational structure required for the pattern table.
            The defined structures are as follows:
            other: The pattern table setup is not described in this standard,
            refer to device manual.
            patterns: Each row of the pattern table represents a unique
            pattern and has no dependencies on other rows.
            offset3: The pattern table is organized into plans which have
            three offsets. Each plan uses three consecutive rows. Only
            patternOffsetTime and patternSequenceNumber values may vary
            between each of the three rows. Plan 1 is contained in rows 1, 2
            and 3, Plan 2 is contained in rows 4, 5 and 6, Plan 3 is in rows
            7, 8 and 9, etc.
            offset5:  The pattern table is organized into plans which have
            five offsets. Each plan occupies five consecutive rows. Only
            patternOffsetTime and patternSequenceNumber values may vary
            between each of the rows. Plan 1 is contained in rows 1, 2, 3, 4
            and 5, Plan 2 is contained in rows 6, 7, 8, 9 and 10, Plan 3 is
            contained in rows 11, 12, 13, 14 and 15, etc.
      <Object Identifier> 1.3.6.1.4.1.1206.4.2.1.4.6
      <Object Type> S"
      REFERENCE "NEMA TS 2 Clause 3.6.2.1 and 3.6.2.2"
::= { coord 6 }
```

### 5.5.7 Pattern Table

```
patternTable   OBJECT-TYPE
      SYNTAX SEQUENCE OF PatternEntry
      ACCESS not-accessible
      STATUS mandatory
      DESCRIPTION "<Definition> A table containing Actuated Controller Unit
            coordination Pattern parameters. The number of rows in this table
            is equal to the maxPatterns object.
      <TableType> static
      <Object Identifier> 1.3.6.1.4.1.1206.4.2.1.4.7"
::= { coord 7 }

patternEntry   OBJECT-TYPE
      SYNTAX PatternEntry
      ACCESS not-accessible
      STATUS mandatory
      DESCRIPTION "<Definition> Parameters for a specific Actuated Controller
            Unit pattern.
      <Object Identifier> 1.3.6.1.4.1.1206.4.2.1.4.7.1"
      INDEX   { patternNumber }
::= { patternTable 1 }

PatternEntry ::= SEQUENCE {
      patternNumber     INTEGER,
      patternCycleTime  INTEGER,
      patternOffsetTime INTEGER,
      patternSplitNumber      INTEGER,
      patternSequenceNumber   INTEGER,
      patternCoordSyncPoint   INTEGER,
      patternOptions          INTEGER,
```

© 2023 AASHTO / ITE / NEMA 

```
      patternSpatEnabledLanes OCTET STRING } --deprecrated
```

#### 5.5.7.1 Pattern Number Entry

```
patternNumber   OBJECT-TYPE
      SYNTAX INTEGER (1..253)
      ACCESS read-only
      STATUS mandatory
      DESCRIPTION "<Definition> The pattern number for objects in this row.
            This value shall not exceed the maxPatterns object value.
      <Object Identifier> 1.3.6.1.4.1.1206.4.2.1.4.7.1.1
      <Object Type> S
      <Unit> pattern"
::= { patternEntry 1 }
```

#### 5.5.7.2 Pattern Cycle Time

```
patternCycleTime   OBJECT-TYPE
      SYNTAX INTEGER (0..255)
      ACCESS read-write
      STATUS mandatory
      DESCRIPTION "<Definition> The patternCycleTime object specifies the
            length of the pattern cycle in seconds (NEMA TS 2 range: 30-255).
            A pattern cycle time less than adequate to service the minimum
            requirements of all phases shall result in Free mode. While this
            condition exists, the Local Free bit of unitAlarmStatus1 and the
            Local Override bit of shortAlarmStatus shall be set to one (1).

            The minimum requirements of a phase with a not-actuated ped
            include Minimum Green, Walk, Pedestrian Clear, Yellow Clearance,
            and Red Clearance; the minimum requirements of a phase with an
            actuated pedestrian include Minimum Green, Yellow Clearance, and
            Red Clearance. If the pattern cycle time is zero and the
            associated split table (if any) contains values greater than
            zero, then the CU shall utilize the split time values as maximum
            values for each phase.
      <Object Identifier> 1.3.6.1.4.1.1206.4.2.1.4.7.1.2
      <Object Type> P
      <Unit> second"
      REFERENCE "NEMA TS 2 Clause 3.6.2.1.1"
::= { patternEntry 2 }
```

#### 5.5.7.3 Pattern Offset Time Parameter

```
patternOffsetTime   OBJECT-TYPE
      SYNTAX INTEGER (0..255)
      ACCESS read-write
      STATUS mandatory
      DESCRIPTION "<Definition> The patternOffsetTime defines by how many
            seconds (NEMA TS 2 range: 0-254) the local time zero shall lag
            the system time zero (synchronization pulse) for this pattern. An
            offset value equal to or greater than the patternCycleTime shall
            result in Free being the operational mode. While this condition
            exists, the Local Free bit of unitAlarmStatus1 and the
            LocalOverride bit of shortAlarmStatus shall be set to one (1).
      <Object Identifier> 1.3.6.1.4.1.1206.4.2.1.4.7.1.3
```

 © 2023 AASHTO / ITE / NEMA

```
      <Object Type> P
      <Unit> second"
      REFERENCE "NEMA TS 2 Clause 3.6.2.2"
::= { patternEntry 3 }
```

#### 5.5.7.4 Pattern Split Number Parameter

```
patternSplitNumber   OBJECT-TYPE
      SYNTAX INTEGER (1..255)
      ACCESS read-write
      STATUS mandatory
      DESCRIPTION "<Definition> This object is used to locate information in
            the splitTable to use for this pattern. This value shall not
            exceed the maxSplits object value.
      <Object Identifier> 1.3.6.1.4.1.1206.4.2.1.4.7.1.4
      <Object Type> P
      <Unit> split"
::= { patternEntry 4 }
```

#### 5.5.7.5 Pattern Sequence Number Parameter

```
patternSequenceNumber   OBJECT-TYPE
      SYNTAX INTEGER (1..255)
      ACCESS read-write
      STATUS mandatory
      DESCRIPTION "<Definition> This object is used to locate information in
            the sequenceTable to use with this pattern. This value shall not
            exceed the maxSequences object value.
      <Object Identifier> 1.3.6.1.4.1.1206.4.2.1.4.7.1.5
      <Object Type> P
      <Unit> sequence"
::= { patternEntry 5 }
```

#### 5.5.7.6 Pattern Coordination Sync Point

```
patternCoordSyncPoint OBJECT-TYPE
      SYNTAX INTEGER { other (1),
            unitCoordSyncPoint (2),
            firstCoordPhsGrnBegin (3),
            lastCoordPhsGrnBegin (4),
            firstCoordPhsGrnEnd (5),
            lastCoordPhsGrnEnd (6),
            firstCoordPhsYelEnd (7),
            lastCoordPhsYelEnd (8) }
      ACCESS read-write
      STATUS mandatory
      DESCRIPTION "<Definition> This object is used to indicate the location
            of the system reference point for this pattern. The valid
            coordination sync points are:
            other: the coordination sync point is not described in this
            standard
            unitCoordSyncPoint: the coordination point is defined by
            unitCoordSyncPoint.
            firstCoordPhsGrnBegin: the coordination point is the beginning of
            the Green indication of the first coordinated phase.
```

© 2023 AASHTO / ITE / NEMA 

```
            lastCoordPhsGrnBegin: the coordination point is the beginning of
            the Green indication of the last coordinated phase.
            firstCoordPhsGrnEnd: the coordination point is end of the green
            indication of the first coordinated phase.
            lastCoordPhsGrnEnd: the coordination point is the end of the
            green indication of the last coordinated phase.
            firstCoordPhsYelEnd: the coordination point is the end of the
            yellow indication of the first coordinated phase.
            lastCoordPhsYelEnd: the coordination point is the end of the
            yellow indication of the last coordinated phase.
      <Object Identifier> 1.3.6.1.4.1.1206.4.2.1.4.7.1.6
      <Object Type> P"
      DEFVAL { firstCoordPhsGrnBegin }
::= { patternEntry 6 }
```

#### 5.5.7.7 Pattern Options

```
patternOptions   OBJECT-TYPE
      SYNTAX INTEGER { other (1),
            coordMaximumMode (2),
            maxInhibit (3),
            maximum1 (4),
            maximum2 (5),
            maximum3 (6) }
       ACCESS read-write
      STATUS mandatory
      DESCRIPTION "<Definition> This object represents the maximum mode to be
            used for the pattern. The valid maximum modes are:
            other: the maximum mode is determined by some other mechanism not
            defined in this standard.
            coordMaximumMode: use the maximum mode defined by the
            coordMaximumMode object.
            maxInhibit: the internal maximum timing shall be inhibited while
            coordination is running this pattern.
            maximum1: the internal Maximum 1 Timing shall be effective while
            coordination is running this pattern.
            maximum2: the internal Maximum 2 Timing shall be effective while
            coordination is running this pattern.
            maximum3: the internal Maximum 3 Timing shall be effective while
            coordination is running this pattern.
      <Object Identifier> 1.3.6.1.4.1.1206.4.2.1.4.7.1.7
      <Object Type> P"
::= { patternEntry 7 }
```

#### 5.5.7.8 Pattern Enabled Lanes

```
patternSpatEnabledLanes   OBJECT-TYPE
      SYNTAX   OCTET STRING
      ACCESS   read-write
      STATUS   deprecated
      DESCRIPTION "<Definition> Each octet in this octet string represents
            the index of the lanes (mapLaneIndex) that are activated for the
            current MAP plan in effect(xxxx).
            Each indexed lane should have its revocable Lane bit set (Bit 0
            set to (1) in the mapLaneAttribute object).
      <Object Identifier> 1.3.6.1.4.1.1206.4.2.1.4.7.1.8"
::= { patternEntry 8 }
```

Copy Per MIB Distribution Permission © 2023 AASHTO / ITE / NEMA

### 5.5.8 Maximum Splits

```
maxSplits   OBJECT-TYPE
      SYNTAX INTEGER (1..255)
      ACCESS read-only
      STATUS mandatory
      DESCRIPTION "<Definition> The maximum number of Split Plans this
            Actuated Controller Unit supports. This object indicates how many
            Split plans are in the splitTable object.
      <Object Identifier> 1.3.6.1.4.1.1206.4.2.1.4.8
      <Object Type> S
      <Unit> split"
::= { coord 8 }
```

### 5.5.9 Split Table

```
splitTable   OBJECT-TYPE
      SYNTAX SEQUENCE OF SplitEntry
      ACCESS not-accessible
      STATUS mandatory
      DESCRIPTION "<Definition> A table containing Actuated Controller Unit
            coordination split parameters. The number of rows in this table
            is equal to maxSplits.
      <TableType> static
      <Object Identifier> 1.3.6.1.4.1.1206.4.2.1.4.9"
::= { coord 9 }

splitEntry   OBJECT-TYPE
      SYNTAX SplitEntry
      ACCESS not-accessible
      STATUS mandatory
      DESCRIPTION "<Definition> Split type Parameters for a specific
            Actuated Controller Unit phase.
      <Object Identifier> 1.3.6.1.4.1.1206.4.2.1.4.9.1"
      INDEX   { splitNumber, splitPhase }
::= { splitTable 1 }

SplitEntry ::= SEQUENCE {
      splitNumber INTEGER,
      splitPhase  INTEGER,
      splitTime   INTEGER,
      splitMode   INTEGER,
      splitCoordPhase   INTEGER,
      splitOptions      INTEGER }
```

#### 5.5.9.1 Split Number

```
splitNumber   OBJECT-TYPE
      SYNTAX INTEGER (1..255)
      ACCESS read-only
      STATUS mandatory
      DESCRIPTION "<Definition> The object defines which rows of the split
            table comprise a split group. All rows that have the same
            splitNumber are in the same split group. The value of this object
            shall not exceed the maxSplits object value.
```

© 2023 AASHTO / ITE / NEMA 

```
      <Object Identifier> 1.3.6.1.4.1.1206.4.2.1.4.9.1.1
      <Object Type> S
      <Unit> split"
::= { splitEntry 1 }
```

#### 5.5.9.2 Split Phase Number

```
splitPhase   OBJECT-TYPE
      SYNTAX INTEGER (1..255)
      ACCESS read-only
      STATUS mandatory
      DESCRIPTION "<Definition> The phase number for objects in this row. The
            value of this object shall not exceed the maxPhases object value.
      <Object Identifier> 1.3.6.1.4.1.1206.4.2.1.4.9.1.2
      <Object Type> S
      <Unit> phase"
::= { splitEntry 2 }
```

#### 5.5.9.3 Split Time Parameter

```
splitTime   OBJECT-TYPE
      SYNTAX INTEGER (0..255)
      ACCESS read-write
      STATUS mandatory
      DESCRIPTION "<Definition> The time in seconds the splitPhase is allowed
            to receive (i.e. before a Force Off is applied) when constant
            demands exist on all phases. In floating coordForceMode, this is
            always the maximum time a non-coordinated phase is allowed to
            receive. In fixed coordForceMode, the actual allowed time may be
            longer if a previous phase gapped out.

            The splitTime includes all phase clearance times for the
            associated phase. The split time shall be longer than the sum of
            the phase minimum service requirements for the phase. When the
            time is NOT adequate to service the minimum service requirements
            of the phase, Free Mode shall be the result. The minimum
            requirements of a phase with a not-actuated ped include Minimum
            Green, Walk, Pedestrian Clear, Yellow Clearance, and Red
            Clearance; the minimum requirements of a phase with an actuated
            pedestrian include Minimum Green, Yellow Clearance, and Red
            Clearance.

            If the cycleTime entry of the associated patternTable entry is
            zero (i.e. the device is in Free Mode), then the value of this
            object shall be applied, if non-zero, as a maximum time for the
            associated phase.

            If the critical path through the phase diagram is less than the
            cycleTime entry of the associated patternTable entry, all extra
            time is allotted to the coordination phase in each ring.

            If the critical path through the phase diagram is greater than
            the cycleTime entry of the associated patternTable entry (and the
            cycleTime is not zero) the device shall operate in the Free Mode.

            While the Free Mode condition exists, the Local Override bit of
            shortAlarm shall be set to one (1).
```

 © 2023 AASHTO / ITE / NEMA

```
      <Object Identifier> 1.3.6.1.4.1.1206.4.2.1.4.9.1.3
      <Object Type> P
      <Unit> second"
      REFERENCE "NEMA TS 2 Clause 3.6.2.1.2"
::= { splitEntry 3 }
```

#### 5.5.9.4 Split Mode Parameter

```
splitMode   OBJECT-TYPE
      SYNTAX INTEGER { other(1),
            none (2),
            minimumVehicleRecall (3),
            maximumVehicleRecall (4),
            pedestrianRecall (5),
            maximumVehicleAndPedestrianRecall (6),
            phaseOmitted (7),
            nonActuated (8) }
      ACCESS read-write
      STATUS mandatory
      DESCRIPTION "<Definition> This object defines operational
            characteristics of the phase. The following options are
            available:
            other: the operation is not specified in this standard
            none: no split mode control.
            minimumVehicleRecall: this phase operates with a minimum vehicle
                  recall.
            maximumVehicleRecall: this phase operates with a maximum vehicle
                  recall. This value shall also be used for bicycle phase
                  recalls and transit phase recalls.
            pedestrianRecall: this phase operates with a pedestrian recall.
            maximumVehicleAndPedestrianRecall: this phase operates with a
                  maximum vehicle & pedestrian recall.
            phaseOmitted: this phase is omitted.
            nonActuated: this phase operates with a fixed split time.
      <Object Identifier> 1.3.6.1.4.1.1206.4.2.1.4.9.1.4
      <Object Type> P"
::= { splitEntry 4 }
```

#### 5.5.9.5 Split Coordinated Phase

```
splitCoordPhase  OBJECT-TYPE
      SYNTAX INTEGER (0..1)
      ACCESS read-write
      STATUS mandatory
      DESCRIPTION "<Definition> To select the associated phase as a
            coordinated phase this object shall be set to TRUE (non zero).
      <Object Identifier> 1.3.6.1.4.1.1206.4.2.1.4.9.1.5"
::= { splitEntry 5 }
```

#### 5.5.9.6 Split Options

```
splitOptions OBJECT-TYPE
      SYNTAX INTEGER (0..255)
      ACCESS read-write
      STATUS mandatory
```

© 2023 AASHTO / ITE / NEMA Copy Per MIB Distribution Permission

```
      DESCRIPTION "<Definition> Optional split functions (0 = False/Disabled,
            1 = True/Enabled).
            Bit 7: Reserved
            Bit 6: Reserved
            Bit 5: Reserved
            Bit 4: Reserved
            Bit 3: Reserved
            Bit 2: Reserved
            Bit 1: Reserved
            Bit 0: Transition Phase Omit - To allow the associated phase to
            be omitted during coord Correction Mode (transitions), this
            object shall be set to TRUE (1). If the associated phase is not
            allowed to be omitted, this object shall be set to FALSE (0).

            A SET of a 'reserved' bit to a value other than zero (0) shall
            return a badValue(3) error.
      <Object Identifier> 1.3.6.1.4.1.1206.4.2.1.4.9.1.6
      <Object Type> P"
::= { splitEntry 6 }
```

### 5.5.10 Coordination Pattern Status

```
coordPatternStatus OBJECT-TYPE
      SYNTAX INTEGER (0..255)
      ACCESS read-only
      STATUS mandatory
      DESCRIPTION "<Definition> This object defines the running coordination
            pattern/mode in the device. The possible values are:
            Value Description
            0     Not used
            1-253 Pattern - indicates the currently running pattern
            254   Free - indicates Free operation without coordination.
            255   Flash - indicates Automatic Flash without coordination.
      <Object Identifier> 1.3.6.1.4.1.1206.4.2.1.4.10
      <Object Type> S"
::= { coord 10 }
```

### 5.5.11 Local Free Status

```
localFreeStatus OBJECT-TYPE
      SYNTAX INTEGER { other(1),
            notFree(2),
            commandFree(3),
            transitionFree(4),
            inputFree(5),
            coordFree(6),
            badPlan(7),
            badCycleTime(8),
            splitOverrun (9),
            invalidOffset (10),
            failed(11) }
      ACCESS read-only
      STATUS mandatory
      DESCRIPTION "<Definition> The Free modes:
            other: Some other condition has caused the device to run in free
            mode.
            notFree: The unit is not running in free mode.
```

 © 2023 AASHTO / ITE / NEMA

```
            commandFree: the current pattern command is the Free mode
            pattern.
            transitionFree: the CU has a pattern command but is cycling to a
            point to begin coordination.
            inputFree: one of the CU inputs cause it to not respond to
            coordination.
            coordFree: the CU programming for the called pattern is to run
            Free.
            badPlan: Free - the called pattern is invalid.
            badCycleTime: the pattern cycle time is less than adequate to
            service the minimum requirements of all phases.
            splitOverrun: Free - the sum of the critical path splitTime's
            exceed the programmed patternCycleTime value.
            invalidOffset: Free - reserved / not used
            failed: cycling diagnostics have called for Free.

            An ASC may provide diagnostics beyond those stated herein.
            Therefore, for a set of given bad data, the free status between
            devices may be inconsistent.
      <Object Identifier> 1.3.6.1.4.1.1206.4.2.1.4.11
      <Object Type> S"
::= { coord 11 }
```

### 5.5.12 Coordination Cycle Status

```
coordCycleStatus OBJECT-TYPE
      SYNTAX INTEGER (0..510)
      ACCESS read-only
      STATUS mandatory
      DESCRIPTION "<Definition> The Coord Cycle Status represents the current
            position in the local coord cycle of the running pattern (0 to
            510 sec). This value normally counts down from patternCycleTime
            to Zero. This value may exceed the patternCycleTime during a
            coord cycle with offset correction (patternCycleTime +
            correction).
      <Object Identifier> 1.3.6.1.4.1.1206.4.2.1.4.12
      <Object Type> S
      <Unit> second"
::= { coord 12 }
```

### 5.5.13 Coordination Sync Status

```
coordSyncStatus OBJECT-TYPE
      SYNTAX INTEGER (0..510)
      ACCESS read-only
      STATUS mandatory
      DESCRIPTION "<Definition> The Coord Sync Status represents the time
            since the system reference point for the running pattern (0 to
            510 sec). This value normally counts up from Zero to the next
            system reference point (patternCycleTime). This value may exceed
            the patternCycleTime during a coord cycle in which the system
            reference point has changed.
      <Object Identifier> 1.3.6.1.4.1.1206.4.2.1.4.13
      <Object Type> S
      <Unit> second"
::= { coord 13 }
```

© 2023 AASHTO / ITE / NEMA Copy Per MIB Distribution Permission

### 5.5.14 System Pattern Control

```
systemPatternControl   OBJECT-TYPE
      SYNTAX INTEGER (0..255)
      ACCESS read-write
      STATUS mandatory
      DESCRIPTION "<Definition> This object is used to establish the Called
            System Pattern/Mode for the device. The possible values are:
            Value DESCRIPTION
            0     Standby - the system relinquishes control of the device.
            1-253 Pattern - these values indicate the system commanded
            pattern
            254   Free - this value indicates a call for Free
            255   Flash - this value indicates a call for Automatic Flash

            If an unsupported / invalid pattern is called, Free shall be the
            operational mode. The device shall reset this object to ZERO when
            in BACKUP Mode. A write to this object shall reset the Backup
            timer to ZERO (see unitBackupTime).
      <Object Identifier> 1.3.6.1.4.1.1206.4.2.1.4.14
      <Object Type> P"
::= { coord 14 }
```

### 5.5.15 System Sync Control

```
systemSyncControl   OBJECT-TYPE
      SYNTAX INTEGER (0..255)
      ACCESS read-write
      STATUS mandatory
      DESCRIPTION "<Definition> This object is used to establish the system
            reference point for the Called System Pattern by providing the
            current position in the system pattern cycle (0-254 sec). The
            device shall recognize a write to this object as a command to
            establish the time until the next system reference point.
            Thereafter, the system reference point shall be assumed to occur
            at a frequency equal to the patternCycleTime.

            When the value in the object is 255, the system REFERENCE point
            shall be referenced to the local Time Base in accordance with its
            programming.

            This CU must maintain an accuracy of 0.1 seconds based on the
            receipt of the SET packet. The device shall reset this object to
            ZERO when in BACKUP Mode. A write to this object shall reset the
            Backup timer to ZERO (see unitBackupTime).
      <Object Identifier> 1.3.6.1.4.1.1206.4.2.1.4.15
      <Object Type> P
      <Unit> second"
::= { coord  15 }
```

### 5.5.16 Unit Coordination Sync Point

```
unitCoordSyncPoint  OBJECT-TYPE
      SYNTAX INTEGER { other (1),
            firstPhaseGreenBegin (2),
            lastPhaseGreenBegin (3),
            firstPhaseGreenEnd (4),
```

 © 2023 AASHTO / ITE / NEMA

```
            lastPhaseGreenEnd (5),
            firstPhaseYellowEnd (6),
            lastPhaseYellowEnd (7) }
      ACCESS read-write
      STATUS mandatory
      DESCRIPTION "<Definition> This object is used to indicate the location
            of the system reference point for the running pattern. The valid
            coordination sync points are:
            other: the coordination sync point is not described in this
            standard
            firstPhaseGreenBegin: the coordination point is the beginning of
            the Green indication of the first coordinated phase.
            lastPhaseGreenBegin: the coordination point is the beginning of
            the Green indication of the last coordinated phase.
            firstPhaseGreenEnd: the coordination point is end of the green
            indication of the first coordinated phase.
            lastPhaseGreenEnd: the coordination point is the end of the green
            indication of the last coordinated phase.
            firstPhaseYellowEnd: the coordination point is the end of the
            yellow indication of the first coordinated phase.
            lastPhaseYellowEnd: the coordination point is the end of the
            yellow indication of the last coordinated phase.
      <Object Identifier> 1.3.6.1.4.1.1206.4.2.1.4.16
      <Object Type> P"
      DEFVAL { firstPhaseGreenBegin }
::= { coord 16 }
```

### 5.6 Time Base Parameters

```
timebaseAsc OBJECT IDENTIFIER
::= { asc 5 }

-- This object is an identifier used to group all objects for
-- support of timebase functions. If a device implements timebase
-- functions then these objects shall be supported.
```

#### 5.6.1 Time Base Pattern Sync Parameter

```
timebaseAscPatternSync   OBJECT-TYPE
      SYNTAX INTEGER (0..65535)
      ACCESS read-write
      STATUS mandatory
      DESCRIPTION "<Definition> Pattern Sync Reference in minutes past
            midnight. When the value is 65535, the controller unit shall use
            the Action time as the Sync Reference for that pattern. Action
            time is the hour and minute associated with the active
            dayPlanEventNumber (as defined in NTCIP 1201).
      <Object Identifier> 1.3.6.1.4.1.1206.4.2.1.5.1
      <Object Type> P
      <Unit> minute"
      REFERENCE "NEMA TS 2 Clause 3.8.2"
::= { timebaseAsc 1 }
```

#### 5.6.2 Maximum Time Base Actions

```
maxTimebaseAscActions   OBJECT-TYPE
```

© 2023 AASHTO / ITE / NEMA Copy Per MIB Distribution Permission

```
      SYNTAX INTEGER (1..255)
      ACCESS read-only
      STATUS mandatory
      DESCRIPTION "<Definition> The Maximum Number of Actions this device
            supports. This object indicates the maximum rows which shall
            appear in the timebaseAscActionTable object.
      <Object Identifier> 1.3.6.1.4.1.1206.4.2.1.5.2
      <Object Type> S
      <Unit> action"
::= { timebaseAsc 2 }
```

### 5.6.3 Time Base Asc Action Table

```
timebaseAscActionTable   OBJECT-TYPE
      SYNTAX SEQUENCE OF TimebaseAscActionEntry
      ACCESS not-accessible
      STATUS mandatory
      DESCRIPTION "<Definition> A table containing Actuated Controller Unit
            Time Base action parameters. The number of rows in this table is
            equal to the maxTimebaseAscActions object.
      <TableType> static
      <Object Identifier> 1.3.6.1.4.1.1206.4.2.1.5.3"
::= { timebaseAsc 3 }

timebaseAscActionEntry   OBJECT-TYPE
      SYNTAX TimebaseAscActionEntry
      ACCESS not-accessible
      STATUS mandatory
      DESCRIPTION "<Definition> Action Parameters for a Actuated Controller
            Unit Time Base Program.
      <Object Identifier> 1.3.6.1.4.1.1206.4.2.1.5.3.1"
      INDEX   { timebaseAscActionNumber }
::= { timebaseAscActionTable 1 }

TimebaseAscActionEntry ::= SEQUENCE {
      timebaseAscActionNumber INTEGER,
      timebaseAscPattern      INTEGER,
      timebaseAscAuxiliaryFunction  INTEGER,
      timebaseAscSpecialFunction    INTEGER,
      timebaseAscEnabledLane        INTEGER }
```

#### 5.6.3.1 Time Base Action Number

```
timebaseAscActionNumber   OBJECT-TYPE
      SYNTAX INTEGER (1..255)
      ACCESS read-only
      STATUS mandatory
      DESCRIPTION "<Definition> The time base Action number for objects in
            this row. This value shall not exceed the maxTimebaseAscActions
            object value. This object may be defined as a dayPlanActionOID
            (as defined in NTCIP 1201).
      <Object Identifier> 1.3.6.1.4.1.1206.4.2.1.5.3.1.1
      <Object Type> S
      <Unit> action"
::= { timebaseAscActionEntry 1 }
```

Copy Per MIB Distribution Permission © 2023 AASHTO / ITE / NEMA

#### 5.6.3.2 Time Base Action Pattern Parameter

```
timebaseAscPattern   OBJECT-TYPE
      SYNTAX INTEGER (0..255)
      ACCESS read-write
      STATUS mandatory
      DESCRIPTION "<Definition> The Pattern that shall be active when this
            Action is active. The value shall not exceed the value of
            maxPatterns, except for flash or free. A pattern of zero
            indicates that no pattern is being selected. A pattern = 0
            relinquishes control to entity of a lower priority than timebase
            and allows that entity to control (i.e., interconnect if
            available).
      <Object Identifier> 1.3.6.1.4.1.1206.4.2.1.5.3.1.2
      <Object Type> P
      <Unit> pattern"
::= { timebaseAscActionEntry 2 }
```

#### 5.6.3.3 Time Base Action Auxiliary Function Parameter

```
timebaseAscAuxiliaryFunction   OBJECT-TYPE
      SYNTAX INTEGER (0..255)
      ACCESS read-write
      STATUS mandatory
      DESCRIPTION "<Definition> The Auxiliary functions that shall be active
            when this Action is active.
            Bit 7: Reserved
            Bit 6: Reserved
            Bit 5: Reserved
            Bit 4: Reserved
            Bit 3: Dimming enabled if set (non-zero), disabled if clear
                  (zero). For dimming to occur, this control AND
                  ('unitControl' OR a dimming input) must be True.
            Bit 2: Auxiliary Function 3 enabled if set (non-zero), disabled
                  if clear (zero).
            Bit 1: Auxiliary Function 2 enabled if set (non-zero), disabled
                  if clear (zero).
            Bit 0: Auxiliary Function 1 enabled if set (non-zero), disabled
                  if clear (zero).
            A SET of a 'reserved' bit to a value other than zero (0) shall
            return a badValue(3) error.
      <Object Identifier> 1.3.6.1.4.1.1206.4.2.1.5.3.1.3
      <Object Type> P"
::= { timebaseAscActionEntry 3 }
```

#### 5.6.3.4 Time Base Action Special Function Parameter

```
timebaseAscSpecialFunction   OBJECT-TYPE
      SYNTAX INTEGER (0..255)
      ACCESS read-write
      STATUS mandatory
      DESCRIPTION "<Definition> The Special Functions that shall be active
            when this Action is active.
            Bit 7: Special Function 8
            Bit 6: Special Function 7
            Bit 5: Special Function 6
            Bit 4: Special Function 5
```

© 2023 AASHTO / ITE / NEMA Copy Per MIB Distribution Permission

```
            Bit 3: Special Function 4
            Bit 2: Special Function 3
            Bit 1: Special Function 2
            Bit 0: Special Function 1
            Bit = 0 - False/Disabled, Bit = 1 - True/Enabled
      <Object Identifier> 1.3.6.1.4.1.1206.4.2.1.5.3.1.4"
::= { timebaseAscActionEntry 4 }
```

#### 5.6.3.5 Time Base Action Enabled Lane

```
timebaseAscEnabledLane   OBJECT-TYPE
      SYNTAX INTEGER (0..255)
      ACCESS read-write
      STATUS mandatory
      DESCRIPTION "<Definition> This value is equal to the enabledLaneIndex
            (row) in the spatEnabledLanesConcurrencyTable that contains the
            enabledLaneConcurrency lanes to be active when this Action is
            active. A value of zero indicates that no lanes are to be be
            enabled as part of this action.
      <Object Identifier> 1.3.6.1.4.1.1206.4.2.1.5.3.1.4
      <Object Type> P"
::= { timebaseAscActionEntry 5 }
```

### 5.6.4 Time Base Asc Action Status

```
timebaseAscActionStatus OBJECT-TYPE
      SYNTAX INTEGER(0..255)
      ACCESS read-only
      STATUS mandatory
      DESCRIPTION "<Definition> This object indicates the current time base
            Action Table row that will be used when the CU is in Time Base
            operation. A value of zero indicates that no time base Action is
            selected.
      <Object Identifier> 1.3.6.1.4.1.1206.4.2.1.5.4
      <Object Type> S"
::= { timebaseAsc 4 }
```

### 5.6.5 Action Plan Command

```
actionPlanControl   OBJECT-TYPE
      SYNTAX INTEGER (0..255)
      ACCESS read-write
      STATUS mandatory
      DESCRIPTION "<Definition> This object is used to activate a configured
            action plan by referencing the Action number
            (timebaseAscActionNumber). When this action plan is in effect,
            the CU shall operate as if the action plan has been activated by
            the time base scheduler. A value of 0 shall deactivate the action
            plan and returns to what would normally have been in operation if
            the action plan was not in effect.
            If an unsupported / invalid Action number is called, Free shall
            be the operational mode.
            The device shall reset this object to ZERO when in BACKUP Mode. A
            write to this object shall reset the Backup timer to ZERO (see
            unitBackupTime).
      <Object Identifier> 1.3.6.1.4.1.1206.4.2.1.5.5
```

 © 2023 AASHTO / ITE / NEMA

```
      <Object Type> C"
      DEFVAL { 0 }
::= { timebaseAsc 5 }
```

### 5.7 Preempt Parameters

```
preempt OBJECT IDENTIFIER
::= { asc 6 }

-- The preempt node contains objects that support preempt input
-- functions for the device.
```

#### 5.7.1 Maximum Preempts

```
maxPreempts   OBJECT-TYPE
      SYNTAX INTEGER (1..255)
      ACCESS read-only
      STATUS mandatory
      DESCRIPTION "<Definition> The Maximum Number of Preempts this Actuated
            Controller Unit supports. This object indicates the maximum rows
            which shall appear in the preemptTable object.
      <Object Identifier> 1.3.6.1.4.1.1206.4.2.1.6.1
      <Object Type> S
      <Unit> preempt"
      REFERENCE "NEMA TS 2 Clause 3.7"
::= { preempt 1 }
```

#### 5.7.2 Preempt Table

```
preemptTable   OBJECT-TYPE
      SYNTAX SEQUENCE OF PreemptEntry
      ACCESS not-accessible
      STATUS mandatory
      DESCRIPTION "<Definition> A table containing Actuated Controller Unit
            preemption parameters. The number of rows in this table is equal
            to the maxPreempts object.
      <TableType> static
      <Object Identifier> 1.3.6.1.4.1.1206.4.2.1.6.2"
::={ preempt 2 }

preemptEntry   OBJECT-TYPE
      SYNTAX PreemptEntry
      ACCESS not-accessible
      STATUS mandatory
      DESCRIPTION "<Definition> Parameters for a specific Actuated Controller
            Unit preemptor.
      <Object Identifier> 1.3.6.1.4.1.1206.4.2.1.6.2.1"
      INDEX    { preemptNumber }
::={ preemptTable 1}

PreemptEntry ::= SEQUENCE {
      preemptNumber           INTEGER,
      preemptControl          INTEGER,
      preemptLink             INTEGER,
      preemptDelay            INTEGER,
      preemptMinimumDuration  INTEGER,
```

© 2023 AASHTO / ITE / NEMA 

```
      preemptMinimumGreen     INTEGER,
      preemptMinimumWalk      INTEGER,
      preemptEnterPedClear    INTEGER,
      preemptTrackGreen       INTEGER,
      preemptDwellGreen       INTEGER,
      preemptMaximumPresence  INTEGER,
      preemptTrackPhase       OCTET STRING,
      preemptDwellPhase       OCTET STRING,
      preemptDwellPed         OCTET STRING,
      preemptExitPhase        OCTET STRING,
      preemptState            INTEGER,
      preemptTrackOverlap     OCTET STRING,
      preemptDwellOverlap     OCTET STRING,
      preemptCyclingPhase     OCTET STRING,
      preemptCyclingPed       OCTET STRING,
      preemptCyclingOverlap   OCTET STRING,
      preemptEnterYellowChange      INTEGER,
      preemptEnterRedClear    INTEGER,
      preemptTrackYellowChange      INTEGER,
      preemptTrackRedClear    INTEGER,
      preemptSequenceNumber   INTEGER,
      preemptExitType   INTEGER }
```

#### 5.7.2.1 Preempt Number

```
preemptNumber   OBJECT-TYPE
      SYNTAX INTEGER (1..255)
      ACCESS read-only
      STATUS mandatory
      DESCRIPTION "<Definition> The preempt number for objects in this row.
            The value shall not exceed the maxPreempts object value. When all
            preemptControl objects have a value where bit 2 = 0, each
            preemptNumber routine shall be a higher priority and override all
            preemptNumber routines that have a larger preemptNumber.

            When a preemptControl object has a value where bit 2 = 1, the
            next higher preemptNumber becomes of equal priority with the
            preemptNumber but may still be a higher priority than larger
            preemptNumbers depending on bit 2 of the relavent preemptControl
            objects.
      <Object Identifier> 1.3.6.1.4.1.1206.4.2.1.6.2.1.1
      <Object Type> S
      <Unit> preempt"
::= { preemptEntry 1 }
```

#### 5.7.2.2 Preempt Control Parameter

```
preemptControl   OBJECT-TYPE
      SYNTAX INTEGER (0..255)
      ACCESS read-write
      STATUS mandatory
      DESCRIPTION "<Definition> Preempt Miscellaneous Control Parameter Mask
            (Bit=0: False/Disabled, Bit=1: True/Enabled) as follows:
            Bit 7: Reserved
            Bit 6: Reserved
```

 © 2023 AASHTO / ITE / NEMA

```
            Bit 5: All Red Flash - the CU shall enter to all red flash
                  instead of normal operations when the
                  preemptMaximumPresence is exceeded
            Bit 4: Preempt Enable - enables or disables this preemption
                  input. Disabling preempts should be done with extreme
                  caution.
            Bit 3: Flash Dwell - the CU shall cause the phases listed in the
                  preemptDwellPhase object to flash Yellow during the Dwell
                  interval. All active phases not listed in preemptDwellPhase
                  shall flash Red.
                  The CU shall cause the overlaps listed in the
                  preemptDwellOverlap object to flash Yellow during the Dwell
                  state. All active overlaps not listed in
                  preemptDwellOverlap shall flash Red. Preempt cycling phase
                  programming is ignored if this bit is set. This control is
                  optional.
            Bit 2: Preempt Override preemptNumber + 1 - provide a means to
                  define whether this preempt shall NOT override the next
                  higher numbered Preempt. When set (1) this preempt shall
                  not override the next higher numbered preempt. Lowered
                  numbered preempts override higher numbered preempts. For
                  example, 1 overrides 3, and the only way to get 3 equal to
                  1, is to set both 1 and 2 to NOT override the next higher
                  numbered preempt. This parameter shall be ignored when
                  preemptNumber equals maxPreempts.
            Bit 1: Preempt Override Flash - provide a means to define whether
                  this preempt shall NOT override Automatic Flash. When set
                  (1) this preempt shall not override Automatic Flash.
            Bit 0: Non-Locking Memory - provide a means to enable an
                  operation which does not require detector memory. When set
                  (1) a preempt sequence shall not occur if the preempt input
                  terminates prior to expiration of the preemptDelay time.
            A SET of a 'reserved' bit to a value other than zero (0) shall
            return a badValue(3) error. Support for Preempt Enable and All
            Red Flash added in NTCIP 1202 v03.
      <Object Identifier> 1.3.6.1.4.1.1206.4.2.1.6.2.1.2
      <Object Type> P"
      REFERENCE "NEMA TS 2 Clause 3.7.2.1 and 3.7.2.2"
      DEFVAL { 0 }
::= { preemptEntry 2 }
```

#### 5.7.2.3 Preempt Link Parameter

```
preemptLink   OBJECT-TYPE
      SYNTAX INTEGER (0..255)
      ACCESS read-write
      STATUS mandatory
      DESCRIPTION "<Definition> This object provides a means to define a
            higher priority preempt to be combined (linked) with this
            preempt. At the end of preemptDwellGreen, the linked preempt
            shall receive an automatic call that shall be maintained as long
            as the demand for this preempt is active. Any value that is not a
            higher priority preempt or a valid preempt shall be ignored. The
            value shall not exceed the maxPreempts object value.
      <Object Identifier> 1.3.6.1.4.1.1206.4.2.1.6.2.1.3
      <Object Type> P
      <Unit> preempt"
```

© 2023 AASHTO / ITE / NEMA Copy Per MIB Distribution Permission

```
      DEFVAL { 0 }
::= { preemptEntry 3 }
```

#### 5.7.2.4 Preempt Delay Parameter

```
preemptDelay   OBJECT-TYPE
      SYNTAX INTEGER (0..65535)
      ACCESS read-write
      STATUS mandatory
      DESCRIPTION "<Definition> Preempt Delay Time in seconds (0-600 sec).
            This value determines the time the preempt input shall be active
            prior to initiating any preempt sequence. A non-locking preempt
            input which is removed prior to the completion of this time shall
            not cause a preempt sequence to occur.
      <Object Identifier> 1.3.6.1.4.1.1206.4.2.1.6.2.1.4
      <Object Type> P
      <Unit> second"
      DEFVAL { 0 }
::= { preemptEntry 4 }
```

#### 5.7.2.5 Preempt Duration Parameter

```
preemptMinimumDuration   OBJECT-TYPE
      SYNTAX INTEGER (0..65535)
      ACCESS read-write
      STATUS mandatory
      DESCRIPTION "<Definition> Preempt Minimum Duration Time in seconds
            (0..65535 sec). This value determines the minimum time during
            which the preempt is active. Duration begins timing at the end of
            Preempt Delay (if non zero) and will prevent an exit from the
            Dwell interval until this time has elapsed.
      <Object Identifier> 1.3.6.1.4.1.1206.4.2.1.6.2.1.5
      <Object Type> P
      <Unit> second"
      DEFVAL { 0 }
::= { preemptEntry 5 }
```

#### 5.7.2.6 Preempt Minimum Green Parameter

```
preemptMinimumGreen   OBJECT-TYPE
      SYNTAX INTEGER (0..255)
      ACCESS read-write
      STATUS mandatory
      DESCRIPTION "<Definition> Preempt Minimum Green Time in seconds (0-255
            sec). A preempt initiated transition shall not cause the
            termination of an existing Green prior to its display for lesser
            of the phase's Minimum Green time or this period. CAUTION - if
            this value is zero, phase Green is terminated immediately.
      <Object Identifier> 1.3.6.1.4.1.1206.4.2.1.6.2.1.6
      <Object Type> P
      <Unit> second"
      DEFVAL { 255 }
::= { preemptEntry 6 }
```

 © 2023 AASHTO / ITE / NEMA

#### 5.7.2.7 Preempt Minimum Walk Parameter

```
preemptMinimumWalk   OBJECT-TYPE
      SYNTAX INTEGER (0..255)
      ACCESS read-write
      STATUS mandatory
      DESCRIPTION "<Definition> Preempt Minimum Walk Time in seconds (0-255
            sec). A preempt initiated transition shall not cause the
            termination of an existing Walk prior to its display for the
            lesser of the phase's Walk time or this period. CAUTION - if this
            value is zero, phase Walk is terminated immediately.
      <Object Identifier> 1.3.6.1.4.1.1206.4.2.1.6.2.1.7
      <Object Type> P
      <Unit> second"
      DEFVAL { 255 }
::= { preemptEntry 7 }
```

#### 5.7.2.8 Preempt Enter Pedestrian Clear Parameter

```
preemptEnterPedClear   OBJECT-TYPE
      SYNTAX INTEGER (0..255)
      ACCESS read-write
      STATUS mandatory
      DESCRIPTION "<Definition> Enter Ped ClearTime in seconds (0-255 sec).
            This parameter controls the ped clear timing for a normal Walk
            signal terminated by a preempt initiated transition. A preempt
            initiated transition shall not cause the termination of a
            Pedestrian Clearance prior to its display for the lesser of the
            phase's Pedestrian Clearance time or this period. CAUTION - if
            this value is zero, phase Ped Clear is terminated immediately.
      <Object Identifier> 1.3.6.1.4.1.1206.4.2.1.6.2.1.8
      <Object Type> P
      <Unit> second"
      DEFVAL { 255 }
::= { preemptEntry 8 }
```

#### 5.7.2.9 Preempt Track Green Parameter

```
preemptTrackGreen   OBJECT-TYPE
      SYNTAX INTEGER (0..255)
      ACCESS read-write
      STATUS mandatory
      DESCRIPTION "<Definition> Track Clear Green Time in seconds (0-255
            sec). This parameter controls the green timing for the track
            clearance movement. Track Clear phase(s) are enabled in the
            preemptTrackPhase object. If this value is zero, the track
            clearance movement is omitted, regardless of preemptTrackPhase
            programming.
      <Object Identifier> 1.3.6.1.4.1.1206.4.2.1.6.2.1.9
      <Object Type> P
      <Unit> second"
      DEFVAL { 0 }
::= { preemptEntry 9 }
```

#### 5.7.2.10 Preempt Minimum Dwell Parameter

```
preemptDwellGreen   OBJECT-TYPE
```

© 2023 AASHTO / ITE / NEMA 

```
      SYNTAX INTEGER (0..255)
      ACCESS read-write
      STATUS mandatory
      DESCRIPTION "<Definition> Minimum Dwell interval in seconds (1-255
            sec). This parameter controls the minimum timing for the dwell
            interval. Phase(s) active during the Dwell interval are enabled
            in preemptDwellPhase and preemptCyclingPhase objects. The Dwell
            interval shall not terminate prior to the completion of
            preemptMinimumDuration, preemptDwellGreen (this object), and the
            call is no longer present.
      <Object Identifier> 1.3.6.1.4.1.1206.4.2.1.6.2.1.10
      <Object Type> P
      <Unit> second"
      DEFVAL { 10 }
::= { preemptEntry 10 }
```

#### 5.7.2.11 Preempt Maximum Presence Parameter

```
preemptMaximumPresence   OBJECT-TYPE
      SYNTAX INTEGER (0..65535)
      ACCESS read-write
      STATUS mandatory
      DESCRIPTION "<Definition> Preempt Maximum Presence time in seconds (0-
            65535 sec). This value determines the maximum time which a
            preempt call may remain active and be considered valid. When the
            preempt call has been active for this time period, the CU shall
            return to normal operation. This preempt call shall be considered
            invalid until such time as a change in state occurs (no longer
            active). When set to zero the preempt maximum presence time is
            disabled.
      <Object Identifier> 1.3.6.1.4.1.1206.4.2.1.6.2.1.11
      <Object Type> P
      <Unit> second"
      DEFVAL { 0 }
::= { preemptEntry 11 }
```

#### 5.7.2.12 Preempt Track Phase Parameter

```
preemptTrackPhase   OBJECT-TYPE
      SYNTAX OCTET STRING
      ACCESS read-write
      STATUS mandatory
      DESCRIPTION "<Definition> Each octet within the octet string contains a
            phaseNumber(binary value) that shall be active during the Preempt
            Track Clear intervals. The values of phaseNumber used here shall
            not exceed maxPhases or violate the Consistency Checks defined in
            Section 4.3.2.
      <Object Identifier> 1.3.6.1.4.1.1206.4.2.1.6.2.1.12
      <Object Type> P2"
      DEFVAL { "" }
::= { preemptEntry 12 }
```

#### 5.7.2.13 Preempt Dwell Phase Parameter

```
preemptDwellPhase   OBJECT-TYPE
      SYNTAX OCTET STRING
```

 © 2023 AASHTO / ITE / NEMA

```
      ACCESS read-write
      STATUS mandatory
      DESCRIPTION "<Definition> Each octet within the octet string contains a
            phaseNumber (binary value) that specifies the phase(s) to be
            served in the Preempt Dwell interval. The phase(s) defined in
            preemptCyclingPhase shall occur after those defined herein. The
            values of phaseNumber used here shall not exceed maxPhases or
            violate the Consistency Checks defined in Section 4.3.2.
      <Object Identifier> 1.3.6.1.4.1.1206.4.2.1.6.2.1.13
      <Object Type> P2"
      DEFVAL { "" }
::= { preemptEntry 13 }
```

#### 5.7.2.14 Preempt Dwell Ped Parameter

```
preemptDwellPed   OBJECT-TYPE
      SYNTAX OCTET STRING
      ACCESS read-write
      STATUS mandatory
      DESCRIPTION "<Definition> Each octet within the octet string contains a
            phaseNumber (binary value) that specifies the pedestrian
            movement(s) to be served in the Preempt Dwell interval. The peds
            defined in preemptCyclingPed shall occur after those defined
            herein. The values of phaseNumber used here shall not  exceed
            maxPhases or violate the Consistency Checks defined in Section
            4.3.2.
      <Object Identifier> 1.3.6.1.4.1.1206.4.2.1.6.2.1.14
      <Object Type> P2"
      DEFVAL { "" }
::= { preemptEntry 14 }
```

#### 5.7.2.15 Preempt Exit Phase Parameter

```
preemptExitPhase   OBJECT-TYPE
      SYNTAX OCTET STRING
      ACCESS read-write
      STATUS mandatory
      DESCRIPTION "<Definition> Each octet within the octet string contains a
            phaseNumber (binary value) that shall be active following
            Preempt. The values of phaseNumber used here shall not exceed
            maxPhases or violate the Consistency Checks defined in Section
            4.3.2.
      <Object Identifier> 1.3.6.1.4.1.1206.4.2.1.6.2.1.15
      <Object Type> P2"
      DEFVAL { "" }
::= { preemptEntry 15 }
```

#### 5.7.2.16 Preempt State

```
preemptState   OBJECT-TYPE
      SYNTAX INTEGER { other (1),
            notActive (2),
            notActiveWithCall (3),
            entryStarted (4),
            trackService (5),
            dwell (6),
```

© 2023 AASHTO / ITE / NEMA Copy Per MIB Distribution Permission

```
            linkActive (7),
            exitStarted (8),
            maxPresence (9),
            advancedPreempt (10) }
      ACCESS read-only
      STATUS mandatory
      DESCRIPTION "<Definition> Preempt State provides status on which state
            the associated preempt is in. The states are as follows:
            other: preempt service is not specified in this standard.
            notActive: preempt input is not active, this preempt is not
            active.
            notActiveWithCall: preempt input is active, preempt service has
            not started.
            entryStarted: preempt service is timing the entry intervals.
            trackService: preempt service is timing the track intervals.
            dwell: preempt service is timing the dwell intervals.
            linkActive: preempt service is performing linked operation.
            exitStarted: preempt service is timing the exit intervals.
            maxPresence: preempt input has exceeded maxPresence time
            advancedPreempt: preempt service is timing the advanced
            preemption time.
      <Object Identifier> 1.3.6.1.4.1.1206.4.2.1.6.2.1.16
      <Object Type> S"
::= { preemptEntry 16}
```

#### 5.7.2.17 Preempt Track Overlap Parameter

```
preemptTrackOverlap   OBJECT-TYPE
      SYNTAX OCTET STRING
      ACCESS read-write
      STATUS mandatory
      DESCRIPTION "<Definition> Each octet within the octet string contains a
            overlapNumber (binary value) that shall be active during the
            Preempt Track Clear intervals. The values of overlapNumber used
            here shall not exceed maxOverlaps or violate the consistency
            checks defined in Section 4.3.2.
      <Object Identifier> 1.3.6.1.4.1.1206.4.2.1.6.2.1.17
      <Object Type> P2"
      DEFVAL { "" }
::= { preemptEntry 17 }
```

#### 5.7.2.18 Preempt Dwell Overlap Parameter

```
preemptDwellOverlap   OBJECT-TYPE
      SYNTAX OCTET STRING
      ACCESS read-write
      STATUS mandatory
      DESCRIPTION "<Definition> Each octet within the octet string contains a
            overlapNumber (binary value) that is allowed during the Preempt
            Dwell interval. The values of overlapNumber used here shall not
            exceed maxOverlaps or violate the consistency checks defined in
            Section 4.3.2.
      <Object Identifier> 1.3.6.1.4.1.1206.4.2.1.6.2.1.18
      <Object Type> P2"
      DEFVAL { "" }
::= { preemptEntry 18 }
```

 © 2023 AASHTO / ITE / NEMA

#### 5.7.2.19 Preempt Cycling Phase Parameter

```
preemptCyclingPhase   OBJECT-TYPE
      SYNTAX OCTET STRING
      ACCESS read-write
      STATUS mandatory
      DESCRIPTION "<Definition> Each octet within the octet string contains a
            phaseNumber (binary value) that is allowed to cycle during the
            Preempt Dwell interval. The values of phaseNumber used here shall
            not exceed maxPhases or violate the Consistency Checks defined in
            Section 4.3.2.
      <Object Identifier> 1.3.6.1.4.1.1206.4.2.1.6.2.1.19
      <Object Type> P2"
      DEFVAL { "" }
::= { preemptEntry 19 }
```

#### 5.7.2.20 Preempt Cycling Ped Parameter

```
preemptCyclingPed   OBJECT-TYPE
      SYNTAX OCTET STRING
      ACCESS read-write
      STATUS mandatory
      DESCRIPTION "<Definition> Each octet within the octet string contains a
            phaseNumber (binary value) indicating a pedestrian movement that
            is allowed to cycle during the Preempt Dwell interval. The values
            of phaseNumber used here shall not exceed maxPhases or violate
            the consistency checks defined in Section 4.3.2.
      <Object Identifier> 1.3.6.1.4.1.1206.4.2.1.6.2.1.20
      <Object Type> P2"
      DEFVAL { "" }
::= { preemptEntry 20 }
```

#### 5.7.2.21 Preempt Cycling Overlap Parameter

```
preemptCyclingOverlap   OBJECT-TYPE
      SYNTAX OCTET STRING
      ACCESS read-write
      STATUS mandatory
      DESCRIPTION "<Definition> Each octet within the octet string contains a
            overlapNumber (binary value) that is allowed to cycle during the
            Preempt Dwell interval. The values of overlapNumber used here
            shall not exceed maxOverlaps or violate the consistency checks
            defined in Section 4.3.2.
      <Object Identifier> 1.3.6.1.4.1.1206.4.2.1.6.2.1.21
      <Object Type> P2"
      DEFVAL { "" }
::= { preemptEntry 21 }
```

#### 5.7.2.22 Preempt Enter Yellow Change Parameter

```
preemptEnterYellowChange   OBJECT-TYPE
      SYNTAX INTEGER (0..255)
      ACCESS read-write
      STATUS mandatory
      DESCRIPTION "<Definition> Enter Yellow Change in tenth seconds (0-25.5
            sec). This parameter controls the yellow change timing for a
            normal Yellow Change signal terminated by a preempt initiated
```

© 2023 AASHTO / ITE / NEMA Copy Per MIB Distribution Permission

```
            transition. A preempt initiated transition shall not cause the
            termination of a Yellow Change prior to its display for the
            lesser of the phase's Yellow Change time or this period. CAUTION
            - if this value is zero, phase Yellow Change is terminated
            immediately.
      <Object Identifier> 1.3.6.1.4.1.1206.4.2.1.6.2.1.22
      <Object Type> P
      <Unit> tenth second"
      DEFVAL { 255 }
::= { preemptEntry 22 }
```

#### 5.7.2.23 Preempt Enter Red Clear Parameter

```
preemptEnterRedClear   OBJECT-TYPE
      SYNTAX INTEGER (0..255)
      ACCESS read-write
      STATUS mandatory
      DESCRIPTION "<Definition> Enter Red Clear in tenth seconds (0-25.5
            sec). This parameter controls the red clearance timing for a
            normal Red Clear signal terminated by a preempt initiated
            transition. A preempt initiated transition shall not cause the
            termination of a Red Clear prior to its display for the lesser of
            the phase's Red Clear time or this period. CAUTION - if this
            value is zero, phase Red Clear is terminated immediately.
      <Object Identifier> 1.3.6.1.4.1.1206.4.2.1.6.2.1.23
      <Object Type> P
      <Unit> tenth second"
      DEFVAL { 255 }
::= { preemptEntry 23 }
```

#### 5.7.2.24 Preempt Track Yellow Change Parameter

```
preemptTrackYellowChange   OBJECT-TYPE
      SYNTAX INTEGER (0..255)
      ACCESS read-write
      STATUS mandatory
      DESCRIPTION "<Definition> Track Clear Yellow Change time in tenth
            seconds (0-25.5 sec). The lesser of the phase's Yellow Change
            time or this parameter controls the yellow timing for the track
            clearance movement. Track clear phase(s) are enabled in the
            preemptTrackPhase object.
      <Object Identifier> 1.3.6.1.4.1.1206.4.2.1.6.2.1.24
      <Object Type> P
      <Unit> tenth second"
      DEFVAL { 255 }
::= { preemptEntry 24 }
```

#### 5.7.2.25 Preempt Track Red Clear Parameter

```
preemptTrackRedClear   OBJECT-TYPE
      SYNTAX INTEGER (0..255)
      ACCESS read-write
      STATUS mandatory
      DESCRIPTION "<Definition> Track Clear Red Clear time in tenth seconds
            (0-25.5 sec). The lesser of the phase's Red Clear time or this
            parameter controls the Red Clear timing for the track clearance
```

 © 2023 AASHTO / ITE / NEMA

```
            movement. Track clear phase(s) are enabled in the
            preemptTrackPhase object.
      <Object Identifier> 1.3.6.1.4.1.1206.4.2.1.6.2.1.25
      <Object Type> P
      <Unit> tenth second"
      DEFVAL { 255 }
::= { preemptEntry 25 }
```

#### 5.7.2.26 Preempt Sequence Number

```
preemptSequenceNumber OBJECT-TYPE
      SYNTAX INTEGER (1..255)
      ACCESS read-write
      STATUS mandatory
      DESCRIPTION "<Definition> This object is used to configure the
            sequenceNumber to run during the preempt's dwell duration. This
            value shall not exceed the maxSequences object value.
      <Object Identifier> 1.3.6.1.4.1.1206.4.2.1.6.2.1.26
      <Object Type> P
      <Unit> sequence"
::= { preemptEntry 26 }
```

#### 5.7.2.27 Preempt Exit Type

```
preemptExitType OBJECT-TYPE
      SYNTAX INTEGER { exitPhases (1),
            queueDelayRecovery (2),
            shortService (3),
            exitCoord (4)}
      ACCESS read-write
      STATUS mandatory
      DESCRIPTION "<Definition> This object defines the exit strategy (type)
            to be used following the end of the preempt. The exit types are
            as follows:
            exitPhases: the CU immediately enters the exit phases to be
                  active as configured
            queueDelayRecovery: the CU immediately enters the phase with the
                  highest demand or longest wait time
            shortService: the CU immediately enters the first short service
                  phase. The first short service phase is a phase where only
                  the preempt minimum green time was serviced during the
                  advanced preemption time or the right-of-way transfer time
            exitCoord: the CU immediately returns to the place in the
                  coordinated cycle where the ASC would have been if there
                  was no preempt
      <Object Type> P
      <Object Identifier> 1.3.6.1.4.1.1206.4.2.1.6.2.1.27"
::= { preemptEntry 28 }
```

### 5.7.3 Preempt Control Table

```
preemptControlTable   OBJECT-TYPE
      SYNTAX SEQUENCE OF PreemptControlEntry
      ACCESS not-accessible
      STATUS mandatory
```

© 2023 AASHTO / ITE / NEMA 

```
      DESCRIPTION "<Definition> This table contains the control objects that
            allow the preempts to be activated remotely. There shall be one
            control object for each preempt input supported by the device.
            The number of rows in this table shall be equal to maxPreempts.
      <TableType> static
      <Object Identifier> 1.3.6.1.4.1.1206.4.2.1.6.3"
::= { preempt 3 }

preemptControlEntry   OBJECT-TYPE
      SYNTAX PreemptControlEntry
      ACCESS not-accessible
      STATUS mandatory
      DESCRIPTION "<Definition> Control objects for each preempt input. These
            objects allow the system to activate preempt functions remotely.
      <Object Identifier> 1.3.6.1.4.1.1206.4.2.1.6.3.1"
      INDEX   { preemptControlNumber }
::= { preemptControlTable 1 }

PreemptControlEntry ::= SEQUENCE {
      preemptControlNumber    INTEGER,
      preemptControlState     INTEGER }
```

#### 5.7.3.1 Preempt Control Number

```
preemptControlNumber   OBJECT-TYPE
      SYNTAX INTEGER (1..255)
      ACCESS read-only
      STATUS mandatory
      DESCRIPTION "<Definition> This object shall indicate the preempt input
            number controlled by the associated preemptControlState object in
            this row.
      <Object Identifier> 1.3.6.1.4.1.1206.4.2.1.6.3.1.1
      <Object Type> S
      <Unit> preempt"
::= { preemptControlEntry  1 }
```

#### 5.7.3.2 Preempt Control State

```
preemptControlState   OBJECT-TYPE
      SYNTAX INTEGER (0..1)
      ACCESS read-write
      STATUS mandatory
      DESCRIPTION "<Definition> This object when set to ON (one) shall cause
            the associated preempt actions to occur unless the actions have
            already been started by the physical preempt input. The preempt
            shall remain active as long as this object is ON or the physical
            preempt input is ON. This object when set to OFF (zero) shall
            cause the physical preempt input to control the associated
            preempt actions. The device shall reset this object to ZERO when
            in BACKUP Mode. A write to this object shall reset the Backup
            timer to ZERO (see unitBackupTime).
      <Object Identifier> 1.3.6.1.4.1.1206.4.2.1.6.3.1.2
      <Object Type> C"
::= { preemptControlEntry  2 }
```

Copy Per MIB Distribution Permission © 2023 AASHTO / ITE / NEMA

#### 5.7.4 Preempt Status

```
preemptStatus OBJECT-TYPE
      SYNTAX INTEGER (0..255)
      ACCESS read-only
      STATUS mandatory
      DESCRIPTION "<Definition> This object defines the preempt number that
            is currently being serviced in the device.
      <Object Identifier> 1.3.6.1.4.1.1206.4.2.1.6.4"
::= { preempt 4 }
```

#### 5.7.5 Maximum Preempt Groups

```
maxPreemptGroups OBJECT-TYPE
      SYNTAX INTEGER (0..2)
      ACCESS read-only
      STATUS mandatory
      DESCRIPTION "<Definition> The Maximum Number of Preempt Groups (8
            Preempt per group) this CU supports. This value is equal to
            TRUNCATE [(maxPreempts + 7) / 8]. This object indicates the
            maximum rows which shall appear in the preemptStatusGroupTable.
      <Object Identifier> 1.3.6.1.4.1.1206.4.2.1.6.5
      <Object Type> S
      <Unit> group"
::= { preempt 5 }
```

#### 5.7.6 Preempt Status Table

```
preemptStatusGroupTable OBJECT-TYPE
      SYNTAX SEQUENCE OF PreemptStatusGroupEntry
      ACCESS not-accessible
      STATUS mandatory
      DESCRIPTION "<Definition> A table containing the CU preempt input
            signal status in groups of eight Preempts. The number of rows in
            this table is equal to the maxPreemptGroups object.
      <TableType> static
      <Object Identifier> 1.3.6.1.4.1.1206.4.2.1.6.6"
::= { preempt 6 }

preemptStatusGroupEntry OBJECT-TYPE
      SYNTAX PreemptStatusGroupEntry
      ACCESS not-accessible
      STATUS mandatory
      DESCRIPTION "<Definition> Preempt input signal status for eight preempt
            inputs.
      <Object Identifier> 1.3.6.1.4.1.1206.4.2.1.6.6.1"
      INDEX { preemptStatusGroupNumber }
::= { preemptStatusGroupTable 1 }

PreemptStatusGroupEntry ::= SEQUENCE {
      preemptStatusGroupNumber INTEGER,
      preemptStatusGroup      INTEGER  }
```

##### 5.7.6.1 Preempt Status Group Number

```
preemptStatusGroupNumber OBJECT-TYPE
      SYNTAX INTEGER (1..255)
```

© 2023 AASHTO / ITE / NEMA Copy Per MIB Distribution Permission

```
      ACCESS read-only
      STATUS mandatory
      DESCRIPTION "<Definition> The Preempt StatusGroup number for objects in
            this row. This value shall not exceed the maxPreemptGroups object
            value.
      <Object Identifier> 1.3.6.1.4.1.1206.4.2.1.6.6.1.1
      <Object Type> S
      <Unit> group"
::= { preemptStatusGroupEntry 1 }
```

#### 5.7.6.2 Preempt Status Group

```
preemptStatusGroup OBJECT-TYPE
      SYNTAX INTEGER (0..255)
      ACCESS read-only
      STATUS mandatory
      DESCRIPTION "<Definition> Preempt Input Signal Status Mask. When a bit
            = 1, a preempt input signal is detected or the
            preemptControlState is ON for that input, and when a bit = 0, no
            preempt input signal is detected and the preemptControlState is
            OFF for that input.
            Bit 7: Preempt # = (preemptStatusGroupNumber * 8)
            Bit 6: Preempt # = (preemptStatusGroupNumber * 8) - 1
            Bit 5: Preempt # = (preemptStatusGroupNumber * 8) - 2
            Bit 4: Preempt # = (preemptStatusGroupNumber * 8) - 3
            Bit 3: Preempt # = (preemptStatusGroupNumber * 8) - 4
            Bit 2: Preempt # = (preemptStatusGroupNumber * 8) - 5
            Bit 1: Preempt # = (preemptStatusGroupNumber * 8) - 6
            Bit 0: Preempt # = (preemptStatusGroupNumber * 8) - 7
      <Object Identifier> 1.3.6.1.4.1.1206.4.2.1.6.6.1.2
      <Object Type> S"
::= { preemptStatusGroupEntry 2 }
```

### 5.7.7 Preempt Queue Delay Table

```
preemptQueueDelayTable OBJECT-TYPE
      SYNTAX SEQUENCE OF PreemptQueueDelayEntry
      ACCESS not-accessible
      STATUS mandatory
      DESCRIPTION "<Definition> A table containing CU detector parameters for
            the queue delay recovery exit strategy. The number of rows in
            this table will not exceed the maxVehicleDetectors object.
      <TableType> static
      <Object Identifier> 1.3.6.1.4.1.1206.4.2.1.6.7"
::={ preempt 7 }

preemptQueueDelayEntry OBJECT-TYPE
      SYNTAX PreemptQueueDelayEntry
      ACCESS not-accessible
      STATUS mandatory
      DESCRIPTION "<Definition> Parameters for a specific CU preempt input if
            the queue delay recovery exit strategy is used.
      <Object Identifier> 1.3.6.1.4.1.1206.4.2.1.6.7.1"
      INDEX { preemptNumber, vehicleDetectorNumber }
::={ preemptQueueDelayTable 1}

PreemptQueueDelayEntry ::= SEQUENCE {
```

 © 2023 AASHTO / ITE / NEMA

```
      preemptDetectorWeight INTEGER }
```

#### 5.7.7.1 Preempt Detector Weight

```
preemptDetectorWeight OBJECT-TYPE
      SYNTAX INTEGER (0..1000)
      ACCESS read-write
      STATUS mandatory
      DESCRIPTION "<Definition> This object defines the relative weight for
            the associated detector when using the detector data to determine
            the queue delay recovery exit strategy from a preempt input. The
            association between the vehicleDetectorNumber and a phase is
            identified by the vehicleDetectorCallPhase.
      <Object Identifier> 1.3.6.1.4.1.1206.4.2.1.6.7.1.1
      <Object Type> P"
::= { preemptQueueDelayEntry 1 }
```

### 5.7.8 Maximum Preemption Gates

```
maxPreemptGates OBJECT-TYPE
      SYNTAX INTEGER (1..255)
      ACCESS read-only
      STATUS mandatory
      DESCRIPTION "<Definition> The maximum number of preempt gates this CU
            supports. This object indicates the maximum rows which shall
            appear in the preemptGateTable.
      <Object Identifier> 1.3.6.1.4.1.1206.4.2.1.6.8
      <Object Type> S
      <Unit> gates"
::= { preempt 8 }
```

### 5.7.9 Preempt Gate Table

```
preemptGateTable OBJECT-TYPE
      SYNTAX SEQUENCE OF PreemptGateEntry
      ACCESS not-accessible
      STATUS mandatory
      DESCRIPTION "<Definition> A table containing the status of the gates
            that may be lowered during a preempt sequence.
      <TableType> static
      <Object Identifier> 1.3.6.1.4.1.1206.4.2.1.6.9"
::= { preempt 9 }

preemptGateEntry OBJECT-TYPE
      SYNTAX PreemptGateEntry
      ACCESS not-accessible
      STATUS mandatory
      DESCRIPTION "<Definition> Gate status for preempt sequences.
      <Object Identifier> 1.3.6.1.4.1.1206.4.2.1.6.9.1"
      INDEX { preemptGateNumber }
::= { preemptGateTable 1 }

PreemptGateEntry ::= SEQUENCE {
      preemptGateNumber INTEGER,
      preemptGateStatus INTEGER,
      preemptGateDescription DisplayString }
```

© 2023 AASHTO / ITE / NEMA Copy Per MIB Distribution Permission

#### 5.7.9.1 Preempt Gate Number

```
preemptGateNumber OBJECT-TYPE
      SYNTAX INTEGER (1..8)
      ACCESS read-only
      STATUS mandatory
      DESCRIPTION "<Definition> The Preempt Gate number for objects in this
            row.
      <Object Identifier> 1.3.6.1.4.1.1206.4.2.1.6.9.1.1
      <Object Type> S"
::= { preemptGateEntry 1 }
```

#### 5.7.9.2 Preempt Gate Status

```
preemptGateStatus OBJECT-TYPE
      SYNTAX INTEGER { unknown(1),
            other(2),
            up(3),
            down(4) }
      ACCESS read-only
      STATUS mandatory
      DESCRIPTION "<Definition> The status of a gate that may be lowered
            during a preempt sequence.
            unknown: The status of unknown or no gate is present
            other: The gate is neither in the locked up or locked down
                  position
            up: The gate is in an up position
            down: The gate is in a down position
      <Object Identifier> 1.3.6.1.4.1.1206.4.2.1.6.9.1.2
      <Object Type> S"
      DEFVAL { unknown }
::= { preemptGateEntry 2 }
```

#### 5.7.9.3 Preempt Gate Description

```
preemptGateDescription OBJECT-TYPE
      SYNTAX DisplayString (SIZE (0..255))
      ACCESS read-write
      STATUS mandatory
      DESCRIPTION "<Definition> A textual string indicating the location and
            perhaps type of gate.
      <Object Identifier> 1.3.6.1.4.1.1206.4.2.1.6.9.1.3
      <Object Type> P"
::= { preemptGateEntry 3 }
```

### 5.8 Ring Parameters

```
ring  OBJECT IDENTIFIER
::= { asc  7 }

-- The ring node contains objects that support ring configuration,
-- status and control functions in the device.
```

 © 2023 AASHTO / ITE / NEMA

### 5.8.1 Maximum Rings

```
maxRings   OBJECT-TYPE
      SYNTAX INTEGER (1..255)
      ACCESS read-only
      STATUS mandatory
      DESCRIPTION "<Definition> The value of this object shall specify the
            maximum number of rings this device supports.
      <Object Identifier> 1.3.6.1.4.1.1206.4.2.1.7.1
      <Object Type> S
      <Unit> ring"
::= { ring 1 }
```

### 5.8.2 Maximum Sequences

```
maxSequences   OBJECT-TYPE
      SYNTAX INTEGER (1..255)
      ACCESS read-only
      STATUS mandatory
      DESCRIPTION "<Definition> The value of this object shall specify the
            maximum number of sequence plans this device supports.
      <Object Identifier> 1.3.6.1.4.1.1206.4.2.1.7.2
      <Object Type> S
      <Unit> sequence"
::= { ring 2 }
```

### 5.8.3 Sequence Table

```
sequenceTable   OBJECT-TYPE
      SYNTAX SEQUENCE OF SequenceEntry
      ACCESS not-accessible
      STATUS mandatory
      DESCRIPTION "<Definition> This table contains all the sequence plans
            for the controller. A sequence plan shall consist of one row for
            each ring that the CU supports. Each row defines the phase
            service order for that ring.
      <TableType> static
      <Object Identifier> 1.3.6.1.4.1.1206.4.2.1.7.3"
::= { ring 3 }

sequenceEntry   OBJECT-TYPE
      SYNTAX SequenceEntry
      ACCESS not-accessible
      STATUS mandatory
      DESCRIPTION "<Definition> Phase Sequence Parameters for an Actuated
            Controller Unit.
      <Object Identifier> 1.3.6.1.4.1.1206.4.2.1.7.3.1"
      INDEX   { sequenceNumber, sequenceRingNumber }
::= { sequenceTable 1 }

SequenceEntry ::= SEQUENCE {
      sequenceNumber          INTEGER,
      sequenceRingNumber      INTEGER,
      sequenceData            OCTET STRING }
```

© 2023 AASHTO / ITE / NEMA Copy Per MIB Distribution Permission

#### 5.8.3.1 Sequence Number

```
sequenceNumber  OBJECT-TYPE
      SYNTAX INTEGER (1..255)
      ACCESS  read-only
      STATUS  mandatory
      DESCRIPTION "<Definition> This number identifies a sequence plan. Each
            row of the table contains the phase sequence for a ring. A
            sequence plan shall consist of one row for each ring that defines
            the phase sequences for that ring.
      <Object Identifier> 1.3.6.1.4.1.1206.4.2.1.7.3.1.1
      <Object Type> S
      <Unit> sequence"
::= { sequenceEntry 1 }
```

#### 5.8.3.2 Sequence Ring Number

```
sequenceRingNumber  OBJECT-TYPE
      SYNTAX INTEGER (1..255)
      ACCESS  read-only
      STATUS  mandatory
      DESCRIPTION "<Definition> This number identifies the ring number this
            phase sequence applies to.
      <Object Identifier> 1.3.6.1.4.1.1206.4.2.1.7.3.1.2
      <Object Type> S
      <Unit> ring"
::= { sequenceEntry 2 }
```

#### 5.8.3.3 Sequence Data

```
sequenceData   OBJECT-TYPE
      SYNTAX OCTET STRING
      ACCESS read-write
      STATUS mandatory
      DESCRIPTION "<Definition> Each octet is a Phase Number (binary value)
            within the associated ring number. The phase number value shall
            not exceed the maxPhases object value. The order of phase numbers
            determines the phase sequence for the ring. The phase numbers
            shall not be ordered in a manner that would violate the
            Consistency Checks defined in Section 4.3.2.
      <Object Identifier> 1.3.6.1.4.1.1206.4.2.1.7.3.1.3
      <Object Type> P2"
::= { sequenceEntry 3 }
```

### 5.8.4 Maximum Ring Control Groups

```
maxRingControlGroups   OBJECT-TYPE
      SYNTAX INTEGER (1..255)
      ACCESS read-only
      STATUS mandatory
      DESCRIPTION "<Definition> The maximum number of Ring Control Groups (8
            rings per group) this Actuated Controller Unit supports. This
            value is equal to TRUNCATE[(maxRings + 7) / 8]. This object
            indicates the maximum rows which shall appear in the
            ringControlGroupTable object.
      <Object Identifier> 1.3.6.1.4.1.1206.4.2.1.7.4
      <Object Type> S
```

Copy Per MIB Distribution Permission © 2023 AASHTO / ITE / NEMA

```
      <Unit> group"
::= { ring 4 }
```

### 5.8.5 Ring Control Group Table

```
ringControlGroupTable   OBJECT-TYPE
      SYNTAX SEQUENCE OF RingControlGroupEntry
      ACCESS not-accessible
      STATUS mandatory
      DESCRIPTION "<Definition> A table containing Actuated Controller Unit
            Ring Control in groups of eight rings. The number of rows in this
            table is equal to the maxRingControlGroups object.
      <TableType> static
      <<Object Identifier> 1.3.6.1.4.1.1206.4.2.1.7.5"
::= { ring 5 }

ringControlGroupEntry   OBJECT-TYPE
      SYNTAX RingControlGroupEntry
      ACCESS not-accessible
      STATUS mandatory
      DESCRIPTION "<Definition> Ring Control for eight Actuated Controller
            Unit rings.
      <Object Identifier> 1.3.6.1.4.1.1206.4.2.1.7.5.1"
      INDEX   { ringControlGroupNumber }
::= { ringControlGroupTable 1 }

RingControlGroupEntry ::= SEQUENCE {
      ringControlGroupNumber        INTEGER,
      ringControlGroupStopTime      INTEGER,
      ringControlGroupForceOff      INTEGER,
      ringControlGroupMax2          INTEGER,
      ringControlGroupMaxInhibit    INTEGER,
      ringControlGroupPedRecycle    INTEGER,
      ringControlGroupRedRest       INTEGER,
      ringControlGroupOmitRedClear  INTEGER,
      ringControlGroupMax3          INTEGER }
```

#### 5.8.5.1 Ring Control Group Number

```
ringControlGroupNumber   OBJECT-TYPE
      SYNTAX INTEGER (1..255)
      ACCESS read-only
      STATUS mandatory
      DESCRIPTION "<Definition> The Ring Control Group number for objects in
            this row. This value shall not exceed the maxRingControlGroups
            object value.
      <Object Identifier> 1.3.6.1.4.1.1206.4.2.1.7.5.1.1
      <Object Type> S
      <Unit> group"
::= { ringControlGroupEntry 1 }
```

#### 5.8.5.2 Ring Stop Time Control

```
ringControlGroupStopTime   OBJECT-TYPE
      SYNTAX INTEGER (0..255)
      ACCESS read-write
```

© 2023 AASHTO / ITE / NEMA Copy Per MIB Distribution Permission

```
      STATUS mandatory
      DESCRIPTION "<Definition> This object is used to allow a remote entity
            to stop timing in the device. The device shall
            activate/deactivate the System Stop Time control for a ring
            according to the respective bit value as follows:
            bit = 0 - deactivate the ring control
            bit = 1 - activate the ring control
            Bit 7: Ring # = (ringControlGroupNumber * 8)
            Bit 6: Ring # = (ringControlGroupNumber * 8) - 1
            Bit 5: Ring # = (ringControlGroupNumber * 8) - 2
            Bit 4: Ring # = (ringControlGroupNumber * 8) - 3
            Bit 3: Ring # = (ringControlGroupNumber * 8) - 4
            Bit 2: Ring # = (ringControlGroupNumber * 8) - 5
            Bit 1: Ring # = (ringControlGroupNumber * 8) - 6
            Bit 0: Ring # = (ringControlGroupNumber * 8) - 7
            The device shall reset this object to ZERO when in BACKUP Mode. A
            write to this object shall reset the Backup timer to ZERO (see
            unitBackupTime).
      <Object Identifier> 1.3.6.1.4.1.1206.4.2.1.7.5.1.2
      <Object Type> C"
      REFERENCE "NEMA TS 2 Clause 3.5.4.1.6"
::= { ringControlGroupEntry 2 }
```

#### 5.8.5.3 Ring Force Off Control

```
ringControlGroupForceOff   OBJECT-TYPE
      SYNTAX INTEGER (0..255)
      ACCESS read-write
      STATUS mandatory
      DESCRIPTION "<Definition> This object is used to allow a remote entity
            to terminate phases via a force off command in the device. The
            device shall activate/deactivate the System Force Off control for
            a ring according to the respective bit value as follows:
            bit = 0 - deactivate the ring control
            bit = 1 - activate the ring control
            Bit 7: Ring # = (ringControlGroupNumber * 8)
            Bit 6: Ring # = (ringControlGroupNumber * 8) - 1
            Bit 5: Ring # = (ringControlGroupNumber * 8) - 2
            Bit 4: Ring # = (ringControlGroupNumber * 8) - 3
            Bit 3: Ring # = (ringControlGroupNumber * 8) - 4
            Bit 2: Ring # = (ringControlGroupNumber * 8) - 5
            Bit 1: Ring # = (ringControlGroupNumber * 8) - 6
            Bit 0: Ring # = (ringControlGroupNumber * 8) - 7
            The device shall reset this object to ZERO when in BACKUP Mode. A
            write to this object shall reset the Backup timer to ZERO (see
            unitBackupTime).
      <Object Identifier> 1.3.6.1.4.1.1206.4.2.1.7.5.1.3
      <Object Type> C"
      REFERENCE "NEMA TS 2 Clause 3.5.4.1.1"
::= { ringControlGroupEntry 3 }
```

#### 5.8.5.4 Ring Max 2 Control

```
ringControlGroupMax2   OBJECT-TYPE
      SYNTAX INTEGER (0..255)
      ACCESS read-write
      STATUS mandatory
```

 © 2023 AASHTO / ITE / NEMA

```
      DESCRIPTION "<Definition> This object is used to allow a remote entity
            to request Maximum 2 timings in the device. The device shall
            activate/deactivate the System Maximum 2 control for a ring
            according to the respective bit value as follows:
            bit = 0 - deactivate the ring control
            bit = 1 - activate the ring control
            Bit 7: Ring # = (ringControlGroupNumber * 8)
            Bit 6: Ring # = (ringControlGroupNumber * 8) - 1
            Bit 5: Ring # = (ringControlGroupNumber * 8) - 2
            Bit 4: Ring # = (ringControlGroupNumber * 8) - 3
            Bit 3: Ring # = (ringControlGroupNumber * 8) - 4
            Bit 2: Ring # = (ringControlGroupNumber * 8) - 5
            Bit 1: Ring # = (ringControlGroupNumber * 8) - 6
            Bit 0: Ring # = (ringControlGroupNumber * 8) - 7
            The device shall reset this object to ZERO when in BACKUP Mode. A
            write to this object shall reset the Backup timer to ZERO (see
            unitBackupTime).
      <Object Identifier> 1.3.6.1.4.1.1206.4.2.1.7.5.1.4
      <Object Type> C"
      REFERENCE "NEMA TS 2 Clause 3.5.4.1.7"
::= { ringControlGroupEntry 4 }
```

#### 5.8.5.5 Ring Max Inhibit Control

```
ringControlGroupMaxInhibit   OBJECT-TYPE
      SYNTAX INTEGER (0..255)
      ACCESS read-write
      STATUS mandatory
      DESCRIPTION
            "<Definition> This object is used to allow a remote entity to
            request internal maximum timings be inhibited in the device. The
            device shall activate/deactivate the System Max Inhibit control
            for a ring according to the respective bit value as follows:
            bit = 0 - deactivate the ring control
            bit = 1 - activate the ring control
            Bit 7: Ring # = (ringControlGroupNumber * 8)
            Bit 6: Ring # = (ringControlGroupNumber * 8) - 1
            Bit 5: Ring # = (ringControlGroupNumber * 8) - 2
            Bit 4: Ring # = (ringControlGroupNumber * 8) - 3
            Bit 3: Ring # = (ringControlGroupNumber * 8) - 4
            Bit 2: Ring # = (ringControlGroupNumber * 8) - 5
            Bit 1: Ring # = (ringControlGroupNumber * 8) - 6
            Bit 0: Ring # = (ringControlGroupNumber * 8) - 7
            The device shall reset this object to ZERO when in BACKUP Mode. A
            write to this object shall reset the Backup timer to ZERO (see
            unitBackupTime).
      <Object Identifier> 1.3.6.1.4.1.1206.4.2.1.7.5.1.5
      <Object Type> C"
      REFERENCE "NEMA TS 2 Clause 3.5.4.1.3"
::= { ringControlGroupEntry 5 }
```

#### 5.8.5.6 Ring Ped Recycle Control

```
ringControlGroupPedRecycle   OBJECT-TYPE
      SYNTAX INTEGER (0..255)
      ACCESS read-write
      STATUS mandatory
```

© 2023 AASHTO / ITE / NEMA Copy Per MIB Distribution Permission

```
      DESCRIPTION "<Definition> This object is used to allow a remote entity
            to request a pedestrian recycle in the device. The device shall
            activate/deactivate the System Ped Recycle control for a ring
            according to the respective bit value as follows:
            bit = 0 - deactivate the ring control
            bit = 1 - activate the ring control
            Bit 7: Ring # = (ringControlGroupNumber * 8)
            Bit 6: Ring # = (ringControlGroupNumber * 8) - 1
            Bit 5: Ring # = (ringControlGroupNumber * 8) - 2
            Bit 4: Ring # = (ringControlGroupNumber * 8) - 3
            Bit 3: Ring # = (ringControlGroupNumber * 8) - 4
            Bit 2: Ring # = (ringControlGroupNumber * 8) - 5
            Bit 1: Ring # = (ringControlGroupNumber * 8) - 6
            Bit 0: Ring # = (ringControlGroupNumber * 8) - 7
            The device shall reset this object to ZERO when in BACKUP Mode. A
            write to this object shall reset the Backup timer to ZERO (see
            unitBackupTime).
      <Object Identifier> 1.3.6.1.4.1.1206.4.2.1.7.5.1.6
      <Object Type> C"
      REFERENCE "NEMA TS 2 Clause 3.5.4.1.5"
::= { ringControlGroupEntry 6 }
```

#### 5.8.5.7 Ring Red Rest Control

```
ringControlGroupRedRest   OBJECT-TYPE
      SYNTAX INTEGER (0..255)
      ACCESS read-write
      STATUS mandatory
      DESCRIPTION "<Definition> This object is used to allow a remote entity
            to request red rest in the device. The device shall
            activate/deactivate the System Red Rest control for a ring
            according to the respective bit value as follows:
            bit = 0 - deactivate the ring control
            bit = 1 - activate the ring control
            Bit 7: Ring # = (ringControlGroupNumber * 8)
            Bit 6: Ring # = (ringControlGroupNumber * 8) - 1
            Bit 5: Ring # = (ringControlGroupNumber * 8) - 2
            Bit 4: Ring # = (ringControlGroupNumber * 8) - 3
            Bit 3: Ring # = (ringControlGroupNumber * 8) - 4
            Bit 2: Ring # = (ringControlGroupNumber * 8) - 5
            Bit 1: Ring # = (ringControlGroupNumber * 8) - 6
            Bit 0: Ring # = (ringControlGroupNumber * 8) - 7
            The device shall reset this object to ZERO when in BACKUP Mode. A
            write to this object shall reset the Backup timer to ZERO (see
            unitBackupTime).
      <Object Identifier> 1.3.6.1.4.1.1206.4.2.1.7.5.1.7
      <Object Type> C"
      REFERENCE "NEMA TS 2 Clause 3.5.4.1.2"
::= { ringControlGroupEntry 7 }
```

#### 5.8.5.8 Ring Omit Red Control

```
ringControlGroupOmitRedClear   OBJECT-TYPE
      SYNTAX INTEGER (0..255)
      ACCESS read-write
      STATUS mandatory
```

 © 2023 AASHTO / ITE / NEMA

```
      DESCRIPTION "<Definition> This object is used to allow a remote entity
            to omit red clearances in the device. The device shall
            activate/deactivate the System Omit Red Clear control for a ring
            according to the respective bit value as follows:
            bit = 0 - deactivate the ring control
            bit = 1 - activate the ring control
            Bit 7: Ring # = (ringControlGroupNumber * 8)
            Bit 6: Ring # = (ringControlGroupNumber * 8) - 1
            Bit 5: Ring # = (ringControlGroupNumber * 8) - 2
            Bit 4: Ring # = (ringControlGroupNumber * 8) - 3
            Bit 3: Ring # = (ringControlGroupNumber * 8) - 4
            Bit 2: Ring # = (ringControlGroupNumber * 8) - 5
            Bit 1: Ring # = (ringControlGroupNumber * 8) - 6
            Bit 0: Ring # = (ringControlGroupNumber * 8) - 7
            The device shall reset this object to ZERO when in BACKUP Mode. A
            write to this object shall reset the Backup timer to ZERO (see
            unitBackupTime).
      <Object Identifier> 1.3.6.1.4.1.1206.4.2.1.7.5.1.8
      <Object Type> C"
      REFERENCE "NEMA TS 2 Clause 3.5.4.1.4"
::= { ringControlGroupEntry 8 }
```

#### 5.8.5.9 Ring Max 3 Control

```
ringControlGroupMax3   OBJECT-TYPE
      SYNTAX INTEGER (0..255)
      ACCESS read-write
      STATUS mandatory
      DESCRIPTION "<Definition> This object is used to allow a remote entity
            to request Maximum 3 timings in the device. The device shall
            activate/deactivate the System Maximum 3 control for a ring
            according to the respective bit value as follows:
            bit = 0 - deactivate the ring control
            bit = 1 - activate the ring control
            Bit 7: Ring # = (ringControlGroupNumber * 8)
            Bit 6: Ring # = (ringControlGroupNumber * 8) - 1
            Bit 5: Ring # = (ringControlGroupNumber * 8) - 2
            Bit 4: Ring # = (ringControlGroupNumber * 8) - 3
            Bit 3: Ring # = (ringControlGroupNumber * 8) - 4
            Bit 2: Ring # = (ringControlGroupNumber * 8) - 5
            Bit 1: Ring # = (ringControlGroupNumber * 8) - 6
            Bit 0: Ring # = (ringControlGroupNumber * 8) - 7
            The device shall reset this object to ZERO when in BACKUP Mode.
            A write to this object shall reset the Backup timer to ZERO (see
            unitBackupTime).
      <Object Identifier> 1.3.6.1.4.1.1206.4.2.1.7.5.1.9
      <Object Type> C"
::= { ringControlGroupEntry 9 }
```

### 5.8.6 Ring Status Table

```
ringStatusTable   OBJECT-TYPE
      SYNTAX SEQUENCE OF RingStatusEntry
      ACCESS not-accessible
      STATUS mandatory
```

© 2023 AASHTO / ITE / NEMA Copy Per MIB Distribution Permission

```
      DESCRIPTION "<Definition> A table containing Actuated Controller Unit
            Ring Status. The number of rows in this table is equal to the
            maxRings object.
      <TableType> static
      <Object Identifier> 1.3.6.1.4.1.1206.4.2.1.7.6"
::= { ring 6 }

ringStatusEntry   OBJECT-TYPE
      SYNTAX RingStatusEntry
      ACCESS not-accessible
      STATUS mandatory
      DESCRIPTION "<Definition> Ring Status for an Actuated Controller Unit
            ring.
      <Object Identifier> 1.3.6.1.4.1.1206.4.2.1.7.6.1"
      INDEX   { sequenceRingNumber }
::= { ringStatusTable 1 }

RingStatusEntry ::= SEQUENCE {
      ringStatus INTEGER }
```

#### 5.8.6.1 Ring Status

```
ringStatus OBJECT-TYPE
      SYNTAX INTEGER (0..255)
      ACCESS read-only
      STATUS mandatory
      DESCRIPTION "<Definition> The Ring Status for this ring.
            Bit 7: Reserved (always zero)
            Bit 6: Reserved (always zero)
            Bit 5: Force Off - When bit = 1, the active phase in the ring was
                  terminated by Force Off
            Bit 4: Max Out - When bit = 1, the active phase in the ring was
                  terminated by Max Out
            Bit 3: Gap Out - When bit = 1, the active phase in the ring was
                  terminated by Gap Out
            Bit 2: Coded Status Bit C
            Bit 1: Coded Status Bit B
            Bit 0: Coded Status Bit A
            +======+=====+=====+=====+===============+
            | Code |    Bit States   | State         |
            |  ##  |  A  |  B  |  C  | Names         |
            +======+=====+=====+=====+===============+
            |   0  |  0  |  0  |  0  | Min Green     |
            |   1  |  1  |  0  |  0  | Extension     |
            |   2  |  0  |  1  |  0  | Maximum |
            |   3  |  1  |  1  |  0  | Green Rest    |
            |   4  |  0  |  0  |  1  | Yellow Change |
            |   5  |  1  |  0  |  1  | Red Clearance |
            |   6  |  0  |  1  |  1  | Red Rest      |
            |   7  |  1  |  1  |  1  | Undefined     |
            +======+=====+=====+=====+===============+
            NEMA TS 2 Clause 3.5.4.2 provides further definition of Coded
            Status Bits.
      <Object Identifier> 1.3.6.1.4.1.1206.4.2.1.7.6.1.1
      <Object Type> S"
::= { ringStatusEntry 1 }
```

 © 2023 AASHTO / ITE / NEMA

### 5.9 Channel Parameters

```
channel OBJECT IDENTIFIER
::= { asc 8 }

--This defines a node for supporting channel objects.
```

#### 5.9.1 Maximum Channels

```
maxChannels   OBJECT-TYPE
      SYNTAX INTEGER (1..255)
      ACCESS read-only
      STATUS mandatory
      DESCRIPTION "<Definition> The Maximum Number of Channels this Actuated
            Controller Unit supports. This object indicates the maximum rows
            which shall appear in the channelTable object.
      <Object Identifier> 1.3.6.1.4.1.1206.4.2.1.8.1
      <Object Type> S
      <Unit> channel"
::= { channel 1 }
```

#### 5.9.2 Channel Table

```
channelTable   OBJECT-TYPE
      SYNTAX SEQUENCE OF ChannelEntry
      ACCESS not-accessible
      STATUS mandatory
      DESCRIPTION "<Definition> A table containing Actuated Controller Unit
            channel parameters. The number of rows in this table is equal to
            the maxChannels object.
      <TableType> static
      <Object Identifier> 1.3.6.1.4.1.1206.4.2.1.8.2"
::= { channel 2 }

channelEntry   OBJECT-TYPE
      SYNTAX ChannelEntry
      ACCESS not-accessible
      STATUS mandatory
      DESCRIPTION "<Definition> Parameters for a specific Actuated Controller
            Unit channel.
      <Object Identifier> 1.3.6.1.4.1.1206.4.2.1.8.2.1"
      INDEX   { channelNumber }
::= { channelTable 1 }

ChannelEntry ::= SEQUENCE {
      channelNumber     INTEGER,
      channelControlSource    INTEGER,
      channelControlType      INTEGER,
      channelFlash      INTEGER,
      channelDim        INTEGER,
      channelGreenType  INTEGER,
      channelGreenIncluded    OCTET STRING,
      channelIntersectionId   INTEGER }
```

##### 5.9.2.1 Channel Number

```
channelNumber   OBJECT-TYPE
```

© 2023 AASHTO / ITE / NEMA 

```
      SYNTAX INTEGER (1..255)
      ACCESS read-only
      STATUS mandatory
      DESCRIPTION "<Definition> The channel number for objects in this row.
            This value shall not exceed the maxChannels object value.
      <Object Identifier> 1.3.6.1.4.1.1206.4.2.1.8.2.1.1
      <Object Type> S
      <Unit> channel"
::= { channelEntry 1 }
```

#### 5.9.2.2 Channel Control Source Parameter

```
channelControlSource   OBJECT-TYPE
      SYNTAX INTEGER (0..255)
      ACCESS read-write
      STATUS mandatory
      DESCRIPTION "<Definition> This object defines the channel control
            source (which Phase or Overlap). The value shall not exceed
            maxPhases or maxOverlaps as determined by channelControlType
            object:
            Value 00 = No Control (Not In Use)
            Value 01 = Phase 01 or Overlap A
            Value 02 = Phase 02 or Overlap B
            ||
            Value 15 = Phase 15 or Overlap O
            Value 16 = Phase 16 or Overlap P
            etc.
      <Object Identifier> 1.3.6.1.4.1.1206.4.2.1.8.2.1.2
      <Object Type> P"
::= { channelEntry 2 }
```

#### 5.9.2.3 Channel Control Type Parameter

```
channelControlType   OBJECT-TYPE
      SYNTAX INTEGER { other (1),
            phaseVehicle (2),
            phasePedestrian (3),
            overlap (4),
            pedOverlap (5),
            queueJump (6) }
      ACCESS read-write
      STATUS mandatory
      DESCRIPTION "<Definition> This object defines the channel control type
            (Vehicle Phase, Pedestrian Phase, or Overlap):
            other: The channel controls an other type of display.
            phaseVehicle: The channel controls a vehicle phase display. Also
            valid for bicycle phases and transit phases.
            phasePedestrian: The channel controls a pedestrian phase display.
            overlap: The channel controls an overlap display, which might
            include flashing yellow arrows, flashing red arrows, vehicle
            overlaps, bicycle overlaps and transit overlaps.
            pedOverlap: The channel controls an overlap for pedestrian
            display.
            queueJump: The channel controls a queue jump display typically
            used for transit priority
      <Object Identifier> 1.3.6.1.4.1.1206.4.2.1.8.2.1.3
      <Object Type> P"
```

 © 2023 AASHTO / ITE / NEMA

```
::= { channelEntry 3 }
```

#### 5.9.2.4 Channel Flash Parameter

```
channelFlash   OBJECT-TYPE
      SYNTAX INTEGER (0..255)
      ACCESS read-write
      STATUS mandatory
      DESCRIPTION "<Definition> This object defines the channel state during
            Automatic Flash.
            Bit 7: Reserved
            Bit 6: Reserved
            Bit 5: Reserved
            Bit 4: Reserved
            Bit 3: Flash Alternate Half Hertz
                  Bit=0: Off/Disabled & Bit=1: On/Enabled
            Bit 2: Flash Red
                  Bit=0: Off/Red Dark & Bit=1: On/Flash Red
            Bit 1: Flash Yellow
                  Bit=0: Off/Yellow Dark & Bit=1: On/Flash Yellow
            Bit 0: Reserved
            A SET of both bits 1 & 2 shall result in bit 1=0 and bit 2=1. A
            SET of a 'reserved' bit to a value other than zero (0) shall
            return a badValue(3) error.
      <Object Identifier> 1.3.6.1.4.1.1206.4.2.1.8.2.1.4
      <Object Type> P"
::= { channelEntry 4 }
```

#### 5.9.2.5 Channel Dim Parameter

```
channelDim   OBJECT-TYPE
      SYNTAX INTEGER (0..255)
      ACCESS read-write
      STATUS mandatory
      DESCRIPTION "<Definition> This object defines the channel state during
            Dimming. Dimming shall be accomplished by the elimination of
            alternate one-half segments from the AC sinusoid applied to the
            field terminals.
            Bit 7: Reserved
            Bit 6: Reserved
            Bit 5: Reserved
            Bit 4: Reserved
            Bit 3: Dim Alternate Half Line Cycle
                  Bit=0: Off/+ half cycle & Bit=1: On/- half cycle
            Bit 2: Dim Red
                  Bit=0: Off/Red Not Dimmed & Bit=1: On/Dimmed Red
            Bit 1: Dim Yellow
                  Bit=0: Off / Yellow Not Dimmed & Bit=1: On / Dimmed Yellow
            Bit 0: Dim Green
                  Bit=0: Off / Green Not Dimmed & Bit=1: On / Dimmed Green
            A SET of a 'reserved' bit to a value other than zero (0) shall
            return a badValue(3) error.
      <Object Identifier> 1.3.6.1.4.1.1206.4.2.1.8.2.1.5
      <Object Type> P"
::= { channelEntry 5 }
```

© 2023 AASHTO / ITE / NEMA 

#### 5.9.2.6 Channel Movement Type

```
channelGreenType   OBJECT-TYPE
      SYNTAX   INTEGER { other (1),
            protected (2),
            permissive (3),
            flashYellow (4),
            flashRed (5) }
      ACCESS   read-write
      STATUS   deprecated
      DESCRIPTION "<Definition> This object defines the signalState for this
            channel when the channel output is Green. This object is used to
            support the generation of SPaT data.
            other: the allowed movement controlled by this channel is not
            defined by this standard.
            protected:   indicates that at least a portion of the green
            movement occurs in protected mode.
            permissive: indicates that the green movement occurs in
            permissive mode, that is, any turns are permitted to be made only
            after yielding to pedestrians and/or any opposing traffic.
            flashYellow: indicates that a vehicle may proceed but with
            caution after yielding to pedestrians and/or any conflicting
            traffic. Includes flashing yellow arrows.
            flashRed: indicates that a vehicle may proceed after stopping and
            yielding to pedestrians and/or any conflicting traffic. Includes
            flashing red arrows.
            Note that there is a similar object called
            movementManeuverGreenType.
      <Object Identifier> 1.3.6.1.4.1.1206.4.2.1.8.2.1.6
      <Object Type> P"
::= { channelEntry 6 }
```

#### 5.9.2.7 Channel Included Movements

```
channelGreenIncluded   OBJECT-TYPE
      SYNTAX   OCTET STRING
      ACCESS   read-write
      STATUS   deprecated
      DESCRIPTION "<Definition> If the channelGreenType for this channel is
            'protected (2)', this object is used to indicate if and when this
            movement is in permissive mode. This object is used to support
            the generation of SPaT data and defines the signalState (See
            signalState) for the movements associated with this channel only
            IF the channelGreenType for this channel is 'protected (2)'. Each
            octet in the octet string represents a conflicting or opposing
            channelNumber, which if the status for any octet in the octet
            string is NOT Channel Red or is Dark, then the signalState for
            the movement is 'permissive-Movement-Allowed (5)' when the status
            for this channel is channel Green. Otherwise, the signalState for
            the movement is 'protected-Movement-Allowed (6)' when the status
            for this channel is channel Green.

            If channelGreenType in this row is not 'protected (2)', then this
            object value is ignored.

            It is assumed that a clearance state following a signalState of
            'permissive movement allowed' will be a signalState of
```

 © 2023 AASHTO / ITE / NEMA

```
            'permissive clearance', and a clearance state following a
            signalState of 'protected movement allowed' will be a signalState
            of 'protected movement allowed'.

            For example, assume channelNumber 1 represents a northbound left
            turn, while channelNumber 2 is a southbound through movement. A
            channelGreenType.1 of 'protected (2)' and channelGreenIncluded.1
            of '02' indicates that if the status of channelNumber 2 is NOT
            Channel Red or is dark, then signalState for the movement
            associated with channelNumber.1 is 'permissive-Movement-Allowed
            (5)' when the status for channelNumber.1 is channel Green.
            Otherwise, the signalState for the movement associated with
            channelNumber.1 is 'protected-Movement-Allowed (6)' when the
            status for this channel is channel Green.
      <Object Identifier> 1.3.6.1.4.1.1206.4.2.1.8.2.1.7
      <Object Type> P"
::= { channelEntry 7 }
```

#### 5.9.2.8 Channel Intersection Identifier

```
channelIntersectionId   OBJECT-TYPE
      SYNTAX   INTEGER (0..65535)
      ACCESS   read-write
      STATUS   deprecated
      DESCRIPTION "<Definition> To support SAE J2735, this object is used to
            support the exchange of SPaT data and contains the (regionally)
            unique identifier of the intersection that the channel output is
            associated with. It is expected that this same identifier will be
            broadcasted in a MAP data message that describes the roadway
            geometry configuration of this intersection.
      <Object Identifier> 1.3.6.1.4.1.1206.4.2.1.8.2.1.8
      <Object Type> P"
      REFERENCE "SAE J2735 DE_IntersectionID"
::= { channelEntry 8 }
```

### 5.9.3 Maximum Channel Status Groups

```
maxChannelStatusGroups   OBJECT-TYPE
      SYNTAX INTEGER (1..255)
      ACCESS read-only
      STATUS mandatory
      DESCRIPTION "<Definition> The maximum number of Channel Status Groups
            (8 channels per group) this Actuated Controller Unit supports.
            This value is equal to TRUNCATE [(maxChannels + 7) / 8]. This
            object indicates the maximum rows which shall appear in the
            channelStatusGroupTable object.
      <Object Identifier> 1.3.6.1.4.1.1206.4.2.1.8.3
      <Object Type> S
      <Unit> group"
::= { channel 3 }
```

### 5.9.4 Channel Status Group Table

```
channelStatusGroupTable   OBJECT-TYPE
      SYNTAX SEQUENCE OF ChannelStatusGroupEntry
      ACCESS not-accessible
```

© 2023 AASHTO / ITE / NEMA Copy Per MIB Distribution Permission

```
      STATUS mandatory
      DESCRIPTION "<Definition> A table containing Actuated Controller Unit
            channel output (Red, Yellow, & Green) status in groups of eight
            channels. The number of rows in this table is equal to the
            maxChannelStatusGroups object.
      <TableType> static
      <Object Identifier> 1.3.6.1.4.1.1206.4.2.1.8.4"
::= { channel 4 }

channelStatusGroupEntry   OBJECT-TYPE
      SYNTAX ChannelStatusGroupEntry
      ACCESS not-accessible
      STATUS mandatory
      DESCRIPTION "<Definition> Red, Yellow, & Green Output Status for eight
            Actuated Controller Unit channels.
      <Object Identifier> 1.3.6.1.4.1.1206.4.2.1.8.4.1"
      INDEX   { channelStatusGroupNumber }
::= { channelStatusGroupTable 1 }

ChannelStatusGroupEntry ::= SEQUENCE {
      channelStatusGroupNumber      INTEGER,
      channelStatusGroupReds        INTEGER,
      channelStatusGroupYellows     INTEGER,
      channelStatusGroupGreens      INTEGER }
```

#### 5.9.4.1 Channel Status Group Number

```
channelStatusGroupNumber   OBJECT-TYPE
      SYNTAX INTEGER (1..255)
      ACCESS read-only
      STATUS mandatory
      DESCRIPTION "<Definition> The channelStatusGroup number for objects in
            this row. This value shall not exceed the maxChannelStatusGroups
            object value.
      <Object Identifier> 1.3.6.1.4.1.1206.4.2.1.8.4.1.1
      <Object Type> S
      <Unit> group"
::= { channelStatusGroupEntry 1 }
```

#### 5.9.4.2 Channel Status Group Reds

```
channelStatusGroupReds   OBJECT-TYPE
      SYNTAX INTEGER (0..255)
      ACCESS read-only
      STATUS mandatory
      DESCRIPTION "<Definition> Channel Red Output Status Mask, when a bit=1,
            the Channel Red is currently active. When a bit=0, the Channel
            Red is NOT currently active.
            Bit 7: Channel # = (channelStatusGroupNumber * 8)
            Bit 6: Channel # = (channelStatusGroupNumber * 8) - 1
            Bit 5: Channel # = (channelStatusGroupNumber * 8) - 2
            Bit 4: Channel # = (channelStatusGroupNumber * 8) - 3
            Bit 3: Channel # = (channelStatusGroupNumber * 8) - 4
            Bit 2: Channel # = (channelStatusGroupNumber * 8) - 5
            Bit 1: Channel # = (channelStatusGroupNumber * 8) - 6
            Bit 0: Channel # = (channelStatusGroupNumber * 8) - 7
      <Object Identifier> 1.3.6.1.4.1.1206.4.2.1.8.4.1.2
```

 © 2023 AASHTO / ITE / NEMA

```
      <Object Type> S"
::= { channelStatusGroupEntry 2 }
```

#### 5.9.4.3 Channel Status Group Yellows

```
channelStatusGroupYellows   OBJECT-TYPE
      SYNTAX INTEGER (0..255)
      ACCESS read-only
      STATUS mandatory
      DESCRIPTION "<Definition> Channel Yellow Output Status Mask, when a
            bit=1, the Channel Yellow is currently active. When a bit=0, the
            Channel Yellow is NOT currently active.
            Bit 7: Channel # = (channelStatusGroupNumber * 8)
            Bit 6: Channel # = (channelStatusGroupNumber * 8) - 1
            Bit 5: Channel # = (channelStatusGroupNumber * 8) - 2
            Bit 4: Channel # = (channelStatusGroupNumber * 8) - 3
            Bit 3: Channel # = (channelStatusGroupNumber * 8) - 4
            Bit 2: Channel # = (channelStatusGroupNumber * 8) - 5
            Bit 1: Channel # = (channelStatusGroupNumber * 8) - 6
            Bit 0: Channel # = (channelStatusGroupNumber * 8) - 7
      <Object Identifier> 1.3.6.1.4.1.1206.4.2.1.8.4.1.3
      <Object Type> S"
::= { channelStatusGroupEntry 3 }
```

#### 5.9.4.4 Channel Status Group Greens

```
channelStatusGroupGreens   OBJECT-TYPE
      SYNTAX INTEGER (0..255)
      ACCESS read-only
      STATUS mandatory
      DESCRIPTION "<Definition> Channel Green Output Status Mask, when a
            bit=1, the Channel Green is currently active. When a bit=0, the
            Channel Green is NOT currently active.
            Bit 7: Channel # = (channelStatusGroupNumber * 8)
            Bit 6: Channel # = (channelStatusGroupNumber * 8) - 1
            Bit 5: Channel # = (channelStatusGroupNumber * 8) - 2
            Bit 4: Channel # = (channelStatusGroupNumber * 8) - 3
            Bit 3: Channel # = (channelStatusGroupNumber * 8) - 4
            Bit 2: Channel # = (channelStatusGroupNumber * 8) - 5
            Bit 1: Channel # = (channelStatusGroupNumber * 8) - 6
            Bit 0: Channel # = (channelStatusGroupNumber * 8) - 7
      <Object Identifier> 1.3.6.1.4.1.1206.4.2.1.8.4.1.4
      <Object Type> S"
::= { channelStatusGroupEntry 4 }
```

### 5.10 Overlap Parameters

```
overlap   OBJECT IDENTIFIER
::= { asc 9 }

-- This node contains objects that configure, monitor and
-- control overlap functions.
```

#### 5.10.1 Maximum Overlaps

```
maxOverlaps   OBJECT-TYPE
```

© 2023 AASHTO / ITE / NEMA 

```
      SYNTAX INTEGER (1..255)
      ACCESS read-only
      STATUS mandatory
      DESCRIPTION "<Definition> The Maximum Number of Overlaps this Actuated
            Controller Unit supports. This object indicates the maximum
            number of rows which shall appear in the overlapTable object.
      <Object Identifier> 1.3.6.1.4.1.1206.4.2.1.9.1
      <Object Type> S
      <Unit> overlap"
::= { overlap 1 }
```

### 5.10.2 Overlap Table

```
overlapTable   OBJECT-TYPE
      SYNTAX SEQUENCE OF OverlapEntry
      ACCESS not-accessible
      STATUS mandatory
      DESCRIPTION "<Definition> A table containing Actuated Controller Unit
            overlap parameters. The number of rows in this table is equal to
            the maxOverlaps object.
      <TableType> static
      <Object Identifier> 1.3.6.1.4.1.1206.4.2.1.9.2"
::= { overlap 2 }

overlapEntry   OBJECT-TYPE
      SYNTAX OverlapEntry
      ACCESS not-accessible
      STATUS mandatory
      DESCRIPTION "<Definition> Parameters for a specific Actuated Controller
            Unit overlap.
      <Object Identifier> 1.3.6.1.4.1.1206.4.2.1.9.2.1"
      INDEX   { overlapNumber }
::= { overlapTable 1 }

OverlapEntry ::= SEQUENCE {
      overlapNumber     INTEGER,
      overlapType       INTEGER,
      overlapIncludedPhases   OCTET STRING,
      overlapModifierPhases   OCTET STRING,
      overlapTrailGreen INTEGER,
      overlapTrailYellow      INTEGER,
      overlapTrailRed   INTEGER,
      overlapWalk       INTEGER,
      overlapPedClearance     INTEGER,
      overlapConflictingPedPhases   OCTET STRING }
```

#### 5.10.2.1 Overlap Number

```
overlapNumber   OBJECT-TYPE
      SYNTAX   INTEGER (1..255)
      ACCESS read-only
      STATUS mandatory
      DESCRIPTION "<Definition> The overlap number for objects in this row.
            The value shall not exceed the maxOverlaps object. The value maps
            to the Overlap as follows:
            1 = Overlap A, 2 = Overlap B etc.
      <Object Identifier> 1.3.6.1.4.1.1206.4.2.1.9.2.1.1
```

 © 2023 AASHTO / ITE / NEMA

```
      <Object Type> S
      <Unit> overlap"
::= { overlapEntry 1 }
```

#### 5.10.2.2 Overlap Type

```
overlapType   OBJECT-TYPE
      SYNTAX INTEGER { other(1),
            normal (2),
            minusGreenYellow (3),
            pedestrianNormal (4),
            fYAThreeSection (5),
            fYAFourSection (6),
            fRAThreeSection (7),
            fRAFourSection (8),
            transit-2 (9),
            minusGreenYellowAlternate (10)}
      ACCESS read-write
      STATUS mandatory
      DESCRIPTION "<Definition> The type of overlap operation for this row.
            The types are as follows:
            other: The overlap operates in another mode than those described
            herein.
            normal: The overlap output shall be controlled by the
            overlapIncludedPhases when this type is indicated. The overlap
            output shall be green in the following situations:
                  (1) when an overlap included phase is green.
                  (2) when an overlap included phase is yellow (or red
            clearance) and an overlap included phase is next.

            The overlap output shall be yellow when an included phase is
            yellow and an overlap included phase is not next. The overlap
            output shall be red whenever the overlap green and yellow are not
            ON.
            minusGreenYellow: The overlap output shall be controlled by the
            overlapIncludedPhases and the overlapModifierPhases if this type
            is indicated. The overlap output shall be green in the following
            situations:
                  (1) when an overlap included phase is green and an overlap
            modifier phase is NOT green.
                  (2) when an overlap included phase is yellow (or red
            clearance) and an overlap included phase is next and an overlap
            modifier phase is NOT green.

            The overlap output shall be yellow when an overlap included phase
            is yellow and an overlap modifier phase is NOT yellow and an
            overlap included phase is not next. The overlap output shall be
            red whenever the overlap green and yellow are not ON.
            pedestrianNormal: The overlap output shall be controlled by the
            overlapIncludedPhases when this type is indicated. The overlap
            output shall be Walk in the following situations:
                  (1) when an overlap included phase is green.
                  (2) when an overlap included phase is yellow (or red
            clearance) and an overlap included phase is next.
                  (3) when an overlap included phase is Walk.
                  (4) when an overlap included phase is in a pedestrian
            clearance interval and an overlap included phase is next.
```

© 2023 AASHTO / ITE / NEMA 

Upon completion of the Walk interval, the overlap enters the pedestrian clearance interval.

The overlap output shall exit the pedestrian clearance interval to steady Dont Walk when the programmed pedestrian clearance time expires. The overlap output shall be steady Dont Walk whenever the overlap Walk and pedestrian clearance are not ON.
**fYAThreeSection:** The overlap output shall be controlled by the overlapIncludedPhases and the overlapModifierPhases if this type is indicated. It shall be used with a 3-section signal head where the overlap output drives the green arrow, combined yellow/flashing yellow arrow, and red arrow. The permissive through phase opposing the left-turn signal is the overlapIncludedPhases and the associated left-turn protected phase is the overlapModifierPhases.
The overlap output shall be FYA in the following situations:
(1) when an overlap included phase is green and an overlap modifier phase is NOT green.
(2) when an overlap included phase is yellow (or red clearance), an overlap included phase is next or an overlap modifier phase is next, and a modifier phase is NOT green.

The overlap output shall be yellow:
(1) when an overlap included phase is yellow, an overlap included phase is not next, and an overlap modifier phase is NOT green.
(2) when an overlap modifier phase is yellow.

The overlap output shall be red:
(1) when an overlap included phase is red, an overlap modifier phase is NOT green, and an overlap modifier phase is NOT yellow.
(2) when an overlap modifier phase is timing a red-clearance interval.

The overlap output shall be green:
(1) when an overlap modifier phase is green.
**fYAFourSection:** The overlap output shall be controlled by the overlapIncludedPhases and the overlapModifierPhases if this type is indicated. It shall be used with a 4-section signal head where the overlap output drives the flashing yellow arrow, yellow and red. The permissive through phase opposing the left-turn signal is the overlapIncludedPhases and the associated left-turn protected phase is the overlapModifierPhases.
The overlap output shall be FYA in the following situations:
(1) when an overlap included phase is green and an overlap modifier phase is NOT green.
(2) when an overlap included phase is yellow (or red clearance), an overlap included phase or an overlap modifier phase is next and an overlap modifier phase is NOT green.

The overlap output shall be yellow:
(1) when an overlap included phase is yellow, an overlap included phase is not next, and an overlap modifier phase is NOT green.
(2) when an overlap modifier phase is yellow.

 © 2023 AASHTO / ITE / NEMA

The overlap output shall be red:
(1) when an overlap included phase is red, an overlap modifier phase is NOT green, and an overlap modifier phase is NOT yellow.
(2) when an overlap modifier phase is timing a red-clearance interval.

The overlap output shall be blank/dark:
(1) when an overlap modifier phase is green

**fRAThreeSection:** The overlap output shall be controlled by the overlapIncludedPhases and the overlapModifierPhases if this type is indicated. The overlap output drives the green arrow, yellow arrow, and combined red/flashing red arrow. The overlapIncludedPhases is an opposing through phase and the overlapModifierPhases is a protected left turn phase.
The overlap output shall be green when an overlap modifier phase is green.
The overlap output shall be yellow:
(1) when an overlap modifier phase is yellow.
(2) when an overlap modifier phase is red and an overlap included phase is yellow.

The overlap output shall be red when the overlap modifier and included phases are red.
The overlap output shall be flashing red when an overlap included phase is green and an overlap modifier phase is red.

**fRAFourSection:** The overlap output shall be controlled by the overlapIncludedPhases and the overlapModifierPhases if this type is indicated. The overlap output drives the yellow arrow, red arrow, and flashing red arrow. The overlapIncludedPhases is an opposing through phase and the overlapModifierPhases is a protected left turn phase.
The overlap outputs shall be blank when the overlapModifierPhase is green.

The overlap output shall be yellow:
(1) when an overlap modifier phase is yellow.
(2) when an overlap modifier phase is red and an overlap included phase is yellow.

The overlap output shall be red when an overlap modifier phase and an overlap included phase are red.
The overlap output shall be flashing red when an overlap included phase is green and an overlap modifier phase is red.

**transit-2:** The overlap output shall be controlled by the overlapIncludedPhases when this type is indicated. The overlap output drives a 2-section bar signal for transit vehicles using overlap green (vertical bar) and red (horizontal bar) outputs.
The overlap output shall be green in the following situations:
(1) when an overlap included phase is green.

The overlap output shall be flashing green when an overlap included phase is yellow and an overlap included phase is not next.
The overlap output shall be red whenever an overlap included phase is red.

© 2023 AASHTO / ITE / NEMA Copy Per MIB Distribution Permission

```
            minusGreenYellowAlternate: The overlap output shall be controlled
            by the overlapIncludedPhases and the overlapModifierPhases if
            this type is indicated. The overlap output shall be green in the
            following situations:
                  (1) when an overlap included phase is green and an overlap
            modifier phase is NOT green.
                  (2) when an overlap included phase is yellow (or red
            clearance) and an overlap included phase is next and an overlap
            modifier phase is NOT green and an overlap modifier phase is not
            next.

            The overlap output shall be yellow when an overlap included phase
            is yellow and an overlap modifier phase is NOT yellow and an
            overlap included phase is not next. The overlap output shall be
            red whenever the overlap green and yellow are not ON.

            Note: Each enumeration requires the user to understand and avoid
            violation of MUTCD operational guidelines.
      <Object Identifier> 1.3.6.1.4.1.1206.4.2.1.9.2.1.2
      <Object Type> P"
::= { overlapEntry 2 }
```

#### 5.10.2.3 Overlap Included Phase Parameter

```
overlapIncludedPhases   OBJECT-TYPE
      SYNTAX OCTET STRING
      ACCESS read-write
      STATUS mandatory
      DESCRIPTION "<Definition> Each octet is a Phase (number) that shall be
            an included phase for the overlap. The phase number value shall
            not exceed the maxPhases object value.
      <Object Identifier> 1.3.6.1.4.1.1206.4.2.1.9.2.1.3
      <Object Type> P2"
::= { overlapEntry 3 }
```

#### 5.10.2.4 Overlap Modifier Phase Parameter

```
overlapModifierPhases   OBJECT-TYPE
      SYNTAX OCTET STRING
      ACCESS read-write
      STATUS mandatory
      DESCRIPTION "<Definition> Each octet is a Phase (number) that shall be
            a modifier phase for the overlap. The phase number value shall
            not exceed the maxPhases object value. The use of this object is
            defined by the overlapType.
      <Object Identifier> 1.3.6.1.4.1.1206.4.2.1.9.2.1.4
      <Object Type> P2"
::= { overlapEntry 4 }
```

#### 5.10.2.5 Overlap Trailing Green Parameter

```
overlapTrailGreen   OBJECT-TYPE
      SYNTAX INTEGER (0..255)
      ACCESS read-write
      STATUS mandatory
```

Copy Per MIB Distribution Permission © 2023 AASHTO / ITE / NEMA

```
      DESCRIPTION "<Definition> Overlap Trailing Green Parameter in seconds
            (0-255 sec). When this value is greater than zero and the overlap
            green (or walk) would normally terminate, the overlap green (or
            walk) shall be extended by this additional time. This is
            applicable to vehicle phases, bicycle phases, and transit phases.
      <Object Identifier> 1.3.6.1.4.1.1206.4.2.1.9.2.1.5
      <Object Type> P
      <Unit> second"
::= { overlapEntry 5 }
```

#### 5.10.2.6 Overlap Trailing Yellow Change Parameter

```
overlapTrailYellow   OBJECT-TYPE
      SYNTAX   INTEGER (0..255)
      ACCESS read-write
      STATUS mandatory
      DESCRIPTION "<Definition> Overlap Trailing Yellow Change Parameter in
            tenth seconds (NEMA range: 3.0-25.5 sec). When the overlap green
            has been extended (Trailing Green), this value shall determine
            the current length of the Yellow Change interval for the overlap.
            This is applicable to vehicle phases, bicycle phases, and transit
            phases.
      <Object Identifier> 1.3.6.1.4.1.1206.4.2.1.9.2.1.6
      <Object Type> P
      <Unit> tenth second"
::= { overlapEntry 6 }
```

#### 5.10.2.7 Overlap Trailing Red Clear Parameter

```
overlapTrailRed   OBJECT-TYPE
      SYNTAX INTEGER (0..255)
      ACCESS read-write
      STATUS mandatory
      DESCRIPTION "<Definition> Overlap Trailing Red Clear Parameter in tenth
            seconds (0-25.5 sec). When the overlap green has been extended
            (Trailing Green), this value shall determine the current length
            of the Red Clearance interval for the overlap. This is applicable
            to vehicle phases, bicycle phases, and transit phases.
      <Object Identifier> 1.3.6.1.4.1.1206.4.2.1.9.2.1.7
      <Object Type> P
      <Unit> tenth second"
::= { overlapEntry 7 }
```

#### 5.10.2.8 Overlap Walk Parameter

```
overlapWalk   OBJECT-TYPE
      SYNTAX INTEGER (0..255)
      ACCESS read-write
      STATUS mandatory
      DESCRIPTION "<Definition> Overlap Walk Parameter in seconds (0-255
            sec). This value is the length of the walk interval for a
            pedestrian overlap. Upon completion of the Walk interval, the
            overlap enters the pedestrian clearance interval.
      <Object Identifier> 1.3.6.1.4.1.1206.4.2.1.9.2.1.8
      <Object Type> P
      <Unit> second"
```

© 2023 AASHTO / ITE / NEMA Copy Per MIB Distribution Permission

```
::= { overlapEntry 8 }
```

#### 5.10.2.9 Overlap Pedestrian Clearance Parameter

```
overlapPedClearance   OBJECT-TYPE
      SYNTAX INTEGER (0..255)
      ACCESS read-write
      STATUS mandatory
      DESCRIPTION "<Definition> Overlap Pedestrian Clearance Parameter in
            seconds (0-255 sec). This value is the length of the pedestrian
            clearance interval.
      <Object Identifier> 1.3.6.1.4.1.1206.4.2.1.9.2.1.9
      <Object Type> P
      <Unit> second"
::= { overlapEntry 9 }
```

#### 5.10.2.10 Overlap Conflicting Pedestrian Phase Parameter

```
overlapConflictingPedPhases   OBJECT-TYPE
      SYNTAX OCTET STRING
      ACCESS read-write
      STATUS mandatory
      DESCRIPTION "<Definition> Each octet is a Phase (number) that shall be
            a pedestrian modifier phase for the overlap. The phase number
            value shall not exceed the maxPhases object value.
            If the overlap type is 'normal', a non-null value would suppress
            the overlap when the pedestrian phase is active (in the walk or
            clearance interval). Upon completion of the active pedestrian
            phase and upon completion of a clearance interval (MUTCD requires
            3 seconds), the overlap is allowed to proceed to the green state.

            If the overlap type is fYAThreeSection or fYAFourSection, a non-
            null value would maintain the overlap red state when the
            pedestrian phase is active (in the walk or clearance interval).
            Upon completion of the active pedestrian phase and upon
            completion of a clearance interval (MUTCD requires 3 seconds),
            the overlap is allowed to proceed to the flashing yellow state.
      <Object Identifier> 1.3.6.1.4.1.1206.4.2.1.9.2.1.10
      <Object Type> P2"
::= { overlapEntry 10 }
```

### 5.10.3 Maximum Overlap Status Groups

```
maxOverlapStatusGroups   OBJECT-TYPE
      SYNTAX INTEGER (1..255)
      ACCESS read-only
      STATUS mandatory
      DESCRIPTION "<Definition> The Maximum Number of Overlap Status Groups
            (8 overlaps per group) this Actuated Controller Unit supports.
            This value is equal to TRUNCATE [(maxOverlaps + 7) / 8]. This
            object indicates the maximum rows which shall appear in the
            overlapStatusGroupTable object.
      <Object Identifier> 1.3.6.1.4.1.1206.4.2.1.9.3
      <Object Type> S
      <Unit> group "
::= { overlap 3 }
```

 © 2023 AASHTO / ITE / NEMA

### 5.10.4 Overlap Status Group Table

```
overlapStatusGroupTable   OBJECT-TYPE
      SYNTAX SEQUENCE OF OverlapStatusGroupEntry
      ACCESS not-accessible
      STATUS mandatory
      DESCRIPTION "<Definition> A table containing Actuated Controller Unit
            overlap output (Red, Yellow, & Green) status in groups of eight
            overlaps. The number of rows in this table is equal to the
            maxOverlapStatusGroups object.
      <TableType> static
      <Object Identifier> 1.3.6.1.4.1.1206.4.2.1.9.4"
::= { overlap 4 }

overlapStatusGroupEntry   OBJECT-TYPE
      SYNTAX OverlapStatusGroupEntry
      ACCESS not-accessible
      STATUS mandatory
      DESCRIPTION "<Definition> Red, Yellow, & Green Output Status for eight
            Actuated Controller Unit overlaps.
      <Object Identifier> 1.3.6.1.4.1.1206.4.2.1.9.4.1"
      INDEX   { overlapStatusGroupNumber }
::= { overlapStatusGroupTable 1 }

OverlapStatusGroupEntry ::= SEQUENCE {
      overlapStatusGroupNumber      INTEGER,
      overlapStatusGroupReds        INTEGER,
      overlapStatusGroupYellows     INTEGER,
      overlapStatusGroupGreens      INTEGER }
```

#### 5.10.4.1 Overlap Status Group Number

```
overlapStatusGroupNumber   OBJECT-TYPE
      SYNTAX INTEGER (1..255)
      ACCESS read-only
      STATUS mandatory
      DESCRIPTION "<Definition> The overlap StatusGroup number for objects in
            this row. This value shall not exceed the maxOverlapStatusGroups
            object value.
      <Object Identifier> 1.3.6.1.4.1.1206.4.2.1.9.4.1.1
      <Object Type> S
      <Unit> group"
::= { overlapStatusGroupEntry 1 }
```

#### 5.10.4.2 Overlap Status Group Reds

```
overlapStatusGroupReds   OBJECT-TYPE
      SYNTAX INTEGER (0..255)
      ACCESS read-only
      STATUS mandatory
      DESCRIPTION "<Definition> Overlap Red Output Status Mask, when a bit=1,
            the Overlap Red is currently active. When a bit=0, the Overlap
            Red is NOT currently active.
            Bit 7: Overlap # = (overlapStatusGroupNumber * 8)
            Bit 6: Overlap # = (overlapStatusGroupNumber * 8) - 1
```

© 2023 AASHTO / ITE / NEMA 

```
            Bit 5: Overlap # = (overlapStatusGroupNumber * 8) - 2
            Bit 4: Overlap # = (overlapStatusGroupNumber * 8) - 3
            Bit 3: Overlap # = (overlapStatusGroupNumber * 8) - 4
            Bit 2: Overlap # = (overlapStatusGroupNumber * 8) - 5
            Bit 1: Overlap # = (overlapStatusGroupNumber * 8) - 6
            Bit 0: Overlap # = (overlapStatusGroupNumber * 8) - 7
      <Object Identifier> 1.3.6.1.4.1.1206.4.2.1.9.4.1.2
      <Object Type> S"
::= { overlapStatusGroupEntry 2 }
```

#### 5.10.4.3 Overlap Status Group Yellows

```
overlapStatusGroupYellows   OBJECT-TYPE
      SYNTAX INTEGER (0..255)
      ACCESS read-only
      STATUS mandatory
      DESCRIPTION "<Definition> Overlap Yellow Output Status Mask, when a
            bit=1, the Overlap Yellow is currently active. When a bit=0, the
            Overlap Yellow is NOT currently active.
            Bit 7: Overlap # = (overlapStatusGroupNumber * 8)
            Bit 6: Overlap # = (overlapStatusGroupNumber * 8) - 1
            Bit 5: Overlap # = (overlapStatusGroupNumber * 8) - 2
            Bit 4: Overlap # = (overlapStatusGroupNumber * 8) - 3
            Bit 3: Overlap # = (overlapStatusGroupNumber * 8) - 4
            Bit 2: Overlap # = (overlapStatusGroupNumber * 8) - 5
            Bit 1: Overlap # = (overlapStatusGroupNumber * 8) - 6
            Bit 0: Overlap # = (overlapStatusGroupNumber * 8) - 7
            For pedestrianNormal overlap type, this object is used to
            represent the pedestrian clearance interval.
      <Object Identifier> 1.3.6.1.4.1.1206.4.2.1.9.4.1.3
      <Object Type> S"
::= { overlapStatusGroupEntry 3 }
```

#### 5.10.4.4 Overlap Status Group Greens

```
overlapStatusGroupGreens   OBJECT-TYPE
      SYNTAX INTEGER (0..255)
      ACCESS read-only
      STATUS mandatory
      DESCRIPTION "<Definition> Overlap Green Output Status Mask, when a
            bit=1, the Overlap Green is currently active. When a bit=0, the
            Overlap Green is NOT currently active.
            Bit 7: Overlap # = (overlapStatusGroupNumber * 8)
            Bit 6: Overlap # = (overlapStatusGroupNumber * 8) - 1
            Bit 5: Overlap # = (overlapStatusGroupNumber * 8) - 2
            Bit 4: Overlap # = (overlapStatusGroupNumber * 8) - 3
            Bit 3: Overlap # = (overlapStatusGroupNumber * 8) - 4
            Bit 2: Overlap # = (overlapStatusGroupNumber * 8) - 5
            Bit 1: Overlap # = (overlapStatusGroupNumber * 8) - 6
            Bit 0: Overlap # = (overlapStatusGroupNumber * 8) - 7
      <Object Identifier> 1.3.6.1.4.1.1206.4.2.1.9.4.1.4
      <Object Type> S"
::= { overlapStatusGroupEntry 4 }
```

 © 2023 AASHTO / ITE / NEMA

### 5.11 TS2 Port 1 Parameters

```
ts2port1  OBJECT IDENTIFIER
::= { asc 10 }

-- This object is an identifier used to group all objects for
-- support of NEMA TS 2 (Clause 3.3.1) Port 1 activities.
```

#### 5.11.1 Maximum Port 1 Addresses

```
maxPort1Addresses   OBJECT-TYPE
      SYNTAX INTEGER (1..255)
      ACCESS read-only
      STATUS mandatory
      DESCRIPTION "<Definition> The Maximum Number of Port 1 addresses this
            Actuated Controller Unit supports. This object indicates the
            maximum rows which shall appear in the port1Table object.
      <Object Identifier> 1.3.6.1.4.1.1206.4.2.1.10.1
      <Object Type> S
      <Unit> address"
::= { ts2port1 1 }
```

#### 5.11.2 Port 1 Table

```
port1Table   OBJECT-TYPE
      SYNTAX SEQUENCE OF Port1Entry
      ACCESS not-accessible
      STATUS mandatory
      DESCRIPTION "<Definition> A table containing Actuated Controller Unit
            port 1 parameters. The number of rows in this table is equal to
            maxPort1Addresses object. Address 255 is reserved for the all
            stations (link devices) address.
      <TableType> static
      <Object Identifier> 1.3.6.1.4.1.1206.4.2.1.10.2"
::= { ts2port1 2 }

port1Entry   OBJECT-TYPE
      SYNTAX Port1Entry
      ACCESS not-accessible
      STATUS mandatory
      DESCRIPTION "<Definition> This object defines a conceptual row in the
            port 1 Table.
      <Object Identifier> 1.3.6.1.4.1.1206.4.2.1.10.2.1"
      INDEX { port1Number }
::= { port1Table 1 }

Port1Entry ::= SEQUENCE {
      port1Number       INTEGER,
      port1DevicePresent      INTEGER,
      port1Frame40Enable      INTEGER,
      port1Status       INTEGER,
      port1FaultFrame   INTEGER }
```

##### 5.11.2.1 Port 1 Number

```
port1Number   OBJECT-TYPE
      SYNTAX INTEGER (1..255)
```

© 2023 AASHTO / ITE / NEMA 

```
      ACCESS read-only
      STATUS mandatory
      DESCRIPTION "<Definition> The (Port 1 address plus one) for objects in
            this row. This value shall not exceed the maxPort1Addresses
            object value.
      <Object Identifier> 1.3.6.1.4.1.1206.4.2.1.10.2.1.1
      <Object Type> S
      <Unit> address"
::= { port1Entry 1 }
```

#### 5.11.2.2 Port 1 Device Present

```
port1DevicePresent   OBJECT-TYPE
      SYNTAX INTEGER (0..1)
      ACCESS read-write
      STATUS mandatory
      DESCRIPTION "<Definition> This object is used to program the CU as to
            the presence or absence of a device for this Port 1 address. The
            CU shall transmit Command Frames only to those devices that are
            present as determined by this programming.
            True (one) - the device is present.
            False (zero) - the device is not present.
      <Object Identifier> 1.3.6.1.4.1.1206.4.2.1.10.2.1.2
      <Object Type> P"
      REFERENCE "NEMA TS 2 Clause 3.3.1.4"
::= { port1Entry 2 }
```

#### 5.11.2.3 Port 1 Frame 40 Enable

```
port1Frame40Enable   OBJECT-TYPE
      SYNTAX INTEGER (0..1)
      ACCESS read-write
      STATUS mandatory
      DESCRIPTION "<Definition> To enable or disable Frame 40 messages to the
            device at this Port 1 address. Frame 40 is used to poll the
            secondary stations for a secondary to secondary message exchange.
            Command 40 series frames shall be transmitted only to those
            devices that are enabled, as determined by this programming. TRUE
            (one) - Enable frame 40 messages for this device. FALSE (zero) -
            Disable frame 40 messages for this device.
      <Object Identifier> 1.3.6.1.4.1.1206.4.2.1.10.2.1.3
      <Object Type> P"
      REFERENCE "NEMA TS 2 Clause 3.3.1.4.1"
::= { port1Entry 3 }
```

#### 5.11.2.4 Port 1 Status

```
port1Status OBJECT-TYPE
      SYNTAX INTEGER { other (1),
            online (2),
            responseFault (3) }
      ACCESS read-only
      STATUS mandatory
      DESCRIPTION "<Definition> This object indicates the communications
            status with the associated device:
```

 © 2023 AASHTO / ITE / NEMA

```
            other: This indicates that some other communications fault has
            been detected.
            online: This indicates that at least five of the most recent 10
            response transfers were received correctly.
            responseFault: This indicates that more than 5 of the most recent
            10 response transfers were received incorrectly.
      <Object Identifier> 1.3.6.1.4.1.1206.4.2.1.10.2.1.4
      <Object Type> S"
::= { port1Entry 4 }
```

#### 5.11.2.5 Port 1 Fault Frame

```
port1FaultFrame   OBJECT-TYPE
      SYNTAX INTEGER  (0..255)
      ACCESS read-only
      STATUS mandatory
      DESCRIPTION "<Definition> This object indicates the frame number that
            caused the most recent fault.
      <Object Identifier> 1.3.6.1.4.1.1206.4.2.1.10.2.1.5
      <Object Type> S"
::= { port1Entry 5 }
```

### 5.12 ASC Block Objects

```
ascBlock  OBJECT IDENTIFIER
::= { asc 11 }

-- This object is an identifier used to group all objects for
-- support of ASC Block Upload and Download activities.
```

#### 5.12.1 ASC Block Get Control

```
ascBlockGetControl   OBJECT-TYPE
      SYNTAX OCTET STRING (SIZE(4..12))
      ACCESS read-write
      STATUS mandatory
      DESCRIPTION "<Definition> An OER encoded string of reference parameters
            for ASC Block Uploads. The parameter values in this string are:
            ascBlockDataType    INTEGER (0..255)
            ascBlockDataID      INTEGER (0..255)
            ascBlockIndex1      INTEGER (0..255) if needed
            ascBlockQuantity1   INTEGER (0..255) if needed
            ascBlockIndex2      INTEGER (0..255) if needed
            ascBlockQuantity2   INTEGER (0..255) if needed
            ascBlockIndex3      INTEGER (0..255) if needed
            ascBlockQuantity3   INTEGER (0..255) if needed
            ascBlockIndex4      INTEGER (0..255) if needed
            ascBlockQuantity4   INTEGER (0..255) if needed
            ascBlockIndex5      INTEGER (0..255) if needed
            ascBlockQuantity5   INTEGER (0..255) if needed

            A GET of ascBlockData shall utilize values currently in this
            object to define the data to be returned.

            A SET of this object shall be evaluated for validity and Error
            Status of badValue(3) be returned for the following conditions:
```

© 2023 AASHTO / ITE / NEMA Copy Per MIB Distribution Permission

```
            1) ascBlockDataType is not supported
            2) ascBlockDataID is not supported
            3) ascBlockIndex1 is zero or not supported
            4) ascBlockQuantity1 is zero or ascBlockIndex1 +
            ascBlockQuantity1 - 1 is not supported
            5) ascBlockIndex2 is zero or not supported
            6) ascBlockQuantity2 is zero or ascBlockIndex2 +
            ascBlockQuantity2) - 1 is not supported
            7) ascBlockIndex3 is zero or not supported
            8) ascBlockQuantity3 is zero or ascBlockIndex3 +
            scBlockQuantity3) - 1 is not supported
            9) ascBlockIndex4 is zero or not supported

            10) ascBlockQuantity4 is zero or ascBlockIndex4 +
            ascBlockQuantity4) - 1 is not supported
            11) ascBlockIndex5 is zero or not supported
            12) ascBlockQuantity5 is zero or ascBlockIndex5 +
            scBlockQuantity5) - 1 is not supported
            13) if the SET length is zero or incorrect for ascBlockDataType &
            ascBlockDataID
            14) if the GetResponse length for a GET on ascBlockData using
            maximum data field sizes would exceed a local limitation

            When this validity check fails, ascBlockErrorStatus shall be set
            equal to the Bullet Value above that generated the error.
      <Object Identifier> 1.3.6.1.4.1.1206.4.2.1.11.1
      <Object Type> C
      <Unit> "
::= { ascBlock 1 }
```

### 5.12.2 ASC Block Data

```
ascBlockData   OBJECT-TYPE
      SYNTAX OCTET STRING (SIZE(6..65535))
      ACCESS  read-write
      STATUS  mandatory
      DESCRIPTION "<Definition> An OER encoded string used for uploading and
            downloading ASC parameters. See SECTION 6 for encoding and
            decoding the block. A SET on this object shall require the use of
            'dbCreateTransaction' defined in NTCIP 1201 Clause 2.3.1.

            A SET of this object shall be evaluated for validity and Error
            Status of badValue(3) be returned for the following conditions:
            1) ascBlockDataType is not supported
            2) ascBlockDataID is not supported
            3) ascBlockIndex1 is zero or not supported
            4) ascBlockQuantity1 is zero or ascBlockIndex1 +
            ascBlockQuantity1 - 1 is not supported
            5) ascBlockIndex2 is zero or not supported
            6) ascBlockQuantity2 is zero or ascBlockIndex2 +
            ascBlockQuantity2) - 1 is not supported
            7) ascBlockIndex3 is zero or not supported
            8) ascBlockQuantity3 is zero or ascBlockIndex3 +
            ascBlockQuantity3) - 1 is not supported
            9) ascBlockIndex4 is zero or not supported
            10) ascBlockQuantity4 is zero or ascBlockIndex4 +
            ascBlockQuantity4) - 1 is not supported
```

 © 2023 AASHTO / ITE / NEMA

```
            11) ascBlockIndex5 is zero or not supported
            12) ascBlockQuantity5 is zero or ascBlockIndex5 +
            ascBlockQuantity5) - 1 is not supported
            13) if the SET length is zero or incorrect for ascBlockDataType &
            ascBlockDataID
            14) if the SET (SEQUENCE OF) value is incorrect.

            When this validity check fails, ascBlockErrorStatus shall be set
            equal to the Bullet Value above that generated the error.

            A SET that includes an unsupported value for a supported data
            element shall return an Error Status of badValue(3) and
            ascBlockErrorStatus shall be set equal to: (data Sequence # *
            100) + data Element #

            A SET that includes a non-zero or non-null value in the position
            of an unsupported data element shall return an Error Status of
            badValue(3) and ascBlockErrorStatus shall be set equal to: (data
            Sequence # * 100) + data Element #

            A GET on this object shall utilize values currently in
            ascBlockGetControl to define the data to be returned. When
            ascBlockGetControl has invalid data, an Error STATUS of
            badValue(3) shall be returned.

            A GET shall return a zero or null value in the position of an
            unsupported object.
      <Object Identifier> 1.3.6.1.4.1.1206.4.2.1.11.2
      <Object Type> C
      <Unit> "
::= { ascBlock 2 }
```

### 5.12.3 ASC Block Error Status

```
ascBlockErrorStatus OBJECT-TYPE
      SYNTAX INTEGER (0..65535)
      ACCESS read-only
      STATUS mandatory
      DESCRIPTION "<Definition> This object defines the data element within
            ascBlockGetControl or ascBlockData that caused a badValue(3)
            ErrorStatus. This object should equal zero after any successful
            SET to ascBlockGetControl or ascBlockData.
      <Object Identifier> 1.3.6.1.4.1.1206.4.2.1.11.3
      <Object Type> S"
::= { ascBlock 3 }
```

## 5.13 Cabinet Parameters

```
cabinetEnvironment  OBJECT IDENTIFIER
::= { asc 12 }

-- This node contains objects that monitor and control the cabinet
-- environment functions for this device.
```

© 2023 AASHTO / ITE / NEMA Copy Per MIB Distribution Permission

### 5.13.1 Maximum Cabinet Environmental Monitoring Devices

```
maxCabinetEnvironDevices   OBJECT-TYPE
      SYNTAX   INTEGER (1..255)
      ACCESS   read-only
      STATUS   mandatory
      DESCRIPTION "<Definition> The maximum number of environmental
            monitoring devices this CU supports. This object indicates the
            maximum rows which shall appear in the cabinetEnvironDevicesTable
            object.
      <Object Identifier> 1.3.6.1.4.1.1206.4.2.1.12.1
      <Object Type> S
      <Unit> number"
::= { cabinetEnvironment 1 }
```

### 5.13.2 Cabinet Environmental Devices Table

```
cabinetEnvironDevicesTable   OBJECT-TYPE
      SYNTAX   SEQUENCE OF CabinetEnvironDeviceEntry
      ACCESS   not-accessible
      STATUS   mandatory
      DESCRIPTION "<Definition> A table containing the parameters of the
            environmental monitoring devices contained in the cabinet. The
            number of rows in this table is equal to the
            maxCabinetEnvironDevices object.
      <Object Identifier> 1.3.6.1.4.1.1206.4.2.1.12.2
      <TableType> static"
::= { cabinetEnvironment 2 }

cabinetEnvironDeviceEntry   OBJECT-TYPE
      SYNTAX   CabinetEnvironDeviceEntry
      ACCESS   not-accessible
      STATUS   mandatory
      DESCRIPTION "<Definition> Parameters for a specific CU cabinet
            environmental condition monitoring device.
      <Object Identifier> 1.3.6.1.4.1.1206.4.2.1.12.2.1"
      INDEX   { cabinetEnvironDeviceNumber, cabinetEnvironDeviceIndex }
::= { cabinetEnvironDevicesTable 1 }

CabinetEnvironDeviceEntry ::= SEQUENCE {
      cabinetEnvironDeviceNumber    INTEGER,
      cabinetEnvironDeviceType      INTEGER,
      cabinetEnvironDeviceIndex     INTEGER,
      cabinetEnvironDeviceDescription     DisplayString,
      cabinetEnvironDeviceOnStatus  INTEGER,
      cabinetEnvironDeviceErrorStatus     INTEGER }
```

#### 5.13.2.1 Cabinet Environmental Monitoring Device Number

```
cabinetEnvironDeviceNumber   OBJECT-TYPE
      SYNTAX   INTEGER (1..255)
      ACCESS   read-only
      STATUS   mandatory
      DESCRIPTION "<Definition> The environmental monitoring number for
            objects in this row. This value shall not exceed the
            maxCabinetEnvironDevices object value.
      <Object Identifier> 1.3.6.1.4.1.1206.4.2.1.12.2.1.1
```

 © 2023 AASHTO / ITE / NEMA

```
      <Object Type> S
      <Unit> monitoring device"
::= { cabinetEnvironDeviceEntry 1 }
```

#### 5.13.2.2 Cabinet Environmental Monitoring Sensor Type

```
cabinetEnvironDeviceType   OBJECT-TYPE
      SYNTAX   INTEGER { other (1),
            door (2),
            fan (3),
            heater (4),
            floatSwitch (5)}
      ACCESS   read-write
      STATUS   mandatory
      DESCRIPTION "<Definition> The type of environment monitoring device to
            monitor the cabinet is an enumerated integer.
            other: the type of environmental monitoring device is not defined
                  by this standard.
            door: this cabinet environmental monitoring device is a door to
                  the cabinet.
            fan: this cabinet environmental monitoring device is a fan within
                  the cabinet.
            heater: this cabinet environmental monitoring device is a heater
                  within the cabinet.
            floatSwitch: this cabinet environmental monitoring device is a
                  float switch for water level detection.
      <Object Identifier> 1.3.6.1.4.1.1206.4.2.1.12.2.1.2
      <Object Type> P"
::= { cabinetEnvironDeviceEntry 2 }
```

#### 5.13.2.3 Cabinet Environmental Monitoring Device Index

```
cabinetEnvironDeviceIndex  OBJECT-TYPE
      SYNTAX   INTEGER (1..255)
      ACCESS   read-only
      STATUS   mandatory
      DESCRIPTION "<Definition> The index for the cabinetEnvironDeviceType.
            This value allows support for multiple sensors of a specific
            environment monitoring device type.
      <Object Identifier> 1.3.6.1.4.1.1206.4.2.1.12.2.1.3
      <Object Type> S"
::= { cabinetEnvironDeviceEntry 3 }
```

#### 5.13.2.4 Cabinet Environmental Monitoring Device Description

```
cabinetEnvironDeviceDescription   OBJECT-TYPE
      SYNTAX   DisplayString (SIZE (0..64))
      ACCESS   read-write
      STATUS   mandatory
      DESCRIPTION "<Definition> Human-readable description of the cabinet
            environmental device. This value should provide enough
            information for maintenance personnel to identify the type (door,
            fan, heater, etc.) and physical location of the device defined in
            this row within the CU or CU cabinet.
      <Object Identifier> 1.3.6.1.4.1.1206.4.2.1.12.2.1.4
      <Object Type> S"
```

© 2023 AASHTO / ITE / NEMA Copy Per MIB Distribution Permission

```
::= { cabinetEnvironDeviceEntry 4 }
```

#### 5.13.2.5 Cabinet Environmental Monitoring Device On Status

```
cabinetEnvironDeviceOnStatus   OBJECT-TYPE
      SYNTAX   INTEGER { true (1),
            false (2) }
      ACCESS   read-only
      STATUS   mandatory
      DESCRIPTION "<Definition> Indicates if this environmental monitoring
            device is on/open or off/closed. A bit orientation of 1 (true)
            indicates the environmental monitoring device is on, or in the
            case of a door, the door is open. A value of 0 (false) indicates
            this environmental monitoring device is off, or in the case of a
            door, the door is closed.
      <Object Identifier> 1.3.6.1.4.1.1206.4.2.1.12.2.1.5
      <Object Type> S"
::= { cabinetEnvironDeviceEntry 5 }
```

#### 5.13.2.6 Cabinet Environmental Monitoring Device Error Status

```
cabinetEnvironDeviceErrorStatus  OBJECT-TYPE
      SYNTAX   INTEGER { other (1), --not used
            noError (2),
            fail (3),
            notMonitored (4) }
      ACCESS   read-only
      STATUS   mandatory
      DESCRIPTION "<Definition> Indicates the current status of the
            environmental monitoring device.
      <Object Identifier> 1.3.6.1.4.1.1206.4.2.1.12.2.1.6
      <Object Type> S"
::= { cabinetEnvironDeviceEntry 6 }
```

### 5.13.3 Maximum Number of Cabinet Temperature Sensors

```
maxCabinetTempSensors   OBJECT-TYPE
      SYNTAX INTEGER (0..16)
      ACCESS read-only
      STATUS mandatory
      DESCRIPTION "<Definition> Indicates the number of rows in the
            cabinetTempSensorStatusTable.
      <Object Identifier> 1.3.6.1.4.1.1206.4.2.1.12.3
      <Object Type> S
      <Unit> temperature sensors"
::= { cabinetEnvironment 3 }
```

### 5.13.4 Cabinet Temperature Sensor Status Table

```
cabinetTempSensorStatusTable OBJECT-TYPE
      SYNTAX SEQUENCE OF CabinetTempSensorStatusEntry
      ACCESS not-accessible
      STATUS mandatory
      DESCRIPTION "<Definition> A table containing status information for
            each temperature sensor within a CU and CU cabinet.
      <Table Type> static
```

 © 2023 AASHTO / ITE / NEMA

```
      <Object Identifier> 1.3.6.1.4.1.1206.4.2.1.12.4"
::= { cabinetEnvironment 4 }

cabinetTempSensorStatusEntry OBJECT-TYPE
      SYNTAX CabinetTempSensorStatusEntry
      ACCESS not-accessible
      STATUS mandatory
      DESCRIPTION "<Definition> An entry in the cabinet temperature sensor
            status table.
      <Object Identifier> 1.3.6.1.4.1.1206.4.2.1.12.4.1"
      INDEX { cabinetTempSensorIndex }
::= { cabinetTempSensorStatusTable 1}

CabinetTempSensorStatusEntry ::= SEQUENCE {
      cabinetTempSensorIndex INTEGER,
      cabinetTempSensorDescription DisplayString,
      cabinetTempSensorCurrentReading INTEGER,
      cabinetTempSensorHighThreshold INTEGER,
      cabinetTempSensorLowThreshold INTEGER,
      cabinetTempSensorStatus INTEGER }
```

#### 5.13.4.1 Cabinet Temperature Sensor Index

```
cabinetTempSensorIndex OBJECT-TYPE
      SYNTAX INTEGER (1..16)
      ACCESS read-only
      STATUS mandatory
      DESCRIPTION "<Definition> Index of the cabinet temperature sensor
            status table. This value shall not exceed maxCabinetTempSensors.
      <Object Identifier> 1.3.6.1.4.1.1206.4.2.1.12.4.1.1
      <Object Type> S"
::= { cabinetTempSensorStatusEntry 1 }
```

#### 5.13.4.2 Cabinet Temperature Sensor Description

```
cabinetTempSensorDescription OBJECT-TYPE
      SYNTAX DisplayString (SIZE (0..64))
      ACCESS read-write
      STATUS mandatory
      DESCRIPTION "<Definition> Human-readable description of the temperature
            sensor. This value should provide enough information for
            maintenance personnel to identify the physical location of the
            temperature sensor within the CU or CU cabinet.
      <Object Identifier> 1.3.6.1.4.1.1206.4.2.1.12.4.1.2
      <Object Type> S"
::= { cabinetTempSensorStatusEntry 2 }
```

#### 5.13.4.3 Cabinet Temperature Sensor Current Reading

```
cabinetTempSensorCurrentReading OBJECT-TYPE
      SYNTAX   INTEGER  (-128..127)
      ACCESS   read-only
      STATUS   mandatory
      DESCRIPTION "<Definition> Indicates the current reading, in degrees
            Celsius, of the temperature sensor.
```

© 2023 AASHTO / ITE / NEMA 

```
      <Valid Value Rule> The value -127 shall indicate a temperature of -127
            degrees Celsius or lower. The value 127 shall indicate a
            temperature of 127 degrees Celsius or higher. The value -128
            shall indicate an error condition or missing value.
      <Object Identifier> 1.3.6.1.4.1.1206.4.2.1.12.4.1.3
      <Object Type> S
      <Unit> degrees Celsius"
      DEFVAL { -56 }
::= { cabinetTempSensorStatusEntry 3 }
```

#### 5.13.4.4 Cabinet Temperature Sensor High Warning Temperature

```
cabinetTempSensorHighThreshold OBJECT-TYPE
      SYNTAX INTEGER  (-128..127)
      ACCESS read-write
      STATUS mandatory
      DESCRIPTION "<Definition> Indicates the high value of the temperature,
            in degrees Celsius, associated with this temperature sensor above
            which would generate a warning (Bit 3 of unitAlarmStatus4). This
            value should not be lower than the value of the
            cabinetTempSensorLowThreshold object.
      <Object Identifier> 1.3.6.1.4.1.1206.4.2.1.12.4.1.4
      <Object Type> P
      <Unit>degrees Celsius"
::= { cabinetTempSensorStatusEntry 4 }
```

#### 5.13.4.5 Cabinet Temperature Sensor Low Warning Temperature

```
cabinetTempSensorLowThreshold OBJECT-TYPE
      SYNTAX INTEGER (-128..127)
      ACCESS read-write
      STATUS mandatory
      DESCRIPTION "<Definition> Indicates the low value of the temperature,
            in degrees Celsius, associated with this temperature sensor below
            which would generate a warning (Bit 3 of unitAlarmStatus4). This
            value should not be higher than the value of the
            cabinetTempSensorHighThreshold object.
      <Object Identifier> 1.3.6.1.4.1.1206.4.2.1.12.4.1.5
      <Object Type> P
      <Unit>degrees Celsius"
::= { cabinetTempSensorStatusEntry 5 }
```

#### 5.13.4.6 Cabinet Temperature Sensor Status

```
cabinetTempSensorStatus OBJECT-TYPE
      SYNTAX INTEGER { other (1),
            noError (2),
            fail (3) }
      ACCESS read-only
      STATUS mandatory
      DESCRIPTION "<Definition> Indicates the current status of the indicated
            temperature sensor.
      <Object Identifier> 1.3.6.1.4.1.1206.4.2.1.12.4.1.6
      <Object Type> P"
::= { cabinetTempSensorStatusEntry 6 }
```

 © 2023 AASHTO / ITE / NEMA

### 5.13.5 Maximum Number of Humidity Sensors

```
maxCabinetHumiditySensors OBJECT-TYPE
      SYNTAX INTEGER (0..16)
      ACCESS read-only
      STATUS mandatory
      DESCRIPTION "<Definition> Indicates the number of rows in the
            cabinetHumiditySensorStatusTable.
      <Object Identifier> 1.3.6.1.4.1.1206.4.2.1.12.5
      <Object Type> P
      <Unit> humidity sensors"
::= { cabinetEnvironment 5 }
```

### 5.13.6 Cabinet Humidity Sensor Status Table

```
cabinetHumiditySensorStatusTable OBJECT-TYPE
      SYNTAX SEQUENCE OF CabinetHumiditySensorStatusEntry
      ACCESS not-accessible
      STATUS mandatory
      DESCRIPTION "<Definition> A table containing status information for
            each humidity sensor within a CU cabinet.
      <Table Type> static
      <Object Identifier> 1.3.6.1.4.1.1206.4.2.1.12.6"
::= { cabinetEnvironment 6 }

cabinetHumiditySensorStatusEntry OBJECT-TYPE
      SYNTAX CabinetHumiditySensorStatusEntry
      ACCESS not-accessible
      STATUS mandatory
      DESCRIPTION "<Definition> An entry in the humidity sensor status table.
      <Object Identifier> 1.3.6.1.4.1.1206.4.2.1.12.6.1"
      INDEX { cabinetHumiditySensorIndex }
      ::= { cabinetHumiditySensorStatusTable 1}

CabinetHumiditySensorStatusEntry ::= SEQUENCE {
      cabinetHumiditySensorIndex INTEGER,
      cabinetHumiditySensorDescription DisplayString,
      cabinetHumiditySensorCurrentReading INTEGER,
      cabinetHumidityThreshold INTEGER,
      cabinetHumiditySensorStatus INTEGER }
```

#### 5.13.6.1 Cabinet Humidity Sensor Index

```
cabinetHumiditySensorIndex OBJECT-TYPE
      SYNTAX INTEGER (1..16)
      ACCESS read-only
      STATUS mandatory
      DESCRIPTION "<Definition> Index of the humidity sensor status table.
            This value does not exceed maxCabinetHumiditySensors.
      <Object Identifier> 1.3.6.1.4.1.1206.4.2.1.12.6.1.1
      <Object Type> S"
::= { cabinetHumiditySensorStatusEntry 1 }
```

#### 5.13.6.2 Cabinet Humidity Sensor Description

```
cabinetHumiditySensorDescription OBJECT-TYPE
      SYNTAX DisplayString (SIZE (0..64))
```

© 2023 AASHTO / ITE / NEMA Copy Per MIB Distribution Permission

```
      ACCESS read-write
      STATUS mandatory
      DESCRIPTION "<Definition> Human-readable description of the humidity
            sensor. This value should provide enough information for
            maintenance personnel to identify the physical location of the
            humidity sensor within the CU cabinet.
      <Object Identifier> 1.3.6.1.4.1.1206.4.2.1.12.6.1.2
      <Object Type> P"
::= { cabinetHumiditySensorStatusEntry 2 }
```

#### 5.13.6.3 Cabinet Humidity Sensor Current Reading

```
cabinetHumiditySensorCurrentReading OBJECT-TYPE
      SYNTAX INTEGER (0..101)
      ACCESS read-only
      STATUS mandatory
      DESCRIPTION "<Definition> Indicates the current reading of the humidity
            sensor, in percent relative humidity.
      <Valid Value Rule> The value 101 shall indicate an error condition or
            missing value.
      <Object Identifier> 1.3.6.1.4.1.1206.4.2.1.12.6.1.3
      <Object Type> S
      <Unit> percent relative humidity"
      DEFVAL { 101 }
::= { cabinetHumiditySensorStatusEntry 3 }
```

#### 5.13.6.4 Cabinet Humidity Sensor Threshold

```
cabinetHumidityThreshold   OBJECT-TYPE
      SYNTAX   INTEGER  (0..101)
      ACCESS   read-write
      STATUS   mandatory
      DESCRIPTION "<Definition> Indicates the relative humidity, in percent,
            within the CU cabinet above which the humidity threshold alarm
            shall be activated (Bit 3 of unitAlarmStatus4).
      <Object Identifier> 1.3.6.1.4.1.1206.4.2.1.12.6.1.4
      <Object Type> P
      <Unit> percent humidity"
::= { cabinetHumiditySensorStatusEntry 4 }
```

#### 5.13.6.5 Cabinet Humidity Sensor Status

```
cabinetHumiditySensorStatus OBJECT-TYPE
      SYNTAX INTEGER { other (1), --not used
            noError (2),
            fail (3) }
      ACCESS read-only
      STATUS mandatory
      DESCRIPTION "<Definition> Indicates the current status of the indicated
            humidity sensor.
      <Object Identifier> 1.3.6.1.4.1.1206.4.2.1.12.6.1.5
      <Object Type> S"
::= { cabinetHumiditySensorStatusEntry 5 }
```

Copy Per MIB Distribution Permission © 2023 AASHTO / ITE / NEMA

### 5.13.7 Power Source

```
ascPowerSource OBJECT-TYPE
      SYNTAX INTEGER { unknown (1),
            other (2),
            acLine (3),
            generator (4),
            solar (5),
            battery-UPS (6),
            dc48VPower (7),
            dc24Vpower (8) }
      ACCESS      read-only
      STATUS      mandatory
      DESCRIPTION "<Definition> Integer value that indicates the current
            primary power source for the CU cabinet, expressed as an
            enumerated integer.
            unknown:    the current primary power source is unknown or cannot
                  be determined.
            other:      the current primary power source is not defined by
                  this standard.
            acLine:     the current primary power source is in-line AC power.
            generator:  the current primary power source is a generator that
                  is operational.
            solar: the current primary power source is solar equipment, that
                  may be have a battery as an intermediary.
            battery-UPS:      the current primary power source is a battery
                  or UPS with no significant charging occurring.
            dc48VPower: the current primary power source is 48 volts DC
                  directly into the cabinet.
            dc24VPower: the current primary power source is 48 volts DC
                  directly into the cabinet.
      <Object Identifier> 1.3.6.1.4.1.1206.4.2.1.12.7
      <Object Type> S"
      DEFVAL      { unknown }
::= { cabinetEnvironment 7 }
```

### 5.13.8 Line Volts

```
ascLineVolts OBJECT-TYPE
      SYNTAX      INTEGER (0..6001)
      ACCESS      read-only
      STATUS      mandatory
      DESCRIPTION "<Definition> Indicates the voltage, in 0.1 RMS volt units,
            measured on the incoming power line for the CU. This object shall
            only be used to indicate A/C power conditions. If the line power
            is DC, this object shall not apply (i.e., this object will either
            not be supported or this object will have a value of 3001).
      <Valid Value Rule> Values 0 through 5999 shall indicate valid values.
            The value 6000 shall mean a voltage of 600.0 Vrms or greater. The
            value of 6001 shall indicate an error condition or missing value.
      <Object Identifier> 1.3.6.1.4.1.1206.4.2.1.12.8
      <Object Type> S
      <Unit>0.1 Volts Root Mean Squared (Vrms)"
      DEFVAL      { 6001 }
::= { cabinetEnvironment 8 }
```

© 2023 AASHTO / ITE / NEMA 

#### 5.13.9 ATC Cabinet LED Displays

```
atccLEDMode OBJECT-TYPE
      SYNTAX INTEGER { other (1),
            on (2),
            off (3) }
      ACCESS      read-write
      STATUS      mandatory
      DESCRIPTION "<Definition> Object that allows control of the LED
            displays within an ATC cabinet.
            other: LED mode of operation is not defined by this standard.
            on: ATCC module LEDs operate normally (e.g., full brightness and
                  flashing are prescribed by module documentation).
            off: ATCC module LEDs are off (sleep) when all cabinet door(s)
                  are closed.
            All other values are RESERVED.
      <Object Identifier> 1.3.6.1.4.1.1206.4.2.1.12.9
      <Object Type> P"
::= { cabinetEnvironment 9 }
```

### 5.14 I/O Mapping

```
ascIOmapping OBJECT IDENTIFIER
::= { asc 13 }

-- This node contains objects that configure, monitor or control input and
-- output mapping in the ASC
```

#### 5.14.1 I/O Mapping Control

```
ascIOmapControl OBJECT IDENTIFIER
::= { ascIOmapping 1 }

-- This node contains objects that control the current I/O map
```

##### 5.14.1.1 Maximum Number of I/O Maps

```
ascIOmaxMaps OBJECT-TYPE
      SYNTAX INTEGER (1..255)
      ACCESS read-only
      STATUS mandatory
      DESCRIPTION "<Definition> This object contains the maximum number of
            I/O maps this ASC supports. This object indicates the number of
            rows in the ascIOmapsTable.
      <Object Identifier> 1.3.6.1.4.1.1206.4.2.1.13.1.1
      <Object Type> S"
::= { ascIOmapControl 1 }
```

##### 5.14.1.2 Active I/O Map

```
ascIOactiveMap OBJECT-TYPE
      SYNTAX  INTEGER (1..255)
      ACCESS read-write
      STATUS mandatory
      DESCRIPTION "<Definition> This object selects the active I/O map.
            This object has to be changed as part of a 1201 Database
            Transaction (see the dbCreateTransaction object). A Database
```

 © 2023 AASHTO / ITE / NEMA

```
            Transaction that changes this object or edits the currently
            active I/O map has to satisfy the activation requirements in
            ascIOactivateRequirement at the time dbCreateTransaction is set
            to verify (3) for the transaction to successfully verify.

            The value of this object cannot exceed the value of ascIOmaxMaps.
      <Object Identifier> 1.3.6.1.4.1.1206.4.2.1.13.1.2
      <Object Type> S"
      DEFVAL { 1 }
::= { ascIOmapControl 2 }
```

#### 5.14.1.3 Conditions for Activating New I/O Map

```
ascIOactivateRequirement OBJECT-TYPE
      SYNTAX  INTEGER (0..255)
      ACCESS read-only
      STATUS mandatory
      DESCRIPTION "<Definition> This object returns the conditions under
            which an ASC will confirm a DB transaction that activates a new
            I/O map or edits the currently active I/O map. The requirements
            are selected in a bitmap format:
              Bit 0 - cabinetDoorOpen -- I/O input cabinetDoorOpen active
              Bit 1 - inFlash         -- in any flash state
              Bit 2 - allRedFlash     -- in programmed all red flash
              Bit 3 - cabinetFlash    -- in CVM flash, input localFlashSense
            active
              Bit 4 - restart         -- changes take effect only after a
            restart
              Bit 5 - reserved
              Bit 6 - reserved
              Bit 7 - reserved
            Note: if all I/O mapping values being set are the same as the
            current values, the DB transaction shall succeed without
            requiring any conditions set by this object.
      <Object Identifier> 1.3.6.1.4.1.1206.4.2.1.13.1.3
      <Object Type> S"
::= { ascIOmapControl 3 }
```

### 5.14.2 I/O Maps Maximum Inputs

```
ascIOmapMaxInputs OBJECT-TYPE
      SYNTAX INTEGER (1..65535)
      ACCESS read-only
      STATUS mandatory
      DESCRIPTION "<Definition> This object contains the maximum number of
            I/O mapping input functions this ASC supports. This object
            indicates the number of rows in the ascIOinputMapTable.
      <Object Identifier> 1.3.6.1.4.1.1206.4.2.1.13.2
      <Object Type> S"
::= { ascIOmapping 2 }
```

### 5.14.3 I/O Maps Maximum Outputs

```
ascIOmapMaxOutputs OBJECT-TYPE
      SYNTAX INTEGER (1..65535)
      ACCESS read-only
```

© 2023 AASHTO / ITE / NEMA Copy Per MIB Distribution Permission

```
      STATUS mandatory
      DESCRIPTION "<Definition> This object contains the maximum number of
            I/O mapping output functions this ASC supports. This object
            indicates the number of rows in the ascIOoutputMapTable.
      <Object Identifier> 1.3.6.1.4.1.1206.4.2.1.13.3
      <Object Type> S"
::= { ascIOmapping 3 }
```

### 5.14.4 I/O Input Map Table

```
ascIOinputMapTable   OBJECT-TYPE
      SYNTAX   SEQUENCE OF AscIOinputMapTableEntry
      ACCESS   not-accessible
      STATUS   mandatory
      DESCRIPTION "<Definition> A table containing mapping for an ASC
            Controller's inputs to functions. The number of I/O input map
            tables is equal to the value of ascIOmaxMaps.
            The total number of rows in the table is ascIOmapMaxInputs. Only
            one I/O input map may be active at any one time, and is selected
            by ascIOactiveMap.
      <TableType> static
      <Object Identifier> 1.3.6.1.4.1.1206.4.2.1.13.4"
::= { ascIOmapping 4 }

ascIOinputMapTableEntry OBJECT-TYPE
      SYNTAX   AscIOinputMapTableEntry
      ACCESS   not-accessible
      STATUS   mandatory
      DESCRIPTION "<Definition> This object defines a conceptual row in the
            ascIOinputMapTable.
      <Object Identifier> 1.3.6.1.4.1.1206.4.2.1.13.4.1"
      INDEX { ascIOmapNumber,  ascIOinputMapIOindex }
::= { ascIOinputMapTable 1 }

AscIOinputMapTableEntry ::= SEQUENCE {
   ascIOmapNumber           INTEGER,   -- up to ascIOmaxMaps
   ascIOinputMapIOindex     INTEGER,   -- up to ascIOmapMaxInputs

   ascIOinputMapDeviceType  INTEGER,   -- enum custom, FIO,TS1,BIU,SIU,AUX,
reserved
   ascIOinputMapDevicePNN   INTEGER,   -- NEMA PNN if DeviceType is custom
   ascIOinputMapDevicePtype INTEGER,   -- Custom device type
   ascIOinputMapDeviceAddr  INTEGER,   -- only used if needed (BIU, SIU)
   ascIOinputMapDevicePin   INTEGER,   -- device I/O pin index
   ascIOinputMapFuncType    INTEGER,   -- 0=STD, else nemaPrivate vendor code
   ascIOinputMapFuncPtype   INTEGER,   -- Custom function type set
   ascIOinputMapFunction    INTEGER,   -- function
   ascIOinputMapFuncIndex   INTEGER }  -- index if function support more than
one input or output
```

#### 5.14.4.1 I/O Map Number

```
ascIOmapNumber  OBJECT-TYPE
      SYNTAX   INTEGER (1..255)
      ACCESS   read-only
      STATUS   mandatory
```

 © 2023 AASHTO / ITE / NEMA

```
      DESCRIPTION "<Definition> The value of this object shall not exceed the
            ascIOmaxMaps value.
      <Object Identifier> 1.3.6.1.4.1.1206.4.2.1.13.4.1.1
      <Object Type> S"
::= { ascIOinputMapTableEntry 1 }
```

#### 5.14.4.2 I/O Input Map Index

```
ascIOinputMapIOindex OBJECT-TYPE
      SYNTAX   INTEGER (1..65535)
      ACCESS   read-only
      STATUS   mandatory
      DESCRIPTION "<Definition> The I/O index for this row of the table. The
            range will not exceed ascIOmapMaxInputs.
      <Object Identifier> 1.3.6.1.4.1.1206.4.2.1.13.4.1.2
      <Object Type> S "
::= { ascIOinputMapTableEntry 2 }
```

#### 5.14.4.3 I/O Input Map Device Type

```
ascIOinputMapDeviceType OBJECT-TYPE
      SYNTAX  INTEGER { unused (1),
                        custom (2),
                        fio (3),
                        ts1 (4),
                        biu (5),
                        siu (6),
                        aux (7) }
      ACCESS  read-write
      STATUS  mandatory
      DESCRIPTION "<Definition> This object is an selects the device type for
            this row of the table.
            A value of unused (1) means that this row of the table is unused
            (all values of ascIOinputMapIOindex up to ascIOmapMaxInputs may
            not be needed by every mapping).

            A custom type is a manufacturer defined device which also
            requires a ascIOinputMapDevicePNN and a ascIOinputMapDevicePtype
            to fully specify the device.

            Values > 7 are reserved for future device types.
      <Object Identifier> 1.3.6.1.4.1.1206.4.2.1.13.4.1.3
      <Object Type> P"
::= { ascIOinputMapTableEntry 3 }
```

#### 5.14.4.4 I/O Input Map Custom Device Manufacturer ID

```
ascIOinputMapDevicePNN OBJECT-TYPE
       SYNTAX   INTEGER (0..65535)
       ACCESS   read-write
       STATUS   mandatory
       DESCRIPTION "<Definition> The object is used to further define a
            device type when ascIOinputMapDeviceType is custom (2). The value
            of this object will be the manufacturer's Private Node Number
            (PNN) as assigned by NEMA (1.3.6.1.4.1.1206.3.PNN). This is the
            same identifier used for ASC custom blocks.
```

© 2023 AASHTO / ITE / NEMA 

```
      <Object Identifier> 1.3.6.1.4.1.1206.4.2.1.13.4.1.4
      <Object Type> P"
::= { ascIOinputMapTableEntry 4 }
```

#### 5.14.4.5 I/O Input Map Custom Device Type

```
ascIOinputMapDevicePtype OBJECT-TYPE
      SYNTAX   INTEGER (0..255)
      ACCESS   read-write
      STATUS   mandatory
      DESCRIPTION "<Definition> The object is used to further define a device
            type when ascIOinputMapDeviceType is custom (2). The value of
            this object will identify a custom device type unique to the
            manufacturer specified by ascIOinputMapDevicePNN.
      <Object Identifier> 1.3.6.1.4.1.1206.4.2.1.13.4.1.5
      <Object Type> P"
::= { ascIOinputMapTableEntry 5 }
```

#### 5.14.4.6 I/O Input Map Device Address

```
ascIOinputMapDeviceAddr OBJECT-TYPE
      SYNTAX   INTEGER (0..255)
      ACCESS   read-write
      STATUS   mandatory
      DESCRIPTION "<Definition> An address for the device at this table row.
            The address is used for devices like BIUs and SIUs that require
            an address. The value should be zero if the address is not needed
            for this row.
            If the ascIOinputMapDeviceType is biu (4), the address values
            are:
                     1   - Traffic Facilities BIU #1
                     2   - Traffic Facilities BIU #2
                     3   - Traffic Facilities BIU #3
                     4   - Traffic Facilities BIU #4
                     5-8 - reserved
                     9   - Detector BIU #1
                     10  - Detector BIU #2
                     11  - Detector BIU #3
                     12  - Detector BIU #4
                     13-16 - reserved
            Note that these values are the BIU SDLC address + 1.

            If the ascIOinputMapDeviceType is siu (5), the address values
            are:
                     1  - reserved
                     2  - 14-pack output SIU position 1
                     3  - reserved
                     4  - 14-pack output SIU position 3
                     5  -  6-pack output SIU position 4
                     6  -  6-pack output SIU position 1
                     7  -  6-pack output SIU position 2
                     8  -  6-pack output SIU position 3
                     9  - reserved
                     10 - input SIU #1
                     11 - input SIU #2
                     12 - input SIU #3
                     13 - input SIU #4
```

 © 2023 AASHTO / ITE / NEMA

```
                        14 - input SIU #5
                        15 - reserved
                  Note that these values are the SIU SDLC address + 1.
      <Object Identifier> 1.3.6.1.4.1.1206.4.2.1.13.4.1.6
      <Object Type> P"
::= { ascIOinputMapTableEntry 6 }
```

#### 5.14.4.7 I/O Input Map Device Pin

```
ascIOinputMapDevicePin OBJECT-TYPE
      SYNTAX   INTEGER (0..255)
      ACCESS   read-write
      STATUS   mandatory
      DESCRIPTION "<Definition> An index for the I/O pin at this table row.
            The range for this value will depend upon the value of other
            objects in the row.
            The range for ascIOinputMapDeviceType:
                  fio (3) pin range is AscIOmapFIOinputs
                  ts1 (4) pin range is AscIOmapTS1inputs
                  biu (5) pin range is AscIOmapBIUinputs
                  siu (6) pin range is AscIOmapSIUinputs
                  aux (7) pin range is AscIOmapAUXinputs
            The range for a custom device type will be determined by the
            manufacturer defining it.
      <Object Identifier> 1.3.6.1.4.1.1206.4.2.1.13.4.1.7
      <Object Type> P"
::= { ascIOinputMapTableEntry 7 }
```

#### 5.14.4.8 I/O Input Map Function Type

```
ascIOinputMapFuncType OBJECT-TYPE
      SYNTAX  INTEGER (0..65535)
      ACCESS  read-write
      STATUS  mandatory
      DESCRIPTION "<Definition> This object selects the function type for
            this row of the table. A value of 0 references the standard input
            functions defined by AscIOinputType and the
            ascIOinputMapFunction.
            Any other value is a manufacturer's Private Node Number (PNN) as
            assigned by NEMA (1.3.6.1.4.1.1206.3.PNN). In this case the
            function is defined by the PNN (the manufacturer),
            ascIOinputMapFuncPtype (which of the manufacturer's multiple
            function sets), and the ascIOinputMapFunction.
      <Object Identifier> 1.3.6.1.4.1.1206.4.2.1.13.4.1.8
      <Object Type> P"
::= { ascIOinputMapTableEntry 8 }
```

#### 5.14.4.9 I/O Input Map Custom Function Type

```
ascIOinputMapFuncPtype OBJECT-TYPE
      SYNTAX   INTEGER (0..255)
      ACCESS   read-write
      STATUS   mandatory
      DESCRIPTION "<Definition> The object is used to further define a
            function type when ascIOinputMapFuncType is not zero. The value
```

© 2023 AASHTO / ITE / NEMA Copy Per MIB Distribution Permission

```
            of this object will identify a custom function type unique to the
            manufacturer specified by ascIOinputMapDevicePNN.

            This allows a manufacturer to have multiple sets of functions for
            their one Private Node Number.
      <Object Identifier> 1.3.6.1.4.1.1206.4.2.1.13.4.1.9
      <Object Type> P"
::= { ascIOinputMapTableEntry 9 }
```

#### 5.14.4.10 I/O Input Map Function

```
ascIOinputMapFunction OBJECT-TYPE
      SYNTAX   INTEGER (0..255)
      ACCESS   read-write
      STATUS   mandatory
      DESCRIPTION "<Definition> This object specifies the function that is
            mapped to the I/O pin specified by this row.
            For example, if ascIOinputMapFuncType is zero (standard) then the
            function could be any AscIOinputType value such as
            vehicleDetector (51).
      <Object Identifier> 1.3.6.1.4.1.1206.4.2.1.13.4.1.10
      <Object Type> P"
::= { ascIOinputMapTableEntry 10 }
```

#### 5.14.4.11 I/O Input Map Function Index

```
ascIOinputMapFuncIndex OBJECT-TYPE
      SYNTAX   INTEGER (0..255)
      ACCESS   read-write
      STATUS   mandatory
      DESCRIPTION "<Definition> An index for the function at this table row.
            For example, if ascIOinputMapFuncType is zero (standard) and the
            ascIOinputMapFunction is vehicleDetector (51) then this index
            will determine which detector input it is (1 to
            maxVehicleDetectors).
      <Object Identifier> 1.3.6.1.4.1.1206.4.2.1.13.4.1.11
      <Object Type> P"
::= { ascIOinputMapTableEntry 11 }
```

### 5.14.5 I/O Input Map Status Table

```
ascIOinputMapStatusTable   OBJECT-TYPE
      SYNTAX   SEQUENCE OF AscIOinputMapStatusTableEntry
      ACCESS   not-accessible
      STATUS   mandatory
      DESCRIPTION "<Definition> A table containing status for the current
            mapping for an ASC controller's inputs.
      <TableType> static
      <Object Identifier> 1.3.6.1.4.1.1206.4.2.1.13.5"
::= { ascIOmapping 5 }

ascIOinputMapStatusTableEntry   OBJECT-TYPE
      SYNTAX   AscIOinputMapStatusTableEntry
      ACCESS   not-accessible
      STATUS   mandatory
```

 © 2023 AASHTO / ITE / NEMA

```
      DESCRIPTION "<Definition> This object defines a conceptual row in
            the ascIOinputMapStatusTable.
      <Object Identifier> 1.3.6.1.4.1.1206.4.2.1.13.5.1"
      INDEX { ascIOmapNumber, ascIOinputMapIOindex }
::= { ascIOinputMapStatusTable   1 }

AscIOinputMapStatusTableEntry ::= SEQUENCE {
   ascIOinputMapDevPinDescr   OCTET STRING, -- description of input pin
   ascIOinputMapDevPinStatus  INTEGER }     -- 0 or 1 for active
```

#### 5.14.5.1 I/O Input Map Device Pin Description

```
ascIOinputMapDevPinDescr OBJECT-TYPE
      SYNTAX  OCTET STRING (SIZE (32))
      ACCESS  read-only
      STATUS  mandatory
      DESCRIPTION "<Definition> This object returns the name of the input
            pin, such as 'C1-39 Detector 2'.
            Since the physical pins are determined by the controller
            hardware, the value is read-only.
      <Object Identifier> 1.3.6.1.4.1.1206.4.2.1.13.5.1.1
      <Object Type> S"
::= { ascIOinputMapStatusTableEntry 1 }
```

#### 5.14.5.2 I/O Input Map Device Pin Status

```
ascIOinputMapDevPinStatus OBJECT-TYPE
      SYNTAX  INTEGER (0..1)
      ACCESS  read-only
      STATUS  mandatory
      DESCRIPTION "<Definition> This object returns the current status of an
            input pin: inactive/OFF (0) or active/ON (1).
      <Object Identifier> 1.3.6.1.4.1.1206.4.2.1.13.5.1.2
      <Object Type> S"
::= { ascIOinputMapStatusTableEntry 2 }
```

### 5.14.6 I/O Output Map Table

```
ascIOoutputMapTable   OBJECT-TYPE
      SYNTAX   SEQUENCE OF AscIOoutputMapTableEntry
      ACCESS   not-accessible
      STATUS   mandatory
      DESCRIPTION "<Definition> A table containing mapping for an ASC
            Controller's inputs and outputs to functions.
            The number of I/O map tables is equal to the value of
            ascIOmaxMaps.
            The total number of rows in the table is ascIOmapMaxOutputs.
            Only one I/O map may be active at any one time, and is selected
            by ascIOactiveMap.
      <TableType> static
      <Object Identifier> 1.3.6.1.4.1.1206.4.2.1.13.6"
::= { ascIOmapping 6 }

ascIOoutputMapTableEntry   OBJECT-TYPE
      SYNTAX   AscIOoutputMapTableEntry
      ACCESS   not-accessible
```

© 2023 AASHTO / ITE / NEMA 

```
      STATUS   mandatory
      DESCRIPTION "<Definition> This object defines a conceptual row in
            the ascIOoutputMapTable.
      <Object Identifier> 1.3.6.1.4.1.1206.4.2.1.13.6.1"
      INDEX { ascIOmapNumber, ascIOoutputMapIOindex }
::= { ascIOoutputMapTable 1 }

AscIOoutputMapTableEntry ::= SEQUENCE {
   ascIOoutputMapIOindex       INTEGER,   -- up to ascIOmapMaxOutputs
   ascIOoutputMapDeviceType    INTEGER,   -- enum custom,
FIO,TS1,BIU,SIU,AUX, reserved
   ascIOoutputMapDevicePNN     INTEGER,   -- NEMA PNN if DeviceType is custom
   ascIOoutputMapDevicePtype   INTEGER,   -- Custom device type
   ascIOoutputMapDeviceAddr    INTEGER,   -- only used if needed (BIU, SIU)
   ascIOoutputMapDevicePin     INTEGER,   -- device I/O pin index
   ascIOoutputMapFuncType      INTEGER,   -- 0=STD, else nemaPrivate vendor
code
   ascIOoutputMapFuncPtype     INTEGER,   -- Custom function type
   ascIOoutputMapFunction      INTEGER,   -- function
   ascIOoutputMapFuncIndex     INTEGER }  -- index if function support more
than one input or output
```

#### 5.14.6.1 I/O Output Map Index

```
ascIOoutputMapIOindex  OBJECT-TYPE
      SYNTAX   INTEGER (1..65535)
      ACCESS   read-only
      STATUS   mandatory
      DESCRIPTION "<Definition> The I/O index for this row of the table. The
            range is 1 to ascIOmapMaxOutputs.
      <Object Identifier> 1.3.6.1.4.1.1206.4.2.1.13.6.1.1
      <Object Type> S"
::= { ascIOoutputMapTableEntry 1 }
```

#### 5.14.6.2 I/O Output Map Device Type

```
ascIOoutputMapDeviceType OBJECT-TYPE
      SYNTAX  INTEGER { unused (1),
                        custom (2),
                        fio (3),
                        ts1 (4),
                        biu (5),
                        siu (6),
                        aux (7) }
      ACCESS  read-write
      STATUS  mandatory
      DESCRIPTION "<Definition> This object is an selects the device type for
            this row of the table.
            A value of unused (1) means that this row of the table is unused
            (all values of ascIOoutputMapIOindex up to or ascIOmapMaxOutputs
            may not be needed by every mapping).
            A custom type is a manufacturer defined device which also
            requires a ascIOoutputMapDevicePNN and a
            ascIOoutputMapDevicePtype to fully specify the device.
            Values > 7 are reserved for future device types.
      <Object Identifier> 1.3.6.1.4.1.1206.4.2.1.13.6.1.2
      <Object Type> P"
```

 © 2023 AASHTO / ITE / NEMA

```
::= { ascIOoutputMapTableEntry 2 }
```

#### 5.14.6.3 I/O Output Map Custom Device Manufacturer

```
ascIOoutputMapDevicePNN  OBJECT-TYPE
      SYNTAX   INTEGER (0..65535)
      ACCESS   read-write
      STATUS   mandatory
      DESCRIPTION "<Definition> The object is used to further define a device
            type when ascIOoutputMapDeviceType is custom (2). The value of
            this object will be the manufacturer's Private Node Number (PNN)
            as assigned by NEMA (1.3.6.1.4.1.1206.3.PNN). This is the same
            identifier used for ASC custom blocks.
      <Object Identifier> 1.3.6.1.4.1.1206.4.2.1.13.6.1.3
      <Object Type> P"
::= { ascIOoutputMapTableEntry 3 }
```

#### 5.14.6.4 I/O Output Map Custom Device Type

```
ascIOoutputMapDevicePtype OBJECT-TYPE
      SYNTAX   INTEGER (0..255)
      ACCESS   read-write
      STATUS   mandatory
      DESCRIPTION "<Definition> The object is used to further define a device
            type when ascIOoutputMapDeviceType is custom (2). The value of
            this object will identify a custom device type unique to the
            manufacturer specified by ascIOoutputMapDevicePNN.
      <Object Identifier> 1.3.6.1.4.1.1206.4.2.1.13.6.1.4
      <Object Type> P"
::= { ascIOoutputMapTableEntry 4 }
```

#### 5.14.6.5 I/O Output Map Device Address

```
ascIOoutputMapDeviceAddr OBJECT-TYPE
      SYNTAX   INTEGER (0..255)
      ACCESS   read-write
      STATUS   mandatory
      DESCRIPTION "<Definition> An address for the device at this table row.
            The address is used for devices like BIUs and SIUs that require
            an address. The value should be zero if the address is not needed
            for this row.
            If the ascIOoutputMapDeviceType is biu (4), the address values
            are:
                     1   - Traffic Facilities BIU #1
                     2   - Traffic Facilities BIU #2
                     3   - Traffic Facilities BIU #3
                     4   - Traffic Facilities BIU #4
                     5-8 - reserved
                     9   - Detector BIU #1
                     10  - Detector BIU #2
                     11  - Detector BIU #3
                     12  - Detector BIU #4
                     13-16 - reserved
            Note that these values are the BIU SDLC address + 1.
```

© 2023 AASHTO / ITE / NEMA Copy Per MIB Distribution Permission

```
            If the ascIOoutputMapDeviceType is siu (5), the address values
            are:
                        1  - reserved
                        2  - 14-pack output SIU position 1
                        3  - reserved
                        4  - 14-pack output SIU position 3
                        5  -  6-pack output SIU position 4
                        6  -  6-pack output SIU position 1
                        7  -  6-pack output SIU position 2
                        8  -  6-pack output SIU position 3
                        9  - reserved
                        10 - input SIU #1
                        11 - input SIU #2
                        12 - input SIU #3
                        13 - input SIU #4
                        14 - input SIU #5
                        15 - reserved
            Note that these values are the SIU SDLC address + 1.
      <Object Identifier> 1.3.6.1.4.1.1206.4.2.1.13.6.1.5
      <Object Type> P"
::= { ascIOoutputMapTableEntry 5 }
```

#### 5.14.6.6 I/O Output Map Device Pin

```
ascIOoutputMapDevicePin OBJECT-TYPE
      SYNTAX   INTEGER (0..255)
      ACCESS   read-write
      STATUS   mandatory
      DESCRIPTION "<Definition> An index for the I/O pin at this table row.
            The range for this value will depend upon the value of other
            objects in the row.
            The range for ascIOmapDeviceType:
                  fio (3) pin range is AscIOmapFIOoutputs
                  ts1 (4) pin range is AscIOmapTS1outputs
                  biu (5) pin range is AscIOmapBIUoutputs
                  siu (6) pin range is AscIOmapSIUoutputs
                  aux (7) pin range is AscIOmapAUXoutputs
            The range for a custom device type will be determined by the
            manufacturer defining it.
      <Object Identifier> 1.3.6.1.4.1.1206.4.2.1.13.6.1.6
      <Object Type> P"
::= { ascIOoutputMapTableEntry 6 }
```

#### 5.14.6.7 I/O Output Map Function Type

```
ascIOoutputMapFuncType OBJECT-TYPE
      SYNTAX  INTEGER (0..65535)
      ACCESS  read-write
      STATUS  mandatory
      DESCRIPTION "<Definition> This object selects the function type for
            this row of the table. A value of 0 references the standard
            output functions defined by AscIOoutputType and the
            ascIOoutputMapFunction.
            Any other value is a manufacturer's Private Node Number (PNN) as
            assigned by NEMA (1.3.6.1.4.1.1206.3.PNN). In this case the
            function is defined by the PNN (the manufacturer),
```

 © 2023 AASHTO / ITE / NEMA

```
            ascIOoutputMapFuncPtype (which of the manufacturer's multiple
            function sets), and the ascIOoutputMapFunction.
      <Object Identifier> 1.3.6.1.4.1.1206.4.2.1.13.6.1.7
      <Object Type> P"
::= { ascIOoutputMapTableEntry 7 }
```

#### 5.14.6.8 I/O Output Map Custom Function Type

```
ascIOoutputMapFuncPtype OBJECT-TYPE
      SYNTAX   INTEGER (0..255)
      ACCESS   read-write
      STATUS   mandatory
      DESCRIPTION "<Definition> The object is used to further define a
            function type when ascIOoutputMapFuncType is not zero. The value
            of this object will identify a custom function type unique to the
            manufacturer specified by ascIOoutputMapDevicePNN.
      <Object Identifier> 1.3.6.1.4.1.1206.4.2.1.13.6.1.8
      <Object Type> P"
::= { ascIOoutputMapTableEntry 8 }
```

#### 5.14.6.9 I/O Output Map Function

```
ascIOoutputMapFunction OBJECT-TYPE
      SYNTAX   INTEGER (0..255)
      ACCESS   read-write
      STATUS   mandatory
      DESCRIPTION "<Definition> This object specifies the function that is
            mapped to the I/O pin specified by this row. For example, if
            ascIOoutputMapFuncType is zero (standard) then the function could
            be any AscIOoutputType value such as channelGreen (6).
      <Object Identifier> 1.3.6.1.4.1.1206.4.2.1.13.6.1.9
      <Object Type> P"
::= { ascIOoutputMapTableEntry 9 }
```

#### 5.14.6.10 I/O Output Map Function Index

```
ascIOoutputMapFuncIndex OBJECT-TYPE
      SYNTAX   INTEGER (0..255)
      ACCESS   read-write
      STATUS   mandatory
      DESCRIPTION "<Definition> An index for the function at this table row.
            For example, if ascIOoutputMapFuncType is zero (standard) and the
            ascIOoutputMapFunction is channelGreen (6), then this index will
            determine which channelGreen output it is (1 to maxChannels).
      <Object Identifier> 1.3.6.1.4.1.1206.4.2.1.13.6.1.11
      <Object Type> P"
::= { ascIOoutputMapTableEntry 11 }
```

### 5.14.7 I/O Output Map Status Table

```
ascIOoutputMapStatusTable   OBJECT-TYPE
      SYNTAX   SEQUENCE OF AscIOoutputMapStatusTableEntry
      ACCESS   not-accessible
      STATUS   mandatory
      DESCRIPTION "<Definition> A table containing status for the current
            mapping for an ASC controller's outputs.
```

© 2023 AASHTO / ITE / NEMA Copy Per MIB Distribution Permission

```
      <TableType> static
      <Object Identifier> 1.3.6.1.4.1.1206.4.2.1.13.7"
::= { ascIOmapping 7 }

ascIOoutputMapStatusTableEntry   OBJECT-TYPE
      SYNTAX   AscIOoutputMapStatusTableEntry
      ACCESS   not-accessible
      STATUS   mandatory
      DESCRIPTION "<Definition> This object defines a conceptual row in
            the ascIOoutputMapStatusTable.
      <Object Identifier> 1.3.6.1.4.1.1206.4.2.1.13.7.1"
      INDEX { ascIOmapNumber, ascIOoutputMapIOindex }
::= { ascIOoutputMapStatusTable   1 }

AscIOoutputMapStatusTableEntry ::= SEQUENCE {
   ascIOoutputMapDevPinDescr   OCTET STRING, -- description of output pin
   ascIOoutputMapDevPinStatus  INTEGER }     -- 0 or 1 for active
```

#### 5.14.7.1 I/O Output Map Device Pin Description

```
ascIOoutputMapDevPinDescr OBJECT-TYPE
      SYNTAX  OCTET STRING (SIZE (32))
      ACCESS  read-only
      STATUS  mandatory
      DESCRIPTION "<Definition> This object returns the name of the output
            pin, such as 'C1-39 Detector 2'. Since the physical pins are
            determined by the controller hardware, the value is read-only.
      <Object Identifier> 1.3.6.1.4.1.1206.4.2.1.13.7.1.1
      <Object Type> S"
::= { ascIOoutputMapStatusTableEntry 1 }
```

#### 5.14.7.2 I/O Output Map Device Pin Status

```
ascIOoutputMapDevPinStatus OBJECT-TYPE
      SYNTAX  INTEGER (0..1)
      ACCESS  read-only
      STATUS  mandatory
      DESCRIPTION "<Definition> This object returns the current status of an
            output pin: inactive/OFF (0) or active/ON (1).
      <Object Identifier> 1.3.6.1.4.1.1206.4.2.1.13.7.1.2"
::= { ascIOoutputMapStatusTableEntry 2 }
```

### 5.14.8 I/O Map Description Table

```
ascIOmapDescriptionTable   OBJECT-TYPE
      SYNTAX   SEQUENCE OF AscIOmapDescriptionTableEntry
      ACCESS   not-accessible
      STATUS   mandatory
      DESCRIPTION "<Definition> A table containing mapping for an ASC
            Controller's inputs and outputs to functions. The number of I/O
            map tables is equal to the value of ascIOmaxMaps.
            Each table contains a row for each input the supported by the
            ASC. The total number of rows in the table is ascIOmapMaxInputs.
            Only one I/O input map may be active at any one time, and is
            selected by ascIOactiveMap.
      <TableType> static
```

 © 2023 AASHTO / ITE / NEMA

```
      <Object Identifier> 1.3.6.1.4.1.1206.4.2.1.13.8"
::= { ascIOmapping 8 }

ascIOmapDescriptionTableEntry   OBJECT-TYPE
      SYNTAX   AscIOmapDescriptionTableEntry
      ACCESS   not-accessible
      STATUS   mandatory
      DESCRIPTION "<Definition> This object defines a conceptual set of rows
            in the ascIOinputMapTable and ascIOoutputMapTable tables
            corresponding to an ascIOmapNumber.
      <Object Identifier> 1.3.6.1.4.1.1206.4.2.1.13.8.1"
      INDEX { ascIOmapNumber }
::= { ascIOmapDescriptionTable   1 }

AscIOmapDescriptionTableEntry ::= SEQUENCE {
   ascIOmapDescription   OCTET STRING } -- description of table
```

#### 5.14.8.1 I/O Map Description

```
ascIOmapDescription OBJECT-TYPE
      SYNTAX  OCTET STRING (SIZE (32))
      ACCESS  read-write
      STATUS  mandatory
      DESCRIPTION "<Definition> This object returns the name of the I/O map.
            There is only one name for the I/O map for each value of
            ascIOmapNumber.
            This map name corresponds to ascIOinputMapTable and
            ascIOoutputMapTable rows with the same ascIOmapNumber index.
      <Object Identifier> 1.3.6.1.4.1.1206.4.2.1.13.8.1.1
      <Object Type> P"
::= { ascIOmapDescriptionTableEntry 1 }
```

### 5.14.9 I/O Map Input Functions

```
ascIOmapInputFunctions OBJECT IDENTIFIER ::= { ascIOmapping 9 }

-- Enumeration for I/O mapping input functions
AscIOinputType ::= INTEGER {
    unusedInput             (1),    -- an input pin that is unused, not
mapped
    ioUsedAsOutput          (2),    -- an I/O pin that is being used as an
output (SIU or BIU)
    logicInput              (3),    -- an input that is used only by the
programmable logic
    addressBit              (4),
    alarmInput              (5),
    alternateSequence       (6),
    autoFlashRequest        (7),
    cabinetDoorOpen         (8),
    callToNonActuated       (9),
    clockUpdate             (10),
    conflictMonitorStatus   (11),
    cycleAdvance            (12),
    dimmingEnable           (13),
    externalStart           (14),
    forceOffRing            (15),
    freeRequest             (16),
```

© 2023 AASHTO / ITE / NEMA 

```
    hardwareControl         (17),
    indicatorLampControl    (18),
    inhibitMaxRing          (19),
    intervalAdvance         (20),
    localFlashSense         (21),
    manualControlEnable     (22),
    max2Ring                (23),
    max3AllRings            (24),
    max4AllRings            (25),
    maxRecall               (26),
    maxWalk                 (27),
    minRecall               (28),
    mmuCmuFlashSense        (29),
    modeSelectBit           (30),
    offsetInput             (31),
    omitRedClearRing        (32),
    patternSelect           (33),
    pedestrianDetector      (34),
    pedestrianOmit          (35),
    pedestrianRecycleRing   (36),
    phaseHold               (37),
    phaseOmit               (38),
    preemptGateDown         (39),
    preemptGateUp           (40),
    preemptHealthy          (41),
    preemptInput            (42),
    preemptInputAdvanced    (43),
    priorityCheckout        (44),
    priorityRequest         (45),
    redRestRing             (46),
    specialFunctionInput    (47),
    stopTimeAllRings        (48),
    stopTimeRing            (49),
    tbcOnline               (50),
    testInput               (51),
    timingPlanInput         (52),
    vehicleDetector         (53),
    vehicleDetectorFault    (54),
    walkRestModifier        (55) }
```

#### 5.14.9.1 I/O Map Maximum Input Functions

```
ascIOmapMaxInputFunctions OBJECT-TYPE
      SYNTAX INTEGER (1..255)
      ACCESS read-only
      STATUS mandatory
      DESCRIPTION "<Definition> This object contains the maximum number of
            I/O mapping input functions this ASC supports. This object
            indicates the number of rows in the ascIOmapInputFuncTable.
            The value of this object is equal to the number of AscIOinputType
            enumerations.
      <Object Identifier> 1.3.6.1.4.1.1206.4.2.1.13.9.1
      <Object Type> S"
::= { ascIOmapInputFunctions 1 }
```

 © 2023 AASHTO / ITE / NEMA

#### 5.14.9.2 I/O Map Input Functions Table

```
ascIOmapInputFuncTable OBJECT-TYPE
      SYNTAX   SEQUENCE OF AscIOmapInputFuncEntry
      ACCESS   not-accessible
      STATUS   mandatory
      DESCRIPTION "<Definition> A table referencing the ASC I/O mapping input
            functions. These are functions that may be assigned to the ASC
            inputs.
            The number of rows in this table is equal to
            ascIOmapMaxInputFunctions. The entries in this table correspond
            to the values of the AscIOinputType enumeration.
      <TableType> static
      <Object Identifier> 1.3.6.1.4.1.1206.4.2.1.13.9.2"
::= { ascIOmapInputFunctions 2 }

ascIOmapInputFuncEntry   OBJECT-TYPE
      SYNTAX   AscIOmapInputFuncEntry
      ACCESS   not-accessible
      STATUS   mandatory
      DESCRIPTION "<Definition> This object defines a conceptual row in
            the ascIOmapInputFuncTable.
      <Object Identifier> 1.3.6.1.4.1.1206.4.2.1.13.9.2.1"
      INDEX { ascIOinputIndex }
::= { ascIOmapInputFuncTable 1 }

AscIOmapInputFuncEntry ::= SEQUENCE {
    ascIOinputIndex          INTEGER,
    ascIOinputMaxFuncIndex   INTEGER,
    ascIOinputFunctionName   OCTET STRING }
```

##### 5.14.9.2.1 I/O Map Input Functions Table Index

```
ascIOinputIndex   OBJECT-TYPE
      SYNTAX   INTEGER (1..255)
      ACCESS   read-only
      STATUS   mandatory
      DESCRIPTION "<Definition> Indicates the row number of the entry in the
            ascIOmapInputFuncTable. The value of this object shall not exceed
            the ascIOmapMaxInputFunctions value.
            These indexes correspond to the values of the AscIOinputType
            enumeration.
      <Object Identifier> 1.3.6.1.4.1.1206.4.2.1.13.9.2.1.1
      <Object Type> S"
::= { ascIOmapInputFuncEntry 1 }
```

##### 5.14.9.2.2 I/O Map Input Function Maximum Index

```
ascIOinputMaxFuncIndex   OBJECT-TYPE
      SYNTAX   INTEGER (1..255)
      ACCESS   read-only
      STATUS   mandatory
      DESCRIPTION "<Definition> Some input functions support an array of
            inputs, this object indicates the maximum array index for this
            input function.
      <Object Identifier> 1.3.6.1.4.1.1206.4.2.1.13.9.2.1.2
      <Object Type> S"
```

© 2023 AASHTO / ITE / NEMA Copy Per MIB Distribution Permission

```
::= { ascIOmapInputFuncEntry 2 }
```

#### 5.14.9.2.3 I/O Map Input Function Name

```
ascIOinputFunctionName OBJECT-TYPE
      SYNTAX  OCTET STRING (SIZE (32))
      ACCESS  read-only
      STATUS  mandatory
      DESCRIPTION "<Definition> This object contains an ASCII string
            describing the input function.
      <Object Identifier> 1.3.6.1.4.1.1206.4.2.1.13.9.2.1.3
      <Object Type> S"
::= { ascIOmapInputFuncEntry 3 }
```

### 5.14.10 I/O Map Output Functions

```
ascIOmapOutputFunctions OBJECT IDENTIFIER
::= { ascIOmapping 10 }

-- Enumeration for I/O mapping output functions
AscIOoutputType ::= INTEGER {
    unusedOutput            (1),    -- an output pin that is unused, not
mapped
    ioUsedAsInput           (2),    -- an I/O pin that is being used as an
input (SIU or BIU)
    logicOutput             (3),    -- an output function from the
programmable logic
    advWarnGrn              (4),
    advWarnRed              (5),
    alarmOutput             (6),
    automaticFlashStatus    (7),
    channelGreen            (8),
    channelRed              (9),
    channelYellow           (10),
    codedStatusBitA         (11),
    codedStatusBitB         (12),
    codedStatusBitC         (13),
    detectorResetSlots      (14),
    detectorReset           (15),
    faultMonitor            (16),
    flashingLogic           (17),
    freeStatus              (18),
    offsetOutput            (19),
    phaseCheck              (20),
    phaseNext               (21),
    phaseOn                 (22),
    preemptActive           (23),
    preemptActiveAdvanced   (24),
    specialFunctionOutput   (25),
    tbcAuxOutput            (26),
    timingPlanOutput        (27),
    voltageMonitor          (28),
    watchdog                (29) }
```

 © 2023 AASHTO / ITE / NEMA

#### 5.14.10.1 I/O Map Maximum Output Functions

```
ascIOmapMaxOutputFunctions OBJECT-TYPE
      SYNTAX INTEGER (1..255)
      ACCESS read-only
      STATUS mandatory
      DESCRIPTION "<Definition> This object contains the maximum number of
            I/O mapping output functions this ASC supports. This object
            indicates the number of rows in the ascIOmapOutputFuncTable.
            The value of this object is equal to the number of
            AscIOoutputType enumerations.
      <Object Identifier> 1.3.6.1.4.1.1206.4.2.1.13.10.1
      <Object Type> S"
::= { ascIOmapOutputFunctions 1 }
```

#### 5.14.10.2 I/O Map Output Functions Table

```
ascIOmapOutputFuncTable OBJECT-TYPE
       SYNTAX   SEQUENCE OF AscIOmapOutputFuncEntry
       ACCESS   not-accessible
       STATUS   mandatory
       DESCRIPTION "<Definition> A table referencing the ASC I/O mapping
            output functions. These are functions that may be assigned
            to the ASC outputs.
            The number of rows in this table is equal to
            ascIOmapMaxOutputFunctions.
            The entries in this table correspond to the values of the
            AscIOoutputType enumeration.
      <TableType> static
      <Object Identifier> 1.3.6.1.4.1.1206.4.2.1.13.10.2"
::= { ascIOmapOutputFunctions 2 }

ascIOmapOutputFuncEntry   OBJECT-TYPE
      SYNTAX   AscIOmapOutputFuncEntry
      ACCESS   not-accessible
      STATUS   mandatory
      DESCRIPTION "<Definition> This object defines a conceptual row in the
            ascIOmapOutputFuncTable.
      <Object Identifier> 1.3.6.1.4.1.1206.4.2.1.13.10.2.1"
      INDEX { ascIOoutputIndex }
::= { ascIOmapOutputFuncTable 1 }

AscIOmapOutputFuncEntry ::= SEQUENCE {
    ascIOoutputIndex          INTEGER,
    ascIOoutputMaxFuncIndex   INTEGER,
    ascIOoutputFunctionName   OCTET STRING }
```

##### 5.14.10.2.1 I/O Map Output Functions Table Index

```
ascIOoutputIndex   OBJECT-TYPE
      SYNTAX   INTEGER (1..255)
      ACCESS   read-only
      STATUS   mandatory
      DESCRIPTION "<Definition> Indicates the row number of the entry in the
            ascIOmapOutputFuncTable. The value of this object shall not
            exceed the ascIOmapMaxOutputFunctions value.
```

© 2023 AASHTO / ITE / NEMA 

```
            These indexes correspond to the values of the
            AscIOoutputType enumeration.
      <Object Identifier> 1.3.6.1.4.1.1206.4.2.1.13.10.2.1.1
      <Object Type> S"
::= { ascIOmapOutputFuncEntry 1 }
```

#### 5.14.10.2.2 I/O Map Output Function Maximum Index

```
ascIOoutputMaxFuncIndex   OBJECT-TYPE
      SYNTAX   INTEGER (1..255)
      ACCESS   read-only
      STATUS   mandatory
      DESCRIPTION "<Definition> Some output functions support an array of
            outputs, this object indicates the maximum array index for this
            output function.
      <Object Identifier> 1.3.6.1.4.1.1206.4.2.1.13.10.2.1.2
      <Object Type> S"
::= { ascIOmapOutputFuncEntry 2 }
```

#### 5.14.10.2.3 I/O Map Output Function Name

```
ascIOoutputFunctionName OBJECT-TYPE
      SYNTAX  OCTET STRING (SIZE (32))
      ACCESS  read-only
      STATUS  mandatory
      DESCRIPTION "<Definition> This object contains an ASCII string
            describing the output function.
      <Object Identifier> 1.3.6.1.4.1.1206.4.2.1.13.10.2.1.3
      <Object Type> S"
::= { ascIOmapOutputFuncEntry 3 }
```

### 5.14.11 I/O Map FIO Pins

```
ascIOmapFIO OBJECT IDENTIFIER ::= { ascIOmapping 11 }
```

#### 5.14.11.1 I/O Map FIO Input Pins

```
AscIOmapFIOinputs ::= INTEGER {     -- Enumeration for 2070-2A FIO (170)
inputs
    pinC1-39 (1),   -- Detector 2
    pinC1-40 (2),   -- Detector 16
    pinC1-41 (3),   -- Detector 8
    pinC1-42 (4),   -- Detector 22
    pinC1-43 (5),   -- Detector 3
    pinC1-44 (6),   -- Detector 17
    pinC1-45 (7),   -- Detector 9
    pinC1-46 (8),   -- Detector 23
    pinC1-47 (9),   -- Detector 6
    pinC1-48 (10),  -- Detector 20
    pinC1-49 (11),  -- Detector 12
    pinC1-50 (12),  -- Detector 26
    pinC1-51 (13),  -- RR1 Preempt
    pinC1-52 (14),  -- RR2 Preempt
    pinC1-53 (15),  -- Manual Control
    pinC1-54 (16),  -- Spare
    pinC1-55 (17),  -- Detector 15
```

 © 2023 AASHTO / ITE / NEMA

```
    pinC1-56 (18),  -- Detector 1
    pinC1-57 (19),  -- Detector 21
    pinC1-58 (20),  -- Detector 7
    pinC1-59 (21),  -- Detector 27
    pinC1-60 (22),  -- Detector 13
    pinC1-61 (23),  -- Detector 28
    pinC1-62 (24),  -- Detector 14
    pinC1-63 (25),  -- Detector 4
    pinC1-64 (26),  -- Detector 18
    pinC1-65 (27),  -- Detector 10
    pinC1-66 (28),  -- Detector 24
    pinC1-67 (29),  -- Ped Detector 1
    pinC1-68 (30),  -- Ped Detector 3
    pinC1-69 (31),  -- Ped Detector 2
    pinC1-70 (32),  -- Ped Detector 4
    pinC1-71 (33),  -- EVA Preempt
    pinC1-72 (34),  -- EVB Preempt
    pinC1-73 (35),  -- EVC Preempt
    pinC1-74 (36),  -- EVD Preempt
    pinC1-75 (37),  -- Spare
    pinC1-76 (38),  -- Detector 5
    pinC1-77 (39),  -- Detector 19
    pinC1-78 (40),  -- Detector 11
    pinC1-79 (41),  -- Detector 25
    pinC1-80 (42),  -- Interval Advance
    pinC1-81 (43),  -- Flash Sense
    pinC1-82 (44),  -- Stop Time
    pinC11-10 (45), -- C11 inputs all spare
    pinC11-11 (46),
    pinC11-12 (47),
    pinC11-13 (48),
    pinC11-15 (49),
    pinC11-16 (50),
    pinC11-17 (51),
    pinC11-18 (52),
    pinC11-19 (53),
    pinC11-20 (54),
    pinC11-21 (55),
    pinC11-22 (56),
    pinC11-23 (57),
    pinC11-24 (58),
    pinC11-25 (59),
    pinC11-26 (60),
    pinC11-27 (61),
    pinC11-28 (62),
    pinC11-29 (63),
    pinC11-30 (64) }
```

#### 5.14.11.2 I/O Map FIO Output Pins

```
AscIOmapFIOoutputs ::= INTEGER {    -- Enumeration for 2070-2A FIO (170)
outputs
    pinC1-2   (1),   -- Ped 4 red
    pinC1-3   (2),   -- Ped 4 green
    pinC1-4   (3),   -- Phase 4 red
    pinC1-5   (4),   -- Phase 4 yellow
    pinC1-6   (5),   -- Phase 4 green
```

© 2023 AASHTO / ITE / NEMA Copy Per MIB Distribution Permission

```
    pinC1-7   (6),   -- Phase 3 red
    pinC1-8   (7),   -- Phase 3 yellow
    pinC1-9   (8),   -- Phase 3 green
    pinC1-10  (9),   -- Ped 2 red
    pinC1-11  (10),  -- Ped 2 green
    pinC1-12  (11),  -- Phase 2 red
    pinC1-13  (12),  -- Phase 2 yellow
    pinC1-15  (13),  -- Phase 2 green
    pinC1-16  (14),  -- Phase 1 red
    pinC1-17  (15),  -- Phase 1 yellow
    pinC1-18  (16),  -- Phase 1 green
    pinC1-19  (17),  -- Ped 8 red
    pinC1-20  (18),  -- Ped 8 green
    pinC1-21  (19),  -- Phase 8 red
    pinC1-22  (20),  -- Phase 8 yellow
    pinC1-23  (21),  -- Phase 8 green
    pinC1-24  (22),  -- Phase 7 red
    pinC1-25  (23),  -- Phase 7 yellow
    pinC1-26  (24),  -- Phase 7 green
    pinC1-27  (25),  -- Ped 6 red
    pinC1-28  (26),  -- Ped 6 green
    pinC1-29  (27),  -- Phase 6 red
    pinC1-30  (28),  -- Phase 6 yellow
    pinC1-31  (29),  -- Phase 6 green
    pinC1-32  (30),  -- Phase 5 red
    pinC1-33  (31),  -- Phase 5 yellow
    pinC1-34  (32),  -- Phase 5 green
    pinC1-35  (33),  -- Ped 2 yellow
    pinC1-36  (34),  -- Ped 6 yellow
    pinC1-37  (35),  -- Ped 4 yellow
    pinC1-38  (36),  -- Ped 8 yellow
    pinC1-83  (37),  -- Spare
    pinC1-84  (38),  -- Spare
    pinC1-85  (39),  -- Overlap D red
    pinC1-86  (40),  -- Overlap D yellow
    pinC1-87  (41),  -- Overlap D green
    pinC1-88  (42),  -- Overlap C red
    pinC1-89  (43),  -- Overlap C yellow
    pinC1-90  (44),  -- Overlap C green
    pinC1-91  (45),  -- Spare
    pinC1-93  (46),  -- Spare
    pinC1-94  (47),  -- Overlap B red
    pinC1-95  (48),  -- Overlap B yellow
    pinC1-96  (49),  -- Overlap B green
    pinC1-97  (50),  -- Overlap A red
    pinC1-98  (51),  -- Overlap A yellow
    pinC1-99  (52),  -- Overlap A green
    pinC1-100 (53),  -- Spare
    pinC1-101 (54),  -- Flash status
    pinC1-102 (55),  -- Detector reset
    pinC1-103 (56),  -- Watchdog
    pinC11-1  (57),  -- all C11 outputs are spare
    pinC11-2  (58),
    pinC11-3  (59),
    pinC11-4  (60),
    pinC11-5  (61),
    pinC11-6  (62),
```

 © 2023 AASHTO / ITE / NEMA

```
    pinC11-7  (63),
    pinC11-8  (64) }
```

#### 5.14.12 I/O Map TS1 Pins

```
ascIOmapTS1 OBJECT IDENTIFIER ::= { ascIOmapping 12 }
```

##### 5.14.12.1 I/O Map TS1 Input Pins

```
AscIOmapTS1inputs ::= INTEGER {     -- Enumeration for type 2070-8 NEMA TS1
inputs
    pinA-f  (1),   -- Vehicle Detector 1
    pinA-g  (2),   -- Ped Detector 1
    pinA-h  (3),   -- Hold 1
    pinA-i  (4),   -- Force Off Ring 1
    pinA-j  (5),   -- Min Recall
    pinA-k  (6),   -- Manual Control
    pinA-m  (7),   -- CNA 1
    pinA-n  (8),   -- Test A
    pinA-q  (9),   -- Mode Bit A
    pinA-v  (10),  -- Ped Omit 2
    pinA-w  (11),  -- Omit Red Ring 1
    pinA-x  (12),  -- Red Rest Ring 1
    pinA-y  (13),  -- Mode Bit B
    pinA-z  (14),  -- CNA 2
    pinA-K  (15),  -- Vehicle Detector 2
    pinA-L  (16),  -- Ped Detector 2
    pinA-M  (17),  -- Hold 2
    pinA-N  (18),  -- Stop Time Ring 1
    pinA-P  (19),  -- Inhibit Max Ring 1
    pinA-R  (20),  -- External Start
    pinA-S  (21),  -- Interval Advance
    pinA-T  (22),  -- Lamp Control
    pinA-AA (23),  -- Test B
    pinA-BB (24),  -- Walk Rest Modifier
    pinA-EE (25),  -- Ped Omit 1
    pinA-FF (26),  -- Ped Recycle Ring 1
    pinA-GG (27),  -- Max 2 Ring 1
    pinA-HH (28),  -- Mode Bit C
    pinB-g  (29),  -- Phase Omit 4
    pinB-h  (30),  -- Hold 4
    pinB-i  (31),  -- Hold 3
    pinB-j  (32),  -- Ped Omit 3
    pinB-k  (33),  -- Ped Omit 6
    pinB-m  (34),  -- Ped Omit 7
    pinB-n  (35),  -- Ped Omit 8
    pinB-v  (36),  -- Spare
    pinB-x  (37),  -- Ped Omit 4
    pinB-z  (38),  -- Max 2 Ring 2
    pinB-B  (39),  -- Spare
    pinB-L  (40),  -- Vehicle Detector 4
    pinB-M  (41),  -- Ped Detector 4
    pinB-N  (42),  -- Vehicle Detector 3
    pinB-P  (43),  -- Ped Detector 3
    pinB-R  (44),  -- Phase Omit 3
    pinB-S  (45),  -- Phase Omit 2
    pinB-T  (46),  -- Ped Omit 5
```

© 2023 AASHTO / ITE / NEMA 

```
    pinB-U  (47),  -- Phase Omit 1
    pinB-V  (48),  -- Ped RECY R2
    pinB-W  (49),  -- Spare
    pinB-X  (50),  -- Spare
    pinC-a  (51),  -- Inhibit Max Ring 2
    pinC-b  (52),  -- Ttest C
    pinC-m  (53),  -- Hold 5
    pinC-n  (54),  -- Phase Omit 5
    pinC-p  (55),  -- Hold 6
    pinC-q  (56),  -- Phase Omit 6
    pinC-r  (57),  -- Phase Omit 7
    pinC-s  (58),  -- Phase Omit 8
    pinC-t  (59),  -- Vehicle Detector 8
    pinC-u  (60),  -- Red Rest Ring 2
    pinC-v  (61),  -- Omit Red Ring 2
    pinC-P  (62),  -- Vehicle Detector 5
    pinC-R  (63),  -- Ped Detector 5
    pinC-S  (64),  -- Vehicle Detector 6
    pinC-T  (65),  -- Ped Detector 6
    pinC-U  (66),  -- Ped Detector 7
    pinC-V  (67),  -- Vehicle Detector 7
    pinC-W  (68),  -- Ped Detector 8
    pinC-X  (69),  -- Hold 8
    pinC-Y  (70),  -- Force Off Ring 2
    pinC-Z  (71),  -- Stop Time Ring 2
    pinC-EE (72),  -- Hold 7
    pinD-a  (73),  -- Spare
    pinD-b  (74),  -- Alarm 1
    pinD-c  (75),  -- Alarm 2
    pinD-d  (76),  -- Alarm 3
    pinD-e  (77),  -- Alarm 4
    pinD-f  (78),  -- Alarm 5
    pinD-g  (79),  -- Flash In
    pinD-h  (80),  -- Conflict Monitor Status
    pinD-i  (81),  -- Door Open
    pinD-j  (82),  -- Special Function 1
    pinD-k  (83),  -- Special Function 2
    pinD-m  (84),  -- Special Function 3
    pinD-n  (85),  -- Special Function 4
    pinD-p  (86),  -- Special Function 5
    pinD-q  (87),  -- Special Function 6
    pinD-r  (88),  -- Special Function 7
    pinD-s  (89),  -- Special Function 8
    pinD-t  (90),  -- Preempt 1
    pinD-u  (91),  -- Preempt 2
    pinD-v  (92),  -- Preempt 3
    pinD-w  (93),  -- Preempt 4
    pinD-x  (94),  -- Preempt 5
    pinD-y  (95),  -- Preempt 6
    pinD-A  (96),  -- Vehicle Detector  9
    pinD-B  (97),  -- Vehicle Detector 10
    pinD-C  (98),  -- Vehicle Detector 11
    pinD-D  (99),  -- Vehicle Detector 12
    pinD-E  (100), -- Vehicle Detector 13
    pinD-F  (101), -- Vehicle Detector 14
    pinD-G  (102), -- Vehicle Detector 15
    pinD-H  (103), -- Vehicle Detector 16
```


© 2023 AASHTO / ITE / NEMA

```
    pinD-J  (104), -- Vehicle Detector 17
    pinD-K  (105), -- Vehicle Detector 18
    pinD-L  (106), -- Vehicle Detector 19
    pinD-M  (107), -- Vehicle Detector 20
    pinD-N  (108), -- Vehicle Detector 21
    pinD-P  (109), -- Vehicle Detector 22
    pinD-R  (110), -- Vehicle Detector 23
    pinD-S  (111), -- Vehicle Detector 24
    pinD-T  (112), -- Clock Update
    pinD-U  (113), -- Hardware Control
    pinD-V  (114), -- Cycle Advance
    pinD-W  (115), -- Max 3 Select
    pinD-X  (116), -- Max 4 Select
    pinD-Y  (117), -- Free
    pinD-Z  (118), -- Spare
    pinD-KK (119), -- Spare
    pinD-MM (120) } -- Spare
```

#### 5.14.12.2 I/O Map TS1 Output Pins

```
AscIOmapTS1outputs ::= INTEGER {    -- Enumeration for 2070-8 NEMA TS1
outputs
    pinA-a  (1),   -- Ped 1 Yellow
    pinA-b  (2),   -- Phase 2 Yellow
    pinA-c  (3),   -- Phase 2 Green
    pinA-d  (4),   -- Phase Check 2
    pinA-e  (5),   -- Phase On 2
    pinA-r  (6),   -- Status B Ring 1
    pinA-s  (7),   -- Phase 1 Green
    pinA-t  (8),   -- Ped 1 Green
    pinA-u  (9),   -- Phase Check 1
    pinA-A  (10),  -- Fault Monitor
    pinA-C  (11),  -- Voltage Monitor
    pinA-D  (12),  -- Phase 1 Red
    pinA-E  (13),  -- Ped 1 Red
    pinA-F  (14),  -- Phase 2 Red
    pinA-G  (15),  -- Ped 2 Red
    pinA-H  (16),  -- Ped 2 Yellow
    pinA-J  (17),  -- Ped 2 Green
    pinA-X  (18),  -- Flashing Logic
    pinA-Y  (19),  -- Status C Ring 1
    pinA-Z  (20),  -- Phase 1 Yellow
    pinA-CC (21),  -- Status A Ring 1
    pinA-DD (22),  -- Phase ON 1
    pinB-a  (23),  -- Ped 3 Red
    pinB-b  (24),  -- Phase 4 Green
    pinB-c  (25),  -- Phase 4 Yellow
    pinB-d  (26),  -- Ped 4 Green
    pinB-e  (27),  -- Phase On 4
    pinB-f  (28),  -- Phase Next 4
    pinB-p  (29),  -- Overlap A Yellow
    pinB-q  (30),  -- Overlap A Red
    pinB-r  (31),  -- Phase Check 3
    pinB-s  (32),  -- Phase On 3
    pinB-t  (33),  -- Phase Next 3
    pinB-u  (34),  -- Overlap D Red
    pinB-w  (35),  -- Overlap D Green
```

© 2023 AASHTO / ITE / NEMA 

```
    pinB-A  (36),  -- Phase Next 1
    pinB-C  (37),  -- Phase Next 2
    pinB-D  (38),  -- Phase 3 Green
    pinB-E  (39),  -- Phase 3 Yellow
    pinB-F  (40),  -- Phase 3 Red
    pinB-G  (41),  -- Phase 4 Red
    pinB-H  (42),  -- Ped 4 Yellow
    pinB-J  (43),  -- Ped 4 Red
    pinB-K  (44),  -- Phase Check 4
    pinB-Y  (45),  -- Ped 3 Green
    pinB-Z  (46),  -- Ped 3 Yellow
    pinB-AA (47),  -- Overlap A Green
    pinB-BB (48),  -- Overlap B Yellow
    pinB-CC (49),  -- Overlap B Red
    pinB-DD (50),  -- Overlap C Red
    pinB-EE (51),  -- Overlap D Yellow
    pinB-FF (52),  -- Overlap C Green
    pinB-GG (53),  -- Overlap B Green
    pinB-HH (54),  -- Overlap C Yellow
    pinC-c  (55),  -- Status C Ring 2
    pinC-d  (56),  -- Ped 8 Green
    pinC-e  (57),  -- Phase 8 Yellow
    pinC-f  (58),  -- Phase 7 Green
    pinC-g  (59),  -- Phase 6 Green
    pinC-h  (60),  -- Phase 6 Yellow
    pinC-i  (61),  -- Phase 5 Green
    pinC-j  (62),  -- Ped 5 Green
    pinC-k  (63),  -- Phase Check 5
    pinC-w  (64),  -- Ped 8 Yellow
    pinC-x  (65),  -- Phase 8  Green
    pinC-y  (66),  -- Ped 7 Red
    pinC-z  (67),  -- Ped 6 Red
    pinC-A  (68),  -- Status A Ring 2
    pinC-B  (69),  -- Status B Ring 2
    pinC-C  (70),  -- Ped 8 Red
    pinC-D  (71),  -- Phase 8 Red
    pinC-E  (72),  -- Phase 7 Yellow
    pinC-F  (73),  -- Phase 7 Red
    pinC-G  (74),  -- Phase 6 Red
    pinC-H  (75),  -- Phase 5 Red
    pinC-J  (76),  -- Phase 5 Yellow
    pinC-K  (77),  -- Ped 5 Yellow
    pinC-L  (78),  -- Ped 5 Red
    pinC-M  (79),  -- Phase Next 5
    pinC-N  (80),  -- Phase On 5
    pinC-AA (81),  -- Ped 6 Yellow
    pinC-BB (82),  -- Phase Check 6
    pinC-CC (83),  -- Phase ON 6
    pinC-DD (84),  -- Phase Next 6
    pinC-FF (85),  -- Phase Check 8
    pinC-GG (86),  -- Phase On 8
    pinC-HH (87),  -- Phase Next 8
    pinC-JJ (88),  -- Ped 7 Green
    pinC-KK (89),  -- Ped 7 Yellow
    pinC-LL (90),  -- Ped 6 Green
    pinC-MM (91),  -- Phase Check 7
    pinC-NN (92),  -- Phase On 7
```

Copy Per MIB Distribution Permission © 2023 AASHTO / ITE / NEMA

```
    pinC-PP (93),  -- Phase Next 7
    pinD-z  (94),  -- Alarm 1
    pinD-AA (95),  -- Alarm 2
    pinD-BB (96),  -- Special Function 1
    pinD-CC (97),  -- Special Function 2
    pinD-DD (98),  -- Special Function 3
    pinD-EE (99),  -- Special Function 4
    pinD-FF (100), -- Special Function 5
    pinD-GG (101), -- Special Function 6
    pinD-HH (102), -- Special Function 7
    pinD-JJ (103), -- Special Function 8
    pinD-LL (104) } -- Detector Reset
```

#### 5.14.13 I/O Map TS2 BIU Pins

```
ascIOmapBIU OBJECT IDENTIFIER ::= { ascIOmapping 13 }
```

##### 5.14.13.1 I/O Map TS2 BIU Input Pins

```
AscIOmapBIUinputs ::= INTEGER {     -- Enumeration for NEMA TS2 BIU inputs
(for each BIU)
    biuInputIO1   (1),
    biuInputIO2   (2),
    biuInputIO3   (3),
    biuInputIO4   (4),
    biuInputIO5   (5),
    biuInputIO6   (6),
    biuInputIO7   (7),
    biuInputIO8   (8),
    biuInputIO9   (9),
    biuInputIO10  (10),
    biuInputIO11  (11),
    biuInputIO12  (12),
    biuInputIO13  (13),
    biuInputIO14  (14),
    biuInputIO15  (15),
    biuInputIO16  (16),
    biuInputIO17  (17),
    biuInputIO18  (18),
    biuInputIO19  (19),
    biuInputIO20  (20),
    biuInputIO21  (21),
    biuInputIO22  (22),
    biuInputIO23  (23),
    biuInputIO24  (24),
    biuInputIN1   (25),
    biuInputIN2   (26),
    biuInputIN3   (27),
    biuInputIN4   (28),
    biuInputIN5   (29),
    biuInputIN6   (30),
    biuInputIN7   (31),
    biuInputIN8   (32),
    biuInputOPT1  (33),
    biuInputOPT2  (34),
    biuInputOPT3  (35),
    biuInputOPT4  (36) }
```

© 2023 AASHTO / ITE / NEMA 

#### 5.14.13.2 I/O Map TS2 BIU Output Pins

```
AscIOmapBIUoutputs ::= INTEGER {    -- Enumeration for NEMA TS2 BIU outputs
(for each BIU)
    biuOutputO1   (1),
    biuOutputO2   (2),
    biuOutputO3   (3),
    biuOutputO4   (4),
    biuOutputO5   (5),
    biuOutputO6   (6),
    biuOutputO7   (7),
    biuOutputO8   (8),
    biuOutputO9   (9),
    biuOutputO10  (10),
    biuOutputO11  (11),
    biuOutputO12  (12),
    biuOutputO13  (13),
    biuOutputO14  (14),
    biuOutputO15  (15),
    biuOutputIO1  (16),
    biuOutputIO2  (17),
    biuOutputIO3  (18),
    biuOutputIO4  (19),
    biuOutputIO5  (20),
    biuOutputIO6  (21),
    biuOutputIO7  (22),
    biuOutputIO8  (23),
    biuOutputIO9  (24),
    biuOutputIO10 (25),
    biuOutputIO11 (26),
    biuOutputIO12 (27),
    biuOutputIO13 (28),
    biuOutputIO14 (29),
    biuOutputIO15 (30),
    biuOutputIO16 (31),
    biuOutputIO17 (32),
    biuOutputIO18 (33),
    biuOutputIO19 (34),
    biuOutputIO20 (35),
    biuOutputIO21 (36),
    biuOutputIO22 (37),
    biuOutputIO23 (38),
    biuOutputIO24 (39) }
```

### 5.14.14 I/O Map ATS Cabinet SIU Pins

```
ascIOmapSIU OBJECT IDENTIFIER ::= { ascIOmapping 14 }
```

#### 5.14.14.1 I/O Map ATS Cabinet SIU Input Pins

```
AscIOmapSIUinputs ::= INTEGER {     -- Enumeration for ITS Cabinet SIU inputs
(for each SIU)
    siuInputIO0  (1),
    siuInputIO1  (2),
    siuInputIO2  (3),
```

 © 2023 AASHTO / ITE / NEMA

```
    siuInputIO3  (4),
    siuInputIO4  (5),
    siuInputIO5  (6),
    siuInputIO6  (7),
    siuInputIO7  (8),
    siuInputIO8  (9),
    siuInputIO9  (10),
    siuInputIO10 (11),
    siuInputIO11 (12),
    siuInputIO12 (13),
    siuInputIO13 (14),
    siuInputIO14 (15),
    siuInputIO15 (16),
    siuInputIO16 (17),
    siuInputIO17 (18),
    siuInputIO18 (19),
    siuInputIO19 (20),
    siuInputIO20 (21),
    siuInputIO21 (22),
    siuInputIO22 (23),
    siuInputIO23 (24),
    siuInputIO24 (25),
    siuInputIO25 (26),
    siuInputIO26 (27),
    siuInputIO27 (28),
    siuInputIO28 (29),
    siuInputIO29 (30),
    siuInputIO30 (31),
    siuInputIO31 (32),
    siuInputIO32 (33),
    siuInputIO33 (34),
    siuInputIO34 (35),
    siuInputIO35 (36),
    siuInputIO36 (37),
    siuInputIO37 (38),
    siuInputIO38 (39),
    siuInputIO39 (40),
    siuInputIO40 (41),
    siuInputIO41 (42),
    siuInputIO42 (43),
    siuInputIO43 (44),
    siuInputIO44 (45),
    siuInputIO45 (46),
    siuInputIO46 (47),
    siuInputIO47 (48),
    siuInputIO48 (49),
    siuInputIO49 (50),
    siuInputIO50 (51),
    siuInputIO51 (52),
    siuInputIO52 (53),
    siuInputIO53 (54),
    siuInputOPT1 (55),
    siuInputOPT2 (56),
    siuInputOPT3 (57),
    siuInputOPT4 (58) }
```

© 2023 AASHTO / ITE / NEMA

#### 5.14.14.2 I/O Map ATS Cabinet SIU Output Pins

```
AscIOmapSIUoutputs ::= INTEGER {    -- Enumeration for ITS Cabinet SIU
outputs (for each SIU)
    siuOutputIO0  (1),
    siuOutputIO1  (2),
    siuOutputIO2  (3),
    siuOutputIO3  (4),
    siuOutputIO4  (5),
    siuOutputIO5  (6),
    siuOutputIO6  (7),
    siuOutputIO7  (8),
    siuOutputIO8  (9),
    siuOutputIO9  (10),
    siuOutputIO10 (11),
    siuOutputIO11 (12),
    siuOutputIO12 (13),
    siuOutputIO13 (14),
    siuOutputIO14 (15),
    siuOutputIO15 (16),
    siuOutputIO16 (17),
    siuOutputIO17 (18),
    siuOutputIO18 (19),
    siuOutputIO19 (20),
    siuOutputIO20 (21),
    siuOutputIO21 (22),
    siuOutputIO22 (23),
    siuOutputIO23 (24),
    siuOutputIO24 (25),
    siuOutputIO25 (26),
    siuOutputIO26 (27),
    siuOutputIO27 (28),
    siuOutputIO28 (29),
    siuOutputIO29 (30),
    siuOutputIO30 (31),
    siuOutputIO31 (32),
    siuOutputIO32 (33),
    siuOutputIO33 (34),
    siuOutputIO34 (35),
    siuOutputIO35 (36),
    siuOutputIO36 (37),
    siuOutputIO37 (38),
    siuOutputIO38 (39),
    siuOutputIO39 (40),
    siuOutputIO40 (41),
    siuOutputIO41 (42),
    siuOutputIO42 (43),
    siuOutputIO43 (44),
    siuOutputIO44 (45),
    siuOutputIO45 (46),
    siuOutputIO46 (47),
    siuOutputIO47 (48),
    siuOutputIO48 (49),
    siuOutputIO49 (50),
    siuOutputIO50 (51),
    siuOutputIO51 (52),
    siuOutputIO52 (53),
```

 © 2023 AASHTO / ITE / NEMA

```
    siuOutputIO53 (54) }
```

#### 5.14.15 I/O Map Auxiliary Device Pins

```
ascIOmapAUX OBJECT IDENTIFIER ::= { ascIOmapping 15 }
```

##### 5.14.15.1 I/O Map Auxiliary Device Input Pins

```
AscIOmapAUXinputs ::= INTEGER {     -- Enumeration for AUX inputs
    auxInputFPSwitch (1),           -- front panel AUX switch
    auxInputIO0      (2),
    auxInputIO1      (3),
    auxInputIO2      (4),
    auxInputIO3      (5),
    auxInputIO4      (6),
    auxInputIO5      (7),
    auxInputIO6      (8),
    auxInputIO7      (9) }
```

##### 5.14.15.2 I/O Map Auxiliary Device Outputs

```
AscIOmapAUXoutputs ::= INTEGER {    -- Enumeration for AUX outputs
    auxOutputIO0  (1),
    auxOutputIO1  (2),
    auxOutputIO2  (3),
    auxOutputIO3  (4),
    auxOutputIO4  (5),
    auxOutputIO5  (6),
    auxOutputIO6  (7),
    auxOutputIO7  (8) }
```

### 5.15 SIU Port 1 Parameters

```
siuport1  OBJECT IDENTIFIER
::= { asc 14 }

-- This object is an identifier used to group all objects for
-- support of ITS Cabinet V1 Section 4.7.14.7.1 SIU Port 1 Operation.
```

#### 5.15.1 Maximum SIU Port 1 Addresses

```
maxSIUPort1Addresses   OBJECT-TYPE
      SYNTAX INTEGER (1..255)
      ACCESS read-only
      STATUS mandatory
      DESCRIPTION "<Definition> The Maximum Number of SIU Port 1 addresses
            this Actuated Controller Unit supports. This object indicates the
            maximum rows which shall appear in the siuPort1Table object.
      <Object Identifier> 1.3.6.1.4.1.1206.4.2.1.14.1
      <Object Type> S
      <Unit> address"
::= { siuport1 1 }
```

#### 5.15.2 SIU Port 1 Table

```
siuport1Table   OBJECT-TYPE
```

© 2023 AASHTO / ITE / NEMA Copy Per MIB Distribution Permission

```
      SYNTAX SEQUENCE OF SIUPort1Entry
      ACCESS not-accessible
      STATUS mandatory
      DESCRIPTION "<Definition> A table containing Actuated Controller Unit
            port 1 parameters. The number of rows in this table is equal to
            maxSIUPort1Addresses object. Address 255 is reserved for the
            Broadcast All address.
      <TableType> static
      <Object Identifier> 1.3.6.1.4.1.1206.4.2.1.14.2"
::= { siuport1 2 }

siuport1Entry   OBJECT-TYPE
      SYNTAX SIUPort1Entry
      ACCESS not-accessible
      STATUS mandatory
      DESCRIPTION
      "<Definition> This object defines a conceptual row in the SIU Port 1
            Table.
      <Object Identifier> 1.3.6.1.4.1.1206.4.2.1.14.2.1"
      INDEX { siuport1Number }
::= { siuport1Table 1 }

SIUPort1Entry ::= SEQUENCE {
      siuport1Number          INTEGER,
      siuport1DevicePresent   INTEGER,
      siuport1Status          INTEGER}
```

#### 5.15.2.1 SIU Port 1 Number

```
siuport1Number   OBJECT-TYPE
      SYNTAX INTEGER (1..255)
      ACCESS read-only
      STATUS mandatory
      DESCRIPTION "<Definition> The (SIU Port 1 address plus one) for objects
            in this row. This value shall not exceed the maxSIUPort1Addresses
            object value.
      <Object Identifier> 1.3.6.1.4.1.1206.4.2.1.14.2.1.1
      <Object Type> S
      <Unit> address"
::= { siuport1Entry 1 }
```

#### 5.15.2.2 SIU Port 1 Device Present

```
siuport1DevicePresent   OBJECT-TYPE
      SYNTAX INTEGER (0..1)
      ACCESS read-write
      STATUS mandatory
      DESCRIPTION "<Definition> This object is used to program the CU as to
            the presence or absence of a device for this SIU Port 1 address.
            The CU shall transmit Command Frames only to those devices that
            are present as determined by this programming.
      True (one) - the device is present.
      False (zero) - the device is not present.
      <Object Identifier> 1.3.6.1.4.1.1206.4.2.1.14.2.1.2
      <Object Type> C"
      REFERENCE "ITS Cabinet V1 Section 4.7.14.7.1"
::= { siuport1Entry 2 }
```

Copy Per MIB Distribution Permission © 2023 AASHTO / ITE / NEMA

#### 5.15.2.3 SIU Port 1 Status

```
siuport1Status OBJECT-TYPE
      SYNTAX INTEGER { other (1),
            online (2),
            responseFault (3)}
      ACCESS read-only
      STATUS mandatory
      DESCRIPTION "<Definition> This object indicates the communications
            status with the associated device:
            other: This indicates that some other communications fault has
                  been detected.
            online: This indicates that at least five of the most recent 10
                  response transfers were received correctly.
            responseFault: This indicates that more than 5 of the most recent
                  10 response transfers were received incorrectly.
      <Object Identifier> 1.3.6.1.4.1.1206.4.2.1.14.2.1.3
      <Object Type> S"
::= { siuport1Entry 3 }
```

### 5.16 RSU Interface

```
ascRsuPort OBJECT IDENTIFIER
::= { asc 15 }

-- This defines a node to configure communications for a connected vehicle
environment.
```

#### 5.16.1 RSU Interface Port

```
rsuCommPort   OBJECT-TYPE
      SYNTAX   INTEGER (0..255)
      ACCESS   read-write
      STATUS   mandatory
      DESCRIPTION "<Definition> This object defines the ifIndex for a row in
            the ifTable and the commPortTable that identifies a
            communications port that is used to exchange data with an RSU. A
            value of 0 indicates that there is no RSU port or RSU
            communications is disabled. The value shall not exceed the object
            maxCommPorts value.
      <Object Identifier> 1.3.6.1.4.1.1206.4.2.1.15.1
      <Object Type> P"
::= { ascRsuPort 1 }
```

#### 5.16.2 Maximum Number of RSU Ports

```
maxRsuPorts OBJECT-TYPE
      SYNTAX   INTEGER(0..16)
      ACCESS   read-only
      STATUS   mandatory
      DESCRIPTION "<Definition> This object contains the maximum number of
            logical RSU Ports this CU supports for a channel. This object
            indicates the maximum rows which shall appear in the rsuPortTable
            object.
      <Object Identifier> 1.3.6.1.4.1.1206.4.2.1.15.2
```

© 2023 AASHTO / ITE / NEMA Copy Per MIB Distribution Permission

```
      <Object Type> S
      <Unit> port"
::= { ascRsuPort 2 }
```

### 5.16.3 Logical RSU Ports Table

```
rsuPortTable   OBJECT-TYPE
      SYNTAX   SEQUENCE OF RsuPortEntry
      ACCESS   not-accessible
      STATUS   mandatory
      DESCRIPTION "<Definition> This table contains configuration and status
            information for logical ports to communicate with RSUs. The
            number of rows in this table is equal to the maxRsuPorts object.
      <TableType> static
      <Object Identifier> 1.3.6.1.4.1.1206.4.2.1.15.3"
::= { ascRsuPort 3 }

rsuPortEntry   OBJECT-TYPE
      SYNTAX   RsuPortEntry
      ACCESS   not-accessible
      STATUS   mandatory
      DESCRIPTION "<Definition> The configuration and status of a logical RSU
            port.
      <Object Identifier> 1.3.6.1.4.1.1206.4.2.1.15.3.1"
      INDEX  { rsuPortIndex }
::= { rsuPortTable 1 }

RsuPortEntry ::= SEQUENCE {
      rsuPortIndex      INTEGER,
      rsuPortPointer    INTEGER,
      rsuPortName       DisplayString,
      rsuPortPollingPeriod    INTEGER,
      rsuPortWatchdogTime     INTEGER,
      rsuPortWatchdogTimer    INTEGER,
      rsuPortNumber           INTEGER }
```

#### 5.16.3.1 RSU Port Index

```
rsuPortIndex OBJECT-TYPE
      SYNTAX INTEGER (1..16)
      ACCESS read-only
      STATUS mandatory
      DESCRIPTION "<Definition> This object provides the index into the RSU
            port table. This value shall not exceed the maxRsuPorts object
            value.
      <Object Identifier> 1.3.6.1.4.1.1206.4.2.1.15.3.1.1
      <Object Type> S"
::= { rsuPortEntry 1 }
```

#### 5.16.3.2 RSU Logical Name Translation Entry Pointer

```
rsuPortPointer OBJECT-TYPE
      SYNTAX INTEGER (1..255)
      ACCESS read-write
      STATUS mandatory
```

 © 2023 AASHTO / ITE / NEMA

```
      DESCRIPTION "<Definition> This value is equal to the
            logicalNameTranslationIndex for the logical name translation
            table entry where logicalNameTranslationName holds the logical
            name and logicalNameTranslationNetworkAddress holds the IP
            address of the RSU port. This value shall not exceed the
            logicalNameTranslationTableMaxEntries object value.
      <Object Identifier> 1.3.6.1.4.1.1206.4.2.1.15.3.1.2
      <Object Type> P"
::= { rsuPortEntry 2 }
```

#### 5.16.3.3 RSU Port Name

```
rsuPortName OBJECT-TYPE
      SYNTAX DisplayString (SIZE (0..255))
      ACCESS read-write
      STATUS mandatory
      DESCRIPTION "<Definition> A textual string describing the RSU or the
            location of the RSU.
      <Object Identifier> 1.3.6.1.4.1.1206.4.2.1.15.3.1.3
      <Object Type> P"
::= { rsuPortEntry 3 }
```

#### 5.16.3.4 RSU Interface Polling Period

```
rsuPortPollingPeriod   OBJECT-TYPE
      SYNTAX   INTEGER (0..65535)
      ACCESS   read-write
      STATUS   mandatory
      DESCRIPTION "<Definition> This object defines the interval, in
            milliseconds, between polls on the port identified by this row.
            This object assumes that the CU behaves as the manager when
            exchanging data with an RSU. A value of 0 indicates that polling
            is disabled. This object is not used if the CU is the SNMP agent
            between the ASC - RSU interface.
      <Object Identifier> 1.3.6.1.4.1.1206.4.2.1.15.3.1.4
      <Object Type> P
      <Unit> milliseconds"
::= { rsuPortEntry 4 }
```

#### 5.16.3.5 RSU Port Watchdog Time

```
rsuPortWatchdogTime   OBJECT-TYPE
      SYNTAX   INTEGER (0..65535)
      ACCESS   read-write
      STATUS   mandatory
      DESCRIPTION "<Definition> This object defines the maximum time
            duration, in milliseconds, allowable without activity on the port
            identified by this row. If the amount of time that activity was
            last detected exceeds this value, then a RSU watchdog no activity
            fault alarm is SET. A value of 0 disables the RSU Watchdog no
            activity fault alarm. This object is not used if
            rsuPortPollingPeriod is 0.
      <Object Identifier> 1.3.6.1.4.1.1206.4.2.1.15.3.1.5
      <Object Type> P
      <Unit> milliseconds"
::= { rsuPortEntry 5 }
```

© 2023 AASHTO / ITE / NEMA Copy Per MIB Distribution Permission

#### 5.16.3.6 RSU Port Watchdog Timer

```
rsuPortWatchdogTimer   OBJECT-TYPE
      SYNTAX   INTEGER (0..65535)
      ACCESS   read-only
      STATUS   mandatory
      DESCRIPTION "<Definition> This object defines the watchdog time, in
            milliseconds, which is the amount of time since activity was last
            detected on the port identified by this row (rsuPortIndex).
            Activity is defined as any valid data object received on the
            port. If this object exceeds rsuPortWatchdogTime, then a RSU
            watchdog no activity fault is reported. This object is not used
            if rsuPortPollingPeriod is 0.
      <Object Identifier> 1.3.6.1.4.1.1206.4.2.1.15.3.1.6
      <Object Type> S
      <Unit> milliseconds"
::= { rsuPortEntry 6 }
```

#### 5.16.3.7 RSU Port Number

```
rsuPortNumber   OBJECT-TYPE
      SYNTAX   INTEGER (0..65535)
      ACCESS   read-write
      STATUS   mandatory
      DESCRIPTION "<Definition> This object defines the port number for
            transmissions. An object value of 0 indicates the port is
            disabled.
      <Object Identifier> 1.3.6.1.4.1.1206.4.2.1.15.3.1.7
      <Object Type> P"
      DEFVAL { 0 }
::= { rsuPortEntry 7 }
```

### 5.17 ASC SPaT

```
ascSpat OBJECT IDENTIFIER
::= { asc 16 }

-- This defines a node to support signal phase and timing objects for a
connected vehicle environment.
```

#### 5.17.1 SPaT Data Timestamp

```
spatTimestamp   OBJECT-TYPE
      SYNTAX   OCTET STRING (SIZE(0 | 5))
      ACCESS   read-only
      STATUS   mandatory
      DESCRIPTION "<Definition> A 5-byte value representing the time of day
            the SPaT data is generated by the CU. The 5 bytes are:
            Byte 1: hours (0..23)
            Byte 2: minutes (0..59)
            Byte 3: seconds (0..60). 60 is used to support leap seconds.
            Byte 4-5: milliseconds (0..999)
      <Object Identifier> 1.3.6.1.4.1.1206.4.2.1.16.1
      <Object Type> S"
      DEFVAL { "" }
```

Copy Per MIB Distribution Permission © 2023 AASHTO / ITE / NEMA

```
::= { ascSpat 1 }
```

### 5.17.2 SPaT Enabled Lanes Command

```
spatEnabledLanesCommand   OBJECT-TYPE
      SYNTAX OCTET STRING
      ACCESS read-write
      STATUS deprecated
      DESCRIPTION "<Definition> To support SAE J2735, this object is used to
            establish the Enabled lanes for the device to be broadcast in a
            SPaT message. Each octet within the octet string contains the
            mapLaneIndex(s) (binary value) in the MAP plan data configuration
            that is broadcast to be ACTIVE.

            An octet string of SIZE(1) with a value of 0xFF indicates that
            the device shall cancel this command and shall revert back to the
            Enabled lanes defined by  enabledlaneconcurrency for the current
            time base action. Otherwise, the Enabled lanes defined is this
            command shall override the Enabled lanes defined in
            enabledlaneconcurrency.

            If the commanded set if Enabled lanes is valid, the new set of
            Enabled lanes will be broadcast at the top of the next cycle. If
            an unsupported / invalid set of Enabled lanes is called, then the
            spatPortStatus object shall be SET to enabledLanesError(5) for
            all valid entries in the spatPortTable.
      <Object Identifier> 1.3.6.1.4.1.1206.4.2.1.16.2
      <Object Type> P"
      REFERENCE "SAE J2735 DF_EnabledLaneList"
::= { ascSpat 2 }
```

### 5.17.3 SPaT Enabled Lanes Concurrency Table

```
spatEnabledLanesConcurrencyTable   OBJECT-TYPE
      SYNTAX   SEQUENCE OF SpatEnabledLanesConcurrencyEntry
      ACCESS   not-accessible
      STATUS   mandatory
      DESCRIPTION "<Definition> A table containing the revocable lanes that
            are allowed to be concurrently ACTIVE. The number of rows in this
            table is equal to the maxEnabledLanesConcurrency object.
      <TableType> static
      <Object Identifier> 1.3.6.1.4.1.1206.4.2.1.16.3"
::= { ascSpat 3 }

spatEnabledLanesConcurrencyEntry   OBJECT-TYPE
      SYNTAX   SpatEnabledLanesConcurrencyEntry
      ACCESS   not-accessible
      STATUS   mandatory
      DESCRIPTION "<Definition> The allowable lanes that may be ACTIVE
            concurrently.
      <Object Identifier> 1.3.6.1.4.1.1206.4.2.1.16.3.1"
      INDEX  { enabledLaneIndex }
::= { spatEnabledLanesConcurrencyTable 1 }

SpatEnabledLanesConcurrencyEntry::= SEQUENCE {
      enabledLaneIndex        INTEGER,
      enabledLaneConcurrency  OCTET STRING }
```

© 2023 AASHTO / ITE / NEMA 

#### 5.17.3.1 Enabled Lane Index

```
enabledLaneIndex   OBJECT-TYPE
      SYNTAX  INTEGER (1..254)
      ACCESS  read-only
      STATUS  mandatory
      DESCRIPTION "<Definition> The number for objects in this row. This
            value shall not exceed the maxEnabledLanesConcurrency object
            value.
      <Object Identifier> 1.3.6.1.4.1.1206.4.2.1.16.3.1.1
      <Object Type> S"
::= { spatEnabledLanesConcurrencyEntry 1 }
```

#### 5.17.3.2 Enabled Lane Concurrency

```
enabledLaneConcurrency   OBJECT-TYPE
      SYNTAX  OCTET STRING
      ACCESS  read-write
      STATUS  mandatory
      DESCRIPTION "<Definition> Each octet contains a revocable lane
            identifier that may be ACTIVE concurrently. The value could be a
            single octet. This object indicates a set of revocable lanes that
            may be simultaneously enabled.
      <Object Identifier> 1.3.6.1.4.1.1206.4.2.1.16.3.1.2
      <Object Type> P"
::= { spatEnabledLanesConcurrencyEntry 2 }
```

### 5.17.4 SPaT Message Options

```
spatOptions OBJECT-TYPE
      SYNTAX   INTEGER(0..255)
      ACCESS   read-write
      STATUS   mandatory
      DESCRIPTION "<Definition> Optional SPaT functions ( 0 = False/Disabled,
            1 = True/Enabled)
            Bit 3 - 7: Reserved
            Bit 2: MAP Validity. Indicates if the MAP data message
            broadcasted by the RSU is valid (1) or invalid (0). When this bit
            is one, the MAP Message broadcasted by the CV Roadside Process is
            considered valid. When this bit is 0, then the MAP message
            broadcasted by the RSU is considered invalid and should not be
            used except for test purposes.
            Bit 1: SPaT Validity. Indicates if the SPaT data for this CU is
            valid (1) or invalid (0). When this bit is one, the SPaT data
            provided by the controller is considered valid. When this bit is
            0, then the SPaT data provided by the controller is considered
            invalid and should not be used except for test purposes.
            Bit 0: Enabled SPaT. Provides a means to enable the CU to provide
            SPaT data to a management station or a RSU.
      <Object Identifier> 1.3.6.1.4.1.1206.4.2.1.16.4
      <Object Type> P"
::= { ascSpat 4 }
```

 © 2023 AASHTO / ITE / NEMA

### 5.17.5 SPaT RSU Ports Table

```
spatPortTable   OBJECT-TYPE
      SYNTAX   SEQUENCE OF SpatPortEntry
      ACCESS   not-accessible
      STATUS   mandatory
      DESCRIPTION "<Definition> This table contains configuration and status
            information for exchanging SPaT information with RSUs. The number
            of rows in this table is equal to the maxRsuPorts object.
      <TableType> static
      <Object Identifier> 1.3.6.1.4.1.1206.4.2.1.16.5"
::= { ascSpat 5 }

spatPortEntry   OBJECT-TYPE
      SYNTAX   SpatPortEntry
      ACCESS   not-accessible
      STATUS   mandatory
      DESCRIPTION "<Definition> The configuration and status to exchange SPaT
            data with a logical RSU port.
      <Object Identifier> 1.3.6.1.4.1.1206.4.2.1.16.5.1"
      INDEX  { rsuPortIndex }
::= { spatPortTable 1 }

SpatPortEntry ::= SEQUENCE {
      spatPortOptions   INTEGER,
      spatPortStatus    INTEGER,
      spatPortMapActivationCode     MapActivationCode }
```

#### 5.17.5.1 SPaT Port Options

```
spatPortOptions OBJECT-TYPE
      SYNTAX   INTEGER(0..255)
      ACCESS   read-write
      STATUS   mandatory
      DESCRIPTION "<Definition> Optional SPaT functions for this SPaT port(0
            = False/Disabled, 1 = True/Enabled)
            Bit 3 - 7: Reserved
            Bit 2: MAP Validity. Indicates if the MAP data message
            broadcasted by the RSU on this RSU port is valid (1) or invalid
            (0). When this bit is one, the MAP Message broadcasted by the CV
            Roadside Process is considered valid. When this bit is 0, then
            the MAP message broadcasted by the RSU is considered invalid and
            should not be used except for test purposes.
            Bit 1: SPaT Validity. Indicates if the SPaT data on this RSU port
            is valid (1) or invalid (0). When this bit is one, the SPaT data
            provided by the controller is considered valid. When this bit is
            0, then the SPaT data provided by the controller is considered
            invalid and should not be used except for test purposes.
            Bit 0: Enabled SPaT. Provides a means to enable the CU to
            exchange SPaT data on this RSU port.
      <Object Identifier> 1.3.6.1.4.1.1206.4.2.1.16.5.1.1
      <Object Type> P"
::= { spatPortEntry 1 }
```

#### 5.17.5.2 SPaT Port Status

```
spatPortStatus OBJECT-TYPE
```

© 2023 AASHTO / ITE / NEMA Copy Per MIB Distribution Permission

```
      SYNTAX   INTEGER { other(1),
            disabled(2),
            normal(3),
            mapError(4),
            enabledLanesError(5) }
      ACCESS   read-only
      STATUS   mandatory
      DESCRIPTION "<Definition> The status for exchanging SPaT data for this
            RSU port.
            other: A status not defined by this standard.
            disabled: The capability to provide SPaT data is disabled.
            normal: The CU is providing SPaT data.
            mapError: The CU has stopped providing SPaT data because of an
            inconsistency in the spatPortMapActivationCode.
            enabledLanesError: The CU has stopped providing SPaT data because
            of a consistency error with the SPaT enabled lanes concurrency
            table (spatEnabledLanesConcurrencyTable). Note: Bit 13 in the
            spatStatus2 is also enabled.
      <Object Identifier> 1.3.6.1.4.1.1206.4.2.1.16.5.1.2
      <Object Type> S"
::= { spatPortEntry 2 }
```

#### 5.17.5.3 SPaT Port MAP Activation Code

```
spatPortMapActivationCode OBJECT-TYPE
      SYNTAX   MapActivationCode
      ACCESS   read-write
      STATUS   mandatory
      DESCRIPTION "<Definition> Represents the current mapActivationCode for
            this RSU port that the signal patterns on the CU are programmed
            for. The spatPortMapActivationCode value in this row should match
            the mapActivatePlan value for the RSU on this RSU port.
            This object allows the CU to compare and confirm that the signal
            phase and timing data matches the MAP data that may be broadcast
            by the RSU.
      <Object Identifier> 1.3.6.1.4.1.1206.4.2.1.16.5.1.3
      <Object Type> P"
::= { spatPortEntry 3 }
```

### 5.17.6 Current Tick Counter

```
ascCurrentTick OBJECT-TYPE
      SYNTAX   INTEGER (0..36000)
      ACCESS   read-only
      STATUS   deprecated
      DESCRIPTION "<Definition> This object is a counter of the number of
            elapsed ASC traffic processing ticks. The value is incremented by
            1 (decisecond) every time the ASC completes its tenth of a second
            processing and commits a new set of IO signal states.

            The object is represented as a rolling counter with a zero
            representing the top of the hour. If the counter were to be
            incremented beyond 35999 the value shall roll over back to 0.
            Values equal to or greater than 36000 are reserved.
      <Object Identifier> 1.3.6.1.4.1.1206.4.2.1.16.6
      <Object Type> S
      <Unit> tenth of a second"
```

 © 2023 AASHTO / ITE / NEMA

```
::= { ascSpat 6 }
```

### 5.17.7 Current Tick Counter—Milliseconds

```
ascCurrentTickMsOffset OBJECT-TYPE
      SYNTAX   INTEGER (0..99)
      ACCESS   read-only
      STATUS   mandatory
      DESCRIPTION "<Definition> This object reflects the elapsed milliseconds
            within the current ASC traffic processing tick at the moment this
            object was encoded and transmitted. The main purpose of this
            object is to provide millisecond accuracy when calculating the
            future time points defined in the signalStatusTable2. It is
            important to note that this object is intended to be used with a
            remote NTCIP manager polling or issuing GET requests on the
            ascCurrentTick2 object. If ascCurrentTick2 is pushed, SET, or
            otherwise event driven then the ascCurrentTickMsOffset will not
            be useful as the ascCurrentTick2 object will be transmitted
            exactly on tick boundaries (ie always when ascCurrentTickMsOffset
            is 0). If an NTCIP manager is polling the ASC for the tick count
            it is recommended that the manager request both ascCurrentTick2
            and ascCurrentMsTickOffset in a combined atomic varbind PDU to
            guarantee consistency between both objects.
      <Object Identifier> 1.3.6.1.4.1.1206.4.2.1.16.7
      <Object Type> S
      <Unit> millisecond"
::= { ascSpat 7 }
```

### 5.17.8 Current Tick Counter V2

```
ascCurrentTick2 OBJECT-TYPE
      SYNTAX   INTEGER (0..36111)
      ACCESS   read-only
      STATUS   mandatory
      DESCRIPTION "<Definition> This object is a counter of the number of
            elapsed ASC traffic processing ticks. The value is incremented by
            1 (decisecond) every time the ASC completes its tenth of a second
            processing and commits a new set of IO signal states.

            The object is represented as a rolling counter with a zero
            representing the top of the hour. If the counter were to be
            incremented beyond 35999, unless a leap seconds occur, the value
            shall roll over back to 0. The values 36000..36009 are used when
            a leap second occurs. The values 36010..36110 are reserved for
            future use. 36111 is to be used when the value is undefined or
            unknown.
            See Annex F.3.3.1 for additional guidance.
      <Object Identifier> 1.3.6.1.4.1.1206.4.2.1.16.8
      <Object Type> S
      <Unit> tenth of a second"
      REFERENCE "SAE J2735 DE_TimeMark"
      DEFVAL { 36111 }
::= { ascSpat 8 }
```

© 2023 AASHTO / ITE / NEMA Copy Per MIB Distribution Permission

### 5.17.9 Maximum Signal Groups

```
maxSignalGroups   OBJECT-TYPE
      SYNTAX   INTEGER(1..255)
      ACCESS   read-only
      STATUS   mandatory
      DESCRIPTION "<Definition> This object indicates the maximum rows which
            shall appear in the signalGroupEntryTable object.
      <Object Identifier> 1.3.6.1.4.1.1206.4.2.1.16.9
      <Object Type> S
      <Unit> signalGroupID"
::= { ascSpat 9 }
```

### 5.17.10 Signal Group Entry Table

```
signalGroupEntryTable   OBJECT-TYPE
      SYNTAX   SEQUENCE OF SignalGroupEntry
      ACCESS   not-accessible
      STATUS   mandatory
      DESCRIPTION "<Definition> This table contains configuration information
            for a signalGroupID at a signalized intersection. The number of
            rows in this table is equal to the maxSignalGroups object. See
            Annex F.3.3.5.1 for additional guidance.
      <TableType> static
      <Object Identifier> 1.3.6.1.4.1.1206.4.2.1.16.10"
::= { ascSpat 10 }

signalGroupEntry   OBJECT-TYPE
      SYNTAX   SignalGroupEntry
      ACCESS   not-accessible
      STATUS   mandatory
      DESCRIPTION "<Definition> Parameters for specific signal groups at an
            intersection.
      <Object Identifier> 1.3.6.1.4.1.1206.4.2.1.16.10.1"
      INDEX  { signalGroupEntryNumber }
::= { signalGroupEntryTable 1 }

SignalGroupEntry ::= SEQUENCE {
      signalGroupEntryNumber        INTEGER,
      signalGroupIntersection       INTEGER,
      signalGroupID                 INTEGER,
      signalGroupControlSource      INTEGER,
      signalGroupControlType        INTEGER,
      signalGroupGreenType          INTEGER,
      signalGroupRedType            INTEGER,
      signalGroupPermissiveControlSource INTEGER,
      signalGroupPermissiveControlType INTEGER,
      signalGroupLane               INTEGER }
```

#### 5.17.10.1 Signal Group Entry Number

```
signalGroupEntryNumber   OBJECT-TYPE
      SYNTAX   INTEGER (1..255)
      ACCESS   read-only
      STATUS   mandatory
      DESCRIPTION "<Definition> The number for objects in this row. This
            value shall not exceed the maxSignalGroups object value.
```

 © 2023 AASHTO / ITE / NEMA

```
      <Object Identifier> 1.3.6.1.4.1.1206.4.2.1.16.10.1.1
      <Object Type> S"
::= { signalGroupEntry 1 }
```

#### 5.17.10.2 Signal Group Intersection

```
signalGroupIntersection  OBJECT-TYPE
      SYNTAX   INTEGER (0..65535)
      ACCESS   read-write
      STATUS   mandatory
      DESCRIPTION "<Definition> The number is used to uniquely define an
            intersection within the region. A value of 0 indicates that the
            row is disabled and all other values in the row are not valid.
      <Object Identifier> 1.3.6.1.4.1.1206.4.2.1.16.10.1.2
      <Object Type> P"
      REFERENCE "SAE J2735 DE_IntersectionID"
      DEFVAL { 0 }
::= { signalGroupEntry 2 }
```

#### 5.17.10.3 Signal Group Identifier

```
signalGroupID  OBJECT-TYPE
      SYNTAX   INTEGER (0..255)
      ACCESS   read-write
      STATUS   mandatory
      DESCRIPTION "<Definition> The number used to map between a movement
            phase state (and its timings) in the CU and movements defined in
            a MAP message for the intersection. A value of 255 is reserved to
            indicate a permanent green movement state. A value of 0 indicates
            not available or not known.
      <Object Identifier> 1.3.6.1.4.1.1206.4.2.1.16.10.1.3
      <Object Type> P"
      REFERENCE "SAE J2735 DE_SignalGroupID"
      DEFVAL { 255 }
::= { signalGroupEntry 3 }
```

#### 5.17.10.4 Signal Group Control Source Parameter

```
signalGroupControlSource  OBJECT-TYPE
      SYNTAX   INTEGER (0..255)
      ACCESS   read-write
      STATUS   mandatory
      DESCRIPTION "<Definition> This object defines which Phase or Overlap
            controls the signal group. The value shall not exceed maxPhases
            or maxOverlaps as determined by the signalGroupControlType
            object:
      Value 00 = No Control  (Not In Use)
      Value 01 = Phase 01 or Overlap A
      Value 02 = Phase 02 or Overlap B
      ||
      Value 15 = Phase 15 or Overlap O
      Value 16 = Phase 16 or Overlap P
      etc.
      <Object Identifier> 1.3.6.1.4.1.1206.4.2.1.16.10.1.4
      <Object Type> P"
      DEFVAL { 0 }
```

© 2023 AASHTO / ITE / NEMA Copy Per MIB Distribution Permission

```
::= { signalGroupEntry 4 }
```

#### 5.17.10.5 Signal Group Control Type

```
signalGroupControlType  OBJECT-TYPE
      SYNTAX   INTEGER {
            other (1),
            phaseVehicle (2),
            phasePedestrian (3),
            overlap (4),
            pedOverlap (5),
            queueJump (6) }
      ACCESS   read-write
      STATUS   mandatory
      DESCRIPTION "<Definition> This object defines the type of control for
            the signal group:
      other: The signal group is not controlled by a type defined by this
            standard. Per NTCIP 8004 v02, an attempt to write a value of
            'other' shall return a badValue error. A user- or manufacturer-
            specific object is permitted to extend the possible states.
      phaseVehicle: The signal group is for a vehicle phase, bicycle phase,
            or transit phase.
      phasePedestrian: The signal group is for a pedestrian phase.
      overlap: The signal group is for an overlap for vehicles, bicycles, or
            transit.
      pedOverlap: The signal group is for a pedestrian overlap.
      queueJump: The signal group is for a queue jump, typically transit
            priority.
      <Object Identifier> 1.3.6.1.4.1.1206.4.2.1.16.10.1.5
      <Object Type> P"
::= { signalGroupEntry 5 }
```

#### 5.17.10.6 Signal Group Green Type

```
signalGroupGreenType  OBJECT-TYPE
      SYNTAX   INTEGER {
            other (1),
            preMovement (2),
            permissiveMovementAllowed (3),
            protectedMovementAllowed (4),
            protectedPermissive (5)}
      ACCESS   read-write
      STATUS   mandatory
      DESCRIPTION "<Definition> This object defines the type of Green to be
            indicated for the signal group in a SPaT message:
      other: The signal group green type is not defined by this standard. Per
            NTCIP 8004 v02, an attempt to write a value of 'other' shall
            return a badValue error. A user- or manufacturer-specific object
            is permitted to extend the possible states.
      preMovement: Prepare to proceed. Not common in the US.
      permissiveMovementAllowed: The signal group is a permissive green and
            may have to yield to conflicting traffic.
      protectedMovementAllowed: The signal group is a protected green and has
            the right-of-way.
      protectedPermissive: Indicates that the movement for the signal group
            can be protected during some portions of the cycle and permissive
            during other portions of the cycle. The
```

 © 2023 AASHTO / ITE / NEMA

```
            signalGroupPermissiveControlSource and
            signalGroupPermissiveControlType objects determine if the
            movement is protected or permissive.
      <Object Identifier> 1.3.6.1.4.1.1206.4.2.1.16.10.1.6
      <Object Type> P"
      REFERENCE "SAE J2735 DE_MovementPhaseState"
::= { signalGroupEntry 6 }
```

#### 5.17.10.7 Signal Group Red Type

```
signalGroupRedType  OBJECT-TYPE
      SYNTAX   INTEGER {
            other (1),
            stopThenProceed (2),
            stopAndRemain (3)}
      ACCESS   read-write
      STATUS   mandatory
      DESCRIPTION "<Definition> This object defines the type of Red to be
            indicated for the signal group in a SPaT message:
      other: The signal group red type is not defined by this standard. Per
            NTCIP 8004 v02, an attempt to write a value of 'other' shall
            return a badValue error. A user- or manufacturer-specific object
            is permitted to extend the possible states.
      stopThenProceed: Indicates the vehicle must stop at the stop line when
            the signal indication is red. It may then proceed if it is safe.
      stopAndRemain: Indicates the traveler must stop and remain at the stop
            line when the signal indication is red. It may not proceed.
      <Object Identifier> 1.3.6.1.4.1.1206.4.2.1.16.10.1.7
      <Object Type> P"
      REFERENCE "SAE J2735 DE_MovementPhaseState"
::= { signalGroupEntry 7 }
```

#### 5.17.10.8 Permissive Signal Group Control Source Parameter

```
signalGroupPermissiveControlSource  OBJECT-TYPE
      SYNTAX   INTEGER (0..255)
      ACCESS   read-write
      STATUS   mandatory
      DESCRIPTION "<Definition> If signalGroupGreenType is
            protectedPermissive(5) for the row, this object in combination
            with signalGroupPermissiveControlType identifies which phase or
            overlap controls the permissive portion of the protected-
            permissive movement. If signalGroupGreenType is any value other
            than protectedPermissive(5), then this object is ignored. The
            value shall not exceed maxPhases or maxOverlaps as determined by
            the signalGroupPermissiveControlType object:
            Value 00 = No Control  (Not In Use)
            Value 01 = Phase 01 or Overlap A
            Value 02 = Phase 02 or Overlap B
            ||
            Value 15 = Phase 15 or Overlap O
            Value 16 = Phase 16 or Overlap P
            etc.
      <Object Identifier> 1.3.6.1.4.1.1206.4.2.1.16.10.1.8
      <Object Type> P"
      DEFVAL { 0 }
::= { signalGroupEntry 8 }
```

© 2023 AASHTO / ITE / NEMA Copy Per MIB Distribution Permission

#### 5.17.10.9 Permissive Signal Group Control Type

```
signalGroupPermissiveControlType  OBJECT-TYPE
      SYNTAX   INTEGER {
            other (1),
            none (2),
            phaseVehicle (3),
            phasePedestrian (4),
            overlap (5),
            pedOverlap (6),
            queueJump (7) }
      ACCESS   read-write
      STATUS   mandatory
      DESCRIPTION "<Definition> If signalGroupGreenType is
            protectedPermissive(5) for the row, this object in combination
            with signalGroupPermissiveControlSource identifies which phase or
            overlap controls the permissive portion of the protected-
            permissive movement. If signalGroupGreenType is any value other
            than protectedPermissive(5), then this object is ignored.
      other: The signal group is not controlled by a type defined by this
            standard. Per NTCIP 8004 v02, an attempt to write a value of
            'other' shall return a badValue error. A user- or manufacturer-
            specific object is permitted to extend the possible states.
      none: The signal group is not dependent on another phase nor overlap.
      phaseVehicle: The signal group is dependent on a vehicle phase, bicycle
            phase, or transit phase.
      phasePedestrian: The signal group is dependent on a pedestrian phase.
      Overlap: The signal group is dependent on an overlap for vehicles,
            bicycles, or transit.
      pedOverlap: The signal group is dependent on a pedestrian overlap.
      queueJump: The signal group is dependent on a queue jump, typically
            transit priority.
      <Object Identifier> 1.3.6.1.4.1.1206.4.2.1.16.10.1.9
      <Object Type> P"
      DEFVAL { none }
::= { signalGroupEntry 9 }
```

#### 5.17.10.10 Signal Group Enabled Lane

```
signalGroupLane  OBJECT-TYPE
      SYNTAX   INTEGER (0..254)
      ACCESS   read-write
      STATUS   mandatory
      DESCRIPTION "<Definition> The value is equal to the enabledLaneIndex in
            the spatEnabledLanesConcurrencyTable. Each octet within the octet
            string for enabledLaneConcurrency in that row contains the
            (revocable) lane number that must be enabled for this signal
            group to be enabled. If all specified lanes are enabled, then
            this signal group is enabled and in use. Otherwise, the signal
            group is disabled and not used. A value of 0 indicates that this
            signal group is not dependent on a revocable lane. This value
            shall not exceed the maxEnabledLanesConcurrency object value.
      <Object Identifier> 1.3.6.1.4.1.1206.4.2.1.16.10.1.10
      <Object Type> P"
      DEFVAL { 0 }
::= { signalGroupEntry 10 }
```

Copy Per MIB Distribution Permission © 2023 AASHTO / ITE / NEMA

### 5.17.11 Maximum Agency Signal State Entries

```
maxAgencySignalStates   OBJECT-TYPE
      SYNTAX   INTEGER (3..255)
      ACCESS   read-only
      STATUS   mandatory
      DESCRIPTION "<Definition> This object indicates the maximum rows which
            shall appear in the agencySignalStateTable object.
      <Object Identifier> 1.3.6.1.4.1.1206.4.2.1.16.11
      <Object Type> S"
::= { ascSpat 11 }
```

### 5.17.12 Agency Signal State Table

```
agencySignalStateTable   OBJECT-TYPE
      SYNTAX   SEQUENCE OF AgencySignalStateEntry
      ACCESS   not-accessible
      STATUS   mandatory
      DESCRIPTION "<Definition> This table is a lookup table to determine the
            movement phase state for a signal group. See Annex F.3.3.5.2 for
            additional guidance and see Figure 15 for the default values for
            the table.
      <Object Identifier> 1.3.6.1.4.1.1206.4.2.1.16.12"
::= { ascSpat 12 }

agencySignalStateEntry   OBJECT-TYPE
      SYNTAX   AgencySignalStateEntry
      ACCESS   not-accessible
      STATUS   mandatory
      DESCRIPTION "<Definition> This table defines the signal state to
            provide for a signal group in the SPaT message based upon the
            parameters set in the signalGroupEntryTable.
      <Object Identifier> 1.3.6.1.4.1.1206.4.2.1.16.12.1"
      INDEX  { agencySignalStateNumber }
::= { agencySignalStateTable 1 }

AgencySignalStateEntry ::= SEQUENCE {
      agencySignalStateNumber       INTEGER,
      agencySignalStateColor        INTEGER,
      agencySignalStateControlType  INTEGER,
      agencySignalStateOptions      INTEGER,
      agencySignalStateValue        INTEGER }
```

#### 5.17.12.1 Agency Signal State Entry Number

```
agencySignalStateNumber   OBJECT-TYPE
      SYNTAX   INTEGER (1..255)
      ACCESS   read-only
      STATUS   mandatory
      DESCRIPTION "<Definition> The number for objects in this row. This
            value shall not exceed the maxAgencySignalStates object value.
      <Object Identifier> 1.3.6.1.4.1.1206.4.2.1.16.12.1.1
      <Object Type> S"
::= { agencySignalStateEntry 1 }
```

© 2023 AASHTO / ITE / NEMA Copy Per MIB Distribution Permission

#### 5.17.12.2 Agency Signal State Color

```
agencySignalStateColor  OBJECT-TYPE
      SYNTAX   INTEGER {
            other (1),
            red (2),
            yellow (3),
            green (4),
            dark (5),
            flashingRed (6),
            flashingYellow (7) }
      ACCESS   read-write
      STATUS   mandatory
      DESCRIPTION "<Definition> This object indicates the color of the phase
            or overlap that the signal group is associated with to determine
            a signal state to broadcast in a SPaT message.
      other: The phase or overlap is not defined by the standard.  Per NTCIP
            8004 v02, an attempt to write a value of 'other' shall return a
            badValue error. A user- or manufacturer-specific object is
            permitted to extend the possible states.
      red: The phase or overlap is red. If the agencySignalStateControlType
            object is pedestrian(3), this value indicates a Steady Don't
            Walk.
      yellow: The phase or overlap is yellow.
      green: The phase or overlap is green. If the
            agencySignalStateControlType object is pedestrian(3), this value
            indicates a Walk.
      dark: The phase or overlap is dark.
      flashingRed: The phase or overlap is Flashing Red. If the
            agencySignalStateControlType object is pedestrian(3), this value
            indicates a Flashing Don't Walk.
      flashingYellow: The phase or overlap is Flashing Yellow.
      <Object Identifier> 1.3.6.1.4.1.1206.4.2.1.16.12.1.2
      <Object Type> P"
::= { agencySignalStateEntry 2 }
```

#### 5.17.12.3 Agency Signal State Control Type

```
agencySignalStateControlType  OBJECT-TYPE
      SYNTAX   INTEGER {
            other (1),
            vehicle (2),
            pedestrian (3) }
      ACCESS   read-write
      STATUS   mandatory
      DESCRIPTION "<Definition> This object defines the type of control for
            the signal group (Vehicle Phase, Pedestrian Phase, Overlap or
            Pedestrian Overlap) to be used to determine the movement phase
            state to broadcast in a SPaT message:
      other: The signal group is not defined by the standard. Per NTCIP 8004
            v02, an attempt to write a value of 'other' shall return a
            badValue error. A user- or manufacturer-specific object is
            permitted to extend the possible states.
      vehicle: The signal group is is configured in the signalGroupEntryTable
            with a control type of phaseVehicle (3) or overlap (5) or
            queueJump (7).
```

 © 2023 AASHTO / ITE / NEMA

```
      pedestrian: The signal group is configured in the signalGroupEntryTable
            with a control type of phasePedestrian (4) or pedOverlap (6).
      <Object Identifier> 1.3.6.1.4.1.1206.4.2.1.16.12.1.3
      <Object Type> P"
::= { agencySignalStateEntry 3 }
```

#### 5.17.12.4 Additional Parameters for Determining Signal State

```
agencySignalStateOptions   OBJECT-TYPE
      SYNTAX   INTEGER (0..65535)
      ACCESS   read-write
      STATUS   mandatory
      DESCRIPTION "<Definition> Additional parameters for determining the
            movement phase state to broadcast in a SPaT message ( 0 =
            FALSE/Disabled, 1 = TRUE/Enabled )
      Bit 15: Reserved
      Bit 14: Reserved
      Bit 13: Reserved
      Bit 12: Reserved
      Bit 10: Reserved
      Bit 11: Reserved
      Bit 9: The signalGroupPermissiveControlSource /
            signalGroupPermissiveControlType indication is Flashing Red.
      Bit 8: The signalGroupPermissiveControlSource /
            signalGroupPermissiveControlType indication is Flashing Yellow.
      Bit 7: The signalGroupPermissiveControlSource /
            signalGroupPermissiveControlType indication is Green.
      Bit 6: The signalGroupPermissiveControlSource /
            signalGroupPermissiveControlType indication is Yellow.
      Bit 5: The signalGroupPermissiveControlSource /
            signalGroupPermissiveControlType indication is Red.
      Bit 4: Protected Green - If Bit 1 is TRUE, the signal group is
            configured in the signalGroupEntryTable with a
            signalGroupGreenType of protectedMovementAllowed (4) or
            protectedPermissive (5).
      Bit 3: Permissive Green - If Bit 1 is TRUE, the signal group is
            configured in the signalGroupEntryTable with a
            signalGroupGreenType of permissiveMovementAllowed (3) or
            protectedPermissive (5).
      Bit 2: preMovement Green - If Bit 1 is TRUE, the signal group is
            configured in the signalGroupEntryTable with a
            signalGroupGreenType is preMovement (2). Not used in the US.
      Bit 1: stopAndRemain - If Bit 1 is TRUE, the signal group is configured
            in the signalGroupEntryTable with a signalGroupRedType of
            stopAndRemain (3).
      Bit 0: stopThenProceed - If Bit 1 is TRUE, the signal group is
            configured in the signalGroupEntryTable with a signalGroupRedType
            of stopThenProceed (2).

      If both Bits 0 and 1 are FALSE, then the signalGroupRedType is not
            applicable. Bits 0 and 1 cannot be both TRUE. A SET of both bits
            0 and 1 to TRUE shall result return a badValue(3) error.

      If both Bits 3 and 4 are FALSE, then the signalGroupGreenType is not
            applicable. If only Bit 3 is TRUE, then the signalGroupGreenType
            for the the signal group in the signalGroupEntryTable is
            permissiveMovementAllowed (3). If only Bit 4 is TRUE, then the
```

© 2023 AASHTO / ITE / NEMA Copy Per MIB Distribution Permission

```
            signalGroupGreenType for the signal group in the
            signalGroupEntryTable is protectedMovementAllowed (4). If both
            Bits 3 and 4 are TRUE, that indicates the signalGroupGreenType is
            protectedPermissive and the signal indication of
            signalGroupPermissiveControlType and
            signalGroupPermissiveControlSource determines if the signal green
            type is permissiveMovementAllowed or protectedMovementAllowed.

      Bits 5-9 determine what signal indication(s) of the
            signalGroupPermissiveControlType /
            signalGroupPermissiveControlSource makes the movement permissive.
            If Bits 5-9 are all TRUE, then ANY signal indication of the
            signalGroupPermissiveControlType /
            signalGroupPermissiveControlSource determines if the movement is
            permissive. If Bits 5-9 are all FALSE, then the color of the
            signalGroupPermissiveControlType /
            signalGroupPermissiveControlSource is not applicable.
      See Annex F.3.3.5.2 and F.3.3.5.3 for additional guidance.
      <Object Identifier> 1.3.6.1.4.1.1206.4.2.1.16.12.1.4
      <Object Type> P"
::= { agencySignalStateEntry 4 }
```

#### 5.17.12.5 Signal State Indication

```
agencySignalStateValue  OBJECT-TYPE
      SYNTAX   INTEGER { other (1),
            unavailable (2),
            dark (3),
            stopThenProceed (4),
            stopAndRemain (5),
            preMovement (6),
            permissiveMovementAllowed (7),
            protectedMovementAllowed (8),
            permissiveClearance (9),
            protectedClearance (10),
            cautionConflictingTraffic (11) }
      ACCESS   read-write
      STATUS   mandatory
      DESCRIPTION "<Definition> This object indicates the movement phase
            state to be broadcasted in a SPaT message.
      other: The movement phase state is not defined by the standard.
      unavailable: The state of the movement is unknown or an error occurred.
      dark: The signal head is dark (unlit)
      stopThenProceed: Indicates the vehicle must stop at the stop line. It
            may proceed if it is safe.
      stopAndRemain: Indicates the vehicle must stop at the stop line. It may
            not proceed.
      preMovement: Prepare to proceed.
      permissiveMovementAllowed: Indicates a permissive green.
      protectedMovementAllowed: Indicates a protected green (a steady green
            arrow).
      permissiveClearance: Prepare to stop. Vehicle may proceed if unable to
            stop. Conflicting traffic may be present.
      protectedClearance: Prepare to stop. Vehicle may proceed if unable to
            stop.
      cautionConflictingTraffic: Proceed with caution. Conflicting traffic
            may be present.
```

 © 2023 AASHTO / ITE / NEMA

```
      <Object Identifier> 1.3.6.1.4.1.1206.4.2.1.16.12.1.5
      <Object Type> P"
      REFERENCE "SAE J2735 DE_MovementPhaseState"
      DEFVAL { unavailable }
::= { agencySignalStateEntry 5 }
```

#### 5.17.13 Maximum Enabled Lanes Concurrency Entries

```
maxEnabledLanesConcurrency   OBJECT-TYPE
      SYNTAX   INTEGER (1..254)
      ACCESS   read-only
      STATUS   mandatory
      DESCRIPTION "<Definition> This object indicates the maximum rows which
            shall appear in the spatEnabledLanesConcurrencyTable object.
      <Object Identifier> 1.3.6.1.4.1.1206.4.2.1.16.13
      <Object Type> S"
::= { ascSpat 13 }
```

#### 5.17.14 SPaT Enabled Lanes Command 2

```
spatEnabledLanesCommand2   OBJECT-TYPE
      SYNTAX INTEGER (0..255)
      ACCESS read-write
      STATUS mandatory
      DESCRIPTION "<Definition> This object establishes the Enabled lanes for
            the device to be broadcast in a SPaT message. The value is equal
            to the enabledLaneIndex in the spatEnabledLanesConcurrencyTable.
            Each octet within the octet string for enabledLaneConcurrency in
            that row contains the (revocable) lane number(s) that are
            enabled. The new set of Enabled lanes will be broadcast at the
            top of the next cycle.

            A value of 0 indicates that there are no enabled lanes. A value
            of 255 indicates that the device shall cancel this command and
            shall revert back to the Enabled lanes defined in the
            timebaseAscActionTable timebaseAscActionLane. Otherwise, the
            Enabled lanes defined is this command shall override the Enabled
            lanes defined in timebaseAscActionLane.

            If an unsupported / invalid set of Enabled lanes is called, then
            the spatPortStatus object shall be SET to enabledLanesError(5)
            for all valid entries in the spatPortTable.
      <Object Identifier> 1.3.6.1.4.1.1206.4.2.1.16.14
      <Object Type> P"
      REFERENCE "SAE J2735 DF_EnabledLaneList"
::= { ascSpat 14 }
```

### 5.18 RSU - ASC Support

```
rsuAsc OBJECT IDENTIFIER
::= { asc 17 }

-- This defines a node for objects to support a CV Roadside Process in a
connected vehicle environment.

MapActivationCode ::= OCTET STRING (SIZE(3))
```

© 2023 AASHTO / ITE / NEMA 

```
-- The MapActivationCode consists of those parameters required to activate a
-- MAP Plan message in an ASC. It is defined as an OCTET STRING containing
-- the OER-encoding of the following ASN.1 structure.

-- mapActivationCodeStructure ::= SEQUENCE {
-- mapPlanIndex INTEGER (1..8),
-- mapPlanCRC OCTET STRING (SIZE (2)) }
--
-- mapPlanIndex (8 bits) shall indicate the mapPlanIndex requested.
--
-- mapPlanCRC (16 bits) shall indicate the mapPlanCRC of the requested
-- mapPlanIndex.
```

### 5.18.1 RSU Signal Phase and Timing Functions

```
rsuAscSpat OBJECT IDENTIFIER ::= { rsuAsc 1 }

-- This defines a node for objects to support signalized intersection
-- applications in a CV Roadside Process in a connected vehicle environment.
```

#### 5.18.1.1 Maximum Number of ASCs Supported

```
maxRsuAscs   OBJECT-TYPE
      SYNTAX   INTEGER (1..32)
      ACCESS   read-only
      STATUS   deprecated
      DESCRIPTION "<Definition> This object contains the maximum number of
            signal controller entries this RSU supports. Each entry
            represents a signalized intersection whose signal phase and
            timing information is broadcast by the RSU. This object indicates
            the maximum rows which shall appear in the mapIntersectionTable
            object.
      <Object Identifier> 1.3.6.1.4.1.1206.4.2.1.17.1.1
      <Object Type> S
      <Unit> movement"
::= { rsuAscSpat 1 }
```

#### 5.18.1.2 SPaT ASC Table

```
rsuAscSpatTable   OBJECT-TYPE
      SYNTAX   SEQUENCE OF RsuAscSpatEntry
      ACCESS   not-accessible
      STATUS   deprecated
      DESCRIPTION "<Definition> This table contains information describing
            the signal phase and timing information for a signalized
            intersection broadcast by the RSU. The number of rows in this
            table is equal to the maxRsuAscs object.
      <TableType> static
      <Object Identifier> 1.3.6.1.4.1.1206.4.2.1.17.1.2"
::= { rsuAscSpat 2 }

rsuAscSpatEntry   OBJECT-TYPE
      SYNTAX   RsuAscSpatEntry
      ACCESS   not-accessible
      STATUS   deprecated
```

 © 2023 AASHTO / ITE / NEMA

```
      DESCRIPTION "<Definition> Signal phase and timing information for a
            signalized intersection broadcast in a SPaT message.
      <Object Identifier> 1.3.6.1.4.1.1206.4.2.1.17.1.2.1"
      INDEX  { rsuAscSpatIndex }
::= { rsuAscSpatTable 1 }

RsuAscSpatEntry::= SEQUENCE {
      rsuAscSpatIndex         INTEGER,
      rsuAscSpatId                  INTEGER,
      rsuAscSpatMsgCount            INTEGER,
      rsuAscSpatMinuteOfTheYear     INTEGER,
      rsuAscSpatMilliseconds        INTEGER,
      rsuAscSpatEnabledLanes        OCTET STRING }
```

#### 5.18.1.2.1 SPaT ASC Index

```
rsuAscSpatIndex   OBJECT-TYPE
      SYNTAX  INTEGER (1..32)
      ACCESS  read-only
      STATUS  deprecated
      DESCRIPTION "<Definition> The index number of the signalized
            intersection objects in this row. This value shall not exceed the
            maxRsuAscs object value.
      <Object Identifier> 1.3.6.1.4.1.1206.4.2.1.17.1.2.1.1
      <Unit> node"
::= { rsuAscSpatEntry 1 }
```

#### 5.18.1.2.2 SPaT ASC Intersection Identifier

```
rsuAscSpatId OBJECT-TYPE
      SYNTAX  INTEGER (0..65535)
      ACCESS  read-write
      STATUS  deprecated
      DESCRIPTION "<Definition> To support SAE J2735, the regionally unique
            identifier of the intersection.
      <Object Identifier> 1.3.6.1.4.1.1206.4.2.1.17.1.2.1.2"
      REFERENCE "SAE J2735 DE_IntersectionID"
::= { rsuAscSpatEntry 2 }
```

#### 5.18.1.2.3 SPaT ASC Message Count

```
rsuAscSpatMsgCount OBJECT-TYPE
      SYNTAX  INTEGER (0..127)
      ACCESS  read-only
      STATUS  deprecated
      DESCRIPTION "<Definition> To support SAE J2735, a sequence number that
            is incremented when the contents for the intersection in the SPaT
            data message has changed.
      <Object Identifier> 1.3.6.1.4.1.1206.4.2.1.17.1.2.1.3"
      REFERENCE "SAE J2735 DF_IntersectionState and DE_MsgCount"
::= { rsuAscSpatEntry 3 }
```

#### 5.18.1.2.4 SPaT ASC Message Time

```
rsuAscSpatMinuteOfTheYear   OBJECT-TYPE
      SYNTAX  INTEGER (0..527040)
```

© 2023 AASHTO / ITE / NEMA Copy Per MIB Distribution Permission

```
      ACCESS  read-only
      STATUS  deprecated
      DESCRIPTION "<Definition> To support SAE J2735, the minute of the
            current year SPaT data for this intersection in this row was last
            broadcast by the CV Roadside Process.
      <Object Identifier> 1.3.6.1.4.1.1206.4.2.1.17.1.2.1.4"
      REFERENCE "SAE J2735 DF_IntersectionState and DE_MinuteOfTheYear"
      DEFVAL { 0 }
::= { rsuAscSpatEntry 4 }
```

#### 5.18.1.2.5 SPaT ASC Message Time (Milliseconds)

```
rsuAscSpatMilliseconds   OBJECT-TYPE
      SYNTAX  INTEGER (0..65535)
      ACCESS  read-only
      STATUS  deprecated
      DESCRIPTION "<Definition> To support SAE J2735, the millisecond of the
            current minute (rsuAscSpatMinuteOfTheYear) SPaT data for this
            intersection in this row was generated.
      <Object Identifier> 1.3.6.1.4.1.1206.4.2.1.17.1.2.1.5"
      REFERENCE "SAE J2735 DF_IntersectionState and DE_DSecond"
      DEFVAL { 0 }
::= { rsuAscSpatEntry 5 }
```

#### 5.18.1.2.6 SPaT ASC Message Enabled Lanes

```
rsuAscSpatEnabledLanes   OBJECT-TYPE
      SYNTAX OCTET STRING
      ACCESS read-write
      STATUS deprecated
      DESCRIPTION "<Definition> To support SAE J2735, this object is used to
            indicate the Enabled lanes list generated by a specific signal
            controller and broadcast in a SPaT message. Each octet within the
            octet string contains the mapLaneIndex(s) (binary value) in the
            MAP plan data configuration that is broadcast to be ACTIVE. Lanes
            that may not always be ACTIVE (enabled) are identified as a
            RevocableLane (Bit 0) in mapLaneType. If a lane is to be
            identified as ACTIVE, the mapLaneIndex is added to this OCTET
            STRING.
      <Object Identifier> 1.3.6.1.4.1.1206.4.2.1.17.1.2.1.6"
      REFERENCE "SAE J2735 DF_EnabledLaneList"
      DEFVAL { "" }
::= { rsuAscSpatEntry 6 }
```

### 5.18.1.3 SPaT Message Time

```
rsuSpatMinuteOfTheYear   OBJECT-TYPE
      SYNTAX INTEGER (0..527040)
      ACCESS read-only
      STATUS deprecated
      DESCRIPTION "<Definition> To support SAE J2735, the minute of the
            current year a SPaT message was last broadcast by the CV Roadside
            Process.
      <Object Identifier> 1.3.6.1.4.1.1206.4.2.1.17.1.3"
      REFERENCE "SAE J2735 MSG_SignalPhaseAndTiming Message and
            DE_MinuteOfTheYear"
```

 © 2023 AASHTO / ITE / NEMA

```
      DEFVAL { 0 }
::= { rsuAscSpat 3 }
```

#### 5.18.1.4 Control Active MAP Plan

```
mapActivatePlan   OBJECT-TYPE
      SYNTAX   MapActivationCode
      ACCESS   read-write
      STATUS   mandatory
      DESCRIPTION "<Definition> A code indicating the active MAP plan. The
            value of this object may be SET by a management station. If a GET
            is performed on this object, the device shall respond with the
            value for the last MAP plan that was successfully activated.

            The mapActivatePlanError object shall be updated appropriately
            upon any attempt to update the value of this object. If a MAP
            plan activation error occurs (e.g., mapActivatePlanError is
            updated to a value other than 'none'), the new MAP plan shall not
            be activated and a genErr shall be returned. A management station
            should then GET the mapActivatePlanError object as soon as
            possible to minimize the chance of additional activation attempts
            from overwriting the mapActivatePlanError.

            A value of 00 00 00 indicates no MAP plan is active and thus no
            MAP data should be broadcast.
      <Object Identifier> 1.3.6.1.4.1.1206.4.2.1.17.1.4"
::= { rsuAscSpat 4 }
```

#### 5.18.1.5 Active MAP Plan Error

```
mapActivatePlanError   OBJECT-TYPE
      SYNTAX   INTEGER { other (1),
            none (2),
            mapPlanIndex (3),
            mapPlanCRC (4) }
      ACCESS   read-only
      STATUS   mandatory
      DESCRIPTION "<Definition> This is an error code used to identify why a
            commanded MAP plan was not not implemented.
      other: any error not defined by this standard.
      none: no error.
      mapPlanIndex: the MAP plan index requested is not supported or is not
            defined (populated) by the device.
      mapPlanCRC: the checksum in the mapActivatePlan is different than the
            CRC value contained in the 'mapPlanCRC'.
      <Object Identifier> 1.3.6.1.4.1.1206.4.2.1.17.1.5"
::= { rsuAscSpat 5 }
```

### 5.18.2 Connected Detection Zone

```
ascCvDetector OBJECT IDENTIFIER
::= { rsuAsc 2 }

-- This defines a node for a CV Roadside Process to support detection of
connected devices in a connected vehicle environment.
```

© 2023 AASHTO / ITE / NEMA 

#### 5.18.2.1 Connected Detection Zone Enable

```
cvDetectionEnable   OBJECT-TYPE
      SYNTAX   INTEGER { enabled (1),
            disabled (2) }
      ACCESS   read-write
      STATUS   deprecated
      DESCRIPTION "<Definition> This object is used to enable/disable
            detection zones in a connected vehicle environment. If enabled,
            the CU allows detectors defined in vehicleDetectorTable and
            pedestrianDetectorTable to use inputs from the connected vehicle
            environment. Inputs may be in the form of actuations, safety
            messages and/or detection reports in the detectionReportTable.
      <Object Identifier> 1.3.6.1.4.1.1206.4.2.1.17.2.1"
      DEFVAL      { disabled }
::= { ascCvDetector 1 }
```

#### 5.18.2.2 Maximum Connected Detection Zones

```
maxCvDetectionZones   OBJECT-TYPE
      SYNTAX INTEGER(1..255)
      ACCESS read-only
      STATUS mandatory
      DESCRIPTION "<Definition> The maximum number of connected vehicle
            detection zones this RSU supports. This object indicates the
            maximum rows which appear in the ascCvDetectorTable object.
      <Object Identifier> 1.3.6.1.4.1.1206.4.2.1.17.2.2"
::= { ascCvDetector 2 }
```

#### 5.18.2.3 Connected Detection Zone Table

```
ascCvDetectorTable OBJECT-TYPE
      SYNTAX SEQUENCE OF AscCvDetectorEntry
      ACCESS not-accessible
      STATUS mandatory
      DESCRIPTION "<Definition> A table containing the connected vehicle
            detection zone parameters for this RSU. The number of rows in
            this table is equal to the maxCvDetectionZones object.
      <TableType> static
      <Object Identifier> 1.3.6.1.4.1.1206.4.2.1.17.2.3"
::= { ascCvDetector 3 }

ascCvDetectorEntry OBJECT-TYPE
      SYNTAX AscCvDetectorEntry
      ACCESS not-accessible
      STATUS mandatory
      DESCRIPTION "<Definition> Parameters for a specific connected vehicle
            detection zone.
      <Object Identifier> 1.3.6.1.4.1.1206.4.2.1.17.2.3.1"
      INDEX { ascCvDetectorNumber }
::= { ascCvDetectorTable 1 }

AscCvDetectorEntry ::= SEQUENCE {
      ascCvDetectorNumber           INTEGER,
      ascCvDetectorOptions          INTEGER, --deprecated
      ascCvDetectorIntersection     INTEGER, --deprecated
      ascCvDetectorInput            OCTET STRING, --deprecated
```

 © 2023 AASHTO / ITE / NEMA

```
      ascCvDetectorAssignment       OCTET STRING, --deprecated
      ascCvDetectorSamplePeriod     INTEGER, --deprecated
      ascCvDetectorUserClass        INTEGER, --deprecated
      ascCvDetectorHeading          INTEGER, --deprecated
      ascCvDetectorMinSpeed         INTEGER, --deprecated
      ascCvDetectorMaxSpeed         INTEGER, --deprecated
      ascCvDetectorMinSize          INTEGER, --deprecated
      ascCvDetectorMaxSize          INTEGER, --deprecated
      ascCvDetectorFlags            INTEGER }--deprecated
```

#### 5.18.2.3.1 Connected Detection Zone Number

```
ascCvDetectorNumber OBJECT-TYPE
      SYNTAX INTEGER(1..255)
      ACCESS read-only
      STATUS mandatory
      DESCRIPTION "<Definition> The connected vehicle detection zone number
            for objects in this row. This value shall not exceed the
            maxCvDetectionZones object value.
      <Object Identifier> 1.3.6.1.4.1.1206.4.2.1.17.2.3.1.1"
::= { ascCvDetectorEntry 1 }
```

#### 5.18.2.3.2 Connected Detection Zone Options Parameter

```
ascCvDetectorOptions OBJECT-TYPE
      SYNTAX INTEGER (0..255)
      ACCESS read-write
      STATUS deprecated
      DESCRIPTION "<Definition> Connected Detection Zone Options Parameter as
            follows (0=Disabled, 1=Enabled):
            Bit 7: Reserved
            Bit 6: Enable processed data  - enables the exchange of
                  detectionReports across the ASC - RSU interface.
            Bit 5: Enable actuation.      - enables the
                  ascCvDetectionActuations object for this detection zone.
            Bits 3 & 4: Indicates which detector table the detector number in
                  ascCvDetectorAssignment is assigned to.
                  Bit 3 = 0, Bit 4 = 0    - unknown or not applicable
                  Bit 3 = 1, Bit 4 = 0    - vehicleDetectorTable
                  Bit 3 = 0, Bit 4 = 1    - pedestrianDetectorTable
                  Bit 4 = 1, Bit 4 = 1    - Reserved
            Bit 2: Input Type             - A value of 0 indicates the
                  detection zone boundaries are defined by mapLaneIndex (that
                  is, the detection zone boundaries are equal to the
                  boundaries of the lane indexed). A value of 1 indicates the
                  detection zone boundaries are defined by
                  detectionZoneNodePointIndex.
            Bit 1: A bit value of 1 enables the processing of Personal Safety
                  messages (PSMs) detected within the detection zone.
            Bit 0: A bit value of 1 enables the processing of Basic Safety
                  Messages (BSMs) detected within the detection zone.
      <Object Identifier> 1.3.6.1.4.1.1206.4.2.1.17.2.3.1.2"
::= { ascCvDetectorEntry 2 }
```

© 2023 AASHTO / ITE / NEMA 

#### 5.18.2.3.3 Connected Detection Intersection

```
ascCvDetectorIntersection OBJECT-TYPE
      SYNTAX INTEGER (0..65535)
      ACCESS read-write
      STATUS deprecated
      DESCRIPTION "<Definition> An object referencing the intersection that
            this connected vehicle detection zone is associated with. This
            reference is used to establish which controller unit the
            actuations are intended for and the reference point for the
            geometric boundaries of the detection zone (ascCvDetectorInput). 0
            indicates no intersection has been associated with this CV
            detection zone.
      <Object Identifier> 1.3.6.1.4.1.1206.4.2.1.17.2.3.1.3"
      DEFVAL { 0 }
::= { ascCvDetectorEntry 3 }
```

#### 5.18.2.3.4 Connected Detection Zone Input

```
ascCvDetectorInput OBJECT-TYPE
      SYNTAX OCTET STRING
      ACCESS read-write
      STATUS deprecated
      DESCRIPTION "<Definition> A null octet string indicates there is no
            geographic boundary, so any safety message received that
            satisfies the other criteria defined in the row is valid,
            regardless of its geographic location.
            If Bit 2 of ascCvDetectorOptions is equal to 0, then each octet
            within the octet string represents a mapLaneIndex that defines
            the geographic boundaries of the detection zone for this
            connected device detector. If Bit 2 of ascCvDetectorOptions is
            equal to 1, then the octet represents the
            detectionZoneNodePointIndex that defines the geometric boundaries
            for this connected vehicle detector.
            The maximum size of this octet string is equal to the greater of
            maxLanes or maxDetectionZoneNodePoints.
      <Object Identifier> 1.3.6.1.4.1.1206.4.2.1.17.2.3.1.4"
      DEFVAL { "" }
::= { ascCvDetectorEntry 4 }
```

#### 5.18.2.3.5 Connected Detection Zone Assignment Parameter

```
ascCvDetectorAssignment OBJECT-TYPE
      SYNTAX OCTET STRING
      ACCESS read-write
      STATUS deprecated
      DESCRIPTION "<Definition> Each octet in this octet string represents a
            detector number in the appropriate detector table (as defined in
            Bits 3 and 4 in ascCvDetectorOptions) of the reference
            intersection (ascCvDetectorIntersection) that this connected
            vehicle detector is assigned to. Any Basic Safety Messages or
            Personal Safety Messages that satisfy all the criteria defined in
            the row will result in an actuation for this detector or can be
            used as an input for this detector. A null value indicates this
            detection zone is not assigned to any detector number.
      <Object Identifier> 1.3.6.1.4.1.1206.4.2.1.17.2.3.1.5"
      DEFVAL { "" }
```

Copy Per MIB Distribution Permission © 2023 AASHTO / ITE / NEMA

```
::= { ascCvDetectorEntry 5 }
```

#### 5.18.2.3.6 Connected Detection Zone Sampling Period Parameter

```
ascCvDetectorSamplePeriod OBJECT-TYPE
      SYNTAX INTEGER (0..255)
      ACCESS read-write
      STATUS deprecated
      DESCRIPTION "<Definition> This object defines the frequency (in
            seconds) that a detection report for this connected vehicle
            detection zone is generated and exchanged. This object is enabled
            if the collection of processed data is enabled
            (ascCvDetectionOptions, Bit 7 = 1).
      <Object Identifier> 1.3.6.1.4.1.1206.4.2.1.17.2.3.1.6
      <Unit>seconds"
      DEFVAL { 0 }
::= { ascCvDetectorEntry 6 }
```

#### 5.18.2.3.7 Connected Detection Zone User Class Parameter

```
ascCvDetectorUserClass OBJECT-TYPE
      SYNTAX INTEGER (0..255)
      ACCESS read-write
      STATUS deprecated
      DESCRIPTION "<Definition> The mapUserClassId value to which this
            connected vehicle detection zone applies to. Only connected
            devices that satisfy all of the vehicle types defined may result
            in an actuation for this detector. A value of 0 indicates that
            any vehicle type may result in an actuation.
      <Object Identifier> 1.3.6.1.4.1.1206.4.2.1.17.2.3.1.7"
::= { ascCvDetectorEntry 7 }
```

#### 5.18.2.3.8 Connected Detection Zone Heading Parameter

```
ascCvDetectorHeading OBJECT-TYPE
      SYNTAX INTEGER (0..65535)
      ACCESS read-write
      STATUS deprecated
      DESCRIPTION "<Definition> To support SAE J2735, this object represents
            heading slices that this connected vehicle detection zone applies
            to. Only connected devices that have a current heading within one
            of the enabled heading slices may result in an actuation for this
            detector. A value of 1 indicates that the heading slice is
            enabled.
      <Object Identifier> 1.3.6.1.4.1.1206.4.2.1.17.2.3.1.8"
      REFERENCE "SAE J2735 DE_HeadingSlice"
      DEFVAL { 0 }
::= { ascCvDetectorEntry 8 }
```

#### 5.18.2.3.9 Connected Detection Zone Minimum Speed Parameter

```
ascCvDetectorMinSpeed OBJECT-TYPE
      SYNTAX INTEGER (0..8191)
      ACCESS read-write
      STATUS deprecated
```

© 2023 AASHTO / ITE / NEMA Copy Per MIB Distribution Permission

```
      DESCRIPTION "<Definition> This object represents the minimum speed, in
            0.02 meters per second units, that this connected vehicle
            detection zone applies to. A value of 0 indicates that the
            connected vehicle detection zone applies to connected devices of
            any speed. A value of 8190 indicates the detector zone applies
            only to speeds equal to or greater than 40.90 meters per second.
      <Object Identifier> 1.3.6.1.4.1.1206.4.2.1.17.2.3.1.9"
      DEFVAL { 0 }
::= { ascCvDetectorEntry 9 }
```

#### 5.18.2.3.10 Connected Detection Zone Maximum Speed Parameter

```
ascCvDetectorMaxSpeed OBJECT-TYPE
      SYNTAX INTEGER (0..8191)
      ACCESS read-write
      STATUS deprecated
      DESCRIPTION "<Definition> This object represents the maximum speed, in
            0.02 meters per second units, that this connected vehicle
            detection zone applies to. A value of 0 is reserved. A value of
            8190 indicates that the connected vehicle detection zone applies
            to connected devices that are equal to or less than 40.90 meters
            per second. A value of 8191 indicates that this object is not
            used and that the connected vehicle detection zone applies to
            connected devices of any speed.
      <Object Identifier> 1.3.6.1.4.1.1206.4.2.1.17.2.3.1.10
      <Unit> 0.02 meters per second"
      DEFVAL { 8191 }
::= { ascCvDetectorEntry 10 }
```

#### 5.18.2.3.11 Connected Detection Zone Minimum Vehicle Size Parameter

```
ascCvDetectorMinSize OBJECT-TYPE
      SYNTAX INTEGER (0..4194303)
      ACCESS read-write
      STATUS deprecated
      DESCRIPTION "<Definition> This object represents the minimum vehicle
            size, in centimeters, that this connected vehicle detection zone
            applies to. Bits 0 to 9 represents the minimum width of the
            vehicle, and Bits 10 to 21 represents the minimum length of the
            vehicle. A value of 0 indicates that the connected vehicle
            detection zone applies to connected devices of any size. This
            object is valid only for BSMs.
      <Object Identifier> 1.3.6.1.4.1.1206.4.2.1.17.2.3.1.11"
      DEFVAL { 0 }
::= { ascCvDetectorEntry 11 }
```

#### 5.18.2.3.12 Connected Detection Zone Maximum Vehicle Size Parameter

```
ascCvDetectorMaxSize OBJECT-TYPE
      SYNTAX INTEGER (0..4194303)
      ACCESS read-write
      STATUS deprecated
      DESCRIPTION "<Definition> This object represents the maximum vehicle
            size, in centimeters, that this connected vehicle detection zone
            applies to. Bits 0 to 9 represents the maximum width of the
            vehicle, and Bits 10 to 21 represents the maximum length of the
```

 © 2023 AASHTO / ITE / NEMA

```
            vehicle. A value of 0 is reserved. A value of 4194303 indicates
            that this object is not used and that the connected vehicle
            detection zone applies to connected devices of any s.ize.
      <Object Identifier> 1.3.6.1.4.1.1206.4.2.1.17.2.3.1.12
      <Unit> 0.02 meters per second"
      DEFVAL { 4194303 }
::= { ascCvDetectorEntry 12 }
```

#### 5.18.2.3.13 Connected Detection Zone Flags Parameter

```
ascCvDetectorFlags OBJECT-TYPE
      SYNTAX INTEGER(0..255)
      ACCESS read-write
      STATUS deprecated
      DESCRIPTION "<Definition> To support SAE J2735, this object represents
            a filter for the event flags and brake status of a connected
            vehicle that this connected vehicle detection zone applies to. If
            a value is set to true (set to 1), this indicates that only basic
            safety messages whose event flag status is also true will result
            in an actuation, will be exchanged, or will be stored (as
            appropriate) for that connected device detection zone. If
            multiple values are set to true, then any basic safety messages
            that satisfy ANY ONE of those values will result in an actuation,
            exchanged, or stored (i.e., this is an OR object).
            Bit 15:     braking active
            Bit 14:     brake boost assist engaged
            Bit 13:     auxiliary brake engaged
            Bit 12:     Air bags deployed
            Bit 11:     Vehicle disabled
            Bit 10:     Flat tire
            Bit 9:      Status of wiper (front or back) changed within last
            the 2 seconds
            Bit 8:      Status of the exterior lights changed within the last
            2 seconds
            Bit 7:      Hard braking (greater than 0.4 g)
            Bit 6:      Reserved
            Bit 5:      Carrying hazardous materials and placarded as such
            Bit 4:      Stability control active and exceeding 100 mSec
            Bit 3:      Traction control active and exceeding 100 mSec
            Bit 2:      Anti Lock Brakes active and exceeding 100 mSec
            Bit 1:      Stop line violation
            Bit 0:      Hazard lights are active
      <Object Identifier> 1.3.6.1.4.1.1206.4.2.1.17.2.3.1.13"
      REFERENCE "SAE J2735 DF_BrakeSystemStatus DE_VehicleEventFlags"
      DEFVAL { 0 }
::= { ascCvDetectorEntry 13 }
```

### 5.18.2.4 Maximum Connected Detection Zone Node Points

```
maxDetectionZoneNodePoints   OBJECT-TYPE
      SYNTAX INTEGER(2..255)
      ACCESS read-only
      STATUS deprecated
      DESCRIPTION "<Definition> The maximum number of connected vehicle
            detection zone node points this CU supports. This object
            indicates the maximum rows which appear in the
            detectionZoneNodePointTable object.
```

© 2023 AASHTO / ITE / NEMA 

```
      <Object Identifier> 1.3.6.1.4.1.1206.4.2.1.17.2.4"
      DEFVAL      { 63 }
::= { ascCvDetector 4 }
```

#### 5.18.2.5 Connected Detection Zone Table

```
detectionZoneNodePointTable OBJECT-TYPE
      SYNTAX SEQUENCE OF DetectionZoneNodePointEntry
      ACCESS not-accessible
      STATUS deprecated
      DESCRIPTION "<Definition> A table containing the node points for a
            connected vehicle detection zone parameters in this RSU. The
            number of rows in this table is equal to the
            maxDetectionZoneNodePoints object.
      <TableType> static
      <Object Identifier> 1.3.6.1.4.1.1206.4.2.1.17.2.5"
::= { ascCvDetector 5 }

detectionZoneNodePointEntry OBJECT-TYPE
      SYNTAX DetectionZoneNodePointEntry
      ACCESS not-accessible
      STATUS deprecated
      DESCRIPTION "<Definition> Location of node points for a specific
            connected vehicle detection zone.
      <Object Identifier> 1.3.6.1.4.1.1206.4.2.1.17.2.5.1"
      INDEX { detectionZoneNodePointIndex }
::= { detectionZoneNodePointTable 1 }

DetectionZoneNodePointEntry ::= SEQUENCE {
      detectionZoneNodePointIndex   INTEGER,--deprecated
      detectionZoneNodePointX       INTEGER,--deprecated
      detectionZoneNodePointY       INTEGER,--deprecated
      detectionZoneNodePointWidth   INTEGER,--deprecated
      detectionZoneNodePointZ       INTEGER,--deprecated
      detectionZoneNodePointHeight  INTEGER }--deprecated
```

##### 5.18.2.5.1 Connected Detection Zone Node Point Index

```
detectionZoneNodePointIndex OBJECT-TYPE
      SYNTAX INTEGER(1..255)
      ACCESS read-only
      STATUS deprecated
      DESCRIPTION "<Definition> An index for the detection zone node points
            for objects in this row. This value shall not exceed the
            maxDetectionZoneNodePoints object value.
      <Object Identifier> 1.3.6.1.4.1.1206.4.2.1.17.2.5.1.1"
::= { detectionZoneNodePointEntry 1 }
```

##### 5.18.2.5.2 Detection Zone Node Point X

```
detectionZoneNodePointX   OBJECT-TYPE
      SYNTAX INTEGER (-32767..32767)
      ACCESS read-write
      STATUS deprecated
      DESCRIPTION "<Definition> Represents the X offset, in centimeters, from
            the previous node point (defined in the previous row of this
```

 © 2023 AASHTO / ITE / NEMA

```
            table, with the first path node defined in the row
            detectionZoneNodePointIndex = 1). For row
            detectionZoneNodePointIndex = 1, the offset is from the reference
            point of the referenced intersection (ascCvDetectorIntersection).
            The sequence of nodes defines the centerline of the detection
            zone. A positive value is to the East.
      <Object Identifier> 1.3.6.1.4.1.1206.4.2.1.17.2.5.1.2
      <Unit> centimeter"
::= { detectionZoneNodePointEntry 2 }
```

#### 5.18.2.5.3 Detection Zone Node Point Y

```
detectionZoneNodePointY   OBJECT-TYPE
      SYNTAX INTEGER (-32767..32767)
      ACCESS read-write
      STATUS deprecated
      DESCRIPTION "<Definition> Represents the Y offset, in centimeters, from
            the previous node point (defined in the previous row of this
            table, with the first node point defined in the row
            detectionZoneNodePointIndex = 1). For detectionZoneNodePointIndex
            = 1, the offset is from the reference point of the referenced
            intersection (ascCvDetectorIntersection). The sequence of node
            points defines the centerline of the zone. A positive value is to
            the North.
      <Object Identifier> 1.3.6.1.4.1.1206.4.2.1.17.2.5.1.3
      <Unit> centimeter"
::= { detectionZoneNodePointEntry 3 }
```

#### 5.18.2.5.4 Detection Zone Node Point Width

```
detectionZoneNodePointWidth   OBJECT-TYPE
      SYNTAX INTEGER (-32767..32767)
      ACCESS read-write
      STATUS deprecated
      DESCRIPTION "<Definition> A value added to the current zone width at
            this node and from this node onwards, in 1 centimeter steps. Lane
            widths between nodes are a linear taper between points.
      <Object Identifier> 1.3.6.1.4.1.1206.4.2.1.17.2.5.1.4
      <Unit> centimeter"
::= { detectionZoneNodePointEntry 4 }
```

#### 5.18.2.5.5 Detection Zone Node Point Z

```
detectionZoneNodePointZ   OBJECT-TYPE
      SYNTAX INTEGER (-32767..32767)
      ACCESS read-write
      STATUS deprecated
      DESCRIPTION "<Definition> Represents the Z offset, in centimeters, from
            the previous node point (defined in the previous row of this
            table, with the first node point defined in the row
            detectionZoneNodePointIndex = 1). For detectionZoneNodePointIndex
            = 1, the offset is from the reference point of the referenced
            intersection (ascCvDetectorIntersection). The sequence of node
            points defines the elevation of the roadway pavement that the
            zone is on top of. A positive value represents a higher
            elevation.
```

© 2023 AASHTO / ITE / NEMA 

```
      <Object Identifier> 1.3.6.1.4.1.1206.4.2.1.17.2.5.1.5
      <Unit> centimeter"
::= { detectionZoneNodePointEntry 5 }
```

#### 5.18.2.5.6 Detection Zone Node Point Height

```
detectionZoneNodePointHeight   OBJECT-TYPE
      SYNTAX INTEGER (0..32767)
      ACCESS read-write
      STATUS deprecated
      DESCRIPTION "<Definition> The height, in centimeters, above the roadway
            pavement for the detection zone. This value is added to the
            detectionZoneNodePointZ to represent the upper boundary of the
            detection zone. The detection zone height between node points are
            a linear taper between points.
      <Object Identifier> 1.3.6.1.4.1.1206.4.2.1.17.2.5.1.6
      <Unit> centimeter"
::= { detectionZoneNodePointEntry 6 }
```

### 5.18.2.6 Detection Actuations Sample Period

```
cvDetectionActuationSamplePeriod   OBJECT-TYPE
      SYNTAX INTEGER (0..65535)
      ACCESS read-write
      STATUS deprecated
      DESCRIPTION "The sample period for updating the cvDetectionActuations
            object, in units of milliseconds. If the value is zero (0), then
            the cvDetectionActuations is not collected on a periodic basis.
      <Object Identifier> 1.3.6.1.4.1.1206.4.2.1.17.2.6
      <Unit> millisecond"
      DEFVAL { 0 }
::= { ascCvDetector 6 }
```

### 5.18.2.7 Maximum Connected Detection Zone Groups

```
maxCvDetectionGroups   OBJECT-TYPE
      SYNTAX INTEGER (1..32)
      ACCESS read-only
      STATUS mandatory
      DESCRIPTION "<Definition> The maximum number of connected vehicle
            detection zone groups (8 connected detection zones per group)
            this RSU supports. This value is equal to TRUNCATE
            [(maxCvDetectionZones + 7) / 8]. This object indicates the
            maximum rows which shall appear in the cvDetectionGroupTable.
      <Object Identifier> 1.3.6.1.4.1.1206.4.2.1.17.2.7
      <Object Type> S
      <Unit> centimeter"
::= { ascCvDetector 7 }
```

### 5.18.2.8 Detection Group Table

```
cvDetectionGroupTable   OBJECT-TYPE
      SYNTAX SEQUENCE OF CvDetectionGroupEntry
      ACCESS not-accessible
      STATUS mandatory
```

 © 2023 AASHTO / ITE / NEMA

```
      DESCRIPTION "<Definition> A table containing status information in
            groups of eight connected vehicle detection zones
            (ascCvDetectorNumber). The number of rows in this table is equal
            to the maxCvDetectionGroups object.
      <Object Identifier> 1.3.6.1.4.1.1206.4.2.1.17.2.8"
::= { ascCvDetector 8 }

cvDetectionGroupEntry OBJECT-TYPE
      SYNTAX CvDetectionGroupEntry
      ACCESS not-accessible
      STATUS mandatory
      DESCRIPTION "<Definition> The status for eight connected vehicle device
            detectors.
      <Object Identifier> 1.3.6.1.4.1.1206.4.2.1.17.2.8.1"
      INDEX { cvDetectionGroupNumber }
::= { cvDetectionGroupTable 1 }

CvDetectionGroupEntry  ::= SEQUENCE {
      cvDetectionGroupNumber  INTEGER,
      cvDetectionGroupActuations    INTEGER }
```

#### 5.18.2.8.1 CV Detection Group Number

```
cvDetectionGroupNumber OBJECT-TYPE
      SYNTAX INTEGER (1..32)
      ACCESS read-only
      STATUS mandatory
      DESCRIPTION "<Definition> The CV Detection Group number for objects in
            this row. This value shall not exceed the maxCvDetectionGroups
            object value.
      <Object Identifier> 1.3.6.1.4.1.1206.4.2.1.17.2.8.1.1
      <Object Type> S
      <Unit> group"
::= { cvDetectionGroupEntry 1 }
```

#### 5.18.2.8.2 CV Detection Group Actuations

```
cvDetectionGroupActuations OBJECT-TYPE
      SYNTAX INTEGER (0..255)
      ACCESS read-only
      STATUS mandatory
      DESCRIPTION "<Definition> CV Detection Actuation Mask, where when a bit
            = 1, the CV Detection is currently actuated. When a bit = 0, the
            CV Detection is NOT currently actuated.
      Bit 7: CV Detection # = (cvDetectionGroupNumber * 8)
      Bit 6: CV Detection # = (cvDetectionGroupNumber * 8) - 1
      Bit 5: CV Detection # = (cvDetectionGroupNumber * 8) - 2
      Bit 4: CV Detection # = (cvDetectionGroupNumber * 8) - 3
      Bit 3: CV Detection # = (cvDetectionGroupNumber * 8) - 4
      Bit 2: CV Detection # = (cvDetectionGroupNumber * 8) - 5
      Bit 1: CV Detection # = (cvDetectionGroupNumber * 8) - 6
      Bit 0: CV Detection # = (cvDetectionGroupNumber * 8) - 7
      <Object Identifier> 1.3.6.1.4.1.1206.4.2.1.17.2.8.1.2
      <Object Type> S
      <Unit> group"
::= { cvDetectionGroupEntry 2 }
```

© 2023 AASHTO / ITE / NEMA Copy Per MIB Distribution Permission

#### 5.18.2.9 CV Detection Report Collection

```
detectionReportCollection   OBJECT-TYPE
      SYNTAX   INTEGER (0..255)
      ACCESS   read-write
      STATUS   deprecated
      DESCRIPTION "<Definition> This object determines what pieces of data
            will be exchanged and stored for the detectionReportTable. A
            value set to 1 indicates that piece of data shall be stored.
            Bit 6 & 7 = Reserved
            Bit 5 = platoon         - detectionReportPlatoon
            Bit 4 = gap             - detectionReportGap
            Bit 3 = queue length    - detectionReportQueue
            Bit 2 = travel time     - detectionReportTravelTime
            Bit 1 = average speed   - detectionReportSpeed
            Bit 0 = volume          - detectionReportVolume
      <Object Identifier> 1.3.6.1.4.1.1206.4.2.1.17.2.9"
::= { ascCvDetector 9 }
```

#### 5.18.2.10 Active CV Detectors

```
activeCvDetectors   OBJECT-TYPE
      SYNTAX INTEGER (0..255)
      ACCESS read-only
      STATUS mandatory
      DESCRIPTION "<Definition> The number of active CV detectors in this
            device. This object indicates how many rows are in the
            detectionReportTable object. There shall be a row for every
            active CV detector collecting CV data.
      <Object Identifier> 1.3.6.1.4.1.1206.4.2.1.17.2.10
      <Object Type> S"
::= { ascCvDetector 10 }
```

#### 5.18.2.11 Detection Reports Sequence

```
detectionReportSequence   OBJECT-TYPE
      SYNTAX   INTEGER(0..65535)
      ACCESS   read-only
      STATUS   mandatory
      DESCRIPTION "<Definition> This object defines a sequence number for
            detection reports received from defined connected vehicle
            detection zones. This object is used to track where a new
            detection report received by the CU should be stored. The value
            cycles within the limits of 0 to 65535 and is incremented by one
            when a detection report is stored in the detectionReportTable.
      <Object Identifier> 1.3.6.1.4.1.1206.4.2.1.17.2.11
      <Object Type> S
      <Unit> sequence"
::= { ascCvDetector 11 }
```

#### 5.18.2.12 Connected Detection Reports Table

```
detectionReportTable OBJECT-TYPE
      SYNTAX SEQUENCE OF DetectionReportEntry
      ACCESS not-accessible
      STATUS mandatory
```

 © 2023 AASHTO / ITE / NEMA

```
      DESCRIPTION "<Definition> A table containing detector reports for a
            connected vehicle detection zone defined for this CU. The number
            of rows in this table is equal to the activeCvDetectors object.
            Note: The objects in this table are read-write to allow the RSU
            to be the SNMP manager and the ASC to be the SNMP agent across
            the RSU - ASC interface.
      <TableType> static
      <Object Identifier> 1.3.6.1.4.1.1206.4.2.1.17.2.12"
::= { ascCvDetector 12 }

detectionReportEntry OBJECT-TYPE
      SYNTAX DetectionReportEntry
      ACCESS not-accessible
      STATUS mandatory
      DESCRIPTION "<Definition> Detection reports received for a specific
            connected vehicle detection zone.
      <Object Identifier> 1.3.6.1.4.1.1206.4.2.1.17.2.12.1"
      INDEX { ascCvDetectorNumber }
::= { detectionReportTable 1 }

DetectionReportEntry ::= SEQUENCE {
      detectionReportTime           INTEGER,
      detectionReportVolume         INTEGER,
      detectionReportSpeed          INTEGER,
      detectionReportTravelTime     INTEGER,
      detectionReportQueue          INTEGER,
      detectionReportGap            INTEGER,
      detectionReportPlatoon        INTEGER }
```

#### 5.18.2.12.1 Connected Detection Zone Report Time

```
detectionReportTime OBJECT-TYPE
      SYNTAX   INTEGER (0..3601000)
      ACCESS   read-write
      STATUS   mandatory
      DESCRIPTION "<Definition> This object indicates the seconds within the
            hour the detector report is generated.
      <Valid Value Rule> 0 to 3600999 are in milliseconds, with a leap second
            represented by 3600000 to 3600999. A value of 3601000 shall
            represent unavailable.
      <Object Identifier> 1.3.6.1.4.1.1206.4.2.1.17.2.12.1.1
      <Object Type> P
      <Unit> millisecond"
      DEFVAL      { 3601000 }
::= { detectionReportEntry 1 }
```

#### 5.18.2.12.2 Connected Detection Zone Volume Data

```
detectionReportVolume OBJECT-TYPE
      SYNTAX INTEGER (0..255)
      ACCESS read-write
      STATUS mandatory
      DESCRIPTION "<Definition> A count of the number of connected devices
            currently detected in the connected vehicle detection zone at the
            time the report was generated. This value shall range from 0 to
            254. The value 255 shall indicate volume overflow.
      <Object Identifier> 1.3.6.1.4.1.1206.4.2.1.17.2.12.1.2
```

© 2023 AASHTO / ITE / NEMA Copy Per MIB Distribution Permission

```
      <Object Type> P
      <Unit> volume"
      DEFVAL { 0 }
::= { detectionReportEntry 2 }
```

#### 5.18.2.12.3 Connected Detection Zone Speed Data

```
detectionReportSpeed OBJECT-TYPE
      SYNTAX INTEGER (0..255)
      ACCESS read-write
      STATUS mandatory
      DESCRIPTION "<Definition> The average speed, in 0.5 kilometers per
            hour, of the connected devices currently detected in the
            connected vehicle detection zone at the time the report was
            generated.
      <Valid Value Rule> A value of 0 to 253 is the average connected device
            speed in 0.5 kilometers per hour units. A value of 254 represents
            an average speed of 127 kilometers per hour or higher. A value of
            255 represents an invalid or missing value.
      <Object Identifier> 1.3.6.1.4.1.1206.4.2.1.17.2.12.1.3
      <Object Type> P
      <Unit> 0.5 kilometers/hour"
      DEFVAL      { 255 }
::= { detectionReportEntry 3 }
```

#### 5.18.2.12.4 Connected Detection Zone Travel Time Data

```
detectionReportTravelTime OBJECT-TYPE
      SYNTAX INTEGER (0..65535)
      ACCESS read-write
      STATUS mandatory
      DESCRIPTION "<Definition> The average travel time, in tenths of a
            second, for a connected device to traverse the connected vehicle
            detection zone at the time the report was generated. A value of
            65535 represents an invalid or missing value.
      <Object Identifier> 1.3.6.1.4.1.1206.4.2.1.17.2.12.1.4
      <Object Type> P
      <Unit> tenth second"
      DEFVAL { 65535 }
::= { detectionReportEntry 4 }
```

#### 5.18.2.12.5 Connected Detection Zone Queue Data

```
detectionReportQueue OBJECT-TYPE
      SYNTAX INTEGER (0..255)
      ACCESS read-write
      STATUS mandatory
      DESCRIPTION "<Definition> A count of the number of connected vehicles
            currently queued in the connected vehicle detection zone at the
            time the report was generated.
      <ValidValueRule> A value of 0 to 253 represents the number of vehicles
            queued. A value of 254 indicates the queue is 254 or more
            vehicles. A value of 255 represents an invalid or missing value.
      <Object Identifier> 1.3.6.1.4.1.1206.4.2.1.17.2.12.1.5
      <Object Type> P"
      DEFVAL { 255 }
```

 © 2023 AASHTO / ITE / NEMA

```
::= { detectionReportEntry 5 }
```

#### 5.18.2.12.6 Connected Detection Zone Gap Data

```
detectionReportGap OBJECT-TYPE
      SYNTAX INTEGER (0..65535)
      ACCESS read-write
      STATUS mandatory
      DESCRIPTION "<Definition> The average gap, in centimeters, between the
            connected vehicles currently detected in the connected vehicle
            detection zone at the time the report was generated. The gap is
            defined as the distance between the edge of the rear bumper of a
            connected vehicle and the edge of the front bumper of a connected
            vehicle behind it. A value of 65535 indicates an invalid or
            missing value.
      <Object Identifier> 1.3.6.1.4.1.1206.4.2.1.17.2.12.1.6
      <Object Type> P
      <Unit> centimeter"
      DEFVAL { 65535 }
::= { detectionReportEntry 6 }
```

#### 5.18.2.12.7 Connected Detection Zone Platoon Data

```
detectionReportPlatoon OBJECT-TYPE
      SYNTAX INTEGER (0..255)
      ACCESS read-write
      STATUS mandatory
      DESCRIPTION "<Definition> A count of the number of connected vehicles
            in a platoon currently detected in the connected vehicle
            detection zone at the time the report was generated.
      <ValidValueRule> A value of 0 to 253 represents the number of vehicles
            in the platoon. A value of 254 indicates the platoon is 254 or
            more vehicles. A value of 255 represents an invalid or missing
            value.
      <Object Identifier> 1.3.6.1.4.1.1206.4.2.1.17.2.12.1.7
      <Object Type> P
      <Unit> vehicle"
      DEFVAL { 255 }
::= { detectionReportEntry 7 }

END
```

© 2023 AASHTO / ITE / NEMA Copy Per MIB Distribution Permission

# Section 6
# Block Object Definitions

BLOCK OBJECT DEFINITIONS

## 6.1 Block Data Type and ID

All ASC Block Objects shall begin with two octets that define the Data Type and Data ID.

The Data Type octet (ascBlockDataType) provides for the definition of both NTCIP Standard and Device Proprietary data blocks. NTCIP Standard Data Blocks shall utilize an 'ascBlockDataType' of zero. Device Proprietary Data Blocks shall utilize an 'ascBlockDataType' equal to the Private Node Number (PNN) as assigned by NEMA (1.3.6.1.4.1.1206.3.PNN).

| dataType | Description |
|---|---|
| 0x00 | Standard Data Block |
| 0XPNN | Device Proprietary Data Block |

The Data ID octet (ascBlockDataID) provides for definition of included data parameters. NTCIP Standard Data Blocks shall include an 'ascBlockDataID' as listed below:

| **ascBlockData-dataID Definitions** | | |
|---|---|---|
| **dataID** | **Name** | **Description** |
| 0x00 | AscPhaseBlock | Phase Data (see 6.2) |
| 0x01 | AscVehDetectorBlock | Vehicle Detector Data (see 6.3) |
| 0x02 | AscPedDetectorBlock | Pedestrian Detector Data (see 6.4) |
| 0x03 | AscPatternBlock | Pattern Data (see 6.5) |
| 0x04 | AscSplitBlock | Split Data (see 6.6) |
| 0x05 | AscTimebaseBlock | Time Base Data (see 6.7) |
| 0x06 | AscPreemptBlock | Preempt Data (see 6.8) |
| 0x07 | AscSequenceBlock | Sequence Data (see 6.9) |
| 0x08 | AscChannelBlock | Channel Data (see 6.10) |
| 0x09 | AscOverlapBlock | Overlap Data (see 6.11) |
| 0x0A | AscPort1Block | Port 1 Data (see 6.12) |
| 0x0B | AscScheduleBlock | Schedule Data (see 6.13) |
| 0x0C | AscDayPlanBlock | Day Plan Data (see 6.14) |
| 0x0D | AscEventConfigBlock | Event Config Data (see 6.15) |
| 0x0E | AscEventClassBlock | Event Class Data (see 6.16) |
| 0x0F | AscDynObjConfigBlock (*) | Dynamic Object Config Data (see 6.17) |
| 0x10 | AscDynObjOwnerBlock (*) | Dynamic Object Owner Data (see 6.18) |
| 0x11 | AscDynObjStatusBlock (*) | Dynamic Object Status Data (see 6.19) |
| 0x12 | AscMiscBlock | Miscellaneous ASC Data (see 6.20) |
| 0x13 | AscPhase2Block | Phase 2 Data (see 6.21) |
| 0x14 | AscVehDetector2Block | Vehicle Detector 2 Data (See 6.22) |

Copy Per MIB Distribution Permission © 2023 AASHTO / ITE / NEMA

| ascBlockData-dataID Definitions | | |
|---|---|---|
| **dataID** | **Name** | **Description** |
| 0x15 | AscVehDetVolOccV3Block | Vehicle Detector Volume/Occupancy Report v3 Data (See 6.23) |
| 0x16 | AscPedDetector2Block | Pedestrian Detector 2 Data (See 6.24) - DEPRECATED |
| 0x17 | AscPedDetectorReportBlock | Pedestrian Detector Report Data (See 6.25) |
| 0x18 | AscPedButtonMiscConfigBlock | Pedestrian Button Miscellaneous Config Data (See 6.26) |
| 0x19 | AscPattern2Block | Pattern 2 Data (See 6.27) - DEPRECATED |
| 0x1A | AscSplit2Block | Split 2 Data (See 6.28) |
| 0x1B | AscPreempt2Block | Preempt 2 Data (See 6.29) |
| 0x1C | AscPreemptQueueDelayBlock | Preempt Queue Delay Data (See 6.30) |
| 0x1D | AscChannel2Block | Channel 2 Data (See 6.31) - DEPRECATED |
| 0x1E | AscOverlap2Block | Overlap 2 Data (See 6.32) |
| 0x1F | AscCommPortDefBlock | Communications Port Definition Data (See 6.33) |
| 0x20 | AscEthernetCommPortDefBlock | Ethernet Communications Port Definition Data (See 6.34) |
| 0x21 | AscSiuPort1Block | SIU Port 1 Data (See 6.35) |
| 0x22 | AscMisc2Block | Miscellaneous ASC 2 Data (See 6.36) |
| 0x23 | AscUserDefinedBackupTimerBlock | User-Defined Backup Time Data (See 6.37) |
| 0x24 | AscLocationBlock | ASC Location Data (See 6.38) |
| 0x25 | AscGlobalSetIDBlock | Global Set ID Data (See 6.39) |
| 0x26 | AscEnvironMonitorBlock | ASC Environmental Monitoring Data (See 6.40) |
| 0x27 | AscCabinetTemperatureSensorBlock | ASC Cabinet Temperature Sensor Data (See 6.41) |
| 0x28 | AscCabinetHumiditySensorBlock | ASC Cabinet Humidity Sensor Data (See 6.42) |
| 0x29 | AscIOinputMapBlock | ASC I/O Input Mapping Data (See 6.43) |
| 0x2A | AscIOinputStatusBlock | ASC I/O Input Status Data (See 6.44) - DEPRECATED |
| 0x2B | AscIOoutputMapBlock | ASC I/O Output Mapping Data (See 6.45) |
| 0x2C | AscIOoutputStatusBlock | ASC I/O Output Status Data (See 6.46) - DEPRECATED |
| 0x2D | AscIOMapDescriptionBlock | ASC I/O Mapping Description Data (See 6.47) |
| 0x2E | AscCvConfigBlock | Connected Vehicles Configuration Data (See 6.48) - DEPRECATED |
| 0x2F | AscCvRsuPortConfigBlock | Connected Vehicle RSU Ports Configuration Data (See 6.49) |

© 2023 AASHTO / ITE / NEMA

| ascBlockData-dataID Definitions | | |
|---|---|---|
| **dataID** | **Name** | **Description** |
| 0x30 | AscCvSpatLanesConcurrencyConfigBlock | Connected Vehicle SPaT-Enabled Lanes Concurrency Configuration Data (See 6.50) |
| 0x31 | AscCvSpatRsuConfigBlock | Connected Vehicle SPaT RSU Port Configuration Data (See 6.51) |
| 0x32 | AscCvDetectorConfigBlock | Connected Vehicle Detector Configuration Data (See 6.52) - DEPRECATED |
| 0x33 | AscCvDetectionZoneConfigBlock | Connected Vehicle Detection Zone Configuration Data (See 6.53) - DEPRECATED |
| 0x34 | AscCvDetectionReportBlock | Connected Vehicle Detection Report Data (See 6.54) |
| 0x35 | AscCvConfig2Block | Connected Vehicles Configuration 2 Data (See 6.55) |
| 0x36 | AscPattern3Block | Pattern 3 Data (See 6.55) |
| 0x37 - 0xFF | | Reserved For NTCIP ASC Usage |
| **(*) Any attempt to GET or SET this data via STMP shall result in a genError** | | |

New versions of this standard shall NOT change the structure (content or definition) for any dataID block. New dataID blocks may be added for ascBlockData for expansion to cover other parameters. When a dataID block needs to be revised, the standard writers shall deprecate ascBlockData and establish a new OID (i.e., ascBlockData1) for all the current dataID blocks.

Proprietary Device Blocks shall include an 'ascBlockDataID' as defined in their separate documentation

### 6.2 Phase Block Data

```
-- ascBlockData values for standard Block
-- Phase Data shall be as follows:

AscPhaseBlock ::= SEQUENCE
      {
      ascBlockDataType  INTEGER (0..255),  -- 0x00 standard block
      ascBlockDataID    INTEGER (0..255),  -- 0x00 phase data
      ascBlockIndex1    INTEGER (0..255),  -- phaseNumber
      ascBlockQuantity1 INTEGER (0..255),  -- ## of phases

      -- for {
      --      x = ascBlockIndex1;
      --      x < (ascBlockIndex1 + ascBlockQuantity1);
      --      x++)

      data    SEQUENCE OF AscPhaseBlockData
      }

AscPhaseBlockData ::= SEQUENCE
      {
      phaseWalk.x             INTEGER (0..255),
      phasePedestrianClear.x  INTEGER (0..255),
```

 © 2023 AASHTO / ITE / NEMA

```
      phaseMinimumGreen.x     INTEGER (0..255),
      phasePassage.x          INTEGER (0..255),
      phaseMaximum1.x         INTEGER (0..255),
      phaseMaximum2.x         INTEGER (0..255),
      phaseYellowChange.x     INTEGER (0..255),
      phaseRedClear.x         INTEGER (0..255),
      phaseRedRevert.x        INTEGER (0..255),
      phaseAddedInitial.x     INTEGER (0..255),
      phaseMaximumInitial.x   INTEGER (0..255),
      phaseTimeBeforeReduction.x    INTEGER (0..255),
      phaseCarsBeforeReduction.x    INTEGER (0..255),
      phaseTimeToReduce.x     INTEGER (0..255),
      phaseReduceBy.x         INTEGER (0..255),
      phaseMinimumGap.x       INTEGER (0..255),
      phaseDynamicMaxLimit.x  INTEGER (0..255),
      phaseDynamicMaxStep.x   INTEGER (0..255),
      phaseStartup.x          INTEGER (1..6),
      phaseOptions.x          INTEGER (0..65535),
      phaseRing.x             INTEGER (0..255),
      phaseConcurrency.x      OCTET STRING
      }
```

### 6.2.1 Phase Block Example

```
-- The following provides an example octet string value for
-- a set or get of a phase block.
--
--    SEQUENCE
-- 00       ascBlockDataType (standard block)
-- 00       ascBlockDataID (phase data)
-- 02       ascBlockIndex1 (start with phaseNumber=2)
-- 02       ascBlockQuantity1 (## of phases=2)

--    SEQUENCE OF
-- 01 02    quantity of items (ascBlockQuantity1)
--    SEQUENCE # 1 (phaseNumber=2)
-- 06       phaseWalk.2      (6 sec)
-- 0C       phasePedestrianClear.2 (12 sec)
--  |       etc, etc, to:
-- 01       phaseRing.2      (ring 1)
-- 02 05 06 phaseConcurrency.2     (ph 5 & 6)
--    SEQUENCE # 2 (phaseNumber=3)
-- 00       phaseWalk.3      (0 sec)
-- 00       phasePedestrianClear.3 (0 sec)
--  |       etc, etc, to:
-- 01       phaseRing.3      (ring 1)
-- 02 07 08 phaseConcurrency.3     (ph 7 & 8)
```

## 6.3 Vehicle Detector Block Data

```
-- ascBlockData values for standard Block
-- Vehicle Detector Data shall be as follows:

AscVehDetectorBlock ::= SEQUENCE
      {
      ascBlockDataType  INTEGER (0..255),  -- 0x00 standard block
      ascBlockDataID    INTEGER (0..255),  -- 0x01 veh detector data
```

© 2023 AASHTO / ITE / NEMA 

```
      ascBlockIndex1    INTEGER (0..255),  -- vehicleDetectorNumber
      ascBlockQuantity1 INTEGER (0..255),  -- ## of veh detectors

      -- for (
      --      x = ascBlockIndex1;
      --      x < (ascBlockIndex1 + ascBlockQuantity1);
      --      x++)

      data    SEQUENCE OF AscVehDetectorBlockData
      }

AscVehDetectorBlockData ::= SEQUENCE
      {
      vehicleDetectorOptions.x      INTEGER (0..255),
      vehicleDetectorCallPhase.x    INTEGER (0..255),
      vehicleDetectorSwitchPhase.x  INTEGER (0..255),
      vehicleDetectorDelay.x        INTEGER (0..65535),
      vehicleDetectorExtend.x       INTEGER (0..255),
      vehicleDetectorQueueLimit.x   INTEGER (0..255),
      vehicleDetectorNoActivity.x   INTEGER (0..255),
      vehicleDetectorMaxPresence.x  INTEGER (0..255),
      vehicleDetectorErraticCounts.x      INTEGER (0..255),
      vehicleDetectorFailTime.x     INTEGER (0..255)
      }
```

### 6.3.1 Vehicle Detector Block Example

```
-- The following provides an example octet string value for
-- a set or get of a vehicle detector block.
--
--    SEQUENCE
-- 00       ascBlockDataType (standard block)
-- 01       ascBlockDataID (veh detector data)
-- 02       ascBlockIndex1 (start with vehicleDetectorNumber=2)
-- 02       ascBlockQuantity1 (## of veh det=2)

--    SEQUENCE OF
-- 01 02    quantity of items (ascBlockQuantity1)
--    SEQUENCE # 1 (vehicleDetectorNumber =2)
-- B4       vehicleDetectorOptions.2 (bits)
-- 02       vehicleDetectorCallPhase.2     (ph 2)
--  |       etc, etc, to:
-- 00       vehicleDetectorErraticCounts.2 (0 cpm)
-- FF       vehicleDetectorFailTime.2      (255 sec)
--    SEQUENCE # 2 (vehicleDetectorNumber =3)
-- B4       vehicleDetectorOptions.3 (bits)
-- 03       vehicleDetectorCallPhase.3     (ph 3)
--  |       etc, etc, to:
-- 00       vehicleDetectorErraticCounts.3 (0 cpm)
-- FF       vehicleDetectorFailTime.3      (255 sec)
```

## 6.4 Pedestrian Detector Block Data

```
-- ascBlockData values for standard Block
-- Pedestrian Detector Data shall be as follows:

AscPedDetectorBlock ::= SEQUENCE
```

 © 2023 AASHTO / ITE / NEMA

```
      {
      ascBlockDataType  INTEGER (0..255),  -- 0x00 standard block
      ascBlockDataID    INTEGER (0..255),  -- 0x02 ped detector data
      ascBlockIndex1    INTEGER (0..255),  -- pedestrianDetectorNumber
      ascBlockQuantity1 INTEGER (0..255),  -- ## of ped detectors

      -- for (
      --      x = ascBlockIndex1;
      --      x < (ascBlockIndex1 + ascBlockQuantity1);
      --      x++)

      data    SEQUENCE OF AscPedDetectorBlockData
      }

AscPedDetectorBlockData ::= SEQUENCE
      {
      pedestrianDetectorCallPhase.x       INTEGER (0..255),
      pedestrianDetectorNoActivity.x      INTEGER (0..255),
      pedestrianDetectorMaxPresence.x     INTEGER (0..255),
      pedestrianDetectorErraticCounts.x   INTEGER (0..255)
      }
```

### 6.4.1 Pedestrian Detector Block Example

```
-- The following provides an example octet string value for
-- a set or get of a pedestrian detector block.
--
--    SEQUENCE
-- 00       ascBlockDataType (standard block)
-- 02       ascBlockDataID (ped detector data)
-- 02       ascBlockIndex1 (start with pedestrianDetectorNumber=2)
-- 02       ascBlockQuantity1 (## of ped det=2)
--    SEQUENCE OF
-- 01 02    quantity of items (ascBlockQuantity1)
--    SEQUENCE # 1 (pedestrianDetectorNumber =2)
-- 02       pedestrianDetectorCallPhase.2     (ph 2)
-- 00       pedestrianDetectorNoActivity.2    (0 min)
-- 00       pedestrianDetectorMaxPresence.2   (0 min)
-- 00       pedestrianDetectorErraticCounts.2 (0 cpm)
--    SEQUENCE # 2 (pedestrianDetectorNumber =3)
-- 03       pedestrianDetectorCallPhase.3     (ph 3)
-- 00       pedestrianDetectorNoActivity.3    (0 min)
-- 00       pedestrianDetectorMaxPresence.3   (0 min)
-- 00       pedestrianDetectorErraticCounts.3 (0 cpm)
```

## 6.5 Pattern Block Data

```
-- ascBlockData values for standard Block
-- Pattern Data shall be as follows:

AscPatternBlock ::= SEQUENCE
      {
       ascBlockDataType     INTEGER (0..255),  -- 0x00 standard block
       ascBlockDataID INTEGER (0..255),  -- 0x03 pattern data
       ascBlockIndex1 INTEGER (0..255),  -- patternNumber
       ascBlockQuantity1    INTEGER (0..255),  -- ## of patterns
```

© 2023 AASHTO / ITE / NEMA 

```
       -- for (
       --      x = ascBlockIndex1;
       --      x < (ascBlockIndex1 + ascBlockQuantity1);
       --      x++)

       data    SEQUENCE OF AscPatternBlockData
      }

AscPatternBlockData ::= SEQUENCE
      {
       patternCycleTime.x  INTEGER (0..255),
       patternOffsetTime.x INTEGER (0..255),
       patternSequenceNumber.x   INTEGER (0..255)
      }
```

### 6.5.1 Pattern Block Example

```
-- The following provides an example octet string value for
-- a set or get of a pattern block.
--
--    SEQUENCE
-- 00       ascBlockDataType (standard block)
-- 03       ascBlockDataID (pattern data)
-- 02       ascBlockIndex1 (start with patternNumber=2)
-- 02       ascBlockQuantity1 (## of patterns=2)
--    SEQUENCE OF
-- 01 02    quantity of items (ascBlockQuantity1)
--    SEQUENCE # 1 (patternNumber =2)
-- 50       patternCycleTime.2      (80 sec)
-- 00       patternOffsetTime.2     (0 sec)
-- 01       patternSequenceNumber.2 (seq 1)
--    SEQUENCE # 2 (patternNumber =3)
-- 64       patternCycleTime.3      (100 sec)
-- 05       patternOffsetTime.3     (5 sec)
-- 01       patternSequenceNumber.3 (seq 1)
```

## 6.6 Split Block Data

```
-- ascBlockData values for standard Block
-- Split Data shall be as follows:

AscSplitBlock ::= SEQUENCE
      {
       ascBlockDataType       INTEGER (0..255),  -- 0x00 standard block
       ascBlockDataID         INTEGER (0..255),  -- 0x04 split data
       ascBlockIndex1         INTEGER (0..255),  -- splitPhase
       ascBlockQuantity1      INTEGER (0..255),  -- ## of phases
       ascBlockIndex2         INTEGER (0..255),  -- splitNumber
       ascBlockQuantity2      INTEGER (0..255),  -- ## of splits

       -- for (
       --      y = ascBlockIndex2;
       --      y < (ascBlockIndex2 + ascBlockQuantity2);
       --      y++)
       --      for (
       --     x = ascBlockIndex1;
       --     x < (ascBlockIndex1 + ascBlockQuantity1);
```

 © 2023 AASHTO / ITE / NEMA

```
       --     x++)

       data    SEQUENCE OF AscSplitBlockData
      }

AscSplitBlockData ::= SEQUENCE
      {
       splitTime.y.x   INTEGER (0..255),
       splitMode.y.x   INTEGER (1..7),
       splitCoordPhase.y.x   INTEGER (0..1)
      }
```

### 6.6.1 Split Block Example

```
-- The following provides an example octet string value for
-- a set or get of a split block.
--
--    SEQUENCE
-- 00       ascBlockDataType (standard block)
-- 04       ascBlockDataID (split data)
-- 01       ascBlockIndex1 (start with splitPhase=1)
-- 02       ascBlockQuantity1 (## of phases=2)
-- 01       ascBlockIndex2 (start with splitNumber=1)
-- 02       ascBlockQuantity2 (## of splits=2)
--    SEQUENCE OF
-- 01 04    quantity of items (ascBlockQuantity1 * ascBlockQuantity2)
--    SEQUENCE # 1 (splitNumber=1 / splitPhase=1)
-- 14       splitTime.1.1 (20 sec)
-- 02       splitMode.1.1 (none)
-- 00       splitCoordPhase.1.1 (false)
--    SEQUENCE # 2 (splitNumber=1 / splitPhase=2)
-- 14       splitTime.1.2 (20 sec)
-- 02       splitMode.1.2 (none)
-- 01       splitCoordPhase.1.2 (true)
--    SEQUENCE # 3 (splitNumber=2 / splitPhase=1)
-- 19       splitTime.2.1 (25 sec)
-- 02       splitMode.2.1 (none)
-- 00       splitCoordPhase.2.1 (false)
--    SEQUENCE # 4 (splitNumber=2 / splitPhase=2)
-- 19       splitTime.2.2 (25 sec)
-- 02       splitMode.2.2 (none)
-- 01       splitCoordPhase.2.2 (true)
```

## 6.7 Time Base Block Data

```
-- ascBlockData values for standard Block
-- Time Base Data shall be as follows:

AscTimebaseBlock ::= SEQUENCE
      {
       ascBlockDataType       INTEGER (0..255),  -- 0x00 standard block
       ascBlockDataID         INTEGER (0..255),  -- 0x05 time base data
       ascBlockIndex1         INTEGER (0..255),  -- timebaseAscActionNumber
       ascBlockQuantity1      INTEGER (0..255),  -- ## of actions

       -- for (
       --      x = ascBlockIndex1;
```

© 2023 AASHTO / ITE / NEMA 

```
       --      x < (ascBlockIndex1 + ascBlockQuantity1);
       --      x++)

       data    SEQUENCE OF AscTimebaseBlockData
      }

AscTimebaseBlockData ::= SEQUENCE
      {
       timebaseAscPattern.x               INTEGER (0..255),
       timebaseAscAuxillaryFunction.x     INTEGER (0..255),
       timebaseAscSpecialFunction.x       INTEGER (0..255)
      }
```

### 6.7.1 Time Base Block Example

```
-- The following provides an example octet string value for
-- a set or get of a time base block.
--
--    SEQUENCE
-- 00       ascBlockDataType (standard block)
-- 05       ascBlockDataID (time base data)
-- 02       ascBlockIndex1 (start with timebaseAscActionNumber =2)
-- 02       ascBlockQuantity1 (## of actions =2)
--    SEQUENCE OF
-- 01 02    quantity of items (ascBlockQuantity1)
--    SEQUENCE # 1 (timebaseAscActionNumber =2)
-- 02       timebaseAscPattern.2     (pat 2)
-- 00       timebaseAscAuxillaryFunction.2 (bits)
-- 00       timebaseAscSpecialFunction.2   (bits)
--    SEQUENCE # 2 (timebaseAscActionNumber =3)
-- 03       timebaseAscPattern.3     (pat 3)
-- 00       timebaseAscAuxillaryFunction.3 (bits)
-- 00       timebaseAscSpecialFunction.3   (bits)
```

### 6.8 Preempt Block Data

```
-- ascBlockData values for standard Block
-- Preempt Data shall be as follows:

AscPreemptBlock ::= SEQUENCE
      {
       ascBlockDataType       INTEGER (0..255),  -- 0x00 standard block
       ascBlockDataID         INTEGER (0..255),  -- 0x06 preempt data
       ascBlockIndex1         INTEGER (0..255),  -- preemptNumber
       ascBlockQuantity1      INTEGER (0..255),  -- ## of preempts

       -- for (
       --      x = ascBlockIndex1;
       --      x < (ascBlockIndex1 + ascBlockQuantity1);
       --      x++)

       data    SEQUENCE OF AscPreemptBlockData
      }

AscPreemptBlockData ::= SEQUENCE
      {
       preemptControl.x             INTEGER (0..255),
```

 © 2023 AASHTO / ITE / NEMA

```
        preemptLink.x                INTEGER (0..255),
        preemptDelay.x               INTEGER (0..65535),
        preemptMinimumDuration.x     INTEGER (0..65535),
        preemptMinimumGreen.x        INTEGER (0..255),
        preemptMinimumWalk.x         INTEGER (0..255),
        preemptEnterPedClear.x       INTEGER (0..255),
        preemptTrackGreen.x          INTEGER (0..255),
        preemptDwellGreen.x          INTEGER (0..255),
        preemptMaximumPresence.x     INTEGER (0..65535),
        preemptTrackPhase.x          OCTET STRING,
        preemptDwellPhase.x          OCTET STRING,
        preemptDwellPed.x            OCTET STRING,
        preemptExitPhase.x           OCTET STRING,
        preemptTrackOverlap.x        OCTET STRING,
        preemptDwellOverlap.x        OCTET STRING,
        preemptCyclingPhase.x        OCTET STRING,
        preemptCyclingPed.x          OCTET STRING,
        preemptCyclingOverlap.x      OCTET STRING,
        preemptEnterYellowChange     INTEGER (0..255),
        preemptEnterRedClear         INTEGER (0..255),
        preemptTrackYellowChange     INTEGER (0..255),
        preemptTrackRedClear         INTEGER (0..255)
       }
```

### 6.8.1 Preempt Block Example

```
-- The following provides an example octet string value for
-- a set or get of a preempt block.
--
--    SEQUENCE
-- 00       ascBlockDataType (standard block)
-- 06       ascBlockDataID (preempt data)
-- 02       ascBlockIndex1 (start with preemptNumber =2)
-- 02       ascBlockQuantity1 (## of preempts=2)

--    SEQUENCE OF
-- 01 02    quantity of items (ascBlockQuantity1)
--    SEQUENCE # 1 (preemptNumber =2)
-- 05       preemptControl.2  (bits)
-- 00       preemptLink.2     (none)
--  |       etc, etc, to:
-- 28       preemptTrackYellowChange.2 (4.0 Sec)
-- 00       preemptTrackRedClear.2     (  0 Sec)
--    SEQUENCE # 2 (preemptNumber =3)
-- 05       preemptControl.3  (bits)
-- 01       preemptLink.3     (pe 1)
--  |       etc, etc, to:
-- 28       preemptTrackYellowChange.3 (4.0 Sec)
-- 00       preemptTrackRedClear.3     (  0 Sec)
```

## 6.9 Sequence Block Data

```
-- ascBlockData values for standard Block
-- Sequence Data shall be as follows:

AscSequenceBlock ::= SEQUENCE
      {
```

© 2023 AASHTO / ITE / NEMA 

```
       ascBlockDataType       INTEGER (0..255),  -- 0x00 standard block
       ascBlockDataID         INTEGER (0..255),  -- 0x07 sequence data
       ascBlockIndex1         INTEGER (0..255),  -- sequenceRingNumber
       ascBlockQuantity1      INTEGER (0..255),  -- ## of rings
       ascBlockIndex2         INTEGER (0..255),  -- sequenceNumber
       ascBlockQuantity2      INTEGER (0..255),  -- ## of sequences

       -- for (
       --      y = ascBlockIndex2;
       --      y < (ascBlockIndex2 + ascBlockQuantity2);
       --      y++)
       --      for (
       --     x = ascBlockIndex1;
       --     x < (ascBlockIndex1 + ascBlockQuantity1);
       --     x++)

       data    SEQUENCE OF AscSequenceBlockData
      }

AscSequenceBlockData ::= SEQUENCE
      {
       sequenceData.y.x       OCTET STRING
      }
```

### 6.9.1 Sequence Block Example

```
-- The following provides an example octet string value for
-- a set or get of a sequence block.
--
--    SEQUENCE
-- 00       ascBlockDataType (standard block)
-- 07       ascBlockDataID (sequence data)
-- 01       ascBlockIndex1 (start with sequenceRingNumber=1)
-- 02       ascBlockQuantity1 (## of rings=2)
-- 01       ascBlockIndex2 (start with sequenceNumber=1)
-- 02       ascBlockQuantity2 (## of sequences =2)
--    SEQUENCE OF
-- 01 04    quantity of items (ascBlockQuantity1 * ascBlockQuantity2)
--    SEQUENCE # 1 (sequenceNumber=1 / sequenceRingNumber=1)
-- 04 01 02 03 04       sequenceData.1.1 (ph 1-2-3-4)
--    SEQUENCE # 2 (sequenceNumber=1 / sequenceRingNumber=2)
-- 04 05 06 07 08       sequenceData.1.2 (ph 5-6-7-8)
--    SEQUENCE # 3 (sequenceNumber=2 / sequenceRingNumber=1)
-- 04 02 01 04 03       sequenceData.2.1 (ph 1-2-3-4)
--    SEQUENCE # 4 (sequenceNumber=2 / sequenceRingNumber=2)
-- 04 06 05 08 07       sequenceData.2.2 (ph 5-6-7-8)
```

## 6.10 Channel Block Data

```
-- ascBlockData values for standard Block
-- Channel Data shall be as follows:

AscChannelBlock ::= SEQUENCE
      {
       ascBlockDataType       INTEGER (0..255),  -- 0x00 standard block
       ascBlockDataID         INTEGER (0..255),  -- 0x08 channel data
       ascBlockIndex1         INTEGER (0..255),  -- channelNumber
```

 © 2023 AASHTO / ITE / NEMA

```
       ascBlockQuantity1      INTEGER (0..255),  -- ## of channels

       -- for (
       --      x = ascBlockIndex1;
       --      x < (ascBlockIndex1 + ascBlockQuantity1);
       --      x++)

       data    SEQUENCE OF AscChannelBlockData
      }

AscChannelBlockData ::= SEQUENCE
      {
       channelControlSource.x INTEGER (0..255),
       channelControlType.x   INTEGER (1..4),
       channelFlash.x         INTEGER (0..255),
       channelDim.x           INTEGER (0..255)
      }
```

### 6.10.1 Channel Block Example

```
-- The following provides an example octet string value for
-- a SET or GET of a channel block.
--
--    SEQUENCE
-- 00       ascBlockDataType (standard block)
-- 08       ascBlockDataID (channel data)
-- 02       ascBlockIndex1 (start with channelNumber=2)
-- 02       ascBlockQuantity1 (## of channels=2)
--    SEQUENCE OF
-- 01 02    quantity of items (ascBlockQuantity1)
--    SEQUENCE # 1 (channelNumber=2)
-- 02       channelControlSource.2 (ph 2)
-- 02       channelControlType.2   (phaseVehicle)
-- 02       channelFlash.2   (bits)
-- 07       channelDim.2     (bits)
--    SEQUENCE # 2 (channelNumber=3)
-- 03       channelControlSource.3 (ph 3)
-- 02       channelControlType.3   (phaseVehicle)
-- 04       channelFlash.3   (bits)
-- 0F       channelDim.3     (bits)
```

### 6.11 Overlap Block Data

```
-- ascBlockData values for standard Block
-- Overlap Data shall be as follows:

AscOverlapBlock ::= SEQUENCE
      {
       ascBlockDataType       INTEGER (0..255),  -- 0x00 standard block
       ascBlockDataID         INTEGER (0..255),  -- 0x09 overlap data
       ascBlockIndex1         INTEGER (0..255),  -- overlapNumber
       ascBlockQuantity1      INTEGER (0..255),  -- ## of overlaps

       -- for (
       --      x = ascBlockIndex1;
       --      x < (ascBlockIndex1 + ascBlockQuantity1);
       --      x++)
```

© 2023 AASHTO / ITE / NEMA 

```
       data    SEQUENCE OF AscOverlapBlockData
      }

AscOverlapBlockData ::= SEQUENCE
      {
       overlapIncludedPhases.x      OCTET STRING,
       overlapModifierPhases.x      OCTET STRING,
       overlapTrailGreen.x          INTEGER (0..255),
       overlapTrailYellow.x         INTEGER (0..255),
       overlapTrailRed.x            INTEGER (0..255)
      }
```

### 6.11.1 Overlap Block Example

```
-- The following provides an example octet string value for
-- a SET or GET of a overlap block.
--
--    SEQUENCE
-- 00       ascBlockDataType (standard block)
-- 09       ascBlockDataID (overlap data)
-- 02       ascBlockIndex1 (start with overlapNumber=2)
-- 02       ascBlockQuantity1 (## of overlaps=2)
--    SEQUENCE OF
-- 01 02    quantity of items (ascBlockQuantity1)
--    SEQUENCE # 1 (overlapNumber=2)
-- 02 02 03 overlapIncludedPhases.2 (ph 2 & 3)
-- 00       overlapModifierPhases.2 (none)
-- 00       overlapTrailGreen.2     (0 sec)
-- 23       overlapTrailYellow.2    (3.5 sec)
-- 05       overlapTrailRed.2 (0.5 sec)
--    SEQUENCE # 2 (overlapNumber=3)
-- 02 04 05 overlapIncludedPhases.3 (ph 4 & 5)
-- 00       overlapModifierPhases.3 (none)
-- 00       overlapTrailGreen.3     (0 sec)
-- 23       overlapTrailYellow.3    (3.5 sec)
-- 05       overlapTrailRed.3 (0.5 sec)
```

## 6.12 Port 1 Block Data

```
-- ascBlockData values for standard Block
-- Port 1 Data shall be as follows:

AscPort1Block ::= SEQUENCE
      {
       ascBlockDataType     INTEGER (0..255),  -- 0x00 standard block
       ascBlockDataID INTEGER (0..255),  -- 0x0A port 1 data
       ascBlockIndex1 INTEGER (0..255),  -- port1Number
       ascBlockQuantity1    INTEGER (0..255),  -- ## of address

       -- for (
       --      x = ascBlockIndex1;
       --      x < (ascBlockIndex1 + ascBlockQuantity1);
       --      x++)

       data    SEQUENCE OF AscPort1BlockData
      }
```

 © 2023 AASHTO / ITE / NEMA

```
AscPort1BlockData ::= SEQUENCE
      {
       port1DevicePresent.x   INTEGER (0..1),
       port1Frame40Enable.x   INTEGER (0..1)
      }
```

### 6.12.1 Port 1 Block Example

```
-- The following provides an example octet string value for
-- a SET or GET of a port 1 block.
--
--    SEQUENCE
-- 00       ascBlockDataType (standard block)
-- 0A       ascBlockDataID (port 1 data)
-- 02       ascBlockIndex1 (start with port1Number=2)
-- 02       ascBlockQuantity1 (## of address=2)
--    SEQUENCE OF
-- 01 02    quantity of items (ascBlockQuantity1)
--    SEQUENCE # 1 (port1Number=2)
-- 01       port1DevicePresent.2 (true)
-- 00       port1Frame40Enable.2 (false)
--    SEQUENCE # 2 (port1Number=3)
-- 01       port1DevicePresent.3 (true)
-- 00       port1Frame40Enable.3 (false)
```

## 6.13 Schedule Block Data

```
-- ascBlockData values for standard Block
-- Schedule Data shall be as follows:

AscScheduleBlock ::= SEQUENCE
      {
       ascBlockDataType       INTEGER (0..255),  -- 0x00 standard block
       ascBlockDataID         INTEGER (0..255),  -- 0x0B schedule data
       ascBlockIndex1         INTEGER (0..255),  -- timeBaseScheduleNumber
       ascBlockQuantity1      INTEGER (0..255),  -- ## of schedules

       -- for (
       --      x = ascBlockIndex1;
       --      x < (ascBlockIndex1 + ascBlockQuantity1);
       --      x++)

       data    SEQUENCE OF AscScheduleBlockData
      }

AscScheduleBlockData ::= SEQUENCE
      {
       timeBaseScheduleMonth.x      INTEGER (0..65535),
       timeBaseScheduleDay.x        INTEGER (0..255),
       timeBaseScheduleDate.x       INTEGER (0..4294967295),
       timeBaseScheduleDayPlan.x    INTEGER (1..255)
      }
```

© 2023 AASHTO / ITE / NEMA 

### 6.13.1 Schedule Block Example

```
-- The following provides an example octet string value for
-- a set or get of a schedule block.
--
--    SEQUENCE
-- 00             ascBlockDataType (standard block)
-- 0B             ascBlockDataID (schedule data)
-- 02             ascBlockIndex1 (start with timeBaseScheduleNumber=2)
-- 02             ascBlockQuantity1 (## of schedules=2)
--    SEQUENCE OF
-- 01 02          quantity of items (ascBlockQuantity1)
--    SEQUENCE # 1 (timeBaseScheduleNumber=2)
-- 1F FE          timeBaseScheduleMonth.2   (all)
-- 04             timeBaseScheduleDay.2     (Mon)
-- FF FF FF FE    timeBaseScheduleDate.2    (all)
-- 02             timeBaseScheduleDayPlan.2 (dp 2)
--    SEQUENCE # 2 (timeBaseScheduleNumber=3)
-- 1F FE          timeBaseScheduleMonth.3   (all)
-- 08             timeBaseScheduleDay.3     (Tue)
-- FF FF FF FE timeBaseScheduleDate.3    (all)
-- 03             timeBaseScheduleDayPlan.3 (dp 3)
```

### 6.14 Day Plan Block Data

```
-- ascBlockData values for standard Block
-- Day Plan Data shall be as follows:

AscDayPlanBlock ::= SEQUENCE
      {
       ascBlockDataType       INTEGER (0..255),  -- 0x00 standard block
       ascBlockDataID         INTEGER (0..255),  -- 0x0C day plan data
       ascBlockIndex1         INTEGER (0..255),  -- dayPlanEventNumber
       ascBlockQuantity1      INTEGER (0..255),  -- ## of day plan events
       ascBlockIndex2         INTEGER (0..255),  -- dayPlanNumber
       ascBlockQuantity2      INTEGER (0..255),  -- ## of day plans

       -- for (
       --      y = ascBlockIndex2;
       --      y < (ascBlockIndex2 + ascBlockQuantity2);
       --      y++)
       --      for (
       --     x = ascBlockIndex1;
       --     x < (ascBlockIndex1 + ascBlockQuantity1);
       --     x++)

       data    SEQUENCE OF AscDayPlanBlockData
      }

AscDayPlanBlockData ::= SEQUENCE
      {
       dayPlanHour.y.x              INTEGER (0..23),
       dayPlanMinute.y.x            INTEGER (0..59),
       dayPlanActionNumberOID.y.x   OBJECT IDENTIFIER
      }
```

 © 2023 AASHTO / ITE / NEMA

### 6.14.1 Day Plan Block Example

```
-- The following provides an example octet string value for
-- a SET or - of a day plan block.
--
--    SEQUENCE
-- 00       ascBlockDataType (standard block)
-- 0C       ascBlockDataID (day plan data)
-- 01       ascBlockIndex1 (start with dayPlanEventNumber=1)
-- 02       ascBlockQuantity1 (## of day plan events=2)
-- 01       ascBlockIndex2 (start with dayPlanNumber=1)
-- 02       ascBlockQuantity2 (## of day plans=2)
--    SEQUENCE OF
-- 01 04    quantity of items (ascBlockQuantity1 * ascBlockQuantity2)
--    SEQUENCE # 1 (dayPlanNumber=1 / dayPlanEventNumber=1)
-- 04       dayPlanHour.1.1 (04 hours)
-- 30       dayPlanMinute.1.1 (30 minutes)
--          dayPlanActionNumberOID.1.1 (timebaseAscActionNumber=1)
-- 0F 2B 06 01 04 01 89 36 04 02 01 05 03 01 01 01
--    SEQUENCE # 2 (dayPlanNumber=1 / dayPlanEventNumber=2)
-- 06       dayPlanHour.1.2 (06 hours)
-- 00       dayPlanMinute.1.2 (00 minutes)
--          dayPlanActionNumberOID.1.2 (timebaseAscActionNumber=2)
-- 0F 2B 06 01 04 01 89 36 04 02 01 05 03 01 01 02
--    SEQUENCE # 3 (dayPlanNumber=2 / dayPlanEventNumber=1)
-- 05       dayPlanHour.2.1 (05 hours)
-- 30       dayPlanMinute.2.1 (30 minutes)
--          dayPlanActionNumberOID.2.1 (timebaseAscActionNumber=1)
-- 0F 2B 06 01 04 01 89 36 04 02 01 05 03 01 01 01
--    SEQUENCE # 4 (dayPlanNumber=2 / dayPlanEventNumber=2)
-- 08       dayPlanHour.2.2 (08 hours)
-- 00       dayPlanMinute.2.2 (00 minutes)
--          dayPlanActionNumberOID.2.2 (timebaseAscActionNumber=2)
-- 0F 2B 06 01 04 01 89 36 04 02 01 05 03 01 01 02
```

## 6.15 Event Log Config Block Data

```
-- ascBlockData values for standard Block
-- Event Config Data shall be as follows:

AscEventConfigBlock ::= SEQUENCE
      {
       ascBlockDataType INTEGER (0..255),  -- 0x00 standard block
       ascBlockDataID   INTEGER (0..255),  -- 0x0D event log config data
       ascBlockIndex1   INTEGER (0..255),  -- eventConfigID
       ascBlockQuantity1      INTEGER (0..255),  -- ## of events

       -- for (
       --      x = ascBlockIndex1;
       --      x < (ascBlockIndex1 + ascBlockQuantity1);
       --      x++)

       data    SEQUENCE OF AscEventConfigBlockData
      }

AscEventConfigBlockData ::= SEQUENCE
      {
```

© 2023 AASHTO / ITE / NEMA 

```
       eventConfigClass.x           INTEGER (1..255),
       eventConfigMode.x            INTEGER (1..6),
       eventConfigCompareValue.x    INTEGER,
       eventConfigCompareValue2.x   INTEGER,
       eventConfigCompareOID.x      OBJECT IDENTIFIER,
       eventConfigLogOID.x          OBJECT IDENTIFIER,
       eventConfigAction.x          INTEGER (1..3)
      }
```

### 6.15.1 Event Log Config Block Example

```
-- The following provides an example octet string value for
-- a set or get of an event log config block.
--
--    SEQUENCE
-- 00       ascBlockDataType (standard block)
-- 0D       ascBlockDataID (event log config data)
-- 02       ascBlockIndex1 (start with eventConfigID=2)
-- 02       ascBlockQuantity1 (## of events=2)
--    SEQUENCE OF
-- 01 02    quantity of items (ascBlockQuantity1)
--    SEQUENCE # 1 (eventConfigID=2)
-- 01       eventConfigClass.2   (class=1)
-- 02       eventConfigMode.2    (onChange)
-- 00       eventConfigCompareValue.2  (no value)
-- 00       eventConfigCompareValue2.2 (no value)
--          eventConfigCompareOID.2    (shortAlarmStatus.0)
-- 0D 2B 06 01 04 01 89 36 04 02 01 03 09 00
--          eventConfigLogOID.2  (shortAlarmStatus.0)
-- 0D 2B 06 01 04 01 89 36 04 02 01 03 09 00
-- 03       eventConfigAction.2  (log)
--    SEQUENCE # 2 (eventConfigID=3)
-- 01       eventConfigClass.3   (class=1)
-- 02       eventConfigMode.3    (onChange)
-- 00       eventConfigCompareValue.3  (no value)
-- 00       eventConfigCompareValue2.3 (no value)
--          eventConfigCompareOID.3    (unitAlarmStatus1.0)
-- 0D 2B 06 01 04 01 89 36 04 02 01 03 08 00
--          eventConfigLogOID.3  (unitAlarmStatus1.0)
-- 0D 2B 06 01 04 01 89 36 04 02 01 03 08 00
-- 03       eventConfigAction.3  (log)
```

## 6.16 Event Class Block Data

```
-- ascBlockData values for standard Block
-- Event Class Data shall be as follows:

AscEventClassBlock ::= SEQUENCE
      {
       ascBlockDataType       INTEGER (0..255),  -- 0x00 standard block
       ascBlockDataID         INTEGER (0..255),  -- 0x0E event class data
       ascBlockIndex1         INTEGER (0..255),  -- eventClassNumber
       ascBlockQuantity1      INTEGER (0..255),  -- ## of classes

       -- for (
       --      x = ascBlockIndex1;
       --      x < (ascBlockIndex1 + ascBlockQuantity1);
```

 © 2023 AASHTO / ITE / NEMA

```
       --      x++)

       data    SEQUENCE OF AscEventClassBlockData
      }

AscEventClassBlockData ::= SEQUENCE
      {
       eventClassLimit.x            INTEGER (0..255),
       eventClassClearTime.x        Counter,
       eventClassDescription.x      OCTET STRING
      }
```

### 6.16.1 Event Class Block Example

```
-- The following provides an example octet string value for
-- a set or get of an event class block.

-- Note – the sum of all eventClassLimit values can not be
-- greater than maxEventLogSize. The values may need to be
-- set to zero prior to setting new values.
--
--    SEQUENCE
-- 00       ascBlockDataType (standard block)
-- 0E       ascBlockDataID (event class data)
-- 02       ascBlockIndex1 (start with eventClassNumber=2)
-- 02       ascBlockQuantity1 (## of classes=2)
--    SEQUENCE OF
-- 01 02    quantity of items (ascBlockQuantity1)
--    SEQUENCE # 1 (eventClassNumber=2)
-- 0A       eventClassLimit.2 (10)
-- 00 00 00 00    eventClassClearTime.2 (00:00:00 01/01/1970)
--          eventClassDescription.2 (Class 2)
-- 07 43 6C 61 73 73 20 32
--    SEQUENCE # 2 (eventClassNumber=3)
-- 0A       eventClassLimit.3 (10)
-- 00 00 00 00    eventClassClearTime.3 (00:00:00 01/01/1970)
--          eventClassDescription.3 (Class 3)
-- 07 43 6C 61 73 73 20 33
```

## 6.17 Dynamic Object Config Block Data

```
-- ascBlockData values for standard Block
-- Dynamic Object Config Data shall be as follows:

AscDynObjConfigBlock ::= SEQUENCE
      {
       ascBlockDataType       INTEGER (0..255),  -- 0x00 standard block
       ascBlockDataID         INTEGER (0..255),  -- 0x0F dyn obj config data
       ascBlockIndex1         INTEGER (0..255),  -- dynObjIndex
       ascBlockQuantity1      INTEGER (0..255),  -- ## of indexes
       ascBlockIndex2         INTEGER (0..255),  -- dynObjNumber
       ascBlockQuantity2      INTEGER (0..255),  -- ## of dyn objects

       -- for (
       --      y = ascBlockIndex2;
       --      y < (ascBlockIndex2 + ascBlockQuantity2);
       --      y++)
```

© 2023 AASHTO / ITE / NEMA 

```
       --      for (
       --     x = ascBlockIndex1;
       --     x < (ascBlockIndex1 + ascBlockQuantity1);
       --     x++)

       data    SEQUENCE OF AscDynObjConfigBlockData
      }

AscDynObjConfigBlockData ::= SEQUENCE
      {
       dynObjVariable.y.x     OBJECT IDENTIFIER
      }
```

### 6.17.1 Dynamic Object Config Block Example

```
-- The following provides an example octet string value for
-- a set or get of a dynamic object config block.
--
--    SEQUENCE
-- 00       ascBlockDataType (standard block)
-- 0F       ascBlockDataID (dyn obj config data)
-- 01       ascBlockIndex1 (start with dynObjIndex=1)
-- 02       ascBlockQuantity1 (## of indexes=2)
-- 01       ascBlockIndex2 (start with dynObjNumber=1)
-- 02       ascBlockQuantity2 (## of dyn objects=2)
--    SEQUENCE OF
-- 01 04    quantity of items (ascBlockQuantity1 * ascBlockQuantity2)
--    SEQUENCE # 1 (dynObjNumber=1 / dynObjIndex=1)
--          dynObjVariable.1.1 (coordPatternStatus.0)
-- 0D 2B 06 01 04 01 89 36 04 02 01 04 0A 00
--    SEQUENCE # 2 (dynObjNumber=1 / dynObjIndex=2)
--          dynObjVariable.1.2 (coordCycleStatus.0)
-- 0D 2B 06 01 04 01 89 36 04 02 01 04 0C 00
--    SEQUENCE # 3 (dynObjNumber=2 / dynObjIndex=1)
--          dynObjVariable.2.1 (volumeOccupancySequence.0)
-- 0E 2B 06 01 04 01 89 36 04 02 01 02 05 01 00
--    SEQUENCE # 4 (dynObjNumber=2 / dynObjIndex=2)
--          dynObjVariable.2.2 (volumeOccupancyPeriod.0)
-- 0E 2B 06 01 04 01 89 36 04 02 01 02 05 02 00
```

## 6.18 Dynamic Object Owner Block Data

```
-- ascBlockData values for standard Block
-- Dynamic Object Owner Data shall be as follows:

AscDynObjOwnerBlock ::= SEQUENCE
      {
       ascBlockDataType       INTEGER (0..255),  -- 0x00 standard block
       ascBlockDataID         INTEGER (0..255),  -- 0x10 dyn obj owner data
       ascBlockIndex1         INTEGER (0..255),  -- dynObjNumber
       ascBlockQuantity1      INTEGER (0..255),  -- ## of dyn obj

       -- for (
       --      x = ascBlockIndex1;
       --      x < (ascBlockIndex1 + ascBlockQuantity1);
       --      x++)
```

 © 2023 AASHTO / ITE / NEMA

```
       data    SEQUENCE OF AscDynObjOwnerBlockData
      }

AscDynObjOwnerBlockData ::= SEQUENCE
      {
       dynObjConfigOwner.x    OwnerString
      }
```

### 6.18.1 Dynamic Object Owner Block Example

```
-- The following provides an example octet string value for
-- a set or get of a dynamic object owner block.
--
--    SEQUENCE
-- 00       ascBlockDataType (standard block)
-- 10       ascBlockDataID (dyn obj owner data)
-- 02       ascBlockIndex1 (start with dynObjNumber=2)
-- 02       ascBlockQuantity1 (## of dyn obj=2)
--    SEQUENCE OF
-- 01 02    quantity of items (ascBlockQuantity1)
--    SEQUENCE # 1 (dynObjNumber=2)
--          dynObjConfigOwner.2 (TMC 2)
-- 05 54 4D 43 20 32
--    SEQUENCE # 2 (dynObjNumber=3)
--          dynObjConfigOwner.3 (TMC 2)
-- 05 54 4D 43 20 32
```

### 6.19 Dynamic Object Status Block Data

```
-- ascBlockData values for standard Block
-- Dynamic Object Status Data shall be as follows:

AscDynObjStatusBlock ::= SEQUENCE
      {
       ascBlockDataType       INTEGER (0..255),  -- 0x00 standard block
       ascBlockDataID         INTEGER (0..255),  -- 0x11 dyn obj status data
       ascBlockIndex1         INTEGER (0..255),  -- dynObjNumber
       ascBlockQuantity1      INTEGER (0..255),  -- ## of dyn obj

       -- for (
       --      x = ascBlockIndex1;
       --      x < (ascBlockIndex1 + ascBlockQuantity1);
       --      x++)

       data    SEQUENCE OF AscDynObjStatusBlockData
      }

AscDynObjStatusBlockData ::= SEQUENCE
      {
      dynObjConfigStatus.x    ConfigEntryStatus
      }
```

### 6.19.1 Dynamic Object Status Block Example

```
-- The following provides an example octet string value for
-- a set or get of a dynamic object status block.
```

© 2023 AASHTO / ITE / NEMA 

```
--
--    SEQUENCE
-- 00       ascBlockDataType (standard block)
-- 11       ascBlockDataID (dyn obj status data)
-- 02       ascBlockIndex1 (start with dynObjNumber=2)
-- 02       ascBlockQuantity1 (## of dyn obj=2)
--    SEQUENCE OF
-- 01 02    quantity of items (ascBlockQuantity1)
--    SEQUENCE # 1 (dynObjNumber=2)
-- 01       dynObjConfigStatus.2 (valid)
--    SEQUENCE # 2 (dynObjNumber=3)
-- 01       dynObjConfigStatus.3 (valid)
```

### 6.20 Miscellaneous ASC Block Data

```
-- ascBlockData values for standard Block
-- Misc ASC Data shall be as follows:

AscMiscBlock ::= SEQUENCE
      {
       ascBlockDataType INTEGER (0..255),  -- 0x00 standard block
       ascBlockDataID   INTEGER (0..255),  -- 0x12 misc ASC data
       ascBlockIndex1   INTEGER (0..255),
       ascBlockQuantity1 INTEGER(0..255)

       data    SEQUENCE OF AscMiscBlockData
      }

AscMiscBlockData ::= SEQUENCE
      {
       dynamicObjectPersistence.0   INTEGER (0..65535),
       volumeOccupancyPeriod.0      INTEGER (0..255),
       unitStartUpFlash.0           INTEGER (0..255),
       unitAutoPedestrianClear.0    INTEGER (1..2),
       unitBackupTime.0             INTEGER (0..65535),
       unitRedRevert.0              INTEGER (0..255),
       coordOperationalMode.0       INTEGER (0..255),
       coordCorrectionMode.0        INTEGER (1..4),
       coordMaximumMode.0           INTEGER (1..4),
       coordForceMode.0             INTEGER (1..3),
       timebaseAscPatternSync.0     INTEGER (0..65535),
       globalDayLightSaving.0 INTEGER (1..3),
       controller-standardTimeZone.0      INTEGER (-43200..43200)
      }
```

#### 6.20.1 Miscellaneous ASC Block Example

```
-- The following provides an example octet string value for
-- a set or get of a miscellaneous asc block.
--
--    SEQUENCE
-- 00       ascBlockDataType (standard block)
-- 12       ascBlockDataID (misc asc data)
--    SEQUENCE OF
-- 01 01    quantity of items
--    SEQUENCE # 1
-- 00 F0    dynamicObjectPersistence.0    (240 sec)
```

 © 2023 AASHTO / ITE / NEMA

```
-- 1E       volumeOccupancyPeriod.0 (30 sec)
-- 05       unitStartUpFlash.0      (5 sec)
-- 02       unitAutoPedestrianClear.0     (enable)
-- 03 84    unitBackupTime.0  (900 sec)
-- 14       unitRedRevert.0   (20 tSec)
-- 00       coordOperationalMode.0  (auto)
-- 03       coordCorrectionMode.0   (sw)
-- 04       coordMaximumMode.0      (inh)
-- 02       coordForceMode.0  (float)
-- 00 00    timebaseAscPatternSync.0      (midnight)
-- 03             globalDayLightSaving.0 (enableUS)
-- FF FF B9 B0    controller-standardTimeZone.0 (-18000 sec)
```

### 6.21 Phase 2 Block Data

```
-- ascBlockData values for standard Block
-- Phase 2 Data shall be as follows:

AscPhase2Block ::= SEQUENCE
    {
     ascBlockDataType     INTEGER (0..255),  -- 0x00 standard block
     ascBlockDataID       INTEGER (0..255),  -- 0x13 phase 2 data
     ascBlock2Index1      INTEGER (0..255),  -- phaseNumber
     ascBlock2Quantity1   INTEGER (0..255),  -- ## of phases

     -- for {
     --      x = ascBlock2Index1;
     --      x < (ascBlock2Index1 + ascBlock2Quantity1);
     --      x++)

     data    SEQUENCE OF AscPhase2BlockData
    }

AscPhase2BlockData ::= SEQUENCE
    {
     phaseMaximum3.x                                    INTEGER (0..6000),
     phaseYellowandRedChangeTimeBeforeEndPedClear.x     INTEGER (0..255),
     phasePedWalkService.x                              INTEGER (1..2),
     phaseDontWalkRevert.x                              INTEGER (0..255),
     phasePedAlternateClearance.x                       INTEGER (0..255),
     phasePedAlternateWalk.x                            INTEGER (0..255),
     phasePedAdvanceWalkTime.x                          INTEGER (0..255),
     phasePedDelayTime.x                                INTEGER (0..255),
     phaseAdvWarnGrnStartTime.x                         INTEGER (0..128),
     phaseAdvWarnRedStartTime.x                         INTEGER (0..255),
     phaseAltMinTimeTransition.x                        INTEGER (0..255)
    }
```

### 6.22 Vehicle Detector 2 Block Data

```
 -- ascBlockData values for standard Block
 -- Vehicle Detector 2 Data shall be as follows:

 AscVehDetector2Block ::= SEQUENCE
    {
     ascBlockDataType     INTEGER (0..255),  -- 0x00 standard block
     ascBlockDataID       INTEGER (0..255),  -- 0x14 veh detector data
     ascBlockIndex1       INTEGER (0..255),  -- vehicleDetectorNumber
     ascBlockQuantity1    INTEGER (0..255),  -- ## of veh detector
```

© 2023 AASHTO / ITE / NEMA 

```
     -- for (
     --      x = ascBlockIndex1;
     --      x < (ascBlockIndex1 + ascBlockQuantity1);
     --      x++)

     data    SEQUENCE OF AscVehDetector2BlockData
    }

 AscVehDetector2BlockData ::= SEQUENCE
    {
     vehicleDetectorOptions2.x                INTEGER (0..255),
     vehicleDetectorPairedDetector.x          INTEGER (0..255),
     vehicleDetectorPairedDetectorSpacing.x   INTEGER (1..65535),
     vehicleDetectorAvgVehicleLength.x        INTEGER (1..4000),
     vehicleDetectorLength.x                  INTEGER (1..4000 | 65535),
     vehicleDetectorTravelMode.x              INTEGER
    }
```

### 6.23 Vehicle VOL/OCC Report V3 Block Data

```
 -- ascBlockData values for standard Block
 -- Vehicle Detector Volume / Occupancy Report v3 Data shall be as follows:
```

NOTE: This block object was corrected in NTCIP 1202 v03B, removing detectorSampleDuration.x from the SEQUENCE because this object is a read-only object.

```
 AscVehDetVolOccV3Block ::= SEQUENCE
    {
     ascBlockDataType     INTEGER (0..255),  -- 0x00 standard block
     ascBlockDataID       INTEGER (0..255),  -- 0x15 veh detector data
     ascBlockIndex1       INTEGER (0..255),  -- vehicleDetectorNumber
     ascBlockQuantity1    INTEGER (0..255),  -- ## of veh detector Vol/Occ

     -- for (
     --      x = ascBlockIndex1;
     --      x < (ascBlockIndex1 + ascBlockQuantity1);
     --      x++)

     data    SEQUENCE OF AscVehDetVolOccV3BlockData
    }

 AscVehDetVolOccV3BlockData ::= SEQUENCE
    {
     volumeOccupancyPeriodV3.x                INTEGER (0..65535)
    }
```

### 6.24 Pedestrian Detector 2 Block Data

```
 -- ascBlockData values for standard Block
 -- Pedestrian Detector 2 Data is DEPRECATED.
```

This block object was deprecated in NTCIP 1202 v03B because pedestrianDetectorReset.x is a 'C' object type.

```
 AscPedDetector2Block ::= SEQUENCE
    {
     ascBlockDataType     INTEGER (0..255),  -- 0x00 standard block
     ascBlockDataID       INTEGER (0..255),  -- 0x16 ped detector data
```

 © 2023 AASHTO / ITE / NEMA

```
     ascBlockIndex1       INTEGER (0..255),  -- pedestrianDetectorNumber
     ascBlockQuantity1    INTEGER (0..255),  -- ## of ped detectors

     -- for (
     --      x = ascBlockIndex1;
     --      x < (ascBlockIndex1 + ascBlockQuantity1);
     --      x++)

     data    SEQUENCE OF AscPedDetector2BlockData
    }

-- Connected Vehicles Configuration Data is DEPRECATED.


 AscPedDetector2BlockData ::= SEQUENCE
    {
     pedestrianDetectorReset.x          INTEGER  (0..1)
    }
```

### 6.25 Pedestrian Detector Report Block Data

```
 -- ascBlockData values for standard Block
 -- Pedestrian Detector Report Data shall be as follows:

 NOTE: This block object was corrected in NTCIP 1202 v03B, removing
 pedestrianDetectorSampleDuration.x from the SEQUENCE because this object is a
 read-only object.

 AscPedDetectorReportBlock ::= SEQUENCE

    {
     ascBlockDataType     INTEGER (0..255),  -- 0x00 standard block
     ascBlockDataID       INTEGER (0..255),  -- 0x17 ped detector report data

     data    SEQUENCE OF AscPedDetectorReportBlockData
    }

 AscPedDetectorReportBlockData ::= SEQUENCE
    {
     pedestrianDetectorPeriod.0           INTEGER (0..65535)
    }
```

### 6.26 Pedestrian Button Config Block Data

```
 -- ascBlockData values for standard Block
 -- Pedestrian Button Config Data shall be as follows:

 AscPedButtonConfigBlock ::= SEQUENCE

    {
     ascBlockDataType     INTEGER (0..255),  -- 0x00 standard block
     ascBlockDataID       INTEGER (0..255),  -- 0x18 ped button config data

     data    SEQUENCE OF AscPedButtonConfigBlockData
    }

 AscPedButtonConfigBlockData ::= SEQUENCE
    {
```

© 2023 AASHTO / ITE / NEMA 

```
     pedestrianButtonPushTime.0           INTEGER (0..255)
    }
```

### 6.27 Pattern 2 Block Data

```
-- ascBlockData values for standard Block
-- Pattern 2 Data is DEPRECATED.

This block object was deprecated in NTCIP 1202 v03B because several object
definitions in the SEQUENCE were deprecated in NTCIP 1202 v03B. This block
object is replaced by 6.56, Pattern 3 Block Data.

AscPattern2Block ::= SEQUENCE
    {
     ascBlockDataType     INTEGER (0..255),  -- 0x00 standard block
     ascBlockDataID       INTEGER (0..255),  -- 0x19 pattern data
     ascBlockIndex1       INTEGER (0..255),  -- patternNumber
     ascBlockQuantity1    INTEGER (0..255),  -- ## of patterns

     -- for (
     --      x = ascBlockIndex1;
     --      x < (ascBlockIndex1 + ascBlockQuantity1);
     --      x++)

     data    SEQUENCE OF AscPattern2BlockData
    }

AscPattern2BlockData ::= SEQUENCE
    {
     patternCoordSyncPoint.x         INTEGER,
     patternOptions.x                INTEGER  (1..255),
     patternSpatEnabledLanes.x       OCTET STRING
    }
```

### 6.28 Split 2 Block Data

```
-- ascBlockData values for standard Block
-- Split 2 Data shall be as follows:

AscSplit2Block ::= SEQUENCE
    {
     ascBlockDataType     INTEGER (0..255),  -- 0x00 standard block
     ascBlockDataID       INTEGER (0..255),  -- 0x1A split 2 data
     ascBlockIndex1       INTEGER (0..255),  -- splitPhase
     ascBlockQuantity1    INTEGER (0..255),  -- ## of phases
     ascBlockIndex2       INTEGER (0..255),  -- splitNumber
     ascBlockQuantity2    INTEGER (0..255),  -- ## of splits

     -- for (
     --      y = ascBlockIndex2;
     --      y < (ascBlockIndex2 + ascBlockQuantity2);
     --      y++)
     --      for (
     --           x = ascBlockIndex1;
     --           x < (ascBlockIndex1 + ascBlockQuantity1);
     --           x++)

     data    SEQUENCE OF AscSplit2BlockData
```

 © 2023 AASHTO / ITE / NEMA

```
    }

AscSplitBlockData ::= SEQUENCE
    {
    splitOptions.y.x      INTEGER (0..255)
    }
```

### 6.29 Preempt 2 Block Data

```
-- ascBlockData values for standard Block
-- Preempt 2 Data shall be as follows:

AscPreempt2Block ::= SEQUENCE
    {
     ascBlockDataType     INTEGER (0..255),  -- 0x00 standard block
     ascBlockDataID       INTEGER (0..255),  -- 0x1B preempt data
     ascBlockIndex1       INTEGER (0..255),  -- preemptNumber
     ascBlockQuantity1    INTEGER (0..255),  -- ## of preempts

     -- for (
     --      x = ascBlockIndex1;
     --      x < (ascBlockIndex1 + ascBlockQuantity1);
     --      x++)

     data    SEQUENCE OF AscPreempt2BlockData
    }

AscPreempt2BlockData ::= SEQUENCE
    {
     preemptSequenceNumber.x    INTEGER (1..255),
     preemptExitType.x          INTEGER
    }
```

### 6.30 Preempt Queue Delay Block Data

```
-- ascBlockData values for standard Block
-- Preempt Queue Delay Data shall be as follows:

AscPreemptQueueDelayBlock ::= SEQUENCE
    {
     ascBlockDataType     INTEGER (0..255),  -- 0x00 standard block
     ascBlockDataID       INTEGER (0..255),  -- 0x1C preempt data
     ascBlockIndex1       INTEGER (0..255),  -- preemptNumber
     ascBlockQuantity1    INTEGER (0..255),  -- ## of preempt
     ascBlockIndex2       INTEGER (0..255),  -- vehicleDetectorNumber
     ascBlockQuantity2    INTEGER (0..255),  -- ## of Vehicle Detectors

     -- for (
     --      y = ascBlockIndex2;
     --      y < (ascBlockIndex2 + ascBlockQuantity2);
     --      y++)
     --      for (
     --           x = ascBlockIndex1;
     --           x < (ascBlockIndex1 + ascBlockQuantity1);
     --           x++)

     data    SEQUENCE OF AscPreemptQueueDelayBlockData
    }
```

© 2023 AASHTO / ITE / NEMA 

```
AscPreemptQueueDelayBlockData ::= SEQUENCE
    {
     preemptDetectorWeight.y.x      INTEGER (1..1000)
    }
```

### 6.31 Channel 2 Block Data

```
-- ascBlockData values for standard Block
-- Channel 2 Data is DEPRECATED.

This block object was deprecated in NTCIP 1202 v03B because all the object
definitions in the SEQUENCE were deprecated in NTCIP 1202 v03B.

AscChannel2Block ::= SEQUENCE
    {
     ascBlockDataType     INTEGER (0..255),  -- 0x00 standard block
     ascBlockDataID       INTEGER (0..255),  -- 0x1D sequence data
     ascBlockIndex1       INTEGER (0..255),  -- channelNumber
     ascBlockQuantity1    INTEGER (0..255),  -- ## of channels

     -- for (
     --      x = ascBlockIndex1;
     --      x < (ascBlockIndex1 + ascBlockQuantity1);
     --      x++)

     data    SEQUENCE OF AscChannel2BlockData
    }

AscChannel2BlockData ::= SEQUENCE
    {
     channelGreenType.x             INTEGER (0..255),
     channelGreenIncluded.x         OCTET STRING,
     channelIntersectionId.x        INTEGER (0..65535)
    }
```

### 6.32 Overlap 2 Block Data

```
-- ascBlockData values for standard Block
-- Overlap 2 Data shall be as follows:

AscOverlap2Block ::= SEQUENCE
    {
     ascBlockDataType    INTEGER (0..255),   -- 0x00 standard block
     ascBlockDataID      INTEGER (0..255),   -- 0x1E overlap data
     ascBlockIndex1      INTEGER (0..255),   -- overlapNumber
     ascBlockQuantity1   INTEGER (0..255),   -- ## of overlaps

     -- for (
     --      x = ascBlockIndex1;
     --      x < (ascBlockIndex1 + ascBlockQuantity1);
     --      x++)

     data    SEQUENCE OF AscOverlap2BlockData
    }

AscOverlap2BlockData ::= SEQUENCE
    {
```

 © 2023 AASHTO / ITE / NEMA

```
     overlapWalk.x             INTEGER  (0..255),
     overlapPedClearance.x     INTEGER  (0..255),
     overlapConflictingPedPhases       OCTET STRING
    }
```

### 6.33 Communications Port Definition Block Data

```
-- ascBlockData values for standard Block
-- Communications Port Definition Data shall be as follows:

AscCommPortDefBlock ::= SEQUENCE
    {
     ascBlockDataType     INTEGER (0..255),  -- 0x00 standard block
     ascBlockDataID       INTEGER (0..255),  -- 0x1F comm port def data
     ascBlockIndex1       INTEGER (1..255),  -- ifIndex
     ascBlockQuantity1    INTEGER (1..255),  -- ## of Comm Port

     -- for (
     --      x = ascBlockIndex1;
     --      x < (ascBlockIndex1 + ascBlockQuantity1);
     --      x++)

     data    SEQUENCE OF AscCommPortDefBlockData
    }

AscCommPortDefBlockData ::= SEQUENCE
    {
     commPortTypeIndex.x         INTEGER,
     commPortEnable.x            INTEGER,
     commPortProtocol.x          INTEGER (0..32)
    }
```

### 6.34 Ethernet Comm Port Definition Block Data

```
-- ascBlockData values for standard Block
-- Ethernet Communications Port Definition Data shall be as follows:

NOTE: This block object was corrected in NTCIP 1202 v03B, removing
ecfgIpAddr.x, ecfgNetMask.x, ecfgGateway.x, and ecfgDNS.x from the SEQUENCE
because those objects are read-only objects.

AscEthernetCommPortDefBlock ::= SEQUENCE
    {
     ascBlockDataType     INTEGER (0..255),  -- 0x00 standard block
     ascBlockDataID       INTEGER (0..255),  -- 0x20 ethernet comm port data
     ascBlockIndex1       INTEGER (1..255),  -- ifIndex
     ascBlockQuantity1    INTEGER (1..255),  -- ## of Comm Port

     -- for (
     --      x = ascBlockIndex1;
     --      x < (ascBlockIndex1 + ascBlockQuantity1);
     --      x++)

     data    SEQUENCE OF AscEthernetCommPortDefBlockData
    }

AscEthernetCommPortDefBlockData ::= SEQUENCE
    {
     ecfgLogicalName.x           OCTET STRING,
```

© 2023 AASHTO / ITE / NEMA 

```
     ecfgStaticIpAddr.x          IpAddress,
     ecfgStaticNetMask.x         IpAddress,
     ecfgStaticGateway.x         IpAddress,
     ecfgStaticDNS.x             IpAddress
    }
```

### 6.35 SIU Port 1 Block Data

```
-- ascBlockData values for standard Block
-- SIU Port 1 Data shall be as follows:

AscSiuPort1Block ::= SEQUENCE
    {
     ascBlockDataType      INTEGER (0..255),  -- 0x00 standard block
     ascBlockDataID        INTEGER (0..255),  -- 0x21 port 1 data
     ascBlockIndex1        INTEGER (1..255),  -- siuport1Number
     ascBlockQuantity1     INTEGER (1..255),  -- ## of SIU Port address

     -- for (
     --      x = ascBlockIndex1;
     --      x < (ascBlockIndex1 + ascBlockQuantity1);
     --      x++)

     data    SEQUENCE OF AscSiuPort1BlockData
    }

AscSiuPort1BlockData ::= SEQUENCE
    {
     siuport1DevicePresent.x     INTEGER (0..1)
    }
```

### 6.36 Miscellaneous 2 ASC Block Data

```
-- ascBlockData values for standard Block
-- Miscellaneous ASC 2 Data shall be as follows:

NOTE: This block object was corrected in NTCIP 1202 v03B, removing
unitMCETimeout.0 and unitMCEIntAdv.0 from the SEQUENCE because those objects
are control ('C') object types, and removing eventLogConfigPersistence.0 and
eventLogPersistence.0, which were draft object definitions, but were removed
before publication of the NTCIP 1202 v03A standard.

AscMisc2Block ::= SEQUENCE
    {
     ascBlockDataType     INTEGER (0..255),      -- 0x00 standard block
     ascBlockDataID       INTEGER (0..255),      -- 0x22 misc ASC 2 data

     data    SEQUENCE OF AscMisc2BlockData
    }

AscMisc2BlockData ::= SEQUENCE
    {
     unitStartUpFlashMode.0               INTEGER,
     unitUserDefinedBackupTime.0          INTEGER (0..16777216),
     unitCoordSyncPoint.0                 INTEGER}
```

 © 2023 AASHTO / ITE / NEMA

### 6.37 User-Defined Backup Timer Definition Block Data

```
-- ascBlockData values for standard Block
-- User-Defined Backup Timer Data shall be as follows:

AscUserDefinedBackupTimerBlock ::= SEQUENCE
  {
  ascBlockDataType   INTEGER (0..255),     -- 0x00 standard block
  ascBlockDataID     INTEGER (0..255),     -- 0x23 user-def backup timer data
  ascBlockIndex1     INTEGER (1..65535),
  --                       unitUserDefinedBackupTimeContentNumber
  ascBlockQuantity1  INTEGER (1..65535),  -- ## of OIDs in User-Def Timer

  data        SEQUENCE OF AscUserDefinedBackupTimerBlockData
  }

  AscUserDefinedBackupTimerBlockData ::= SEQUENCE
     {
      unitUserDefinedBackupTimeContentOID.x           OBJECT IDENTIFIER,
      unitUserDefinedBackupTimeContentDescription.x   OCTET STRING
     }
```

### 6.38 ASC Location Block Data

```
-- ascBlockData values for standard Block
-- ASC Location Data shall be as follows:

NOTE: This block object was corrected in NTCIP 1202 v03B, removing
essLatitude.0, essLongitude.0, essReferenceHeight.0 from the SEQUENCE because
those objects are read-only objects.

AscLocationBlock ::= SEQUENCE
    {
     ascBlockDataType     INTEGER (0..255),      -- 0x00 standard block
     ascBlockDataID       INTEGER (0..255),      -- 0x24 ASC location data

     data    SEQUENCE OF AscLocationBlockData
    }

AscLocationBlockData ::= SEQUENCE
    {
     ascElevationOffset.0                 INTEGER (0..31)
    }
```

### 6.39 Global Set ID Definition Block Data

```
-- ascBlockData values for standard Block
-- Global Set ID Data shall be as follows:

AscGlobalSetIDBlock ::= SEQUENCE
    {
     ascBlockDataType   INTEGER (0..255),    -- 0x00 standard block
     ascBlockDataID     INTEGER (0..255),    -- 0x25 Global Set ID data
     ascBlockIndex1     INTEGER (1..65535),  -- globalSetIdNumber
     ascBlockQuantity1  INTEGER (1..65535),  -- ## of OIDs in Global Set ID

     data    SEQUENCE OF AscGlobalSetIDBlockData
    }

  AscGlobalSetIDBlockData ::= SEQUENCE
```

© 2023 AASHTO / ITE / NEMA 

```
    {
     globalSetIdOID.x              OCTET STRING
    }
```

### 6.40 ASC Environmental Monitoring Block Data

```
-- ascBlockData values for standard Block
-- ASC Environmental Monitoring Data shall be as follows:

AscEnvironMonitorBlock ::= SEQUENCE
    {
     ascBlockDataType     INTEGER (0..255),   -- 0x00 standard block
     ascBlockDataID       INTEGER (0..255),   -- 0x26 CV Config data
     ascBlockIndex1       INTEGER (0..255),   -- cabinetEnvironDeviceNumber
     ascBlockQuantity1    INTEGER (0..255),   -- ## of devices
     ascBlockIndex2       INTEGER (0..255),   -- cabinetEnvironDeviceIndex
     ascBlockQuantity2    INTEGER (0..255),   -- ## of indices

     -- for (
     --      y = ascBlockIndex2;
     --      y < (ascBlockIndex2 + ascBlockQuantity2);
     --      y++)
     --      for (
     --           x = ascBlockIndex1;
     --           x < (ascBlockIndex1 + ascBlockQuantity1);
     --           x++)

     data    SEQUENCE OF AscEnvironMonitorBlockData
    }

AscEnvironMonitorBlockData ::= SEQUENCE
    {
     cabinetEnvironDeviceType.y.x         INTEGER,
     cabinetEnvironDeviceDescription.y.x  DisplayString (SIZE (0..64))

    }
```

### 6.41 ASC Cabinet Temperature Sensor Block Data

```
-- ascBlockData values for standard Block
-- ASC Cabinet Temperature Sensor Data shall be as follows:

AscCabinetTemperatureSensorBlock ::= SEQUENCE
    {
     ascBlockDataType     INTEGER (0..255),   -- 0x00 standard block
     ascBlockDataID       INTEGER (0..255),   -- 0x27 Cabinet Temp Sensor data
     ascBlockIndex1       INTEGER (0..255),   -- cabinetTempSensorIndex
     ascBlockQuantity1    INTEGER (0..255),   -- ## of devices

     --      for (
     --           x = ascBlockIndex1;
     --           x < (ascBlockIndex1 + ascBlockQuantity1);
     --           x++)

     data    SEQUENCE OF AscCabinetTemperatureSensorBlockData
    }

AscCabinetTemperatureSensorBlockData ::= SEQUENCE
    {
```

 © 2023 AASHTO / ITE / NEMA

```
     cabinetTempSensorDescription.x       DisplayString (SIZE (0..64)),
     cabinetTempSensorHighThreshold.x     INTEGER  (-128..127),
     cabinetTempSensorLowThreshold.x      INTEGER  (-128..127)
    }
```

### 6.42 ASC Cabinet Humidity Sensor Block Data

```
-- ascBlockData values for standard Block
-- ASC Cabinet Humidity Sensor Data shall be as follows:

AscCabinetHumiditySensorBlock ::= SEQUENCE
    {
     ascBlockDataType     INTEGER (0..255),   -- 0x00 standard block
     ascBlockDataID       INTEGER (0..255),   -- 0x28 cabinet humidity data
     ascBlockIndex1       INTEGER (0..255),   -- cabinetHumiditySensorIndex
     ascBlockQuantity1    INTEGER (0..255),   -- ## of devices

     --      for (
     --           x = ascBlockIndex1;
     --           x < (ascBlockIndex1 + ascBlockQuantity1);
     --           x++)

     data    SEQUENCE OF AscCabinetHumiditySensorBlockData
    }

AscCabinetHumiditySensorBlockData ::= SEQUENCE
    {
     cabinetHumiditySensorDescription.x   DisplayString (SIZE (0..64)),
     cabinetHumidityThreshold.x           INTEGER  (0..101)
    }
```

### 6.43 ASC I/O Input Mapping Block Data

```
-- ascBlockData values for standard Block
-- ASC I/O Input Mapping Data shall be as follows:

AscIOinputMapBlock ::= SEQUENCE
    {
     ascBlockDataType     INTEGER (0..255),   -- 0x00 standard block
     ascBlockDataID       INTEGER (0..255),   -- 0x29 ASC I/O Mapping data
     ascBlockIndex1       INTEGER (0..255),   -- ascIOmapNumber
     ascBlockQuantity1    INTEGER (0..255),   -- ## of I/O maps
     ascBlockIndex2       INTEGER (0..65535), -- ascIOinputMapIOindex
     ascBlockQuantity2    INTEGER (0..65535), -- ## of indices

     --  for (
     --    z = ascBlockIndex2;
     --    z < (ascBlockIndex2 + ascBlockQuantity2);
     --    z++)
     --    for (
     --        y = ascBlockIndex1;
     --        y < (ascBlockIndex1 + ascBlockQuantity1);
     --        y++)
     data    SEQUENCE OF AscIOMapConfigBlockData
    }

AscIOMapConfigBlockData::= SEQUENCE
    {
   ascIOinputMapDeviceType.z.y  INTEGER (0..255),  -- Device Type
```

© 2023 AASHTO / ITE / NEMA 

```
   ascIOinputMapDevicePNN.z.y   INTEGER (0..65535),-- NEMA PNN for custom
   ascIOinputMapDevicePtype.z.y INTEGER (0..255),  -- Custom device type
   ascIOinputMapDeviceAddr.z.y  INTEGER (0..255),  -- Device addr
   ascIOinputMapDevicePin.z.y   INTEGER (0..255),  -- device I/O pin index
   ascIOinputMapFuncType.z.y    INTEGER (0..65535),  -- 0 or nemaPrivate code
   ascIOinputMapFuncPtype.z.y   INTEGER (0..255),  -- Custom function type set
   ascIOinputMapFunction.z.y    INTEGER (0..255),  -- function
   ascIOinputMapFuncIndex.z.y   INTEGER (0..255)   -- function index
    }
```

### 6.44 ASC I/O Input Status Block Data

```
-- ascBlockData values for standard Block
-- ASC I/O Input Status Data is DEPRECATED.

This block object was deprecated in NTCIP 1202 v03B because all the object
definitions in the SEQUENCE are read-only.

AscIOinputStatusBlock ::= SEQUENCE
    {
     ascBlockDataType     INTEGER (0..255),   -- 0x00 standard block
     ascBlockDataID       INTEGER (0..255),   -- 0x2A ASC I/O Mapping data
     ascBlockIndex1       INTEGER (0..255),   -- ascIOmapNumber
     ascBlockQuantity1    INTEGER (0..255),   -- ## of I/O maps
     ascBlockIndex2       INTEGER (0..65535), -- ascIOinputMapIOindex
     ascBlockQuantity2    INTEGER (0..65535), -- ## of indices

     --  for (
     --    z = ascBlockIndex2;
     --    z < (ascBlockIndex2 + ascBlockQuantity2);
     --    z++)
     --    for (
     --        y = ascBlockIndex1;
     --        y < (ascBlockIndex1 + ascBlockQuantity1);
     --        y++)
     data    SEQUENCE OF AscIOinputStatusBlockData
    }

AscIOinputStatusBlockData::= SEQUENCE
    {
   ascIOinputMapDevPinDescr.z.y  OCTET STRING (0..32), -- Device Pin
Description
   ascIOinputMapDevPinStatus.z.y INTEGER (0..1)       -- Device Pin Status
    }
```

### 6.45 ASC I/O Output Mapping Block Data

```
-- ascBlockData values for standard Block
-- ASC I/O Output Mapping Data shall be as follows:

AscIOoutputMapBlock ::= SEQUENCE
    {
     ascBlockDataType     INTEGER (0..255),   -- 0x00 standard block
     ascBlockDataID       INTEGER (0..255),   -- 0x2B ASC I/O Mapping data
     ascBlockIndex1       INTEGER (0..255),   -- ascIOmapNumber
     ascBlockQuantity1    INTEGER (0..255),   -- ## of I/O maps
     ascBlockIndex2       INTEGER (0..65535), -- ascIOoutputMapIOindex
     ascBlockQuantity2    INTEGER (0..65535), -- ## of indices
```

 © 2023 AASHTO / ITE / NEMA

```
     --  for (
     --    z = ascBlockIndex2;
     --    z < (ascBlockIndex2 + ascBlockQuantity2);
     --    z++)
     --    for (
     --        y = ascBlockIndex1;
     --        y < (ascBlockIndex1 + ascBlockQuantity1);
     --        y++)
     data    SEQUENCE OF AscIOMapConfigBlockData
    }

AscIOoutputMapBlockData::= SEQUENCE
    {
   ascIOoutputMapDeviceType.z.y  INTEGER (0…255),  -- Device Type
   ascIOoutputMapDevicePNN.z.y   INTEGER (0..65535),-- NEMA PNN for custom
   ascIOoutputMapDevicePtype.z.y INTEGER (0..255),  -- Custom device type
   ascIOoutputMapDeviceAddr.z.y  INTEGER (0..255),  -- Device addr
   ascIOoutputMapDevicePin.z.y   INTEGER (0..255),  -- device I/O pin index
   ascIOoutputMapFuncType.z.y    INTEGER (0..65535),  -- 0 or nemaPrivate code
   ascIOoutputMapFuncPtype.z.y   INTEGER (0..255),  -- Custom function type
set
   ascIOoutputMapFunction.z.y    INTEGER (0..255),  -- function
   ascIOoutputMapFuncIndex.z.y   INTEGER (0..255)   -- function index
    }
```

### 6.46 ASC I/O Output Status Block Data

```
-- ascBlockData values for standard Block
-- ASC I/O Output Status Data is DEPRECATED.
This block object was deprecated in NTCIP 1202 v03B because all the object
definitions in the SEQUENCE are read-only.

AscIOoutputStatusBlock ::= SEQUENCE
{
ascBlockDataType  INTEGER (0..255), -- 0x00 standard block
ascBlockDataID    INTEGER (0..255), -- 0x2C ASC I/O Mapping data
ascBlockIndex1    INTEGER (0..255), -- ascIOmapNumber
ascBlockQuantity1 INTEGER (0..255), -- ## of I/O maps
ascBlockIndex2    INTEGER (0..65535),     -- ascIOoutputMapIOindex
ascBlockQuantity2 INTEGER (0..65535),     -- ## of indices

     --    for (
     --      z = ascBlockIndex2;
     --      z < (ascBlockIndex2 + ascBlockQuantity2);
     --      z++)
     --    for (
     --        y = ascBlockIndex1;
     --        y < (ascBlockIndex1 + ascBlockQuantity1);
     --        y++)
     data     SEQUENCE OF AscIOoutputStatusBlockData
     }

AscIOoutputStatusBlockData::= SEQUENCE
{
   ascIOoutputMapDevPinDescr.z.y  OCTET STRING (0..32), -- Device Pin
Description
   ascIOoutputMapDevPinStatus.z.y INTEGER (0..1)      -- Device Pin Status
    }
```

© 2023 AASHTO / ITE / NEMA 

### 6.47 ASC I/O Mapping Description Block Data

```
-- ascBlockData values for standard Block
-- ASC I/O Mapping Description Data shall be as follows:

AscIOMapDescriptionBlock ::= SEQUENCE
    {
     ascBlockDataType     INTEGER (0..255),    -- 0x00 standard block
     ascBlockDataID       INTEGER (0..255),    -- 0x2D ASC I/O Mapping data
     ascBlockIndex1       INTEGER (0..255),    -- ascIOmapNumber
     ascBlockQuantity1    INTEGER (0..255),    -- ## of I/O maps

     -- for (
     --    y = ascBlockIndex1;
     --    y < (ascBlockIndex1 + ascBlockQuantity1);
     --    y++)
     data    SEQUENCE OF AscIOMapDescriptionBlockData
    }

AscIOMapDescriptionBlockData::= SEQUENCE
    {
   ascIOmapDescription.y     OCTET STRING (0..32) – I/O Map Description
    }
```

### 6.48 CV Configuration ASC Block Data

```
-- ascBlockData values for standard Block
-- Connected Vehicles Configuration Data is DEPRECATED.

This block object was deprecated in NTCIP 1202 v03B because several object
definitions in the SEQUENCE were deprecated in NTCIP 1202 v03B. This block
object is replaced by 6.55, AscCvConfig2Block.

AscCvConfigBlock ::= SEQUENCE
    {
     ascBlockDataType     INTEGER (0..255),      -- 0x00 standard block
     ascBlockDataID       INTEGER (0..255),      -- 0x2E CV Config data

     data    SEQUENCE OF AscCvConfigBlockData
    }

AscCvConfigBlockData ::= SEQUENCE
    {
     rsuCommPort.0                          INTEGER (0..255),
     spatEnabledLanesCommand.0              OCTET STRING,
     spatOptions.0                          INTEGER(0..255),
     cvDetectionActuationSamplePeriod,0     INTEGER (1..65535),
     detectionReportCollection.0            INTEGER (0..255),
     spatStatus.0                           INTEGER (0..16)
    }
```

### 6.49 CV Logical RSU Ports Configuration Block Data

```
-- ascBlockData values for standard Block
-- Connected Vehicle RSU Ports Configuration Data shall be as follows:

AscCvRsuPortConfigBlock ::= SEQUENCE
    {
```

 © 2023 AASHTO / ITE / NEMA

```
     ascBlockDataType   INTEGER (0..255),    -- 0x00 standard block
     ascBlockDataID     INTEGER (0..255),    -- 0x2F CV RSU Port Config data
     ascBlockIndex1     INTEGER (1..255),    -- rsuPortIndex
     ascBlockQuantity1  INTEGER (1..255),    -- ## of CV RSU Port

      data    SEQUENCE OF AscCvRsuPortConfigBlockData
     }

  AscCvRsuPortConfigBlockData ::= SEQUENCE
     {
      rsuPortPointer.x              INTEGER (1..255),
      rsuPortName.x                 DisplayString (SIZE (0..255)),
      rsuPortPollingPeriod.x        INTEGER (0..65535),
      rsuPortWatchdogTime.x         INTEGER (0..65535),
      rsuPortNumber.x               INTEGER (0..65535)
     }
```

### 6.50 CV SPaT Enabled Lanes Concurrency Configuration Block Data

```
-- ascBlockData values for standard Block
-- Connected Vehicle SPaT-Enabled Lanes Concurrency Configuration Data
-- shall be as follows:

AscCvSpatLanesConcurrencyConfigBlock ::= SEQUENCE
    {
     ascBlockDataType   INTEGER (0..255),    -- 0x00 standard block
     ascBlockDataID     INTEGER (0..255),    -- 0x30 CV SPaT Lanes Concur data
     ascBlockIndex1     INTEGER (1..254),    -- enabledLaneIndex
     ascBlockQuantity1  INTEGER (1..254),    -- ## of MAP Lane

      data    SEQUENCE OF AscCvSpatLanesConcurrencyConfigBlockData
     }

  AscCvSpatLanesConcurrencyConfigBlockData ::= SEQUENCE
     {
      enabledLaneConcurrency.x       OCTET STRING
     }
```

### 6.51 CV SPaT RSU Ports Configuration Block Data

```
-- ascBlockData values for standard Block
-- Connected Vehicle SPaT RSU Port Configuration Data shall be as follows:

AscCvSpatRsuConfigBlock ::= SEQUENCE
    {
     ascBlockDataType   INTEGER (0..255),    -- 0x00 standard block
     ascBlockDataID     INTEGER (0..255),    -- 0x31 CV SPaT RSU Port data
     ascBlockIndex1     INTEGER (1..255),    -- rsuPortIndex
     ascBlockQuantity1  INTEGER (1..255),    -- ## of SPaT RSU Port

      data    SEQUENCE OF AscCvSpatRsuConfigBlockData
     }

  AscCvSpatRsuConfigBlockData ::= SEQUENCE
     {
      spatPortOptions.x              INTEGER (0..255),
      spatPortMapActivationCode.x    MapActivationCode
     }
```

© 2023 AASHTO / ITE / NEMA 

### 6.52 CV Detector Configuration Block Data

```
-- ascBlockData values for standard Block
-- Connected Vehicle Detector Configuration Data is DEPRECATED.

This block object was deprecated in NTCIP 1202 v03B because all the object
definitions in the SEQUENCE were deprecated in NTCIP 1202 v03B.

AscCvDetectorConfigBlock ::= SEQUENCE
    {
     ascBlockDataType   INTEGER (0..255),    -- 0x00 standard block
     ascBlockDataID     INTEGER (0..255),    -- 0x32 CV Detector Config data
     ascBlockIndex1     INTEGER (1..255),    -- cvDetectorNumber
     ascBlockQuantity1  INTEGER (1..255),    -- ## of CV Detector

     data    SEQUENCE OF AscCvDetectorConfigBlockData
    }

 AscCvDetectorConfigBlockData ::= SEQUENCE
    {
     cvDetectorOptions.x            INTEGER (0..255),
     cvDetectorIntersection.x       INTEGER (1..65535),
     cvDetectorInput.x              OCTET STRING,
     cvDetectorAssignment.x         OCTET STRING,
     cvDetectorSamplePeriod.x       INTEGER (0..255),
     cvDetectorUserClass.x          INTEGER (0..255),
     cvDetectorHeading.x            INTEGER (0..65535), -- see J2735-2016
     DE_HeadingSlice
     cvDetectorMinSpeed.x           INTEGER (0..8191),
     cvDetectorMaxSpeed.x           INTEGER (0..8191),
     cvDetectorMinSize.x            INTEGER (0..4194303),
     cvDetectorMaxSize.x            INTEGER (0..4194303),
     cvDetectorFlags.x              INTEGER (0..255)
    }
```

### 6.53 CV Detection Zone Configuration

```
-- ascBlockData values for standard Block
-- Connected Vehicle Detection Zone Configuration Data is DEPRECATED.

This block object was deprecated in NTCIP 1202 v03B because all object
definitions in the SEQUENCE were deprecated in NTCIP 1202 v03B.

AscCvDetectionZoneConfigBlock ::= SEQUENCE
    {
     ascBlockDataType   INTEGER (0..255),    -- 0x00 standard block
     ascBlockDataID     INTEGER (0..255),    -- 0x33 CV Detection Zone
                                             -- Config data
     ascBlockIndex1     INTEGER (1..255),    -- detectionZoneNodePointIndex
     ascBlockQuantity1  INTEGER (1..255),    -- ## of CV Detection Zone

     data    SEQUENCE OF AscCvDetectionZoneConfigBlockData
    }

 AscCvDetectionZoneConfigBlockData ::= SEQUENCE
    {
     detectionZoneNodePointX.x         INTEGER (-32767..32767),
     detectionZoneNodePointY.x         INTEGER (-32767..32767),
     detectionZoneNodePointWidth.x     INTEGER (-32767..32767),
     detectionZoneNodePointZ.x         INTEGER (-32767..32767),
```

 © 2023 AASHTO / ITE / NEMA

```
     detectionZoneNodePointHeight.x    INTEGER (0.. 32767)
    }
```

### 6.54 CV Detection Report Block Data

```
-- ascBlockData values for standard Block
-- Only for use at interface between ASC and RSU with the RSU being the
-- Management Station sending the data from the RSU to the ASC.
-- Connected Vehicle Detection Report Data shall be as follows:

AscCvDetectionReportBlock ::= SEQUENCE
    {
     ascBlockDataType   INTEGER (0..255),    -- 0x00 standard block
     ascBlockDataID     INTEGER (0..255),    -- 0x34 CV Detection Report data
     ascBlockIndex1     INTEGER (1..255),    -- cvDetectorNumber
     ascBlockQuantity1  INTEGER (1..255),    -- ## of CV Detection Reports

     data    SEQUENCE OF AscCvDetectionReportBlockData
    }

 AscCvDetectionReportBlockData ::= SEQUENCE
    {
     detectionReportTime.x             INTEGER (0..3601000),
     detectionReportVolume.x           INTEGER (0..255),
     detectionReportSpeed.x            INTEGER (0..255),
     detectionReportTravelTime.x       INTEGER (0..65535),
     detectionReportQueue.x            INTEGER (0..255),
     detectionReportGap.x              INTEGER (0..65535),
     detectionReportPlatoon.x          INTEGER (0..255)
    }
```

### 6.55 CV Configuration 2 ASC Block Data

```
-- ascBlockData values for standard Block
-- Connected Vehicles 2 Configuration Data shall be as follows:

AscCvConfig2Block ::= SEQUENCE
    {
     ascBlockDataType     INTEGER (0..255),     -- 0x00 standard block
     ascBlockDataID       INTEGER (0..255),     -- 0x35 CV Config data

     data    SEQUENCE OF AscCvConfig2BlockData
    }

AscCvConfig2BlockData ::= SEQUENCE
    {
     rsuCommPort.0                       INTEGER (0..255),
     spatOptions.0                       INTEGER(0..255)
    }
```

### 6.56 Pattern 3 Block Data

```
-- ascBlockData values for standard Block
-- Pattern 3 Data shall be as follows:

AscPattern3Block ::= SEQUENCE
    {
     ascBlockDataType     INTEGER (0..255),  -- 0x00 standard block
     ascBlockDataID       INTEGER (0..255),  -- 0x36 pattern data
```

© 2023 AASHTO / ITE / NEMA 

```
     ascBlockIndex1       INTEGER (0..255),  -- patternNumber
     ascBlockQuantity1    INTEGER (0..255),  -- ## of patterns

     -- for (
     --      x = ascBlockIndex1;
     --      x < (ascBlockIndex1 + ascBlockQuantity1);
     --      x++)

     data    SEQUENCE OF AscPattern3BlockData
    }

AscPattern3BlockData ::= SEQUENCE
    {
     patternCoordSyncPoint.x         INTEGER,
     patternOptions.x                INTEGER  (1..255)
    }

END
```


© 2023 AASHTO / ITE / NEMA

# Section 7
# SAE/NTCIP Object Definitions

This section is the MIB content forming the object definitions that relate directly to the data set defined in SAE J2735 to support the Connected Vehicle interface. The MIB content is provided, with permission from SAE, so users of NTCIP 1202 can correctly reference the correct object definitions in the NTCIP 1217 MIB.

To review the full description and correct use of the corresponding SAE data elements, please refer to SAE J2735.
.

## 7.1 MIB Header

```
--*****************************************************************
-- Filename:      1217v0135e.MIB
-- Date:          September 18, 2023
-- Description:   NTCIP 1202 v03, Amendment B. This MIB is used in
                  conjunction with SAE data elements
--*****************************************************************

NTCIP1217-v01 DEFINITIONS ::= BEGIN

-- the following OBJECT IDENTIFIERS are used in the SAENTCIP MIB:

IMPORTS
    OBJECT-TYPE
       FROM RFC-1212
    DisplayString, ifIndex
       FROM RFC1213-MIB
    channelNumber, signalGroupEntryNumber
       FROM NTCIP1202-v03
    devices, OerString
       FROM NTCIP8004v02;

saeNtcip OBJECT IDENTIFIER ::= { devices 17 }

--

MapActivationCode ::= OCTET STRING (SIZE(3))

-- The MapActivationCode consists of those parameters required to activate
-- a MAP Plan message in an ASC. It is defined as an OCTET STRING containing
-- the OER-encoding of the following ASN.1 structure.

-- mapActivationCodeStructure ::= SEQUENCE {
-- mapPlanIndex INTEGER (1..8),
-- mapPlanCRC OCTET STRING (SIZE (2)) }
--
-- mapPlanIndex (8 bits) shall indicate the mapPlanIndex requested.
--
```

© 2023 AASHTO / ITE / NEMA 

```
-- mapPlanCRC (16 bits) shall indicate the mapPlanCRC of the requested
-- mapPlanIndex.
```

## 7.2 Signal Phase and Timing

```
spat OBJECT IDENTIFIER
::= { saeNtcip 1 }

-- This defines a node for supporting signal phase and timing objects for a
connected vehicle environment.
```

### 7.2.1 Intersection Status

```
spatStatus   OBJECT-TYPE
      SYNTAX   INTEGER (0..65535)
      ACCESS   read-only
      STATUS   deprecated
      DESCRIPTION "<Definition> For NTCIP 1202 user clarification, if a mode
            is enabled or active, the associated bit shall be set to (1). The
            definition of the term 'recent' is defined by the system in use.
            Bit 0 is equal to Bit 0 of the BIT STRING of
            DE_IntersectionStatusObject, Bit 1 is equal to Bit 1, etc.
      Bit 0: Enabled when unitControlStatus is remoteManualControl (9) or
            localManualControl (10)
      Bit 1: Enabled when Bit 4: Stop Time in unitAlarmStatus2 is TRUE
      Bit 2: Enabled when unitFlashStatus is other (1), faultMonitor (5) or
            mmu (6)
      Bit 3: Enabled when the preemptState for any preempt is any value other
            than other (1), notActive (2), or notActiveWithCall (3).
      Bit 4: Enabled if the CU is servicing a signal priority request.
      Bit 5: Enabled if the CU is operating in fixedTime mode. This bit and
            bit 6 are mutually exclusive.
      Bit 6: Enabled if the CU is operating in an actuated mode. This bit and
            bit 5 are mutually exclusive.
      Bit 7: Enabled if the unitFlashStatus is automatic (3), localManual (4)
            or in startup (7)
      Bit 8: Controller failure or failure in operation.
      Bit 9: Reserved
      Bit 10: Enabled if a spatMapActivationCode value has changed within the
            previous two coordination cycles.
      Bit 11: Enabled if the current cycle is the first cycle that a new set
            of enabledLanesBits is used.
      Bit 12: Enabled if the mapActivatePlanError is any value other than
            none (2).
      Bit 13: Enabled if any spatPortStatus object is any value other than
            normal (3).
      <Object Identifier> 1.3.6.1.4.1.1206.4.2.17.1.1"
      REFERENCE "SAE J2735 DE_IntersectionStatusObject"
::= { spat 1 }
```

### 7.2.2 Maximum SPaT Speed Advisories

```
maxAdvisorySpeeds   OBJECT-TYPE
      SYNTAX   INTEGER(0..16)
      ACCESS   read-only
      STATUS   deprecated
```

 © 2023 AASHTO / ITE / NEMA

```
      DESCRIPTION "<Definition> This object contains the maximum number of
            movement speed advisory entries this CU supports. This object
            indicates the maximum rows which shall appear in the
            advisorySpeedTable object.
      <Object Identifier> 1.3.6.1.4.1.1206.4.2.17.1.2
      <Unit> advisory"
::= { spat 2 }
```

#### 7.2.3 SPaT Speed Advisories Table

```
advisorySpeedTable   OBJECT-TYPE
      SYNTAX   SEQUENCE OF AdvisorySpeedEntry
      ACCESS   not-accessible
      STATUS   deprecated
      DESCRIPTION "<Definition> This table contains speed advisories for a
            specific movement at a signalized intersection. The number of
            rows in this table is equal to the maxAdvisorySpeeds object.
      <TableType> static
      <Object Identifier> 1.3.6.1.4.1.1206.4.2.17.1.3"
::= { spat 3 }

advisorySpeedEntry   OBJECT-TYPE
      SYNTAX   AdvisorySpeedEntry
      ACCESS   not-accessible
      STATUS   deprecated
      DESCRIPTION "<Definition> Speed advisory information for a specific
            movement at a signalized intersection.
      <Object Identifier> 1.3.6.1.4.1.1206.4.2.17.1.3.1"
      INDEX  { channelNumber, advisorySpeedIndex }
::= { advisorySpeedTable 1 }

AdvisorySpeedEntry::= SEQUENCE {
      advisorySpeedIndex      INTEGER,
      advisorySpeedType       INTEGER,
      advisorySpeedAdvice     INTEGER,
      advisorySpeedZoneLength INTEGER,
      advisorySpeedClass      INTEGER,
      advisorySpeedConfidence INTEGER   }
```

##### 7.2.3.1 SPaT Speed Advisory Index

```
advisorySpeedIndex   OBJECT-TYPE
      SYNTAX   INTEGER (1..16)
      ACCESS   read-only
      STATUS   deprecated
      DESCRIPTION "<Definition> The advisory speed index for objects in this
            row. This value shall not exceed the maxAdvisorySpeeds object
            value.
      <Object Identifier> 1.3.6.1.4.1.1206.4.2.17.1.3.1.1
      <Unit> number"
::= { advisorySpeedEntry 1 }
```

##### 7.2.3.2 SPaT Movement Advisory Speed Type

```
advisorySpeedType   OBJECT-TYPE
      SYNTAX   INTEGER { none (0),
```

© 2023 AASHTO / ITE / NEMA 

```
      greenwave (1),
      ecoDrive (2),
      transit (3) }
      ACCESS   read-write
      STATUS   deprecated
      DESCRIPTION "<Definition> For NTCIP 1202 user clarification, the type
            of speed advisory provided for this movement, such as greenwave
            or ecoDrive.
      <Object Identifier> 1.3.6.1.4.1.1206.4.2.17.1.3.1.2"
      REFERENCE "SAE J2735 DE_AdvisorySpeedType"
      DEFVAL { none }
::= { advisorySpeedEntry 2 }
```

#### 7.2.3.3 SPaT Movement Advisory Speed Advice

```
advisorySpeedAdvice   OBJECT-TYPE
      SYNTAX   INTEGER (0..500)
      ACCESS   read-write
      STATUS   deprecated
      DESCRIPTION "<Definition> For NTCIP 1202 user clarification, the
            advisory speed for this movement.
      <Object Identifier> 1.3.6.1.4.1.1206.4.2.17.1.3.1.3"
      REFERENCE "SAE J2735 DE_SpeedAdvice"
      DEFVAL { 500 }
::= { advisorySpeedEntry 3 }
```

#### 7.2.3.4 SPaT Movement Advisory Speed Zone

```
advisorySpeedZoneLength   OBJECT-TYPE
      SYNTAX   INTEGER (0..10000)
      ACCESS   read-write
      STATUS   deprecated
      DESCRIPTION "<Definition> For NTCIP 1202 user clarification, the
            distance upstream from the stopbar for which the advisory speed
            is recommended.
      <Object Identifier> 1.3.6.1.4.1.1206.4.2.17.1.3.1.4"
      REFERENCE "SAE J2735 DE_ZoneLength"
::= { advisorySpeedEntry 4 }
```

#### 7.2.3.5 SPaT Movement Advisory Speed Restriction Class

```
advisorySpeedClass   OBJECT-TYPE
      SYNTAX   INTEGER (0..255)
      ACCESS   read-write
      STATUS   deprecated
      DESCRIPTION "<Definition> For NTCIP 1202 user clarification, the
            mapUserClassId value to which the advisory speed applies to. A
            value of 0 indicates that advisory speed applies to all vehicle
            types.
      <Object Identifier> 1.3.6.1.4.1.1206.4.2.17.1.3.1.5"
      REFERENCE "SAE J2735 DE_RestrictionClassID"
      DEFVAL { 0 }
::= { advisorySpeedEntry 5 }
```

Copy Per MIB Distribution Permission © 2023 AASHTO / ITE / NEMA

#### 7.2.3.6 SPaT Movement Advisory Speed Confidence

```
advisorySpeedConfidence   OBJECT-TYPE
      SYNTAX   INTEGER {unavailable (0), -- Not Equipped or unavailable
      prec100ms (1), -- 100 meters / sec
      prec10ms (2), -- 10 meters / sec
      prec5ms (3), -- 5 meters / sec
      prec1ms (4), -- 1 meters / sec
      prec0-1ms (5), -- 0.1 meters / sec
      prec0-05ms (6), -- 0.05 meters / sec
      prec0-01ms (7) }
      ACCESS   read-write
      STATUS   deprecated
      DESCRIPTION "<Definition> For NTCIP 1202 user clarification, a
            confidence value for the advisorySpeedAdvice value.
      <Object Identifier> 1.3.6.1.4.1.1206.4.2.17.1.3.1.6"
      REFERENCE "SAE J2735 DE_SpeedConfidence"
::= { advisorySpeedEntry 6 }
```

### 7.2.4 Maximum SPaT Movement Maneuvers

```
maxMovementManeuvers   OBJECT-TYPE
      SYNTAX   INTEGER(1..16)
      ACCESS   read-only
      STATUS   deprecated
      DESCRIPTION "<Definition> This object contains the maximum number of
            maneuvers for a movement this CU supports for a channel. This
            object indicates the maximum rows which shall appear in the
            movementManeuverTable object.
      <Object Identifier> 1.3.6.1.4.1.1206.4.2.17.1.4
      <Unit> maneuver"
::= { spat 4 }
```

### 7.2.5 SPaT Movement Maneuvers Table

```
movementManeuverTable   OBJECT-TYPE
      SYNTAX   SEQUENCE OF MovementManeuverEntry
      ACCESS   not-accessible
      STATUS   deprecated
      DESCRIPTION "<Definition> This table contains the allowable maneuvers
            for a specific movement and channel at a signalized intersection.
            The number of rows in this table is equal to the
            maxMovementManeuvers object.
      <TableType> static
      <Object Identifier> 1.3.6.1.4.1.1206.4.2.17.1.5"
::= { spat 5 }

movementManeuverEntry   OBJECT-TYPE
      SYNTAX   MovementManeuverEntry
      ACCESS   not-accessible
      STATUS   deprecated
      DESCRIPTION "<Definition> Allowable maneuvers information for a
            specific movement at a signalized intersection.
      <Object Identifier> 1.3.6.1.4.1.1206.4.2.17.1.5.1"
      INDEX  { channelNumber, movementManeuverIndex }
::= { movementManeuverTable 1 }
```

© 2023 AASHTO / ITE / NEMA Copy Per MIB Distribution Permission

```
MovementManeuverEntry::= SEQUENCE {
      movementManeuverIndex               INTEGER, --deprecated
      movementManeuverId                  INTEGER, --deprecated
      movementManeuverState               INTEGER, --deprecated
      movementManeuverQueue               INTEGER, --deprecated
      movementManeuverStorage             INTEGER, --deprecated
      movementManeuverStatus              INTEGER, --deprecated
      movementManeuverQueueDetector       OCTET STRING, --deprecated
      movementManeuverPedPresence         OCTET STRING, --deprecated
      movementManeuverBicyclePresence     OCTET STRING, --deprecated
      movementManeuverGreenType           INTEGER, --deprecated
      movementManeuverGreenIncluded       OCTET STRING } --deprecated
```

#### 7.2.5.1 SPaT Movement Maneuver Number

```
movementManeuverIndex   OBJECT-TYPE
      SYNTAX   INTEGER (1..16)
      ACCESS   read-only
      STATUS   deprecated
      DESCRIPTION "<Definition> For NTCIP 1202 user clarification, a
            connection index for a lane to lane connection for the movement
            indexed to a specific channel.
      <Object Identifier> 1.3.6.1.4.1.1206.4.2.17.1.5.1.1"
::= { movementManeuverEntry 1 }
```

#### 7.2.5.2 SPaT Movement Maneuver Identifier

```
movementManeuverId   OBJECT-TYPE
      SYNTAX   INTEGER (0..255)
      ACCESS   read-write
      STATUS   deprecated
      DESCRIPTION "<Definition> This object is used to uniquely identify a
            lane to lane connection for the intersection. Can be used to
            relate SPaT data to a lane defined in the MAP messages. A value
            of 0 indicates that the row is disabled and all other values in
            the row are not valid.
      <Object Identifier> 1.3.6.1.4.1.1206.4.2.17.1.5.1.2"
      REFERENCE "SAE J2735 DF_ConnectionManeuverAssist and
            DE_LaneConnectionID"
::= { movementManeuverEntry 2 }
```

#### 7.2.5.3 SPaT Movement Maneuver State

```
movementManeuverState   OBJECT-TYPE
      SYNTAX   INTEGER (0..9)
      ACCESS   read-only
      STATUS   deprecated
      DESCRIPTION "<Definition> For NTCIP 1202 user clarification, this
            object defines the state of a specific movement maneuver (lane
            connection) at the intersection, unlike signalState, which
            defines the general state of a channel. This object value is
            determined as follows where Column A is the
            movementManeuverGreenType, Column B is the
            movementManeuverGreenIncluded, and Column C is the channel output
            for the channelNumber:
      +-----------------+-----------------+-----+-----------------+--------+
```

 © 2023 AASHTO / ITE / NEMA

| movementManeuver State | A | B | C | Notes |
|---|---|---|---|---|
| unavailable (0) | Any | Any | Unavailable | |
| 1 - See Note G | Any | Any | See Note A | |
| 2 - See Note G | flashRed (5) | 0 | Green or Red | |
| 3 - See Note G | Any | Any | Red | Note B |
| 4 - See Note G | N/A | N/A | N/A | |
| 5 - See Note G | permissive (3) | 0 | Green | |
| 5 - See Note G | protected (2) | > 0 | Not Yellow or Red | Note C |
| 6 - See Note G | protected (2) | > 0 | Not Yellow or Red | Note D |
| 6 - See Note G | protected (2) | 0 | Green | |
| 7 - See Note G | Any | Any | Yellow | Note E |
| 8 - See Note G | protected (2) | Any | Yellow | Note F |
| 9 - See Note G | flashYellow (4) | 0 | Green or Yellow | |

Note A: Not Green, Yellow or Red.
Note B: If this movement maneuver is controlled by a 4-section head or 5-section head, and the signal indication is 'Red', then this movement maneuver is also considered 'Red'.
Note C: If one or more of the octets in movementManeuverGreenIncluded is NOT 'Red' or is Dark.
Note D: If all octets in movementManeuverGreenIncluded are 'Red'.
Note E: Only if the preceding movementManeuverState was permissive-movement-allowed.
Note F: Only if the preceding movementManeuverState was protected-movement-allowed.
Note G: The definition of the value can be found in SAE J2735 DE_MovementPhaseState.

For example, the object value is '6' if the movementManeuverGreenType is protected (2), and all octets in movementManeuverGreenIncluded (each representing a channelNumber) are 'Red'; OR if the movementManeuverGreenType is protected (2) and the movementManeuverGreenIncluded is 00.
If the movementManeuverTable is used, this object may be exchanged between the ASC and the CV Roadside Process in lieu of the signalState object.
<Object Identifier> 1.3.6.1.4.1.1206.4.2.17.1.5.1.3"
REFERENCE "SAE J2735 DE_MovementPhaseState"
::= { movementManeuverEntry 3 }

#### 7.2.5.4 SPaT Movement Queue

```
movementManeuverQueue   OBJECT-TYPE
      SYNTAX   INTEGER (0..10000)
      ACCESS   read-only
      STATUS   deprecated
      DESCRIPTION "<Definition> For NTCIP 1202 user clarification, the
            distance from the stop line at the intersection for this movement
            to the back edge of the last vehicle in the queue.
      <Object Identifier> 1.3.6.1.4.1.1206.4.2.17.1.5.1.4"
      REFERENCE "SAE J2735 DF_ConnectionManeuverAssist and DE_ZoneLength"
      DEFVAL { 0 }
::= { movementManeuverEntry 4 }
```

© 2023 AASHTO / ITE / NEMA Copy Per MIB Distribution Permission

#### 7.2.5.5 SPaT Movement Storage

```
movementManeuverStorage   OBJECT-TYPE
      SYNTAX   INTEGER (0..10000)
      ACCESS   read-only
      STATUS   deprecated
      DESCRIPTION "<Definition> For NTCIP 1202 user clarification, the
            distance with a high probability for successfully executing the
            connecting maneuver between the approach lane and the egress lane
            during the current cycle.
      <Object Identifier> 1.3.6.1.4.1.1206.4.2.17.1.5.1.5"
      REFERENCE "SAE J2735 DF_ConnectionManeuverAssist and DE_ZoneLength"
      DEFVAL { 0 }
::= { movementManeuverEntry 5 }
```

#### 7.2.5.6 SPaT Movement Assist Status

```
movementManeuverStatus   OBJECT-TYPE
      SYNTAX   INTEGER (0..255)
      ACCESS   read-only
      STATUS   deprecated
      DESCRIPTION "<Definition> For NTCIP 1202 user clarification, this
            object defines the options for traveler connections through an
            intersection.
            Bit 7:      Reserved
            Bit 6:      Reserved
            Bit 5:      Reserved
            Bit 4:      Reserved
            Bit 3:      Reserved
            Bit 2:      Reserved
            Bit 1:      Status bit set to TRUE (1) if ANY pedestrians or
            bicyclists are detected in a conflicting movement. Set to FALSE
            (0) if there is a high certainty no pedestrians or bicyclists are
            present.
            Bit 0:      Set to TRUE (1) if vehicles for this movement
            maneuver have to stop on the stop-line and not enter the
            intersection.
            A SET of a 'reserved' bit of Bit 1 to a value other than zero (0)
            shall return a badValue(3) error.
      <Object Identifier> 1.3.6.1.4.1.1206.4.2.17.1.5.1.6"
      REFERENCE "SAE J2735 DE_WaitOnStopline and DE_PedestrianBicycleDetect"
::= { movementManeuverEntry 6 }
```

#### 7.2.5.7 SPaT Movement Queue Detector

```
movementManeuverQueueDetector   OBJECT-TYPE
      SYNTAX   OCTET STRING
      ACCESS   read-write
      STATUS   deprecated
      DESCRIPTION "<Definition> Each octet in this octet string represents a
            vehicle detector number (vehicleDetectorNumber) in the
            vehicleDetectorTable that provides the data to determine
            movementManeuverQueue. A value of 00 indicates that no additional
            vehicle detectors follow in the octet string.
      <Object Identifier> 1.3.6.1.4.1.1206.4.2.17.1.5.1.7"
::= { movementManeuverEntry 7 }
```

 © 2023 AASHTO / ITE / NEMA

#### 7.2.5.8 SPaT Movement Pedestrian Presence

```
movementManeuverPedPresence  OBJECT-TYPE
      SYNTAX   OCTET STRING
      ACCESS   read-write
      STATUS   deprecated
      DESCRIPTION "<Definition> Each octet in this octet string represents a
            pedestrian detector number (pedestrianDetectorNumber) in the
            pedestrianDetectorTable (with Bit 0 in the corresponding
            pedestrianDetectorOptions Enabled) whose detection status
            indicates a pedestrian is detected in the pedestrian crossing
            that conflicts with this movementManeuverIndex. For example, an
            octet string of 01 03 indicates that if pedestrian detector 1 or
            pedestrian detector 3 is active/ON, then the presence of a
            pedestrian has been detected that conflicts with this
            movementManeuverIndex. If a pedestrian is detected by any
            pedestrianDetectorNumber in the octet string, Bit 1 in
            movementManeuverStatus shall be SET to TRUE (1).
      <Object Identifier> 1.3.6.1.4.1.1206.4.2.17.1.5.1.8"
::= { movementManeuverEntry 8 }
```

#### 7.2.5.9 SPaT Movement Bicycle Presence

```
movementManeuverBicyclePresence   OBJECT-TYPE
      SYNTAX   OCTET STRING
      ACCESS   read-write
      STATUS   deprecated
      DESCRIPTION "<Definition> Each octet in this octet string represents a
            vehicle detector number (vehicleDetectorNumber) in the
            vehicleDetectorTable that when active/ON indicates that a
            bicyclist is detected that conflicts with this
            movementManeuverIndex. If a bicyclist is detected by any of the
            vehicleDetectorNumber in the octet string, Bit 1 in
            movementManeuverStatus shall be SET to TRUE (1). For example, an
            octet string of 02 06 indicates that if vehicle detector 2 or
            vehicle detector 6 is active/ON, then the presence of a bicyclist
            has been detected that conflicts with this movementManeuverIndex.
      <Object Identifier> 1.3.6.1.4.1.1206.4.2.17.1.5.1.9"
::= { movementManeuverEntry 9 }
```

#### 7.2.5.10 SPaT Movement Type

```
movementManeuverGreenType   OBJECT-TYPE
      SYNTAX   INTEGER { other (1),
            protected (2),
            permissive (3),
            flashYellow (4),
            flashRed (5) }
      ACCESS   read-write
      STATUS   deprecated
      DESCRIPTION "<Definition> This object defines the movementManeuverState
            for this specific movement maneuver when the channel output is
            Green. This object is used to support the generation of SPaT
            data.
            other: the allowed movement controlled by this channel is not
            defined by this standard.
```

© 2023 AASHTO / ITE / NEMA 

```
            protected: indicates that at least a portion of the green
            movement occurs in protected mode.
            permissive: indicates that the green movement occurs in
            permissive mode, that is, any turns are permitted to be made only
            after yielding to pedestrians and/or any opposing traffic.
            flashYellow: indicates that a vehicle may proceed but with
            caution after yielding to pedestrians and/or any conflicting
            traffic. Includes flashing yellow arrows.
            flashRed: indicates that a vehicle may proceed after stopping and
            yielding to pedestrians and/or any conflicting traffic. Includes
            flashing red arrows.
            Note there is a similar object called channelGreenType that
            identifies the state when the channel output is Green in general.
      <Object Identifier> 1.3.6.1.4.1.1206.4.2.17.1.5.1.10"
::= { movementManeuverEntry 10 }
```

#### 7.2.5.11 SPaT Movement Included Movements

```
movementManeuverGreenIncluded   OBJECT-TYPE
      SYNTAX   OCTET STRING
      ACCESS   read-write
      STATUS   deprecated
      DESCRIPTION "<Definition> If the movementManeuverGreenType for this
            movement maneuver is 'protected (2)', this object is used to
            indicate if and when this movement maneuver is in permissive
            mode. This object is used to support the generation of SPaT data
            and defines the movementManeuverState for this movement maneuver
            only IF the maneuverMovementGreenType is 'protected (2)'. Each
            octet in the octet string represents a conflicting or opposing
            channelNumber, which if the status for any octet in the octet
            string is NOT Channel Red or is dark, then the
            movementManeuverState for this movement maneuver is 'permissive-
            Movement-Allowed (5)' when the status for this channel is channel
            Green. Otherwise, the movementManeuverState for this movement
            maneuveris 'protected-Movement-Allowed (6)' when the status for
            this channel is channel Green.

            If movementManeuverGreenType in this row is not 'protected (2)',
            then this object value is ignored.

            It is assumed that a clearance state following a
            movementManeuverState of 'permissive movement allowed' will be a
            movementManeuverState of 'permissive clearance', and a clearance
            state following a movementManeuverState of 'protected movement
            allowed' will be a movementManeuverState of 'protected
            clearance'.

            For example, assume channelNumber 1 represents a northbound left
            turn, while channelNumber 2 is a southbound through movement. A
            channelGreenType.1 of 'protected (2)' and channelGreenIncluded.1
            of '02' indicates that if the status of channelNumber 2 is NOT
            Channel Red or is dark, then the movementManeuverState for the
            movement associated with channelNumber.1 is 'permissive-Movement-
            Allowed (5)' when the status for channelNumber.1 is channel
            Green. Otherwise, the movementManeuverState for the movement
            associated with channelNumber.1 is 'protected-Movement-Allowed
            (6)' when the status for this channel is channel Green.
```

 © 2023 AASHTO / ITE / NEMA

```
      <Object Identifier> 1.3.6.1.4.1.1206.4.2.17.1.5.1.11"
::= { movementManeuverEntry 11 }
```

#### 7.2.6 SPaT Enabled Lanes Status

```
spatEnabledLanesStatus   OBJECT-TYPE
      SYNTAX OCTET STRING
      ACCESS read-only
      STATUS mandatory
      DESCRIPTION "<Definition> Each octet within the octet string contains
            the (revocable) lane identifier that is currently enabled. Lanes
            that may not always be ACTIVE (enabled) should be identified as a
            revocable lane in the MAP message for the intersection.
      <Object Identifier> 1.3.6.1.4.1.1206.4.2.17.1.6"
      REFERENCE "SAE J2735 DF_EnabledLaneList"
::= { spat 6 }
```

#### 7.2.7 SPaT Signal Status Table

```
signalStatusTable   OBJECT-TYPE
      SYNTAX   SEQUENCE OF SignalStatusEntry
      ACCESS   not-accessible
      STATUS   deprecated
      DESCRIPTION "<Definition> This table contains signal status information
            for a signalized intersection. The number of rows in this table
            is equal to the maxChannels object.
      <TableType> static
      <Object Identifier> 1.3.6.1.4.1.1206.4.2.17.1.7"
::= { spat 7 }

signalStatusEntry   OBJECT-TYPE
      SYNTAX   SignalStatusEntry
      ACCESS   not-accessible
      STATUS   deprecated
      DESCRIPTION "<Definition> The status of a specific signal group.
      <Object Identifier> 1.3.6.1.4.1.1206.4.2.17.1.7.1"
      INDEX  { channelNumber }
::= { signalStatusTable 1 }

SignalStatusEntry::= SEQUENCE {
      signalState       INTEGER, --deprecated
      signalStateMinEndTick   INTEGER, --deprecated
      signalStateMaxEndTick   INTEGER, --deprecated
      signalStateLikelyEndTick      INTEGER, --deprecated
      signalStateTickConfidence     INTEGER, --deprecated
      signalNextTick          INTEGER } --deprecated
```

##### 7.2.7.1 SPaT Event State

```
signalState   OBJECT-TYPE
      SYNTAX   INTEGER (0..9)
      ACCESS   read-only
      STATUS   deprecated
      DESCRIPTION "<Definition> For NTCIP 1202 user clarification, this
            object value defines the movement state (e.g., permitted,
            protected) of a channel. This object is determined as follows
```

© 2023 AASHTO / ITE / NEMA Copy Per MIB Distribution Permission

```
            where Column A is the channelGreenType, Column B is the
            channelGreenIncluded, and Column C is the channel output for the
            channelNumber:
      +-----------------+-----------------+-----+-----------------+--------+
      |   signalState   |        A        |  B  |        C        | Notes  |
      +-----------------+-----------------+-----+-----------------+--------+
      | unavailable (0) |       Any       | Any |   Unavailable   |        |
      | 1 - See Note G  |       Any       | Any |   See Note A    |        |
      | 2 - See Note G  |   flashRed (5)  |  0  |   Green or Red  | Note B |
      | 3 - See Note G  |       Any       | Any |       Red       |        |
      | 4 - See Note G  |       N/A       | N/A |       N/A       |        |
      | 5 - See Note G  |  permissive (3) |  0  |      Green      |        |
      | 5 - See Note G  |  protected (2)  | > 0 |      Green      | Note C |
      | 6 - See Note G  |  protected (2)  | > 0 |      Green      | Note D |
      | 6 - See Note G  |  protected (2)  |  0  |      Green      |        |
      | 7 - See Note G  |       Any       | Any |      Yellow     | Note E |
      | 8 - See Note G  |  protected (2)  | Any |      Yellow     | Note F |
      | 9 - See Note G  | flashYellow (4) |  0  | Green or Yellow |        |
      +-----------------+-----------------+-----+-----------------+--------+

      Note A: Not Green, Yellow or Red.
      Note B: If this movement state is controlled by a 4-section head or 5-
            section head, and the signal indication is 'Red', then this
            movement maneuver is also considered 'Red'.
      Note C: If one or more of the octets in channelGreenIncluded is Not
            'Red' or is dark.
      Note D: If all octets in channelGreenIncluded are 'Red'.
      Note E: Only if the preceding signalState was permissive-movement-
            allowed.
      Note F: Only if the preceding signalState was protected-movement-
            allowed.
      Note G: The definition of the value can be found in SAE J2735
            DE_MovementPhaseState.

      For example, the object value is '6' if the channelGreenType is
            protected (2), and all octets in channelGreenIncluded (each
            representing a channelNumber) are 'Red'; OR if the
            channelGreenType is protected (2) and the channelGreenIncluded is
            00.

      Note this object provides the movement state of the channel in general,
            unlike movementManeuverState which defines the movement state of
            a specific movement maneuver (from what lane to what lane). This
            object may be exchanged between the ASC and CV Roadside Process
            if the movementManeuverState is not used.
      <Object Identifier> 1.3.6.1.4.1.1206.4.2.17.1.7.1.1"
      REFERENCE "SAE J2735 DE_MovementPhaseState"
::= { signalStatusEntry 1 }
```

#### 7.2.7.2 SPaT Signal State Minimum End Time

```
signalStateMinEndTick   OBJECT-TYPE
      SYNTAX   INTEGER (0..36001)
      ACCESS   read-only
      STATUS   deprecated
      DESCRIPTION "<Definition> The tick count representing the earliest
         future time point when the signalState is expected to change,
```

 © 2023 AASHTO / ITE / NEMA

```
         excluding unexpected events such as a preempt request. This object
         is used with the ascCurrentTick object. The value of this object
         will remain constant if the predicted future time point of the event
         does not change. Valid values range from 0 to 35999. A value of
         36000 indicates the time point is infinite or beyond the range that
         can be represented (e.g., the earliest time point is greater than
         36000 ticks). A value of 36001 indicates the time point of the event
         is undefined or unknown.

         The maximum reportable time point in the future the event will occur
         is 35999 deciseconds. To calculate this future time point consumers
         of this object subtracts signalStateMinEndTick from ascCurrentTick.
         If this result is negative add 36000 to the result (rollover).
      <Object Identifier> 1.3.6.1.4.1.1206.4.2.17.1.7.1.2
      <Unit> tick"
      DEFVAL { 36001 }
::= { signalStatusEntry 2 }
```

#### 7.2.7.3 SPaT Signal State Maximum End Time

```
signalStateMaxEndTick   OBJECT-TYPE
      SYNTAX   INTEGER (0..36001)
      ACCESS   read-only
      STATUS   deprecated
      DESCRIPTION "<Definition> The tick count representing the latest future
         time point when the signalState is expected to change, excluding
         unexpected events such as a preempt request. This object is used
         with the ascCurrentTick object. The value of this object will remain
         constant if the predicted future time point of the event does not
         change. Valid values range from 0 to 35999. A value of 36000
         indicates the time point is infinite or beyond the range that can be
         represented (e.g., the latest time point is greater than 36000
         ticks). A value of 36001 indicates the time point of the event is
         undefined or unknown.

         The maximum reportable time point in the future the event will occur
         is 35999 deciseconds. To calculate this future time point consumers
         of this object subtracts signalStateMaxEndTick from ascCurrentTick.
         If this result is negative add 36000 to the result (rollover).
      <Object Identifier> 1.3.6.1.4.1.1206.4.2.17.1.7.1.3
      <Unit> tick"
      DEFVAL { 36001 }
::= { signalStatusEntry 3 }
```

#### 7.2.7.4 SPaT Signal State Likely Time

```
signalStateLikelyEndTick   OBJECT-TYPE
      SYNTAX   INTEGER (0..36001)
      ACCESS   read-only
      STATUS   deprecated
      DESCRIPTION "<Definition> The tick count representing the most likely
         future time point when the signalState is expected to change,
         excluding unexpected events such as a preempt request. This object
         is used with the ascCurrentTick object. The value of this object
         will remain constant if the predicted future time point of the event
         does not change. Valid values range from 0 to 35999. A value of
         36000 indicates the time point is infinite or beyond the range that
```

© 2023 AASHTO / ITE / NEMA 

```
         can be represented (e.g., the likely time point is greater than
         36000 ticks). A value of 36001 indicates the time point of the event
         is undefined or unknown.

         The maximum reportable time point in the future the event will occur
         is 35999 deciseconds. To calculate this future time point consumers
         of this object subtracts signalStateLikelyEndTick from
         ascCurrentTick. If this result is negative add 36000 to the result
         (rollover).
      <Object Identifier> 1.3.6.1.4.1.1206.4.2.17.1.7.1.4
      <Unit> tick"
      DEFVAL { 36001 }
::= { signalStatusEntry 4 }
```

#### 7.2.7.5 SPaT Signal State Time Confidence

```
signalStateTickConfidence   OBJECT-TYPE
      SYNTAX   INTEGER (0..15)
      ACCESS   read-only
      STATUS   deprecated
      DESCRIPTION "<Definition> For NTCIP 1202 user clarification, the
            statistical confidence in the predicted value of the
            signalStateLikelyTick.
      <Object Identifier> 1.3.6.1.4.1.1206.4.2.17.1.7.1.5"
      REFERENCE "SAE J2735 DE_TimeIntervalConfidence"
      DEFVAL { 0 }
::= { signalStatusEntry 5 }
```

#### 7.2.7.6 SPaT Signal Next Tick

```
signalNextTick   OBJECT-TYPE
      SYNTAX   INTEGER (0..36001)
      ACCESS   read-only
      STATUS   deprecated
      DESCRIPTION "<Definition> The tick count representing the most likely
         future time point when the movement is expected to be allowed to
         move again (e.g., green), excluding unexpected events such as a
         preempt request. This object is used with the ascCurrentTick object.
         The value of this object will remain constant if the predicted
         future time point of the event does not change. Valid values range
         from 0 to 35999. A value of 36000 indicates the time point is
         infinite or beyond the range that can be represented (e.g., the time
         point is greater than 36000 ticks). A value of 36001 indicates the
         time point of the event is undefined or unknown.
         If the current signalState is not a red light or in a clearance
         interval, then a value of 36001 is used.

         The maximum reportable time point in the future the event will occur
         is 35999 deciseconds. To calculate this future time point consumers
         of this object subtracts signalNextTick from ascCurrentTick. If this
         result is negative add 36000 to the result (rollover).
      <Object Identifier> 1.3.6.1.4.1.1206.4.2.17.1.7.1.6
      <Unit> tick"
      DEFVAL { 36001 }
::= { signalStatusEntry 6 }
```

 © 2023 AASHTO / ITE / NEMA

### 7.2.8 SPaT Signal Status Block

```
signalStatusBlock OBJECT-TYPE
      SYNTAX      OerString
      ACCESS      read-write
      STATUS      deprecated
      DESCRIPTION "<Definition> An OER encoded string of the
         signalStatusTable structure as defined below. This object is used
         for uploading configuration data from the ASC in a bandwidth
         efficient manner.
         The following data is repeated for each channel. OPTIONAL fields
         shall be present only if there are changes in the data values and if
         the data is supported by the implementation. The OPTIONAL fields
         shall be omitted for any data that has not changed from a previously
         transmitted object or not supported by the implementation.

         signalStatus ::= SEQUENCE {
            ascCurrentTick.0,             -- @NTCIP1202-v03, Bytes 1 & 2
            channelData       SEQUENCE OF channelSignalData OPTIONAL
         }

         channelSignalData ::== SEQUENCE {
            channelNumber.x               -- 1 BYTE @NTCIP1202-v03
            signalStatusBitMask.x         -- 1 BYTE
            signalState.x                 OPTIONAL, -- 1 BYTE @NTCIP1202-v03
            signalStateMinEndTick.x       OPTIONAL, -- 2 BYTES @NTCIP1202-v03
            signalStateMaxEndTick.x       OPTIONAL, -- 2 BYTES @NTCIP1202-v03
            signalStateLikelyEndTick.x    OPTIONAL, -- 2 BYTES @NTCIP1202-v03
            signalStateTickConfidence.x   OPTIONAL, -- 1 BYTE @NTCIP1202-v03
            signalNextTick.x              OPTIONAL -- 2 BYTES @NTCIP1202-v03
         }

         where:

         signalStatusBitMask is a bit mask (INTEGER (0..255)) defining the
         data that follows in the OerString. When a bit=1, the data is
         included in the OerString. If a bit=0, the corresponding data is
         omitted and not in the OER string.
            Bit 7: Reserved
            Bit 6: Reserved
            Bit 5: signalNextTick - reference tick to next green state data
               is present. Values are 0..36001. 36001 means could not
               calculate or undefined.
            Bit 4: signalStateTickConfidence data for this channel is present
               (1 byte).
            Bit 3: signalStateLikelyEndTick data for this channel is present
               (2 bytes). Values are 0..36001. 36001 means could not
               calculate or undefined.
            Bit 2: signalStateMaxEndTick data for this channel is present (2
               bytes). Values are 0..36001. 36001 means could not calculate
               or undefined.
            Bit 1: signalStateMinEndTick data for this channel is present (2
               bytes). Values are 0..36001. 36001 means could not calculate
               or undefined.
            Bit 0: signalState data for this channel is present (1 byte).
         <Object Identifier> 1.3.6.1.4.1.1206.4.2.17.1.8"
::= { spat 8 }
```

© 2023 AASHTO / ITE / NEMA 

### 7.2.9 SPaT Movement Maneuver Status Block

```
movementManeuverStatusBlock OBJECT-TYPE
      SYNTAX OerString
      ACCESS read-write
      STATUS deprecated
      DESCRIPTION "<Definition> An OER encoded string of the
      movementManeuverTable structure as defined below. This object is
      used for uploading configuration data from the ASC in a bandwidth
      efficient manner.
      The following data is repeated for each channel. OPTIONAL fields
      shall be present only if there are changes in the data values and if
      the data is supported by the implementation. The OPTIONAL fields
      shall be omitted for any data that has not changed from a previously
      transmitted object or not supported by the implementation.

      movementManeuverStatus ::= SEQUENCE {
      ascCurrentTick.0, -- @NTCIP1202-v03, Bytes 1 & 2
      movementManeuverData SEQUENCE OF movementManeuverStatusData
      OPTIONAL
      }
      movementManeuverStatusData ::== SEQUENCE {
      channelNumber.x -- 1 BYTE @NTCIP1202-v03
      movementManeuverCount.x -- 1 BYTE
      movementManeuverIndex.x.y -- 1 BYTE @NTCIP1202-v03
      movementManeuverBitMask.x.y -- 1 BYTE
      movementManeuverState.x.y OPTIONAL, -- 1 BYTE @NTCIP1202-v03

      movementManeuverQueue.x.y OPTIONAL, -- 2 BYTES @NTCIP1202-v03
      movementManeuverStorage.x.y OPTIONAL, -- 2 BYTES @NTCIP1202-v03
      waitOnStop.x.y OPTIONAL, -- 1 BYTE
      pedBicycleDetect.x.y OPTIONAL, -- 1 BYTE
      }

      where:
      movementManeuverCount is an INTEGER (0..255) defining the number of
      movement maneuver that follows for this channel; and
      movementManeuverBitMask is a bit mask (INTEGER (0..255)) defining
      the data that follows in the OerString. When a bit=1, the data is
      included in the OerString. If a bit=0, the corresponding data is
      omitted and not in the OER string.
      Bit 7: Reserved
      Bit 6: Reserved
      Bit 5: Reserved
      Bit 4: pedBicycleDetect data for this channel and
      movementManeuverIndex is present (1 byte).
      Bit 3: waitOnStop data for this channel and movementManeuverIndex
      is present (1 byte).
      Bit 2: movementManeuverStorage data for this channel and
      movementManeuverIndex is present (2 bytes).
      Bit 1: movementManeuverQueue data for this channel and
      movementManeuverIndex is present (2 bytes).
      Bit 0: movementManeuverState data for this channel and
      movementManeuverIndex is present (1 byte).
      waitOnStop is (INTEGER (0..255)) and is equal to 1 if vehicles for
      this movement maneuver have to stop on the stop-line and not enter
```

 © 2023 AASHTO / ITE / NEMA

```
      the intersection, and equal to 2 if the vehicles do not.
      pedBicycleDetect is (INTEGER (0..255)) and is equal to 1 if ANY
      pedestrians or bicyclists are detected in a conflicting movement,
      and is equal to 2 if there is a high certainty no pedestrians or
      bicyclists are present.
      <Object Identifier> 1.3.6.1.4.1.1206.4.2.17.1.9"
      ::= { spat 9 }
```

### 7.2.10 Intersection Status V2

```
spatStatus2   OBJECT-TYPE
      SYNTAX   INTEGER (0..65535)
      ACCESS   read-only
      STATUS   mandatory
      DESCRIPTION "<Definition> For NTCIP 1202 user clarification, if a mode
            is enabled or active, the associated bit shall be set to (1). Bit
            0 is equal to Bit 0 of the BIT STRING of
            DE_IntersectionStatusObject, Bit 1 is equal to Bit 1, etc.
      Bit 0: Manual Control. Enabled when unitControlStatus is
            remoteManualControl (9) or localManualControl (10).
      Bit 1: Stop Time. Enabled when Bit 4: Stop Time in unitAlarmStatus2 is
            TRUE.
      Bit 2: Failure Flash. Enabled when unitFlashStatus is localManual (4),
            faultMonitor (5), or mmu (6). This bit may also be enabled if the
            preemptState is other (1) and indeterminate.
      Bit 3: Preempt. Enabled when the preemptState for any preempt is any
            value other than notActive (2) or notActiveWithCall (3). This bit
            may also be enabled if the preemptState is other (1) and
            determinate.
      Bit 4: Signal Priority. Enabled when the
            priorityStrategyRequestStatusInCO for any priority request is a
            value of requestQueued (2), or activeProcessing (4).
      Bit 5: Fixed Time. Enabled if the CU is operating in fixedTime mode.
            This bit and Bit 6 cannot both be simultaneously active.
      Bit 6: Traffic Dependent. Enabled if the CU is operating in an actuated
            mode. This bit and Bit 5 cannot both be simultaneously active.
      Bit 7: Standby. Enabled if the unitFlashStatus is automatic (3),
            startup (7), or preempt (8).
      Bit 8: Failure Mode. Controller failure or failure in operation.
      Bit 9: Reserved. SET to 0.
      Bit 10: Reserved. SET to 1.
      Bit 11: Reserved. SET to 1.
      Bit 12: Invalid MAP. Enabled if spatOptions Bit 2 is FALSE, or the
            spatPortOptions Bit 2 is FALSE.
      Bit 13: Invalid SPaT. Enabled if any spatPortStatus object is any value
            other than normal (3), if spatOptions Bit 1 is FALSE, or the
            spatPortOptions Bit 1 is FALSE.
      Bits 14-15: Reserved

      The default bit value for Bits 10 and 11 is enabled (1). The default
            bit value for all other Bits is disabled (0).
      See Annex F.3.3.4 for additional guidance.
      <Object Identifier> 1.3.6.1.4.1.1206.4.2.17.1.10
      <Object Type> S"
      REFERENCE "SAE J2735 DE_IntersectionStatusObject"
::= { spat 10 }
```

© 2023 AASHTO / ITE / NEMA 

#### 7.2.11 Maximum Movement Events

```
maxMovementEvents   OBJECT-TYPE
      SYNTAX   INTEGER(2..16)
      ACCESS   read-only
      STATUS   mandatory
      DESCRIPTION "<Definition> This object contains the maximum number of
            movement events for each signal group this CU supports. The first
            movement event represents the current interval, the second
            movement event represents the next (future) movement event to
            follow the current interval.
      <Object Identifier> 1.3.6.1.4.1.1206.4.2.17.1.11
      <Object Type> S
      <Unit> movements"
::= { spat 11 }
```

#### 7.2.12 SPaT Signal Status Table V2

```
signalStatusTable2   OBJECT-TYPE
      SYNTAX   SEQUENCE OF SignalStatusEntry2
      ACCESS   not-accessible
      STATUS   mandatory
      DESCRIPTION "<Definition> This table contains signal status information
            for signalized intersections controlled by the CU.
      <TableType> static
      <Object Identifier> 1.3.6.1.4.1.1206.4.2.17.1.12"
::= { spat 12 }

signalStatusEntry2   OBJECT-TYPE
      SYNTAX   SignalStatusEntry2
      ACCESS   not-accessible
      STATUS   mandatory
      DESCRIPTION "<Definition> The status of a specific signal group.
      <Object Identifier> 1.3.6.1.4.1.1206.4.2.17.1.12.1"
      INDEX  { signalGroupEntryNumber, movementEventNumber }
::= { signalStatusTable2 1 }

SignalStatusEntry2::= SEQUENCE {
      movementEventNumber           INTEGER,
      signalState2                  INTEGER,
      signalStateMinEndTick2        INTEGER,
      signalStateMaxEndTick2        INTEGER,
      signalStateLikelyEndTick2     INTEGER,
      signalStateTickConfidence2    INTEGER,
      signalStateNextTick2          INTEGER,
      signalStateStartTick          INTEGER }
```

##### 7.2.12.1 Movement Event Number

```
movementEventNumber  OBJECT-TYPE
      SYNTAX   INTEGER (1..16)
      ACCESS   read-only
      STATUS   mandatory
      DESCRIPTION "<Definition> The movement index for objects in this row.
            This value shall not exceed the maxMovementEvents object value.
            Index value 1 contains the value for the current interval and
            Index value 2 contains the value for the next interval.
```

 © 2023 AASHTO / ITE / NEMA

```
      <Object Identifier> 1.3.6.1.4.1.1206.4.2.17.1.12.1.1
      <Object Type> S
      <Unit> number"
::= { signalStatusEntry2 1 }
```

#### 7.2.12.2 SPaT Event State

```
signalState2   OBJECT-TYPE
      SYNTAX      INTEGER { other (1),
                  unavailable (2),
                  dark (3),
                  stopThenProceed (4),
                  stopAndRemain (5),
                  preMovement (6),
                  permissiveMovementAllowed (7),
                  protectedMovementAllowed (8),
                  permissiveClearance (9),
                  protectedClearance (10),
                  cautionConflictingTraffic (11) }
      ACCESS   read-only
      STATUS   mandatory
      DESCRIPTION "<Definition> This object value defines the movement phase
         state for a signal group ID. movementEventNumber.1 indicates the
         current movement phase state, and movementEventNumber.2 indicates
         the next movement phase state. If the movement phase state is
         unknown, a value of 2 is used.

         The movement phase state is determined by agencySignalStateValue.

         See Annex F.3.3.5 for additional guidance.
      <Object Identifier> 1.3.6.1.4.1.1206.4.2.17.1.12.1.2
      <Object Type> S"
      REFERENCE "SAE J2735 DE_MovementPhaseState"
::= { signalStatusEntry2 2 }
```

#### 7.2.12.3 SPaT Signal State Minimum End Time V2

```
signalStateMinEndTick2   OBJECT-TYPE
      SYNTAX   INTEGER (0..36111)
      ACCESS   read-only
      STATUS   mandatory
      DESCRIPTION "<Definition> The tick count representing the earliest
         future time point when the signalState is expected to change,
         excluding unexpected events such as a preempt request. This object
         is used with the ascCurrentTick2 object. The value of this object
         will remain constant if the predicted future time point of the event
         does not change. Values from 0 to 35999 cover one hour. Values from
         36000 to 36009 are used when a leap second occurs. Values from 36010
         to 36110 are reserved for future use. A value of 36111 indicates the
         time point of the event is undefined or unknown.

         If signalStateMinEndTick2 is greater than ascCurrentTick2 then the
         end time is in the current hour. If signalStateMinEndTick2 is less
         than ascCurrentTick2 then the time is in the next hour.

         See Annex F.3.3.6.2 for additional guidance.
      <Object Identifier> 1.3.6.1.4.1.1206.4.2.17.1.12.1.3
```

© 2023 AASHTO / ITE / NEMA 

```
      <Object Type> S
      <Unit> tick"
      REFERENCE "SAE J2735 DE_TimeMark"
      DEFVAL { 36111 }
::= { signalStatusEntry2 3 }
```

#### 7.2.12.4 SPaT Signal State Maximum End Time V2

```
signalStateMaxEndTick2   OBJECT-TYPE
      SYNTAX   INTEGER (0..36111)
      ACCESS   read-only
      STATUS   mandatory
      DESCRIPTION "<Definition> The tick count representing the latest future
         time point when the signalState is expected to change, excluding
         unexpected events such as a preempt request. This object is used
         with the ascCurrentTick2 object. The value of this object will
         remain constant if the predicted future time point of the event does
         not change. Values from 0 to 35999 cover one hour. Values from 36000
         to 36009 are used when a leap second occurs. Values from 36010 to
         36110 are reserved for future use. A value of 36111 indicates the
         time point of the event is undefined or unknown.

         If signalStateMaxEndTick2 is greater than ascCurrentTick2 then the
         end time is in the current hour. If signalStateMaxEndTick2 is less
         than ascCurrentTick2 then the time is in the next hour.

         See Annex F.3.3.6.3 for additional guidance.
      <Object Identifier> 1.3.6.1.4.1.1206.4.2.17.1.12.1.4
      <Object Type> S
      <Unit> tick"
      REFERENCE "SAE J2735 DE_TimeMark"
      DEFVAL { 36111 }
::= { signalStatusEntry2 4 }
```

#### 7.2.12.5 SPaT Signal State Likely Time V2

```
signalStateLikelyEndTick2   OBJECT-TYPE
      SYNTAX   INTEGER (0..36111)
      ACCESS   read-only
      STATUS   mandatory
      DESCRIPTION "<Definition> The tick count representing the most likely
         future time point when the signalState is expected to change,
         excluding unexpected events such as a preempt request. This object
         is used with the ascCurrentTick2 object. The value of this object
         will remain constant if the predicted future time point of the event
         does not change. Values from 0 to 35999 cover one hour. Values from
         36000 to 36009 are used when a leap second occurs. Values from 36010
         to 36110 are reserved for future use. A value of 36111 indicates the
         time point of the event is undefined or unknown.

         If signalStateLikelyEndTick2 is greater than ascCurrentTick2 then
         the end time is in the current hour. If signalStateLikelyEndTick2 is
         less than ascCurrentTick2 then the time is in the next hour.

         See Annex F.3.3.6.4 for additional guidance.
      <Object Identifier> 1.3.6.1.4.1.1206.4.2.17.1.12.1.5
      <Object Type> S
```

 © 2023 AASHTO / ITE / NEMA

```
      <Unit> tick"
      REFERENCE "SAE J2735 DE_TimeMark"
      DEFVAL { 36111 }
::= { signalStatusEntry2 5 }
```

#### 7.2.12.6 SPaT Signal State Time Confidence

```
signalStateTickConfidence2   OBJECT-TYPE
      SYNTAX   INTEGER (0..15)
      ACCESS   read-only
      STATUS   mandatory
      DESCRIPTION "<Definition> For NTCIP 1202 user clarification, the
         statistical confidence in the predicted value of the
         signalStateLikelyEndTick2.

         See Annex F.3.3.6.5 for additional guidance.
      <Object Identifier> 1.3.6.1.4.1.1206.4.2.17.1.12.1.6
      <Object Type> S"
      REFERENCE "SAE J2735 DE_TimeIntervalConfidence"
      DEFVAL { 0 }
::= { signalStatusEntry2 6 }
```

#### 7.2.12.7 SPaT Signal Next Tick V2

```
signalStateNextTick2   OBJECT-TYPE
      SYNTAX   INTEGER (0..36111)
      ACCESS   read-only
      STATUS   mandatory
      DESCRIPTION "<Definition> The tick count representing the most likely
         future time point when the movement is expected to be allowed to
         move again (e.g., green), excluding unexpected events such as a
         preempt request. This object is used with the ascCurrentTick2
         object. The value of this object will remain constant if the
         predicted future time point of the event does not change. Values
         from 0 to 35999 cover one hour. Values from 36000 to 36009 are used
         when a leap second occurs. Values from 36010 to 36110 are reserved
         for future use. A value of 36111 indicates the time point of the
         event is undefined or unknown.

         If signalStateNextTick2 is greater than ascCurrentTick2 then the
         next time is in the current hour. If signalStateNextTick2 is less
         than ascCurrentTick2 then the time is in the next hour.

         See Annex F.3.3.6.6 for additional guidance.
      <Object Identifier> 1.3.6.1.4.1.1206.4.2.17.1.12.1.7
      <Object Type> S
      <Unit> tick"
      REFERENCE "SAE J2735 DE_TimeMark"
      DEFVAL { 36111 }
::= { signalStatusEntry2 7 }
```

#### 7.2.12.8 SPaT Signal Start Tick

```
signalStateStartTick   OBJECT-TYPE
      SYNTAX   INTEGER (0..36111)
      ACCESS   read-only
```

© 2023 AASHTO / ITE / NEMA Copy Per MIB Distribution Permission

```
      STATUS   mandatory
      DESCRIPTION "<Definition> The tick count representing the start time of
         the next (future) movement state to follow the current movement
         state for a signal group. This object is used with the
         ascCurrentTick2 object. The value of this object will remain
         constant if the predicted future time point of the event does not
         change. Values from 0 to 35999 cover one hour. Values from 36000 to
         36009 are used when a leap second occurs. Values from 36010 to 36110
         are reserved for future use. A value of 36111 indicates the time
         point of the event is undefined or unknown.

         If signalStateStartTick is greater than ascCurrentTick2 then the
         start time of the next movement state is in the current hour. If
         signalStateStartTick is less than ascCurrentTick2 then the time is
         in the next hour.

         See Annex F.3.3.6.7 for additional guidance.
      <Object Identifier> 1.3.6.1.4.1.1206.4.2.17.1.12.1.8
      <Object Type> S
      <Unit> tick"
      REFERENCE "SAE J2735 DE_TimeMark"
      DEFVAL { 36111 }
::= { signalStatusEntry2 8 }
```

### 7.2.13 Maximum SPaT Speed Advisories

```
maxAdvisorySpeeds2   OBJECT-TYPE
      SYNTAX   INTEGER(1..255)
      ACCESS   read-only
      STATUS   mandatory
      DESCRIPTION "<Definition> This object contains the maximum number of
            movement speed advisory entries this CU supports. This object
            indicates the maximum rows which shall appear in the
            advisorySpeedTable2 object.
      <Object Identifier> 1.3.6.1.4.1.1206.4.2.17.1.13
      <Object Type> S
      <Unit> advisory"
::= { spat 13 }
```

### 7.2.14 SPaT Speed Advisories Table 2

```
advisorySpeedTable2   OBJECT-TYPE
      SYNTAX   SEQUENCE OF AdvisorySpeedEntry2
      ACCESS   not-accessible
      STATUS   mandatory
      DESCRIPTION "<Definition> This table contains speed advisories for
            signalized intersections controlled by this CU. The number of
            rows in this table is equal to the maxAdvisorySpeeds2 object.
      <TableType> static
      <Object Identifier> 1.3.6.1.4.1.1206.4.2.17.1.14"
::= { spat 14 }

advisorySpeedEntry2   OBJECT-TYPE
      SYNTAX   AdvisorySpeedEntry2
      ACCESS   not-accessible
      STATUS   mandatory
```

 © 2023 AASHTO / ITE / NEMA

```
      DESCRIPTION "<Definition> Speed advisory information for a signal
            group.
      <Object Identifier> 1.3.6.1.4.1.1206.4.2.17.1.14.1"
      INDEX  { advisorySpeedIndex2 }
::= { advisorySpeedTable2 1 }

AdvisorySpeedEntry2::= SEQUENCE {
      advisorySpeedIndex2                 INTEGER,
      advisorySpeedSignalGroupEntryNumber INTEGER,
      advisorySpeedType2                  INTEGER,
      advisorySpeedAdvice2                INTEGER,
      advisorySpeedZoneLength2            INTEGER,
      advisorySpeedClass2                 INTEGER  }
```

#### 7.2.14.1 SPaT Speed Advisory Index 2

```
advisorySpeedIndex2   OBJECT-TYPE
      SYNTAX   INTEGER (1..255)
      ACCESS   read-only
      STATUS   mandatory
      DESCRIPTION "<Definition> The advisory speed index for objects in this
            row. This value shall not exceed the maxAdvisorySpeeds2 object
            value.
      <Object Identifier> 1.3.6.1.4.1.1206.4.2.17.1.14.1.1
      <Object Type> S
      <Unit> number"
::= { advisorySpeedEntry2 1 }
```

#### 7.2.14.2 SPaT Advisory Signal Group 2

```
advisorySpeedSignalGroupEntryNumber   OBJECT-TYPE
      SYNTAX   INTEGER (1..255)
      ACCESS   read-write
      STATUS   mandatory
      DESCRIPTION "<Definition> The signalGroupEntryNumber that the speed
            advisory is applicable for. A value of 0 indicates that the row
            is disabled and all other values in the row are not valid.
      <Object Identifier> 1.3.6.1.4.1.1206.4.2.17.1.14.1.2
      <Object Type> P"
::= { advisorySpeedEntry2 2 }
```

#### 7.2.14.3 SPaT Movement Advisory Speed Type 2

```
advisorySpeedType2   OBJECT-TYPE
      SYNTAX   INTEGER { none (1),
            greenwave (2),
            ecoDrive (3),
            transit (4) }
      ACCESS   read-write
      STATUS   mandatory
      DESCRIPTION "<Definition> The type of speed advisory provided for this
            movement, such as greenwave or ecoDrive. Note: The enumerations
            do not match DE_AdvisorySpeedType.
      <Object Identifier> 1.3.6.1.4.1.1206.4.2.17.1.14.1.3
      <Object Type> P"
      REFERENCE "SAE J2735 DE_AdvisorySpeedType"
```

© 2023 AASHTO / ITE / NEMA Copy Per MIB Distribution Permission

```
      DEFVAL { none }
::= { advisorySpeedEntry2 3 }
```

#### 7.2.14.4 SPaT Movement Advisory Speed Advice 2

```
advisorySpeedAdvice2   OBJECT-TYPE
      SYNTAX   INTEGER (0..500)
      ACCESS   read-write
      STATUS   mandatory
      DESCRIPTION "<Definition> The advisory speed provided by the ASC for
            this movement, in units of 0.1 meters per second. A value of 500
            indicates that speed is unavailable.
      <Object Identifier> 1.3.6.1.4.1.1206.4.2.17.1.14.1.4
      <Object Type> P
      <Unit> one-tenth of a meter per second"
      REFERENCE "SAE J2735 DE_SpeedAdvice"
      DEFVAL { 500 }
::= { advisorySpeedEntry2 4 }
```

#### 7.2.14.5 SPaT Movement Advisory Speed Zone 2

```
advisorySpeedZoneLength2   OBJECT-TYPE
      SYNTAX   INTEGER (0..10000)
      ACCESS   read-write
      STATUS   mandatory
      DESCRIPTION "<Definition> The distance, in meters, indicates the region
            upstream from the stopbar for which the advisory speed is
            recommended. A value of 0 indicates unknown and a value of 10000
            indicates distances equal to or greater than 10000.
      <Object Identifier> 1.3.6.1.4.1.1206.4.2.17.1.14.1.5
      <Object Type> P
      <Unit> meter"
      REFERENCE "SAE J2735 DE_ZoneLength"
::= { advisorySpeedEntry2 5 }
```

#### 7.2.14.6 SPaT Movement Advisory Speed Restriction Class 2

```
advisorySpeedClass2   OBJECT-TYPE
      SYNTAX   INTEGER (0..255)
      ACCESS   read-write
      STATUS   mandatory
      DESCRIPTION "<Definition> The vehicle type(s) to which the advisory
            speed applies to. The value is provided in the MAP message for
            the intersection. A value of 0 indicates that advisory speed
            applies to all vehicle types.
      <Object Identifier> 1.3.6.1.4.1.1206.4.2.17.1.14.1.6
      <Object Type> P"
      REFERENCE "SAE J2735 DE_RestrictionClassID"
      DEFVAL { 0 }
::= { advisorySpeedEntry2 6 }
```

### 7.2.15 Maximum SPaT Movement Maneuvers

```
maxMovementManeuvers2   OBJECT-TYPE
      SYNTAX   INTEGER(1..255)
      ACCESS   read-only
```

 © 2023 AASHTO / ITE / NEMA

```
      STATUS   mandatory
      DESCRIPTION "<Definition> This object contains the maximum number of
            rows which shall appear in the movementManeuverTable2 object.
      <Object Identifier> 1.3.6.1.4.1.1206.4.2.17.1.15
      <Object Type> S
      <Unit> maneuver"
::= { spat 15 }
```

#### 7.2.16 SPaT Movement Maneuvers Table V2

```
movementManeuverTable2   OBJECT-TYPE
      SYNTAX   SEQUENCE OF MovementManeuverEntry2
      ACCESS   not-accessible
      STATUS   mandatory
      DESCRIPTION "<Definition> This table contains information relevant to a
            maneuver that is related to a signal group at a signalized
            intersection. The number of rows in this table is equal to the
            maxMovementManeuvers2 object.
      <TableType> static
      <Object Identifier> 1.3.6.1.4.1.1206.4.2.17.1.16"
::= { spat 16 }

movementManeuverEntry2   OBJECT-TYPE
      SYNTAX   MovementManeuverEntry2
      ACCESS   not-accessible
      STATUS   mandatory
      DESCRIPTION "<Definition> Maneuvers information for a specific movement
            at a signalized intersection.
      <Object Identifier> 1.3.6.1.4.1.1206.4.2.17.1.16.1"
      INDEX  { movementManeuverIndex2 }
::= { movementManeuverTable2 1 }

MovementManeuverEntry2::= SEQUENCE {
      movementManeuverIndex2              INTEGER,
      movementManeuverSignalGroupEntryNumber    INTEGER,
      movementManeuverQueue2              INTEGER,
      movementManeuverStatus2             INTEGER,
      movementManeuverQueueDetector2      OCTET STRING,
      movementManeuverPedPresence2        OCTET STRING,
      movementManeuverBicyclePresence2    OCTET STRING }
```

##### 7.2.16.1 SPaT Movement Maneuver Number V2

```
movementManeuverIndex2   OBJECT-TYPE
      SYNTAX   INTEGER (1..255)
      ACCESS   read-only
      STATUS   mandatory
      DESCRIPTION "<Definition> The movement maneuver index for objects in
            this row. This value shall not exceed the maxMovementManeuvers2
            object value.
      <Object Identifier> 1.3.6.1.4.1.1206.4.2.17.1.16.1.1
      <Object Type> S"
::= { movementManeuverEntry2 1 }
```

© 2023 AASHTO / ITE / NEMA 

#### 7.2.16.2 SPaT Movement Maneuver Signal Group

```
movementManeuverSignalGroupEntryNumber   OBJECT-TYPE
      SYNTAX   INTEGER (0..255)
      ACCESS   read-write
      STATUS   mandatory
      DESCRIPTION "<Definition> The signalGroupEntryNumber that the movement
            maneuver is applicable for. A value of 0 indicates that the row
            is disabled and all other values in the row are not valid.
      <Object Identifier> 1.3.6.1.4.1.1206.4.2.17.1.16.1.2
      <Object Type> P"
      REFERENCE "SAE J2735 DE_SignalGroupID"
::= { movementManeuverEntry2 2 }
```

#### 7.2.16.3 SPaT Movement Queue V2

```
movementManeuverQueue2   OBJECT-TYPE
      SYNTAX   INTEGER (0..10000)
      ACCESS   read-only
      STATUS   mandatory
      DESCRIPTION "<Definition> The distance in meters from the stop line at
            the intersection for this movement to the back edge of the last
            vehicle in the queue as measured along the center line of the
            lane. A value of 0 indicates no queue or the queue distance is
            unknown, and 10000 represents all distance greater or equal to
            10000 meters.
      <Object Identifier> 1.3.6.1.4.1.1206.4.2.17.1.16.1.3
      <Object Type> P"
      REFERENCE "SAE J2735 DF_ConnectionManeuverAssist and DE_ZoneLength"
      DEFVAL { 0 }
::= { movementManeuverEntry2 3 }
```

#### 7.2.16.4 SPaT Movement Assist Status V2

```
movementManeuverStatus2   OBJECT-TYPE
      SYNTAX   INTEGER (0..255)
      ACCESS   read-only
      STATUS   mandatory
      DESCRIPTION "<Definition> For NTCIP 1202 user clarification, this
            object defines the options for traveler connections through an
            intersection.
            Bit 7:      Reserved
            Bit 6:      Reserved
            Bit 5:      Reserved
            Bit 4:      Reserved
            Bit 3:      Reserved
            Bit 2:      Reserved
            Bit 1:      Status bit set to TRUE (1) if ANY pedestrians or
            bicyclists are detected in a conflicting movement. Set to FALSE
            (0) if there is a high certainty no pedestrians or bicyclists are
            present. The detectors providing this information is defined by
            movementManeuverPedPresence2 and movementManeuverBicyclePresence2
            Bit 0:      Reserved
            A SET of a 'reserved' bit to a value other than zero (0) shall
            return a badValue(3) error.
      <Object Identifier> 1.3.6.1.4.1.1206.4.2.17.1.16.1.4
      <Object Type> P"
```

 © 2023 AASHTO / ITE / NEMA

```
      REFERENCE "SAE J2735 DE_PedestrianBicycleDetect"
::= { movementManeuverEntry2 4 }
```

#### 7.2.16.5 SPaT Movement Queue Detector V2

```
movementManeuverQueueDetector2   OBJECT-TYPE
      SYNTAX   OCTET STRING
      ACCESS   read-write
      STATUS   mandatory
      DESCRIPTION "<Definition> Each octet in this octet string represents a
            vehicle detector number (vehicleDetectorNumber) in the
            vehicleDetectorTable that provides the data to determine
            movementManeuverQueue2. A value of 00 indicates that no
            additional vehicle detectors follow in the octet string.
      <Object Identifier> 1.3.6.1.4.1.1206.4.2.17.1.16.1.5
      <Object Type> P"
::= { movementManeuverEntry2 5 }
```

#### 7.2.16.6 SPaT Movement Pedestrian Presence V2

```
movementManeuverPedPresence2  OBJECT-TYPE
      SYNTAX   OCTET STRING
      ACCESS   read-write
      STATUS   mandatory
      DESCRIPTION "<Definition> Each octet in this octet string represents a
            pedestrian detector number (pedestrianDetectorNumber) in the
            pedestrianDetectorTable (with Bit 0 in the corresponding
            pedestrianDetectorOptions Enabled) whose detection status
            indicates a pedestrian is detected in the pedestrian crossing
            that conflicts with this movementManeuverSignalGroupEntryNumber.
            For example, an octet string of 01 03 indicates that if
            pedestrian detector 1 or pedestrian detector 3 is active/ON, then
            the presence of a pedestrian has been detected that conflicts
            with this movementManeuverSignalGroupEntryNumber. If a pedestrian
            is detected by any pedestrianDetectorNumber in the octet string,
            Bit 1 in movementManeuverStatus2 shall be SET to TRUE (1).
      <Object Identifier> 1.3.6.1.4.1.1206.4.2.17.1.16.1.6
      <Object Type> P"
::= { movementManeuverEntry2 6 }
```

#### 7.2.16.7 SPaT Movement Bicycle Presence V2

```
movementManeuverBicyclePresence2   OBJECT-TYPE
      SYNTAX   OCTET STRING
      ACCESS   read-write
      STATUS   mandatory
      DESCRIPTION "<Definition> Each octet in this octet string represents a
            vehicle detector number (vehicleDetectorNumber) in the
            vehicleDetectorTable that when active/ON indicates that a
            bicyclist is detected that conflicts with this
            movementManeuverSignalGroupEntryNumber. If a bicyclist is
            detected by any of the  vehicleDetectorNumber in the octet
            string, Bit 1 in movementManeuverStatus2 shall be SET to TRUE
            (1). For example, an octet string of 02 06 indicates that if
            vehicle detector 2 or vehicle detector 6 is active/ON, then the
```

© 2023 AASHTO / ITE / NEMA Copy Per MIB Distribution Permission

```
            presence of a bicyclist has been detected that conflicts with
            this movementManeuverSignalGroupEntryNumber.
      <Object Identifier> 1.3.6.1.4.1.1206.4.2.17.1.16.1.7"
::= { movementManeuverEntry2 7 }
```

### 7.2.17 Road Authority Identifier

```
spatRoadAuthorityID   OBJECT-TYPE
      SYNTAX   OBJECT IDENTIFIER
      ACCESS   read-write
      STATUS   mandatory
      DESCRIPTION "<Definition> This object is the unique identifier of the
            agency for the SPaT and MAP message. This object shall be either
            a valid OBJECT IDENTIFIER or a null string.
      <Object Identifier> 1.3.6.1.4.1.1206.4.2.17.1.17
      <Object Type> P"
      REFERENCE "SAE J2735 DE_RelativeRoadAuthorityID"
::= { spat 17 }
```

### 7.2.18 SPaT Signal Status Block V2

```
signalStatusBlock2 OBJECT-TYPE
      SYNTAX      OerString
      ACCESS      read-only
      STATUS      mandatory
      DESCRIPTION "<Definition> An OER encoded string of the
         signalStatusTable2 structure as defined below. This object is used
         for uploading configuration data from the ASC in a bandwidth
         efficient manner.

         signalStatus2 ::= SEQUENCE {
            ascCurrentTick2.0,            -- @NTCIP1202-v03B, Bytes 1 & 2
            spatStatus2.0                 -- 2 BYTES @NTCIP1202-v03B
            spatEnabledLanesCount.0       -- 1 BYTE @NTCIP1202-v03B
            spatEnabledLanesStatus.0      -- n BYTES
            signalGroupEntryCount.0       -- 1 BYTE
            signalData2       SEQUENCE OF SignalStatusData2 OPTIONAL
         }

         SignalStatusData2 ::== SEQUENCE {
            signalGroupEntryNumber.y        -- 1 BYTE
            signalState2.y.x              -- 1 BYTE @NTCIP1202-v03B
            signalStateMinEndTick2.y.x    -- 2 BYTES @NTCIP1202-v03B
            signalStateMaxEndTick2.y.x    -- 2 BYTES @NTCIP1202-v03B
            signalStateNextTick2.y.x      -- 2 BYTES @NTCIP1202-v03B
            signalStateStartTick.y.x      -- 2 BYTES @NTCIP1202-v03B
            }

         where:
         n = spatEnabledLanesCount. This is the number of octets in the OCTET
               STRING of spatEnabledLanesStatus
         signalGroupEntryCount is a count of the number of
               signalGroupEntryNumber included in this object. Only
               signalGroupEntryNumbers that are active (in use) are to be
               included.
         y is the signalGroupEntryNumber in the signalGroupEntryTable
```

 © 2023 AASHTO / ITE / NEMA

```
            x is the movementEventNumber for the signalStatusTable2. Only a
                  value of 1 (current interval) and 2 (next interval) are used.

            For example, if (y = ) signalGroupEntryNumbers 1, 2, 4, 8, 13 and 16
            are included in this object, then signalGroupEntryCount.0 is equal
            to 6 and the SEQUENCE OF SignalStatusData2 is y = 1, 2, 4, 8, 13,
            and 16. x will still be 1, 2.

            Although this object theoretically allows up to 255
            signalGroupEntryNumbers, check that the number does not exceed the
            Maximum Transmission Unit (MTU) of the lower layers used.

            An example of signalStatusBlock2 is provided in Annex F.3.3.3.1.

            See Annex E.2 for the equivalent object definition for the RSU.
            Note: It is necessary that the signalGroupIntersection and
            signalGroupID objects be SET in the RSU before the
            signalStatusBlock2 is SET to the RSU.

<Object Identifier> 1.3.6.1.4.1.1206.4.2.17.1.18"
::= { spat 18 }
```

### 7.3 MAP Data

```
map OBJECT IDENTIFIER
::= { saeNtcip 2 }

-- This defines a node for supporting roadway geometry plan objects for a
connected vehicle environment.
```

#### 7.3.1 MAP Message Count

```
mapMsgCount OBJECT-TYPE
      SYNTAX INTEGER (0..127)
      ACCESS read-only
      STATUS deprecated
      DESCRIPTION "<Definition> For NTCIP 1202 user clarification, a sequence
            number that is incremented when the contents of the MAP data
            message has changed. The value after 127 is 0.
      <Object Identifier> 1.3.6.1.4.1.1206.4.2.17.2.1"
      REFERENCE "SAE J2735 DE_MsgCount"
::= { map 1 }
```

#### 7.3.2 MAP Message Time

```
mapMessageTime   OBJECT-TYPE
      SYNTAX   INTEGER (0..527040)
      ACCESS   read-write
      STATUS   deprecated
      DESCRIPTION "<Definition> For NTCIP 1202 user clarification, this
            object indicates the minute of the year the MAP data message was
            last created by the RSU.
      <Object Identifier> 1.3.6.1.4.1.1206.4.2.17.2.2"
      REFERENCE "SAE J2735 DE_MinuteOfTheYear"
      DEFVAL      { 0 }
::= { map 2 }
```

© 2023 AASHTO / ITE / NEMA Copy Per MIB Distribution Permission

### 7.3.3 Maximum Number of Lanes

```
maxLanes   OBJECT-TYPE
      SYNTAX   INTEGER(1..255)
      ACCESS   read-only
      STATUS   deprecated
      DESCRIPTION "<Definition> This object contains the maximum number of
            lane entries this CU supports. This object indicates the maximum
            rows which shall appear in the mapLaneTable object.
      <Object Identifier> 1.3.6.1.4.1.1206.4.2.17.2.3
      <Object Type> S
      <Unit> lanes"
::= { map 3 }
```

### 7.3.4 Intersection Lane Table

```
mapLaneTable   OBJECT-TYPE
      SYNTAX   SEQUENCE OF MapLaneEntry
      ACCESS   not-accessible
      STATUS   deprecated
      DESCRIPTION "<Definition> This table contains lane information for
            intersections. The number of rows in this table is equal to the
            maxLanes object.
      <TableType> static
      <Object Identifier> 1.3.6.1.4.1.1206.4.2.17.2.4"
::= { map 4 }

mapLaneEntry   OBJECT-TYPE
      SYNTAX   MapLaneEntry
      ACCESS   not-accessible
      STATUS   deprecated
      DESCRIPTION "<Definition> The parameters for a specific lane at an
            intersection.
      <Object Identifier> 1.3.6.1.4.1.1206.4.2.17.2.4.1"
      INDEX  { mapLaneIndex }
::= { mapLaneTable 1 }

MapLaneEntry::= SEQUENCE {
      mapLaneIndex            INTEGER,   --deprecated
      mapLaneIntersection     INTEGER,   --deprecated
      mapLaneNumber           INTEGER,   --deprecated
      mapLaneName             DisplayString,   --deprecated
      mapLaneDirection        INTEGER,   --deprecated
      mapLaneSharing          INTEGER,   --deprecated
      mapLaneType             INTEGER,   --deprecated
      mapLaneAttribute        INTEGER,   --deprecated
      mapLaneManeuver         INTEGER,   --deprecated
      mapLaneOverlay          OCTET STRING,   --deprecated
      mapLaneIngress          INTEGER,  --deprecated
      mapLaneEgress           INTEGER,  --deprecated
      mapLaneCRC              OCTET STRING }   --deprecated
```

#### 7.3.4.1 Lane Index

```
mapLaneIndex   OBJECT-TYPE
```

 © 2023 AASHTO / ITE / NEMA

```
      SYNTAX  INTEGER (1..255)
      ACCESS  read-only
      STATUS  deprecated
      DESCRIPTION "<Definition> The lane index of objects in this row. The
            entries in each row define the attributes of a specific lane
            (mapLaneNumber) at a referenced intersection
            (mapLaneIntersection). This value shall not exceed the maxLanes
            object value.
      <Object Identifier> 1.3.6.1.4.1.1206.4.2.17.2.4.1.1
      <Unit> lane"
::= { mapLaneEntry 1 }
```

#### 7.3.4.2 Lane Intersection

```
mapLaneIntersection   OBJECT-TYPE
      SYNTAX  INTEGER (1..255)
      ACCESS  read-write
      STATUS  deprecated
      DESCRIPTION "<Definition> The index of the intersection
            (mapIntersectionIndex) that this lane is associated with.
      <Object Identifier> 1.3.6.1.4.1.1206.4.2.17.2.4.1.2
      <Unit> lane"
::= { mapLaneEntry 2 }
```

#### 7.3.4.3 Lane Number

```
mapLaneNumber   OBJECT-TYPE
      SYNTAX  INTEGER (1..255)
      ACCESS  read-only
      STATUS  deprecated
      DESCRIPTION "<Definition> For NTCIP 1202 user clarification, the
            identifier of the lane of the referenced intersection
            (mapLaneIntersection).
      <Object Identifier> 1.3.6.1.4.1.1206.4.2.17.2.4.1.3"
      REFERENCE "SAE J2735 DF_GenericLane and DE_LaneID"
::= { mapLaneEntry 3 }
```

#### 7.3.4.4 Lane Name

```
mapLaneName   OBJECT-TYPE
      SYNTAX DisplayString (SIZE (1..63))
      ACCESS read-write
      STATUS deprecated
      DESCRIPTION "<Definition> For NTCIP 1202 user clarification, a textual
            string describing the lane.
      <Object Identifier> 1.3.6.1.4.1.1206.4.2.17.2.4.1.4"
      REFERENCE "SAE J2735 DF_GenericLane and DE_DescriptiveName"
::= { mapLaneEntry 4 }
```

#### 7.3.4.5 Lane Direction

```
mapLaneDirection   OBJECT-TYPE
      SYNTAX INTEGER (0..3)
      ACCESS read-write
      STATUS deprecated
```

© 2023 AASHTO / ITE / NEMA 

```
      DESCRIPTION "<Definition> For NTCIP 1202 user clarification, this
            object denotes the allowed direction of travel over the lane.
      <Object Identifier> 1.3.6.1.4.1.1206.4.2.17.2.4.1.5"
      REFERENCE "SAE J2735 DE_LaneDirection"
      DEFVAL { 0 }
::= { mapLaneEntry 5 }
```

#### 7.3.4.6 Lane Sharing

```
mapLaneSharing   OBJECT-TYPE
      SYNTAX INTEGER (0..1023)
      ACCESS read-write
      STATUS deprecated
      DESCRIPTION "<Definition> For NTCIP 1202 user clarification, this
            object describes other users (travel modes) with equal rights and
            access to the lane.
      <Object Identifier> 1.3.6.1.4.1.1206.4.2.17.2.4.1.6"
      REFERENCE "SAE J2735 DE_LaneSharing"
      DEFVAL { 0 }
::= { mapLaneEntry 6 }
```

#### 7.3.4.7 Lane Type

```
mapLaneType   OBJECT-TYPE
      SYNTAX   INTEGER { vehicle (0),     -- motor vehicle lanes
            crosswalk (1),    -- pedestrian crosswalk
            bikelane (2),     -- bike lane
            sidewalk (3),     -- pedestrian sidewalk path
            median (4),       -- median and channelization
            striping (5),     -- roadway marking
            trackedvehicle (6),     -- trains, trolleys, light rail
            parking (7) }     -- parking or stopping lane
      ACCESS read-write
      STATUS deprecated
      DESCRIPTION "<Definition> For NTCIP 1202 user clarification, this
            object defines the type of lane. This value is used to determine
            the meaning of the values in mapLaneAttribute.
      <Object Identifier> 1.3.6.1.4.1.1206.4.2.17.2.4.1.7"
      REFERENCE "SAE J2735 DF_LaneTypeAttributes"
      DEFVAL { vehicle }
::= { mapLaneEntry 7 }
```

#### 7.3.4.8 Lane Attribute

```
mapLaneAttribute   OBJECT-TYPE
      SYNTAX   INTEGER (0..65535)
      ACCESS read-write
      STATUS deprecated
      DESCRIPTION "<Definition> For NTCIP 1202 user clarification, if a
            specific attribute for the lane is true, the associated bit shall
            be set to (1). Bit 0 is equal to Bit 0 of the BIT STRING of the
            appropriate LaneAttribute type, Bit 1 is equal to Bit 1, etc. If
            the mapLaneType is vehicle (0), then the attribute values are
            defined by SAE J2735 DE_LaneAttributes-Vehicle.
      If the mapLaneType is crosswalk (1), then the attribute values are
            defined by SAE J2735 DE_LaneAttributes-Crosswalk.
```

 © 2023 AASHTO / ITE / NEMA

```
      If the mapLaneType is bikelane (2), then the attribute values are
            defined by SAE J2735 DE_LaneAttributes-Bike.
      If the mapLaneType is sidewalk (3), then the attribute values are
            defined by SAE J2735 DE_LaneAttributes-Sidewalk.
      If the mapLaneType is median (4), then the attribute values are defined
            by SAE J2735 DE_LaneAttributes-Barrier.
      If the mapLaneType is striping (5), then the attribute values are
            defined by SAE J2735 DE_LaneAttributes-Striping.
      If the mapLaneType is trackedvehicle(6), then the attribute values are
            defined by SAE J2735 DE_LaneAttributes-TrackedVehicle.
      If the mapLaneType is parking (7), then the attribute values are
            defined by SAE J2735 DE_LaneAttributes-ParkingLane.
      Note: Bit 0 should not be enabled as a revocable lane for mapLaneIndex
            = 255. It is reserved for spatEnabledLanesCommand.
      <Object Identifier> 1.3.6.1.4.1.1206.4.2.17.2.4.1.8"
      REFERENCE "SAE J2735 DF_LaneTypeAttributes"
::= { mapLaneEntry 8 }
```

#### 7.3.4.9 Lane Maneuver

```
mapLaneManeuver   OBJECT-TYPE
      SYNTAX INTEGER (0..4095)
      ACCESS read-write
      STATUS deprecated
      DESCRIPTION "<Definition> For NTCIP 1202 user clarification, represents
            the allowed maneuvers from this lane at the stop line. Note:
            these values may be further restricted by vehicle class, local
            regulations or other changing conditions.
      <Object Identifier> 1.3.6.1.4.1.1206.4.2.17.2.4.1.9"
      REFERENCE "SAE J2735 DE_AllowedManeuvers"
::= { mapLaneEntry 9 }
```

#### 7.3.4.10 Lane Overlay

```
mapLaneOverlay   OBJECT-TYPE
      SYNTAX OCTET STRING
      ACCESS read-write
      STATUS deprecated
      DESCRIPTION "<Definition> For NTCIP 1202 user clarification, each octet
            in this octet string represents the index of the lanes
            (mapLaneIndex) that overlay (run on top of) the spatial path of
            this lane. If there is no overlay lane, the octet shall be set to
            00.
      <Object Identifier> 1.3.6.1.4.1.1206.4.2.17.2.4.1.10"
      REFERENCE "SAE J2735 DF_OverlayLaneList"
::= { mapLaneEntry 10 }
```

#### 7.3.4.11 Lane Ingress

```
mapLaneIngress   OBJECT-TYPE
      SYNTAX INTEGER (0..15)
      ACCESS read-write
      STATUS deprecated
      DESCRIPTION "<Definition> For NTCIP 1202 user clarification, an index
            of an approach, to aid in the gross position of a traveler.
```

© 2023 AASHTO / ITE / NEMA Copy Per MIB Distribution Permission

```
            Intended when the MAP data represents lanes as a group of lanes
            and not as individual lanes.
      <Object Identifier> 1.3.6.1.4.1.1206.4.2.17.2.4.1.11"
      REFERENCE "SAE J2735 DF_GenericLane and DE_ApproachID"
      DEFVAL { 0 }
::= { mapLaneEntry 11 }
```

#### 7.3.4.12 Lane Egress

```
mapLaneEgress   OBJECT-TYPE
      SYNTAX INTEGER (0..15)
      ACCESS read-write
      STATUS deprecated
      DESCRIPTION "<Definition> For NTCIP 1202 user clarification, an index
            of an approach, to aid in the gross position of a traveler.
            Intended when the MAP data represents lanes as a group of lanes
            and not as individual lanes.
      <Object Identifier> 1.3.6.1.4.1.1206.4.2.17.2.4.1.12"
      REFERENCE "SAE J2735 DF_GenericLane and DE_ApproachID"
      DEFVAL { 0 }
::= { mapLaneEntry 12 }
```

#### 7.3.4.13 MAP Lane CRC

```
mapLaneCRC   OBJECT-TYPE
      SYNTAX OCTET STRING (SIZE(2))
      ACCESS read-only
      STATUS deprecated
      DESCRIPTION "<Definition> The mapLaneCRC is the CRC-16 (polynomial
            defined in ISO/IEC 13239:2002) of the associated OER-encoded (as
            defined in NTCIP 1102) MapLaneCRCByteStream.

           MapLaneCRCByteStream ::= SEQUENCE {
                 mapLaneIntersection.x   INTEGER(1..255),
                 mapLaneNumber.x         INTEGER(0..255),
                 mapLaneDirection.x      BITSTRING(SIZE(2)),
                 mapLaneSharing.x        BITSTRING(SIZE(10)),
                 mapLaneType.x           INTEGER(0..255),
                 mapLaneAttribute.x      BITSTRING(SIZE(16)),
                 mapLaneManeuver.x       BITSTRING(SIZE(12)),
                 mapNodePointX.x.1       INTEGER(-179999999..180000001),
                 mapNodePointY.x.1       INTEGER(-90000000..90000001),
                 mapComputedLaneXOffset.1      INTEGER(-32767..32767),
                 mapComputedLaneYOffset.1      INTEGER(-32767..32767) }

            Only the first node point of a lane is included in the construct.
            It is assumed that if all the other characteristics of the lane
            did not change, and the first node point of the lane remains the
            same, it is likely the lane path did not change. Note that one of
            the mapNodePointX.x.1/mapNodePointY.x.1 pair or
            mapComputedLaneXOffset.x.1/mapComputedLaneYOffset.x.1 pair will
            have a value of 00 00.
      <Object Identifier> 1.3.6.1.4.1.1206.4.2.17.2.4.1.13"
::= { mapLaneEntry 13 }
```

 © 2023 AASHTO / ITE / NEMA

### 7.3.5 Maximum Number of Intersections

```
maxMapIntersections   OBJECT-TYPE
      SYNTAX   INTEGER (1..64) no requirement to GET this object individually
      ACCESS   read-only
      STATUS   deprecated
      DESCRIPTION "<Definition> This object contains the maximum number of
            intersection entries this CU supports. Each entry represents an
            intersection that may be included in the MAP data stored and
            broadcasted by a RSU. This object indicates the maximum rows
            which shall appear in the mapIntersectionTable object.
      <Object Identifier> 1.3.6.1.4.1.1206.4.2.17.2.5
      <Unit> intersections"
::= { map 5 }
```

### 7.3.6 MAP Intersection Table

```
mapIntersectionTable   OBJECT-TYPE
      SYNTAX   SEQUENCE OF MapIntersectionEntry
      ACCESS   not-accessible
      STATUS   deprecated
      DESCRIPTION "<Definition> This table contains information describing an
            intersection that may be included in a MAP message, including its
            reference point. The number of rows in this table is equal to the
            maxMapIntersections object.
      <TableType> static
      <Object Identifier> 1.3.6.1.4.1.1206.4.2.17.2.6"
::= { map 6 }

mapIntersectionEntry   OBJECT-TYPE
      SYNTAX   MapIntersectionEntry
      ACCESS   not-accessible
      STATUS   deprecated
      DESCRIPTION "<Definition> Description and characteristics of an
            intersection that may be broadcasted in a MAP message.
      <Object Identifier> 1.3.6.1.4.1.1206.4.2.17.2.6.1"
      INDEX  { mapIntersectionIndex }
::= { mapIntersectionTable 1 }

MapIntersectionEntry::= SEQUENCE {
      mapIntersectionIndex          INTEGER,
      mapIntersectionId             INTEGER,
      mapIntersectionName           DisplayString,
      mapIntersectionAuthority      INTEGER,
      mapIntersectionLatitude       INTEGER,   --deprecated
      mapIntersectionLongitude      INTEGER,   --deprecated
      mapIntersectionElevation      INTEGER,   --deprecated
      mapIntersectionDefaultWidth   INTEGER,   --deprecated
      mapIntersectionMsgCount       INTEGER }   --deprecated
```

#### 7.3.6.1 MAP Intersection Index

```
mapIntersectionIndex   OBJECT-TYPE
      SYNTAX  INTEGER (1..64)
      ACCESS  read-only
      STATUS  deprecated
```

© 2023 AASHTO / ITE / NEMA 

```
      DESCRIPTION "<Definition> The index number of the intersection objects
            in this row. This value shall not exceed the maxMapIntersections
            object value.
      <Object Identifier> 1.3.6.1.4.1.1206.4.2.17.2.6.1.1
      <Object Type> S
      <Unit> node"
::= { mapIntersectionEntry 1 }
```

#### 7.3.6.2 MAP Intersection Identifier

```
mapIntersectionId  OBJECT-TYPE
      SYNTAX  INTEGER (1..65535)
      ACCESS   read-write
      STATUS   deprecated
      DESCRIPTION "<Definition> For NTCIP 1202 user clarification, an
            identifier to uniquely define an intersection within a region.
      <Object Identifier> 1.3.6.1.4.1.1206.4.2.17.2.6.1.2
      <Object Type> P"
      REFERENCE "SAE J2735 DE_IntersectionID"
::= { mapIntersectionEntry 2 }
```

#### 7.3.6.3 MAP Intersection Name

```
mapIntersectionName  OBJECT-TYPE
      SYNTAX   DisplayString (SIZE (1..63))
      ACCESS   read-write
      STATUS   deprecated
      DESCRIPTION "<Definition> For NTCIP 1202 user clarification, an textual
            string describing the intersection.
      <Object Identifier> 1.3.6.1.4.1.1206.4.2.17.2.6.1.3"
      REFERENCE "SAE J2735 DE_DescriptiveName
      <Object Type> P"
::= { mapIntersectionEntry 3 }
```

#### 7.3.6.4 MAP Authority Identifier

```
mapIntersectionAuthority  OBJECT-TYPE
      SYNTAX  INTEGER (0..65535)
      ACCESS   read-write
      STATUS   deprecated
      DESCRIPTION "<Definition> For NTCIP 1202 user clarification, a globally
            unique identifier assigned to an entity in a region (or country)
            responsible for assigning the intersectionId. The value 0 is
            reserved for testing and is SET only in the absence of a suitable
            assignment.
      <Object Identifier> 1.3.6.1.4.1.1206.4.2.17.2.6.1.4
      <Object Type> P"
      REFERENCE "SAE J2735 DE_RoadRegulatorID"
::= { mapIntersectionEntry 4 }
```

#### 7.3.6.5 MAP Intersection Latitude

```
mapIntersectionLatitude OBJECT-TYPE
      SYNTAX   INTEGER (-90000000..90000001)
      ACCESS   read-write
      STATUS   deprecated
```

 © 2023 AASHTO / ITE / NEMA

```
      DESCRIPTION "<Definition> For NTCIP 1202 user clarification, the
            latitude of the intersection's reference point.
      <Object Identifier> 1.3.6.1.4.1.1206.4.2.17.2.6.1.5"
      REFERENCE "SAE J2735 DE_Latitude"
      DEFVAL      { 90000001 }
::=   { mapIntersectionEntry 5 }
```

#### 7.3.6.6 MAP Intersection Longitude

```
mapIntersectionLongitude OBJECT-TYPE
      SYNTAX   INTEGER (-179999999..180000001)
      ACCESS   read-write
      STATUS   deprecated
      DESCRIPTION "<Definition> For NTCIP 1202 user clarification, the
            geographic longitude of the intersection's reference point.
      <Object Identifier> 1.3.6.1.4.1.1206.4.2.17.2.6.1.6"
      REFERENCE "SAE J2735 DE_Longitude"
      DEFVAL      { 180000001 }
::=   { mapIntersectionEntry 6 }
```

#### 7.3.6.7 MAP Intersection Elevation

```
mapIntersectionElevation OBJECT-TYPE
      SYNTAX   INTEGER (-4096..61439)
      ACCESS   read-write
      STATUS   deprecated
      DESCRIPTION "<Definition> For NTCIP 1202 user clarification, the
            elevation of the intersection's reference point.
      <Object Identifier> 1.3.6.1.4.1.1206.4.2.17.2.6.1.7"
      REFERENCE "SAE J2735 DE_Elevation"
      DEFVAL      { -4096 }
::=   { mapIntersectionEntry 7 }
```

#### 7.3.6.8 MAP Intersection Default Width

```
mapIntersectionDefaultWidth OBJECT-TYPE
      SYNTAX   INTEGER (0..32767)
      ACCESS   read-write
      STATUS   deprecated
      DESCRIPTION "<Definition> For NTCIP 1202 user clarification, the
            default lane width for the intersection.
      <Object Identifier> 1.3.6.1.4.1.1206.4.2.17.2.6.1.8"
      REFERENCE "SAE J2735 DE_LaneWidth"
      DEFVAL { 0 }
::= { mapIntersectionEntry 8 }
```

#### 7.3.6.9 MAP Intersection Message Count

```
mapIntersectionMsgCount OBJECT-TYPE
      SYNTAX  INTEGER (0..127)
      ACCESS  read-only
      STATUS  deprecated
      DESCRIPTION "<Definition> For NTCIP 1202 user clarification, a sequence
            number that is incremented when the contents for the intersection
            in the MAP data message has changed.
      <Object Identifier> 1.3.6.1.4.1.1206.4.2.17.2.6.1.9"
```

© 2023 AASHTO / ITE / NEMA Copy Per MIB Distribution Permission

```
      REFERENCE "SAE J2735 DF_IntersectionGeometry and DE_MsgCount"
::= { mapIntersectionEntry 9 }
```

### 7.3.7 Maximum Number of Node Points

```
maxNodePoints   OBJECT-TYPE
      SYNTAX   INTEGER(2..63)
      ACCESS   read-only
      STATUS   deprecated
      DESCRIPTION "<Definition> This object contains the maximum number of
            node point entries this CU supports. Each node point represents a
            point along the path of a lane. This object indicates the maximum
            rows which shall appear in the mapNodePointTable object.
      <Object Identifier> 1.3.6.1.4.1.1206.4.2.17.2.7
      <Unit> node"
::= { map 7 }
```

### 7.3.8 Node Point Table

```
mapNodePointTable   OBJECT-TYPE
      SYNTAX   SEQUENCE OF MapPathEntry
      ACCESS   not-accessible
      STATUS   deprecated
      DESCRIPTION "<Definition> This table contains node point information
            describing the path of a lane at an intersection. The number of
            rows in this table is equal to the maxNodePoints object.
      <TableType> static
      <Object Identifier> 1.3.6.1.4.1.1206.4.2.17.2.8"
::= { map 8 }

mapPathEntry   OBJECT-TYPE
      SYNTAX   MapPathEntry
      ACCESS   not-accessible
      STATUS   deprecated
      DESCRIPTION "<Definition> The node offsets for a specific lane at an
            intersection.
      <Object Identifier> 1.3.6.1.4.1.1206.4.2.17.2.8.1"
      INDEX  { mapLaneIndex, mapNodePointNumber }
::= { mapNodePointTable 1 }

MapPathEntry::= SEQUENCE {
      mapNodePointNumber            INTEGER,   --deprecated
      mapNodePointX                 INTEGER,   --deprecated
      mapNodePointY                 INTEGER,   --deprecated
      mapNodePointAttribute         INTEGER,   --deprecated
      mapNodeSegmentAttribute       INTEGER,   --deprecated
      mapNodePointEndAngle          INTEGER,   --deprecated
      mapNodePointCrownCenter       INTEGER,   --deprecated
      mapNodePointCrownLeft         INTEGER,   --deprecated
      mapNodePointCrownRight        INTEGER,   --deprecated
      mapNodePointAngle             INTEGER,   --deprecated
      mapNodePointWidth             INTEGER,   --deprecated
      mapNodePointElevation         INTEGER,   --deprecated
      mapNodePointSpeedLimits       OCTET STRING }   --deprecated
```

 © 2023 AASHTO / ITE / NEMA

#### 7.3.8.1 Node Point Number

```
mapNodePointNumber   OBJECT-TYPE
      SYNTAX  INTEGER (1..255)
      ACCESS  read-only
      STATUS  deprecated
      DESCRIPTION "<Definition> The node number of objects in this row. This
            value shall not exceed the maxNodePoints object value.
      <Object Identifier> 1.3.6.1.4.1.1206.4.2.17.2.8.1.1
      <Unit> node"
::= { mapPathEntry 1 }
```

#### 7.3.8.2 Node Point X

```
mapNodePointX   OBJECT-TYPE
      SYNTAX INTEGER (-179999999..180000001)
      ACCESS read-write
      STATUS deprecated
      DESCRIPTION "<Definition> For NTCIP 1202 user clarification, represents
            the X offset from the previous node OR the geographic longitude
            position, as determined by Bit 15 in mapNodePointAttribute. If
            the value is an offset, the offset is measured from the previous
            path node (defined in the previous row of this table, with the
            first path node defined in the row mapNodePointNumber = 1), in
            centimeters. For row mapNodePointNumber = 1, the offset is from
            the intersection's reference point (intersectionLongitude). The
            sequence of nodes defines the centerline of the lane. A positive
            value is to the East.

            If this object is a geographic position, the value represents the
            geographic longitude of the path node. The value 1800000001 is
            unknown.
      <Object Identifier> 1.3.6.1.4.1.1206.4.2.17.2.8.1.2"
      REFERENCE "SAE J2735 DF_NodeOffsetPointXY"
::= { mapPathEntry 2 }
```

#### 7.3.8.3 Node Point Y

```
mapNodePointY   OBJECT-TYPE
      SYNTAX INTEGER (-90000000..90000001)
      ACCESS read-write
      STATUS deprecated
      DESCRIPTION "<Definition> For NTCIP 1202 user clarification, represents
            the Y offset from the previous node OR the geographic latitude
            position, as determined by Bit 15 of the mapNodePointAttribute.
            If the value is an offset, the offset is measured from the
            previous path node (defined in the previous row of this table,
            with the first path node defined in the row mapNodePointNumber =
            1), in centimeters. For row mapNodePointNumber = 1, the offset is
            from the intersection's reference point (intersectionLatitude).
            The sequence of nodes defines the centerline of the lane. A
            positive value is to the North.

            If this object is a geographic position, the value represents the
            geographic latitude of the path node. The value 900000001 is
            unknown.
      <Object Identifier> 1.3.6.1.4.1.1206.4.2.17.2.8.1.3"
```

© 2023 AASHTO / ITE / NEMA 

```
      REFERENCE "SAE J2735 DF_NodeOffsetPointXY"
::= { mapPathEntry 3 }
```

#### 7.3.8.4 Node Point Attributes

```
mapNodePointAttribute   OBJECT-TYPE
      SYNTAX INTEGER (0..65535)
      ACCESS read-write
      STATUS deprecated
      DESCRIPTION "<Definition> For NTCIP 1202 user clarification, defines
            the attributes that pertain to the current node point. If an
            attribute is TRUE, the associated bit shall be set to (1).
      <Object Identifier> 1.3.6.1.4.1.1206.4.2.17.2.8.1.4"
      REFERENCE "SAE J2735 DF_NodeAttributeXYList"
::= { mapPathEntry 4 }
```

#### 7.3.8.5 Node Point Segment Attributes

```
mapNodeSegmentAttribute   OBJECT-TYPE
      SYNTAX INTEGER (0..65535)
      ACCESS read-write
      STATUS deprecated
      DESCRIPTION "<Definition> For NTCIP 1202 user clarification, defines
            the attributes about the current lane segment. A segment is one
            or more straight lines formed between each set of path nodes. If
            an attribute is TRUE, the associated bit shall be set to (1), and
            indicates that the attribute exists between this path node and
            the next path node (defined in the next row of the
            mapNodePointTable).
      <Object Identifier> 1.3.6.1.4.1.1206.4.2.17.2.8.1.5"
      REFERENCE "SAE J2735 DF_SegmentAttributeXYList"
::= { mapPathEntry 5 }
```

#### 7.3.8.6 Node Point End Angle

```
mapNodePointEndAngle   OBJECT-TYPE
      SYNTAX INTEGER (-151..150)
      ACCESS read-write
      STATUS deprecated
      DESCRIPTION "<Definition> For NTCIP 1202 user clarification, provides
            the final angle used in the last point of the lane path. Used to
            'cant' the stop line of the lane.
      <Object Identifier> 1.3.6.1.4.1.1206.4.2.17.2.8.1.6 "
      REFERENCE "SAE J2735 DE_DeltaAngle"
      DEFVAL { -151 }
::= { mapPathEntry 6 }
```

#### 7.3.8.7 Node Point Crown Point Center

```
mapNodePointCrownCenter   OBJECT-TYPE
      SYNTAX INTEGER (-128..127)
      ACCESS read-write
      STATUS deprecated
      DESCRIPTION "<Definition> For NTCIP 1202 user clarification, relates
            the gross tangential angle of the roadway surface with respect to
```

 © 2023 AASHTO / ITE / NEMA

```
            the local horizontal axis measured at the crown (centerline) of
            the lane at this node point.
      <Object Identifier> 1.3.6.1.4.1.1206.4.2.17.2.8.1.7"
      REFERENCE "SAE J2735 DE_RoadwayCrownAngle"
      DEFVAL { -128 }
::= { mapPathEntry 7 }
```

#### 7.3.8.8 Node Point Crown Point Left Edge

```
mapNodePointCrownLeft   OBJECT-TYPE
      SYNTAX INTEGER (-128..127)
      ACCESS read-write
      STATUS deprecated
      DESCRIPTION "<Definition> For NTCIP 1202 user clarification, relates
            the gross tangential angle of the roadway surface with respect to
            the local horizontal axis measured at the left edge of the lane
            (in the normal direction of traffic) at this node point.
      <Object Identifier> 1.3.6.1.4.1.1206.4.2.17.2.8.1.8"
      REFERENCE "SAE J2735 DE_RoadwayCrownAngle"
      DEFVAL { -128 }
::= { mapPathEntry 8 }
```

#### 7.3.8.9 Node Point Crown Point Right Edge

```
mapNodePointCrownRight   OBJECT-TYPE
      SYNTAX INTEGER (-128..127)
      ACCESS read-write
      STATUS deprecated
      DESCRIPTION "<Definition> For NTCIP 1202 user clarification, relates
            the gross tangential angle of the roadway surface with respect to
            the local horizontal axis measured at the right edge of the lane
            (in the normal direction of traffic) at this node point. The
            value 0 indicates an angle between -0.15 and +0.15 degrees. The
            value -128 shall be used for unknown. Note: SAE J2735 does not
            clearly define positive values.
      <Object Identifier> 1.3.6.1.4.1.1206.4.2.17.2.8.1.9"
      REFERENCE "SAE J2735 DE_RoadwayCrownAngle"
      DEFVAL { -128 }
::= { mapPathEntry 9 }
```

#### 7.3.8.10 Node Point Lane Angle

```
mapNodePointAngle   OBJECT-TYPE
      SYNTAX INTEGER (-180..180)
      ACCESS read-write
      STATUS deprecated
      DESCRIPTION "<Definition> For NTCIP 1202 user clarification, provides
            the angle and direction at which another lane path meets the
            current lane at the node point.
      <Object Identifier> 1.3.6.1.4.1.1206.4.2.17.2.8.1.10"
      REFERENCE "SAE J2735 DE_MergeDivergeNodeAngle"
      DEFVAL { -180 }
::= { mapPathEntry 10 }
```

© 2023 AASHTO / ITE / NEMA Copy Per MIB Distribution Permission

#### 7.3.8.11 Node Point Width

```
mapNodePointWidth   OBJECT-TYPE
      SYNTAX INTEGER (-512..511)
      ACCESS read-write
      STATUS deprecated
      DESCRIPTION "<Definition> For NTCIP 1202 user clarification, a value
            added to the current lane width at this node and from this node
            onwards. Lane widths between nodes are a linear taper between
            points. Note: SAE J2735_1603 states that zero is not allowed.
      <Object Identifier> 1.3.6.1.4.1.1206.4.2.17.2.8.1.11"
      REFERENCE "SAE J2735 DF_NodeAttributeSetXY and DE_Offset_B10"
::= { mapPathEntry 11 }
```

#### 7.3.8.12 Node Point Elevation

```
mapNodePointElevation   OBJECT-TYPE
      SYNTAX INTEGER (-512..511)
      ACCESS read-write
      STATUS deprecated
      DESCRIPTION "<Definition> For NTCIP 1202 user clarification, a value
            added to the current elevation at this node from this node
            onwards. Lane elevations between nodes are a linear taper between
            points. Note: SAE J2735_1603 states that zero is not allowed.
      <Object Identifier> 1.3.6.1.4.1.1206.4.2.17.2.8.1.12"
      REFERENCE "SAE J2735 DF_NodeAttributeSetXY and DE_Offset_B10"
::= { mapPathEntry 12 }
```

#### 7.3.8.13 Node Point Speed Limits

```
mapNodePointSpeedLimits   OBJECT-TYPE
      SYNTAX OCTET STRING
      ACCESS read-write
      STATUS deprecated
      DESCRIPTION "<Definition> For NTCIP 1202 user clarification, each octet
            within the octet string contains a mapSpeedLimitIndex (binary
            value) that is applicable at this path node. The values of the
            mapSpeedLimitIndex shall not exceed mapSpeedLimits.
      <Object Identifier> 1.3.6.1.4.1.1206.4.2.17.2.8.1.13"
      REFERENCE "SAE J2735 DF_LaneDataAttribute and DF_RegulatorySpeedLimit"
::= { mapPathEntry 13 }
```

### 7.3.9 Maximum Computed Lane

```
maxComputedLanes   OBJECT-TYPE
      SYNTAX   INTEGER(1..255)
      ACCESS   read-only
      STATUS   deprecated
      DESCRIPTION "<Definition> For NTCIP 1202 user clarification, this
            object contains the maximum number of computed lane entries this
            ASC supports. This object indicates the maximum rows which shall
            appear in the mapComputedLaneTable object.
      <Object Identifier> 1.3.6.1.4.1.1206.4.2.17.2.9
      <Unit> lane"
      REFERENCE "SAE J2735 DF_ComputedLane"
::= { map 9 }
```

 © 2023 AASHTO / ITE / NEMA

### 7.3.10 Intersection Computed Lane Table

```
mapComputedLaneTable   OBJECT-TYPE
      SYNTAX   SEQUENCE OF MapComputedLaneEntry
      ACCESS   not-accessible
      STATUS   deprecated
      DESCRIPTION "<Definition> This table contains computed lane information
            for an intersection. The number of rows in this table is equal to
            the maxComputedLanes object.
      <TableType> static
      <Object Identifier> 1.3.6.1.4.1.1206.4.2.17.2.10"
::= { map 10 }

mapComputedLaneEntry   OBJECT-TYPE
      SYNTAX   MapComputedLaneEntry
      ACCESS   not-accessible
      STATUS   deprecated
      DESCRIPTION "<Definition> The parameters for a specific computed lane
            at an intersection.
      <Object Identifier> 1.3.6.1.4.1.1206.4.2.17.2.10.1"
      INDEX  { mapLaneIndex }
::= { mapComputedLaneTable 1 }

MapComputedLaneEntry::= SEQUENCE {
      mapComputedLaneReference      INTEGER, --deprecated
      mapComputedLaneXOffset        INTEGER,--deprecated
      mapComputedLaneYOffset        INTEGER,--deprecated
      mapComputedLaneAngle          INTEGER,--deprecated
      mapComputedLaneXScale         INTEGER,--deprecated
      mapComputedLaneYScale         INTEGER   }–deprecated
```

#### 7.3.10.1 Computed Lane Reference

```
mapComputedLaneReference   OBJECT-TYPE
      SYNTAX  INTEGER (1..255)
      ACCESS  read-only
      STATUS  deprecated
      DESCRIPTION "<Definition> The index of the lane (mapLaneIndex) that
            this computed lane is based on. This value shall not exceed the
            maxLanes object value.
      <Object Identifier> 1.3.6.1.4.1.1206.4.2.17.2.10.1.1"
::= { mapComputedLaneEntry 1 }
```

#### 7.3.10.2 Computed Lane X Offset

```
mapComputedLaneXOffset  OBJECT-TYPE
      SYNTAX  INTEGER(-32767..32767)
      ACCESS  read-write
      STATUS  deprecated
      DESCRIPTION "<Definition> For NTCIP 1202 user clarification, the X
            offset from the x-coordinate of the initial path node of the
            referenced lane (mapComputedLaneReference).
      <Object Identifier> 1.3.6.1.4.1.1206.4.2.17.2.10.1.2"
      REFERENCE "SAE J2735 DF_ComputedLane and DE_DrivenLineOffsetLg"
      DEFVAL { 0 }
::= { mapComputedLaneEntry 2 }
```

© 2023 AASHTO / ITE / NEMA Copy Per MIB Distribution Permission

#### 7.3.10.3 Computed Lane Y Offset

```
mapComputedLaneYOffset  OBJECT-TYPE
      SYNTAX  INTEGER(-32767..32767)
      ACCESS  read-write
      STATUS  deprecated
      DESCRIPTION "<Definition> For NTCIP 1202 user clarification, the Y
            offset from the y-coordinate of the initial path node of the
            referenced lane (mapComputedLaneReference).
      <Object Identifier> 1.3.6.1.4.1.1206.4.2.17.2.10.1.3"
      REFERENCE "SAE J2735 DF_ComputedLane and DE_DrivenLineOffsetLarge"
      DEFVAL { 0 }
::= { mapComputedLaneEntry 3 }
```

#### 7.3.10.4 Computed Lane Angle

```
mapComputedLaneAngle  OBJECT-TYPE
      SYNTAX  INTEGER(0..28800)
      ACCESS  read-write
      STATUS  deprecated
      DESCRIPTION "<Definition> For NTCIP 1202 user clarification, a path
            rotation value for the lane. Rotation occurs around the initial
            path node of the referenced lane (mapComputedLaneReference).
      <Object Identifier> 1.3.6.1.4.1.1206.4.2.17.2.10.1.4"
      REFERENCE "SAE J2735 DF_ComputedLane and DE_Angle"
      DEFVAL { 28800 }
::= { mapComputedLaneEntry 4 }
```

#### 7.3.10.5 Computed Lane X Scale

```
mapComputedLaneXScale  OBJECT-TYPE
      SYNTAX  INTEGER(-2048..2047)
      ACCESS  read-write
      STATUS  deprecated
      DESCRIPTION "<Definition> For NTCIP 1202 user clarification, a value
            for translations or zooming of the lane's path nodes. The values
            found in the reference lane are all expanded or contracted based
            on the path node's X values from the coordinates of the reference
            lane's initial path point.
      <Object Identifier> 1.3.6.1.4.1.1206.4.2.17.2.10.1.5"
      REFERENCE "SAE J2735 DF_ComputedLane and DE_Scale_B12"
      DEFVAL { 0 }
::= { mapComputedLaneEntry 5 }
```

#### 7.3.10.6 Computed Lane Y Scale

```
mapComputedLaneYScale  OBJECT-TYPE
      SYNTAX  INTEGER(-2048..2047)
      ACCESS  read-write
      STATUS  deprecated
      DESCRIPTION "<Definition> For NTCIP 1202 user clarification, a value
            for translations or zooming of the lane's path nodes. The values
            found in the reference lane are all expanded or contracted based
            on the path node's Y values from the coordinates of the reference
            lane's initial path point.
      <Object Identifier> 1.3.6.1.4.1.1206.4.2.17.2.10.1.6"
      REFERENCE "SAE J2735 DF_ComputedLane and DE_Scale_B12"
```

Copy Per MIB Distribution Permission © 2023 AASHTO / ITE / NEMA

```
      DEFVAL { 0 }
::= { mapComputedLaneEntry 6 }
```

#### 7.3.11 Maximum Lane Connections

```
maxLaneConnects   OBJECT-TYPE
      SYNTAX INTEGER (0..16)
      ACCESS read-only
      STATUS deprecated
      DESCRIPTION "<Definition> This object contains the maximum number of
            connections this RSU supports for a lane. This object indicates
            the maximum rows which shall appear in the mapLaneConnectTable
            object.
      <Object Identifier> 1.3.6.1.4.1.1206.4.2.17.2.11"
::= { map 11 }
```

#### 7.3.12 Lane Connection Table

```
mapLaneConnectTable   OBJECT-TYPE
      SYNTAX   SEQUENCE OF MapLaneConnectEntry
      ACCESS   not-accessible
      STATUS   deprecated
      DESCRIPTION "<Definition> This table contains the connection
            information for a lane beyond the stop line. The number of rows
            in this table is equal to the maxLaneConnects object.
      <TableType> static
      <Object Identifier> 1.3.6.1.4.1.1206.4.2.17.2.12"
::= { map 12 }

mapLaneConnectEntry   OBJECT-TYPE
      SYNTAX   MapLaneConnectEntry
      ACCESS   not-accessible
      STATUS   deprecated
      DESCRIPTION "<Definition> The parameters for a specific connection for
            a lane.
      <Object Identifier> 1.3.6.1.4.1.1206.4.2.17.2.12.1"
      INDEX  { mapLaneIndex, mapLaneConnectIndex }
::= { mapLaneConnectTable 1 }

MapLaneConnectEntry::= SEQUENCE {
      mapLaneConnectIndex                 INTEGER,   --deprecated
      mapLaneConnectId                    INTEGER,   --deprecated
      mapLaneConnectManeuver              INTEGER,   --deprecated
      mapLaneConnectIntersectionId        INTEGER,   --deprecated
      mapLaneConnectIntersectionAuthority INTEGER,   --deprecated
      mapLaneConnectChannel               INTEGER,   --deprecated
      mapLaneConnectClass                 INTEGER,   --deprecated
      mapLaneConnectManeuverNumber        INTEGER   }   --deprecated
```

##### 7.3.12.1 Lane Connect Index

```
mapLaneConnectIndex   OBJECT-TYPE
      SYNTAX  INTEGER (1..16)
      ACCESS  read-only
      STATUS  deprecated
```

© 2023 AASHTO / ITE / NEMA 

```
      DESCRIPTION "<Definition> The lane connection number for the objects in
            this row. This value shall not exceed the maxLaneConnects object
            value.
      <Object Identifier> 1.3.6.1.4.1.1206.4.2.17.2.12.1.1
      <Unit> lane connection"
::= { mapLaneConnectEntry 1 }
```

#### 7.3.12.2 Lane Connect Identifier

```
mapLaneConnectId   OBJECT-TYPE
      SYNTAX  INTEGER (1..255)
      ACCESS  read-only
      STATUS  deprecated
      DESCRIPTION "<Definition> The index of the lane (mapLaneIndex) that
            this lane connects to. This value shall not exceed the maxLanes
            object value.
      <Object Identifier> 1.3.6.1.4.1.1206.4.2.17.2.12.1.2"
::= { mapLaneConnectEntry 2 }
```

#### 7.3.12.3 Lane Connect Maneuver

```
mapLaneConnectManeuver   OBJECT-TYPE
      SYNTAX INTEGER (0..4095)
      ACCESS read-write
      STATUS deprecated
      DESCRIPTION "<Definition> For NTCIP 1202 user clarification, represents
            the maneuver(s) necessary from this lane at the stop line to the
            connecting lane. Note: these values may be further restricted by
            vehicle class, local regulations or other changing conditions. If
            a specific attribute for the lane is true, the associated bit
            shall be set to (1).
      <Object Identifier> 1.3.6.1.4.1.1206.4.2.17.2.12.1.3"
      REFERENCE "SAE J2735 DF_ConnectingLane and DE_AllowedManeuvers"
::= { mapLaneConnectEntry 3 }
```

#### 7.3.12.4 Lane Connect Remote Intersection ID

```
mapLaneConnectIntersectionId   OBJECT-TYPE
      SYNTAX  INTEGER (1..65535)
      ACCESS  read-only
      STATUS  deprecated
      DESCRIPTION "<Definition> For NTCIP 1202 user clarification, the
            identifier of the intersection if the connecting lane belongs to
            another intersection layout.
      <Object Identifier> 1.3.6.1.4.1.1206.4.2.17.2.12.1.4"
      REFERENCE "SAE J2735 DF_Connection and DE_IntersectionID"
::= { mapLaneConnectEntry 4 }
```

#### 7.3.12.5 Lane Connect Authority Identifier

```
mapLaneConnectIntersectionAuthority  OBJECT-TYPE
      SYNTAX  INTEGER (0..65535)
      ACCESS  read-write
      STATUS  deprecated
      DESCRIPTION "<Definition> For NTCIP 1202 user clarification, non zero
            if the intersection of the connecting lane belongs to another
```

 © 2023 AASHTO / ITE / NEMA

```
            entity. A globally unique identifier assigned to an entity in a
            region (or country) responsible for assigning the intersectionId.
      <Object Identifier> 1.3.6.1.4.1.1206.4.2.17.2.12.1.5"
      REFERENCE "SAE J2735 DE_RoadRegulatorID"
::= { mapLaneConnectEntry 5 }
```

#### 7.3.12.6 Lane Connect Channel

```
mapLaneConnectChannel  OBJECT-TYPE
      SYNTAX  INTEGER (1..255)
      ACCESS  read-write
      STATUS  deprecated
      DESCRIPTION "<Definition> For NTCIP 1202 user clarification, the
            channelNumber that this lane connecting maneuver is associated
            with. This value shall not exceed the maxChannels object value.
      <Object Identifier> 1.3.6.1.4.1.1206.4.2.17.2.12.1.6"
      REFERENCE "SAE J2735 DF_Connection and DE_SignalGroupID"
::= { mapLaneConnectEntry 6 }
```

#### 7.3.12.7 Lane Connect Restriction Class

```
mapLaneConnectClass   OBJECT-TYPE
      SYNTAX   INTEGER (0..255)
      ACCESS   read-write
      STATUS   deprecated
      DESCRIPTION "<Definition> For NTCIP 1202 user clarification, the
            mapUserClassId to which this lane connection maneuver applies. A
            value of 0 indicates that lane connection maneuver applies to all
            vehicle types.
      <Object Identifier> 1.3.6.1.4.1.1206.4.2.17.2.12.1.7"
      REFERENCE "SAE J2735 DF_Connection and DE_RestrictionClassID"
      DEFVAL { 0 }
::= { mapLaneConnectEntry 7 }
```

#### 7.3.12.8 Lane Connect Maneuver Number

```
mapLaneConnectManeuverNumber   OBJECT-TYPE
      SYNTAX   INTEGER (0..255)
      ACCESS   read-only
      STATUS   deprecated
      DESCRIPTION "<Definition> For NTCIP 1202 user clarification, the
            movementManeuverId for a lane to lane connection that this
            mapLaneIndex and mapLaneConnectIndex is tied to. The
            movementManeuverIdentifier is unique within the intersection.
            Used to relate this lane connection to variable interval
            information that may be sent in the SPaT message. A value of 0
            indicates undefined or not used.
      <Object Identifier> 1.3.6.1.4.1.1206.4.2.17.2.12.1.8"
      REFERENCE "SAE J2735 DF_Connection and DE_LaneConnectionID"
::= { mapLaneConnectEntry 8 }
```

### 7.3.13 Maximum Number of Speed Limits

```
maxSpeedLimits   OBJECT-TYPE
      SYNTAX   INTEGER (1..9)
      ACCESS   read-only
```

© 2023 AASHTO / ITE / NEMA 

```
      STATUS   deprecated
      DESCRIPTION "<Definition> This object contains the maximum number of
            speed limit entries this CU supports. This object indicates the
            maximum rows which shall appear in the mapSpeedLimitTable object.
      <Object Identifier> 1.3.6.1.4.1.1206.4.2.17.2.13
      <Unit> speed limits"
::= { map 13 }
```

#### 7.3.14 Intersection Speed Limit Table

```
mapSpeedLimitTable   OBJECT-TYPE
      SYNTAX   SEQUENCE OF MapSpeedLimitEntry
      ACCESS   not-accessible
      STATUS   deprecated
      DESCRIPTION "<Definition> This table contains speed limit information.
            The number of rows in this table is equal to the maxSpeedLimits
            object.
      <TableType> static
      <Object Identifier> 1.3.6.1.4.1.1206.4.2.17.2.14"
::= { map 14 }

mapSpeedLimitEntry   OBJECT-TYPE
      SYNTAX   MapSpeedLimitEntry
      ACCESS   not-accessible
      STATUS   deprecated
      DESCRIPTION "<Definition> The parameters for a specific speed limit.
      <Object Identifier> 1.3.6.1.4.1.1206.4.2.17.2.14.1"
      INDEX  { mapSpeedLimitIndex }
::= { mapSpeedLimitTable 1 }

MapSpeedLimitEntry::= SEQUENCE {
      mapSpeedLimitIndex      INTEGER,  --deprecated
      mapSpeedLimitType       INTEGER,  --deprecated
      mapSpeedLimit           INTEGER   }   --deprecated
```

##### 7.3.14.1 Speed Limit Index

```
mapSpeedLimitIndex   OBJECT-TYPE
      SYNTAX  INTEGER (1..9)
      ACCESS  read-only
      STATUS  deprecated
      DESCRIPTION "<Definition> The speed limit index for objects in this
            row. This value shall not exceed the maxSpeedLimits object value.
      <Object Identifier> 1.3.6.1.4.1.1206.4.2.17.2.14.1.1
      <Unit> speed limit"
::= { mapSpeedLimitEntry 1 }
```

##### 7.3.14.2 Speed Limit Type

```
mapSpeedLimitType   OBJECT-TYPE
      SYNTAX  INTEGER {unknown (0),  -- Speed limit type not available
                  maxSpeedInSchoolZone (1),   -- Only sent when the limit is
            active
                  maxSpeedInSchoolZoneWhenChildrenArePresent (2),  -- Sent at
            any time
```

 © 2023 AASHTO / ITE / NEMA

```
                maxSpeedInConstructionZone (3),   -- Used for work zones,
            incident zones, etc. where a reduced speed is present
                vehicleMinSpeed (4),
                vehicleMaxSpeed (5),   -- Regulatory speed limit for general
            traffic
                vehicleNightMaxSpeed (6),
                truckMinSpeed (7),
                truckMaxSpeed (8),
                truckNightMaxSpeed (9),
                vehiclesWithTrailersMinSpeed (10),
                vehiclesWithTrailersMaxSpeed (11),
                vehiclesWithTrailersNightMaxSpeed (12) }
      ACCESS  read-write
      STATUS  deprecated
      DESCRIPTION "<DefinDESCRIPTION "<Definition> For NTCIP 1202 user
            clarification, the first enumeration (0) is unknown, the second
            enumeration (1) is maxSpeedInSchoolZone, etc.
      <Object Identifier> 1.3.6.1.4.1.1206.4.2.17.2.14.1.2"
      REFERENCE "SAE J2735 DE_SpeedLimitType"
      DEFVAL { unknown }
::= { mapSpeedLimitEntry 2 }
```

#### 7.3.14.3 Speed Limit

```
mapSpeedLimit   OBJECT-TYPE
      SYNTAX  INTEGER (0..8191)
      ACCESS  read-write
      STATUS  deprecated
      DESCRIPTION "<Definition> For NTCIP 1202 user clarification, the speed
            limit value.
      <Object Identifier> 1.3.6.1.4.1.1206.4.2.17.2.14.1.3"
      REFERENCE "SAE J2735 DF_RegulatorySpeedLimit and DE_Velocity"
      DEFVAL { 8191 }
::= { mapSpeedLimitEntry 3 }
```

### 7.3.15 Maximum User Types

```
maxUserTypes   OBJECT-TYPE
      SYNTAX   INTEGER(1..254)
      ACCESS   read-only
      STATUS   deprecated
      DESCRIPTION "<Definition> This object contains the maximum number of
            user type entries this CU supports. This object indicates the
            maximum rows which shall appear in the mapUserTable object.
      <Object Identifier> 1.3.6.1.4.1.1206.4.2.17.2.15
      <Unit> user types"
::= { map 15 }
```

### 7.3.16 Intersection User Types Table

```
mapUserTable   OBJECT-TYPE
      SYNTAX   SEQUENCE OF MapUserEntry
      ACCESS   not-accessible
      STATUS   deprecated
```

© 2023 AASHTO / ITE / NEMA Copy Per MIB Distribution Permission

```
      DESCRIPTION "<Definition> This table contains a list of user classes
            that belong to a given assigned index. The number of rows in this
            table is equal to the maxUserTypes object.
      <TableType> static
      <Object Identifier> 1.3.6.1.4.1.1206.4.2.17.2.16"
::= { map 16 }

mapUserEntry   OBJECT-TYPE
      SYNTAX   MapUserEntry
      ACCESS   not-accessible
      STATUS   deprecated
      DESCRIPTION "<Definition> A description of user type special movements
            supported at this intersection.
      <Object Identifier> 1.3.6.1.4.1.1206.4.2.17.2.16.1"
      INDEX  { mapUserIndex }
::= { mapUserTable 1 }

MapUserEntry::= SEQUENCE {
      mapUserIndex      INTEGER,   --deprecated
      mapUserClassTypes OCTET STRING   }   --deprecated
```

#### 7.3.16.1 MAP User Type Index

```
mapUserIndex   OBJECT-TYPE
      SYNTAX  INTEGER(1..254)
      ACCESS  read-only
      STATUS  deprecated
      DESCRIPTION "<Definition> For NTCIP 1202 user clarification, the index
            of the user type for objects in this row. This value shall not
            exceed the maxUserTypes object value.
      <Object Identifier> 1.3.6.1.4.1.1206.4.2.17.2.16.1.1"
      REFERENCE "SAE J2735 DE_RestrictionClassID"
::= { mapUserEntry 1 }
```

#### 7.3.16.2 MAP User Class Types

```
mapUserClassTypes   OBJECT-TYPE
      SYNTAX  OCTET STRING (SIZE (1..16))
      ACCESS  read-write
      STATUS  deprecated
      DESCRIPTION "<Definition> For NTCIP 1202 user clarification, each octet
            within the octet string represents an enumeration defined in SAE
            J2735 DF_RestrictionAppliesTo. This object is used to indicate
            movements at an intersection are intended for specific traveler
            types or classes, as represented by SAE J2735
            DF_RestrictionAppliesTo.
      <Object Identifier> 1.3.6.1.4.1.1206.4.2.17.2.16.1.2"
      REFERENCE "SAE J2735 DF_RestrictionUserTypeList"
      DEFVAL { '00'H }
::= { mapUserEntry 2 }
```

### 7.3.17 Maximum MAP Plans

```
maxMapPlans   OBJECT-TYPE
      SYNTAX   INTEGER(0..8)
      ACCESS   read-only
```

 © 2023 AASHTO / ITE / NEMA

```
      STATUS   deprecated
      DESCRIPTION "<Definition> This object contains the maximum number of
            MAP plans this RSU supports. This object indicates the maximum
            rows which shall appear in the mapPlanTable object. Each MAP plan
            defines the lane indexes that are to be broadcasted in a MAP data
            message.
      <Object Identifier> 1.3.6.1.4.1.1206.4.2.17.2.17
      <Unit> MAP plans"
::= { map 19 }
```

#### 7.3.18 MAP Plan Table

```
mapPlanTable   OBJECT-TYPE
      SYNTAX   SEQUENCE OF MapPlanEntry
      ACCESS   not-accessible
      STATUS   deprecated
      DESCRIPTION "<Definition> This table contains MAP plans that are stored
            on this RSU for broadcast. The number of rows in this table is
            equal to the maxMapPlans object.
      <TableType> static
      <Object Identifier> 1.3.6.1.4.1.1206.4.2.17.2.18"
::= { map 20 }

mapPlanEntry   OBJECT-TYPE
      SYNTAX   MapPlanEntry
      ACCESS   not-accessible
      STATUS   deprecated
      DESCRIPTION "<Definition> The lane indexes that are to be broadcasted
            by a RSU.
      <Object Identifier> 1.3.6.1.4.1.1206.4.2.17.2.18.1"
      INDEX  { mapPlanIndex }
::= { mapPlanTable 1 }

MapPlanEntry::= SEQUENCE {
      mapPlanIndex            INTEGER,   --deprecated
      mapPlanLanes            OCTET STRING,   --deprecated
      mapPlanCRC              OCTET STRING,   --deprecated
      mapPlanLayerType        INTEGER,   --deprecated
      mapPlanLayerId          INTEGER,   --deprecated
      mapPlanMetadataMethod   DisplayString,   --deprecated
      mapPlanMetadataAgency   DisplayString,   --deprecated
      mapPlanMetadataDate     DisplayString,   --deprecated
      mapPlanMetadataGeoid    DisplayString }   --deprecated
```

##### 7.3.18.1 MAP Plan Index

```
mapPlanIndex   OBJECT-TYPE
      SYNTAX   INTEGER (1..255)
      ACCESS   read-only
      STATUS   deprecated
      DESCRIPTION "<Definition> The index of the MAP plan number for objects
            in this row. This value shall not exceed the maxMapPlans object
            value. Each MAP plan defines the lane indexes that are to be
            broadcasted in a MAP data message.
      <Object Identifier> 1.3.6.1.4.1.1206.4.2.17.2.18.1.1
      <Unit> number"
::= { mapPlanEntry 1 }
```

© 2023 AASHTO / ITE / NEMA Copy Per MIB Distribution Permission

#### 7.3.18.2 MAP Plan Lanes

```
mapPlanLanes   OBJECT-TYPE
      SYNTAX   OCTET STRING
      ACCESS   read-write
      STATUS   deprecated
      DESCRIPTION "<Definition> Each octet within the octet string contains
            the mapLaneIndex (binary value) that is to be broadcasted in a
            MAP data message. An octet of 00 indicates there are no
            additional lane indexes in the sequence.
      <Object Identifier> 1.3.6.1.4.1.1206.4.2.17.2.18.1.2"
      DEFVAL { ''H }
::= { mapPlanEntry 2 }
```

#### 7.3.18.3 MAP Plan CRC

```
mapPlanCRC   OBJECT-TYPE
      SYNTAX   OCTET STRING (SIZE(2))
      ACCESS   read-only
      STATUS   deprecated
      DESCRIPTION "<Definition> The mapPlanCRC is calculated using the CRC-16
            defined in ISO/IEC 13239:2002) using the associated OER-encoded
            (as defined in NTCIP 1102) MapPlanCRCByteStream.

            MapPlanCRCByteStream ::= SEQUENCE OF MapPlanCRCList

            mapPlanCRCList  SEQUENCE {
                  mapLaneCRC      INTEGER (1..65535) }

            For example, if there are three lanes referenced in mapPlanLanes,
            resulting in the value of mapPlanLanes being 08 04 05 00, and
            mapLaneCRC.8 is 42 73, mapLaneCRC.4 is 22 16, and mapLaneCRC.5 is
            97 63, then the OER-encoded string on which the CRC shall be
            calculated is:

                  01 03 42 73 22 16 97 63
      <Object Identifier> 1.3.6.1.4.1.1206.4.2.17.2.18.1.3"
      DEFVAL { '0000'H }
::= { mapPlanEntry 3 }
```

#### 7.3.18.4 MAP Plan Layer Type

```
mapPlanLayerType OBJECT-TYPE
      SYNTAX INTEGER {none (0),
                      mixedContent (1), -- two or more of the below types
                      generalMapData (2),
                      intersectionData (3),
                      curveData (4),
                      roadwaySectionData (5),
                      parkingAreaData (6),
                      sharedLaneData (7) }
      ACCESS read-write
      STATUS deprecated
```

 © 2023 AASHTO / ITE / NEMA

```
      DESCRIPTION "<Definition> For NTCIP 1202 user clarification, the
            enumerations for this object is defined in SAE J2735
            DE_LayerType, where 0 is none, 1 is mixedContent, etc.
      <Object Identifier> 1.3.6.1.4.1.1206.4.2.17.2.18.1.4"
      REFERENCE "SAE J2735 DE_LayerType"
::= { mapPlanEntry 4 }
```

#### 7.3.18.5 MAP Plan Layer Identifier

```
mapPlanLayerId OBJECT-TYPE
      SYNTAX INTEGER (0..100)
      ACCESS read-write
      STATUS deprecated
      DESCRIPTION "<Definition> For NTCIP 1202 user clarification, an
            identifier for a layer of a geographic map fragment, such as an
            intersection.
      <Object Identifier> 1.3.6.1.4.1.1206.4.2.17.2.18.1.5"
      REFERENCE "SAE J2735 DE_LayerID"
::= { mapPlanEntry 5 }
```

#### 7.3.18.6 MAP Plan Metadata Method

```
mapPlanMetadataMethod   OBJECT-TYPE
      SYNTAX   DisplayString (SIZE (0..255))
      ACCESS   read-write
      STATUS   deprecated
      DESCRIPTION "<Definition> For NTCIP 1202 user clarification, this
            object contains a description of the method used to process the
            map fragment being broadcast in the MAP data message.
      <Object Identifier> 1.3.6.1.4.1.1206.4.2.17.2.18.1.6"
      REFERENCE "SAE J2735 DF_DataParameters"
::= { mapPlanEntry 6 }
```

#### 7.3.18.7 MAP Plan Metadata Agency

```
mapPlanMetadataAgency   OBJECT-TYPE
      SYNTAX   DisplayString (SIZE (0..255))
      ACCESS   read-write
      STATUS   deprecated
      DESCRIPTION "<Definition> For NTCIP 1202 user clarification, this
            object describes the agency that developed or processed the map
            fragment being broadcast in the MAP data message.
      <Object Identifier> 1.3.6.1.4.1.1206.4.2.17.2.18.1.7"
      REFERENCE "SAE J2735 DF_DataParameters"
::= { mapPlanEntry 7 }
```

#### 7.3.18.8 MAP Plan Metadata Date

```
mapPlanMetadataDate   OBJECT-TYPE
      SYNTAX   DisplayString (SIZE (0..255))
      ACCESS   read-write
      STATUS   deprecated
      DESCRIPTION "<Definition> For NTCIP 1202 user clarification, this
            object contains the date that the map fragment being broadcast in
            the MAP data message was last checked.
      <Object Identifier> 1.3.6.1.4.1.1206.4.2.17.2.18.1.8"
```

© 2023 AASHTO / ITE / NEMA Copy Per MIB Distribution Permission

```
      REFERENCE "SAE J2735 DF_DataParameters"
::= { mapPlanEntry 8 }
```

#### 7.3.18.9 MAP Plan Metadata Geoid

```
mapPlanMetadataGeoid   OBJECT-TYPE
      SYNTAX   DisplayString (SIZE (0..255))
      ACCESS   read-write
      STATUS   deprecated
      DESCRIPTION "<Object Identifier> 1.3.6.1.4.1.1206.4.2.17.2.18.1.9"
      REFERENCE "SAE J2735 DF_DataParameters"
::= { mapPlanEntry 9 }

END
```

 © 2023 AASHTO / ITE / NEMA

# Annex A
# Requirements Traceability Matrix (RTM) [Normative]

The Requirements Traceability Matrix (RTM) links the Functional Requirements as presented in Section 3 with the corresponding Dialogs (Section 4.2) on the same (gray) line. Each Functional Requirement/Dialog relates/uses one or more groups of Objects. The Objects (also known as Data Elements) are listed to the side; the formal definition of each object is contained within Section 5. Using this table, each Functional Requirement can thus be traced in a standardized way.

> Note: The INDEX objects into any of the tables are not explicitly exchanged but are used as index values for other objects that are exchanged.

The audience for this table is implementers (vendors and central system developers) and conformance testers. Additionally, other interested parties might use this table to determine how particular functions are to be implemented using the standardized dialogs, interfaces, and object definitions.

To conform to a requirement, an ASC system shall implement all objects traced from that requirement, and unless otherwise indicated, shall implement all dialogs traced from the requirement. To be consistent with a requirement, an ASC system shall be able to fulfill the requirement using only objects that a conforming ASC system is required to support.

Section 3 defines Supplemental Requirements, which are refining other functional requirements. These functional requirements in turn are generally traced to design elements (e.g., rather than being directly traced to design elements).

> Note: Visit www.ntcip.org for information on availability of electronic copies of the RTM.

## A.1 Notation [Informative]

### A.1.1 Functional Requirement Columns

The functional requirements are defined within Section 3 and the RTM is based upon the requirements within that section. The section number and the functional requirement name are indicated within these columns.

### A.1.2 Dialog Column

The standardized dialogs are defined within Section 4 and the RTM references the traces from requirements to this dialog. The section number of the dialog is indicated within this column.

© 2023 AASHTO / ITE / NEMA Copy Per RTM Distribution Permission

### A.1.3 Object Columns

The objects are defined within Section 5 of NTCIP 1202 v03 and Section 2 of NTCIP 1201 v03. The RTM references the data objects that are referenced by the dialog. The section number and object name are indicated within these columns.

### A.1.4 Additional Specifications

The "Additional Specifications" column may (and should) be used to provide additional notes and requirements about the dialog or may be used by an implementer to provide any additional details about the implementation.

## A.2 Instructions For Completing the RTM [Informative]

To find the standardized design content for a functional requirement, search for the requirement identification number and functional requirement under the functional requirements columns. Next to the functional requirements column is a dialog identification number, identifying either a generic dialog (found in Annex G.3) or a specified dialog (found in Section 4.2) to be used to fulfill that requirement. To the right of the dialog identification number are the identification number and name of the data objects that are referenced or used by the dialog to fulfill the functional requirement. Object definitions specific to NTCIP 1202 v03 can be found in Section 5. If an object is defined in a different standard, that standard shall be listed first, followed by the section number where the object definition can be found. The "Additional Specifications" column provides additional notes or details about the design content.

## A.3 Requirements Traceability Matrix (RTM) Table

**Table 7 Requirements Traceability Matrix (RTM)**

| Requirements Traceability Matrix (RTM) | | | | | |
|---|---|---|---|---|---|
| **FR ID** | **Functional Requirement** | **Dialog ID** | **Object ID** | **Object Name** | **Additional Specifications** |
| 3.4 | Architectural Requirements | | | | |
| 3.4.1 | Support Basic Communications Requirements | | | | |
| 3.4.1.1 | Retrieve Data | G.1 | | | |
| 3.4.1.2 | Deliver Data | G.3 | | | |
| 3.4.1.3 | Explore Data | G.2 | | | |
| 3.4.1.4 | SNMP Requirements | | | | |
| 3.4.1.4.1 | Monitor SNMP Information | G.1 | | | |
| | | | RFC 1213 Clause 6 | snmpInPkts | |

Copy Per RTM Distribution Permission © 2023 AASHTO / ITE / NEMA

| Requirements Traceability Matrix (RTM) | | | | | |
|---|---|---|---|---|---|
| **FR ID** | **Functional Requirement** | **Dialog ID** | **Object ID** | **Object Name** | **Additional Specifications** |
| | | | RFC 1213 Clause 6 | snmpOutPkts | |
| | | | RFC 1213 Clause 6 | snmpBadVersions | |
| | | | RFC 1213 Clause 6 | snmpInBadCommunityNames | |
| | | | RFC 1213 Clause 6 | snmpInBadCommunityUses | |
| | | | RFC 1213 Clause 6 | snmpInASNParseErrs | |
| | | | RFC 1213 Clause 6 | snmpInTooBigs | |
| | | | RFC 1213 Clause 6 | snmpInNoSuchNames | |
| | | | RFC 1213 Clause 6 | snmpInBadValues | |
| | | | RFC 1213 Clause 6 | snmpInReadOnlys | |
| | | | RFC 1213 Clause 6 | snmpInGenErrs | |
| | | | RFC 1213 Clause 6 | snmpInGetRequests | |
| | | | RFC 1213 Clause 6 | snmpInGetNexts | |
| | | | RFC 1213 Clause 6 | snmpInSetRequests | |
| | | | RFC 1213 Clause 6 | snmpInGetResponses | |
| | | | RFC 1213 Clause 6 | snmpInTraps | |

© 2023 AASHTO / ITE / NEMA Copy Per RTM Distribution Permission

| Requirements Traceability Matrix (RTM) | | | | | |
|---|---|---|---|---|---|
| **FR ID** | **Functional Requirement** | **Dialog ID** | **Object ID** | **Object Name** | **Additional Specifications** |
| | | | RFC 1213 Clause 6 | snmpOutTooBigs | |
| | | | RFC 1213 Clause 6 | snmpOutNoSuchNames | |
| | | | RFC 1213 Clause 6 | snmpOutBadValues | |
| | | | RFC 1213 Clause 6 | snmpOutGenErrs | |
| | | | RFC 1213 Clause 6 | snmpOutGetRequests | |
| | | | RFC 1213 Clause 6 | snmpOutGetNexts | |
| | | | RFC 1213 Clause 6 | snmpOutSetRequests | |
| | | | RFC 1213 Clause 6 | snmpOutGetResponses | |
| | | | 1103v01 – A.3.1 | snmpMaxPacketSize | |
| 3.4.1.4.2 | Monitor Successful SNMP GET Requests | G.1 | | | |
| | | | RFC 1213 Clause 6 | snmpInTotalReqVars | |
| 3.4.1.4.3 | Monitor Valid SNMP SET Requests | G.1 | | | |
| | | | RFC 1213 Clause 6 | snmpInTotalSetVars | |
| 3.4.1.4.4 | Monitor SNMP Traps | G.1 | | | |
| | | | RFC 1213 Clause 6 | snmpOutTraps | |
| 3.4.1.4.5 | Enable Authentication Traps | G.3 | | | |
| | | | RFC 1213 Clause 6 | snmpEnableAuthenTraps | |
| 3.4.2 | Support Logged Data Requirements | | | | See Annex H.1.3 |

Copy Per RTM Distribution Permission
© 2023 AASHTO / ITE / NEMA

| Requirements Traceability Matrix (RTM) | | | | | |
|---|---|---|---|---|---|
| **FR ID** | **Functional Requirement** | **Dialog ID** | **Object ID** | **Object Name** | **Additional Specifications** |
| 3.4.3 | Support Exception Reporting Requirements | | | | See Annex H.1.1.10 |
| 3.4.4 | Manage Access Requirements | | | | |
| 3.4.4.1 | Configure Access | H.2.7 | | | |
| | | | 1103v03 – A.8.1 | communityNameAdmin | |
| | | | 1103v03 – A.8.2 | communityNamesMax | |
| | | | 1103v03 – A.8.3 | communityNameTable | |
| | | | 1103v03 – A.8.3.1 | communityNameIndex | |
| | | | 1103v03 – A.8.3.2 | communityNameUser | |
| | | | 1103v03 – A.8.3.3 | communityNameAccessMask | |
| 3.4.4.2 | Determine Current Access Settings | H.2.5 | | | |
| | | | 1103v03 – A.8.1 | communityNameAdmin | |
| | | | 1103v03 – A.8.2 | communityNamesMax | |
| | | | 1103v03 – A.8.3 | communityNameTable | |
| | | | 1103v03 – A.8.3.1 | communityNameIndex | |
| | | | 1103v03 – A.8.3.2 | communityNameUser | |
| | | | 1103v03 – A.8.3.3 | communityNameAccessMask | |
| 3.5 | Data Exchange and Operational Environment Requirements | | | | |

© 2023 AASHTO / ITE / NEMA Copy Per RTM Distribution Permission

| Requirements Traceability Matrix (RTM) | | | | | |
|---|---|---|---|---|---|
| **FR ID** | **Functional Requirement** | **Dialog ID** | **Object ID** | **Object Name** | **Additional Specifications** |
| 3.5.1 | ASC Configuration Management Requirements | | | | |
| 3.5.1.1 | Manage ASC Location Requirements | | | | |
| 3.5.1.1.1 | Configure ASC Location | G.3 | | | |
| | | | 1204v04 – 5.4.1 | essLatitude | |
| | | | 1204v04 – 5.4.2 | essLongitude | |
| | | | 1204v04 – 5.5.1 | essReferenceHeight | Note: This height shall be measured to the base of the ASC cabinet. |
| 3.5.1.1.2 | Configure ASC Location—Antenna Offset | G.3 | | | |
| | | | 5.4.17 | ascElevationOffset | |
| 3.5.1.2 | Manage Communications Requirements | | | | |
| 3.5.1.2.1 | Configure Communications Requirements | | | | |
| 3.5.1.2.1.1 | Enable/Disable Communications Port | H.2.7 | | | |
| | | | 2103v02 – A.4.3.4 if.2.1 | ifIndex | |
| | | | 2103v02 – A.4.3.4 if.2.3 | ifType | |
| | | | 2103v02 – A.4.3.4 if.2.7 | ifAdminStatus | |
| | | | 2103v02 – A.4.3.4 if.2.8 | ifOperStatus | |
| | | | 5.4.23.2 | commPortTable | |
| | | | 5.4.23.2.1 | commPortType | |
| | | | 5.4.23.2.3 | commPortEnable | |
| 3.5.1.2.1.2 | Configure ASC Ethernet Ports | H.2.7 | | | |
| | | | 2103v02 – A.4.3.4 if.2 | ifTable | |

Copy Per RTM Distribution Permission © 2023 AASHTO / ITE / NEMA

| Requirements Traceability Matrix (RTM) | | | | | |
|---|---|---|---|---|---|
| **FR ID** | **Functional Requirement** | **Dialog ID** | **Object ID** | **Object Name** | **Additional Specifications** |
| | | | 2103v02 – A.4.3.4 if.2.1 | ifIndex | |
| | | | 2103v02 – A.4.3.4 if.2.3 | ifType | |
| | | | RFC 1213 | InterfacesGroup | |
| | | | 5.4.23.2 | commPortTable | |
| | | | 5.4.23.2.2 | commPortTypeIndex | |
| | | | 5.4.23.3 | maxEthernetPorts | |
| | | | 5.4.23.4 | ethernetConfigTable | |
| | | | 5.4.23.4.1 | ecfgIpAddr | |
| | | | 5.4.23.4.2 | ecfgNetMask | |
| | | | 5.4.23.4.3 | ecfgGateway | |
| | | | 5.4.23.4.4 | ecfgDNS | |
| | | | 5.4.23.4.5 | ecfgMode | |
| | | | 5.4.23.4.6 | ecfgLogicalName | |
| | | | 5.4.23.4.7 | ecfgStaticIpAddr | |
| | | | 5.4.23.4.8 | ecfgStaticNetMask | |
| | | | 5.4.23.4.9 | ecfgStaticGateway | |
| | | | 5.4.23.4.10 | ecfgStaticDNS | |
| 3.5.1.2.1.3 | Configure ASC Asynchronous Serial Ports | H.2.7 | | | |
| | | | 2103v02 – A.4.3.4 if.2 | ifTable | |
| | | | 2103v02 – A.4.3.4 if.2.1 | ifIndex | |
| | | | 2103v02 – A.4.3.4 if.2.3 | ifType | |

© 2023 AASHTO / ITE / NEMA Copy Per RTM Distribution Permission

| Requirements Traceability Matrix (RTM) | | | | | |
|---|---|---|---|---|---|
| **FR ID** | **Functional Requirement** | **Dialog ID** | **Object ID** | **Object Name** | **Additional Specifications** |
| | | | RFC 1317 | rs232AsyncPortTable | The following sections in RFC1317 are mandatory: rs232.1, rs232.2, rs232.2.1, rs232.2.2, rs232.2.5, rs232.2.6, rs232.3, rs232.3.1, rs232.3.7, rs232.3.8. |
| | | | 5.4.23.2 | commPortTable | |
| | | | 5.4.23.2.2 | commPortTypeIndex | |
| 3.5.1.2.1.4 | Configure ASC Synchronous Serial Ports | H.2.7 | | | |
| | | | 2103v02 – A.4.3.4 if.2 | ifTable | |
| | | | 2103v02 – A.4.3.4 if.2.1 | ifIndex | |
| | | | 2103v02 – A.4.3.4 if.2.3 | ifType | |
| | | | RFC 1317 | rs232SyncPortTable | The following sections in RFC1317 are mandatory: rs232.1, rs232.2, rs232.2.1, rs232.2.2, rs232.2.5, rs232.2.6, rs232.3, rs232.3.1, rs232.3.7, rs232.3.8. |
| | | | 5.4.23.2 | commPortTable | |
| | | | 5.4.23.2.2 | commPortTypeIndex | |
| 3.5.1.2.1.5 | Configure ASC Communications Protocol—Serial Ports | H.2.7 | | | |
| | | | 2103v02 – A.4.3.4 if.2.1 | ifIndex | |
| | | | 5.4.23.2 | commPortTable | |
| | | | 5.4.23.2.4 | commPortProtocolsSupported | |
| | | | 5.4.23.2.5 | commPortProtocol | |

Copy Per RTM Distribution Permission
© 2023 AASHTO / ITE / NEMA

| Requirements Traceability Matrix (RTM) | | | | | |
|---|---|---|---|---|---|
| **FR ID** | **Functional Requirement** | **Dialog ID** | **Object ID** | **Object Name** | **Additional Specifications** |
| 3.5.1.2.2 | Retrieve Communications Requirements | | | | |
| 3.5.1.2.2.1 | Determine Number of ASC Communications Ports | G.1 | | | |
| | | | 5.4.23.1 | maxCommPorts | |
| 3.5.1.2.3 | Monitor Communications Requirements | | | | |
| 3.5.1.2.3.1 | Monitor Response Timeout—Ethernet | G.1 | | | |
| | | | RFC 1643 | dot3 | |
| 3.5.1.2.3.2 | Monitor Response Timeout—Serial | G.1 | | | |
| | | | RFC 1317 | rs232 | |
| 3.5.1.2.3.3 | Monitor Data Link Errors—Ethernet | G.1 | | | |
| | | | RFC 1643 | dot3 | |
| 3.5.1.2.3.4 | Monitor Data Link Errors—Serial | G.1 | | | |
| | | | RFC 1317 | rs232 | |
| 3.5.1.2.3.5 | Monitor Polling Timeout—Port 1 | G.1 | | | |
| | | | 5.4.23.8 | port1TimeoutFault | |
| 3.5.1.2.3.6 | Monitor Polling Timeout—Serial Bus | G.1 | | | |
| | | | 5.4.23.9 | serialBus1Fault | |
| 3.5.1.2.4 | Perform Communications Diagnostics Requirements | | | | |
| 3.5.1.2.4.1 | Set Communications Port to Loopback Mode | H.2.7 | | | |
| | | | 2103v02 – A.4.3.4 if.2.1 | ifIndex | |
| | | | 5.4.23.2 | commPortTable | |
| | | | 5.4.23.2.6 | commPortDiagnostics | |
| 3.5.1.2.4.2 | Set Communications Port to Echo Mode | H.2.7 | | | |
| | | | 2103v02 – A.4.3.4 if.2.1 | ifIndex | |
| | | | 5.4.23.2 | commPortTable | |
| | | | 5.4.23.2.6 | commPortDiagnostics | |

© 2023 AASHTO / ITE / NEMA Copy Per RTM Distribution Permission

| Requirements Traceability Matrix (RTM) | | | | | |
|---|---|---|---|---|---|
| **FR ID** | **Functional Requirement** | **Dialog ID** | **Object ID** | **Object Name** | **Additional Specifications** |
| 3.5.1.3 | Retrieve Cabinet Environment Requirements | | | | |
| 3.5.1.3.1 | Monitor Cabinet Door Status | H.2.5 | | | |
| | | | 5.13.1 | maxCabinetEnvironDevices | |
| | | | 5.13.2 | cabinetEnvironDevicesTable | |
| | | | 5.13.2.1 | cabinetEnvironDeviceNumber | |
| | | | 5.13.2.2 | cabinetEnvironDeviceType | |
| | | | 5.13.2.3 | cabinetEnvironDeviceIndex | |
| | | | 5.13.2.4 | cabinetEnvironDeviceDescription | |
| | | | 5.13.2.5 | cabinetEnvironDeviceOnStatus | |
| | | | 5.13.2.6 | cabinetEnvironDeviceErrorStatus | |
| 3.5.1.3.2 | Monitor Cabinet Fan Status | H.2.5 | | | |
| | | | 5.13.1 | maxCabinetEnvironDevices | |
| | | | 5.13.2 | cabinetEnvironDevicesTable | |
| | | | 5.13.2.1 | cabinetEnvironDeviceNumber | |
| | | | 5.13.2.2 | cabinetEnvironDeviceType | |
| | | | 5.13.2.3 | cabinetEnvironDeviceIndex | |
| | | | 5.13.2.4 | cabinetEnvironDeviceDescription | |
| | | | 5.13.2.5 | cabinetEnvironDeviceOnStatus | |
| | | | 5.13.2.6 | cabinetEnvironDeviceErrorStatus | |
| 3.5.1.3.3 | Monitor Cabinet Heater Status | H.2.5 | | | |
| | | | 5.13.1 | maxCabinetEnvironDevices | |
| | | | 5.13.2 | cabinetEnvironDevicesTable | |
| | | | 5.13.2.1 | cabinetEnvironDeviceNumber | |

Copy Per RTM Distribution Permission © 2023 AASHTO / ITE / NEMA

| Requirements Traceability Matrix (RTM) | | | | | |
|---|---|---|---|---|---|
| **FR ID** | **Functional Requirement** | **Dialog ID** | **Object ID** | **Object Name** | **Additional Specifications** |
| | | | 5.13.2.2 | cabinetEnvironDeviceType | |
| | | | 5.13.2.3 | cabinetEnvironDeviceIndex | |
| | | | 5.13.2.4 | cabinetEnvironDeviceDescription | |
| | | | 5.13.2.5 | cabinetEnvironDeviceOnStatus | |
| | | | 5.13.2.6 | cabinetEnvironDeviceErrorStatus | |
| 3.5.1.3.4 | Monitor Cabinet Float Switch Status | H.2.5 | | | |
| | | | 5.13.1 | maxCabinetEnvironDevices | |
| | | | 5.13.2 | cabinetEnvironDevicesTable | |
| | | | 5.13.2.1 | cabinetEnvironDeviceNumber | |
| | | | 5.13.2.2 | cabinetEnvironDeviceType | |
| | | | 5.13.2.3 | cabinetEnvironDeviceIndex | |
| | | | 5.13.2.4 | cabinetEnvironDeviceDescription | |
| | | | 5.13.2.5 | cabinetEnvironDeviceOnStatus | |
| | | | 5.13.2.6 | cabinetEnvironDeviceErrorStatus | |
| 3.5.1.3.5 | Monitor ASC Temperature | H.2.5 | | | |
| | | | 5.13.3 | maxCabinetTempSensors | |
| | | | 5.13.4 | cabinetTempSensorStatusTable | |
| | | | 5.13.4.1 | cabinetTempSensorIndex | |
| | | | 5.13.4.2 | cabinetTempSensorDescription | |
| | | | 5.13.4.3 | cabinetTempSensorCurrentReading | |
| | | | 5.13.4.6 | cabinetTempSensorStatus | |

© 2023 AASHTO / ITE / NEMA Copy Per RTM Distribution Permission

| Requirements Traceability Matrix (RTM) | | | | | |
|---|---|---|---|---|---|
| **FR ID** | **Functional Requirement** | **Dialog ID** | **Object ID** | **Object Name** | **Additional Specifications** |
| 3.5.1.3.6 | Monitor ASC Humidity | H.2.5 | | | |
| | | | 5.13.5 | maxCabinetHumiditySensors | |
| | | | 5.13.6 | cabinetHumiditySensorStatusTable | |
| | | | 5.13.6.1 | cabinetHumiditySensorIndex | |
| | | | 5.13.6.2 | cabinetHumiditySensorDescription | |
| | | | 5.13.6.3 | cabinetHumiditySensorCurrentReading | |
| | | | 5.13.6.5 | cabinetHumiditySensorStatus | |
| 3.5.1.3.7 | Configure ASC Temperature Threshold | H.2.7 | | | |
| | | | 5.13.3 | maxCabinetTempSensors | |
| | | | 5.13.4 | cabinetTempSensorStatusTable | |
| | | | 5.13.4.1 | cabinetTempSensorIndex | |
| | | | 5.13.4.4 | cabinetTempSensorHighThreshold | |
| | | | 5.13.4.5 | cabinetTempSensorLowThreshold | |
| 3.5.1.3.8 | Configure ASC Humidity Thresholds | H.2.7 | | | |
| | | | 5.13.5 | maxCabinetHumiditySensors | |
| | | | 5.13.6 | cabinetHumiditySensorStatusTable | |
| | | | 5.13.6.1 | cabinetHumiditySensorIndex | |
| | | | 5.13.6.4 | cabinetHumidityThreshold | |
| 3.5.1.3.9 | Configure ATC Cabinet Device LEDs | G.3 | | | |
| | | | 5.13.9 | atccLEDMode | |
| 3.5.1.4 | Monitor Power Requirements | | | | |
| 3.5.1.4.1 | Determine Power Source | G.1 | | | |

Copy Per RTM Distribution Permission
© 2023 AASHTO / ITE / NEMA

| Requirements Traceability Matrix (RTM) | | | | | |
|---|---|---|---|---|---|
| **FR ID** | **Functional Requirement** | **Dialog ID** | **Object ID** | **Object Name** | **Additional Specifications** |
| | | | 5.13.7 | ascPowerSource | |
| 3.5.1.4.2 | Monitor AC Power Status | G.1 | | | |
| | | | 5.13.8 | ascLineVolts | |
| 3.5.1.4.3 | Monitor UPS Battery Charge | G.1 | | | |
| | | | RFC 1628 | upsEstimatedChargeRemaining | Note: Support for the object only, not the complete RFC1628. |
| 3.5.1.4.4 | Monitor UPS Battery Voltage | G.1 | | | |
| | | | RFC 1628 | upsBatteryVoltage | Note: Support for the object only, not the complete RFC1628. |
| 3.5.1.4.5 | Monitor UPS Battery Current | G.1 | | | |
| | | | RFC 1628 | upsBatteryCurrent | Note: Support for the object only, not the complete RFC1628. |
| 3.5.1.5 | Manage Operational Performance Data Requirements | | | | |
| 3.5.1.5.1 | Configure Operational Performance Data Requirements | | | | |
| 3.5.1.5.1.1 | Enable/Disable Collection of Operational Performance Data | H.2.7 | | | |
| | | | 1103v03 – A.10.1.7 | recConfigTable | |
| | | | 1103v03 – A.10.1.7.1 | recConfigID | |
| | | | 1103v03 – A.10.1.7.2 | recConfigClass | |
| | | | 1103v03 – A.10.1.7.3 | recConfigMode | |
| | | | 1103v03 – A.10.1.7.4 | recConfigCompareValue | |

© 2023 AASHTO / ITE / NEMA Copy Per RTM Distribution Permission

| Requirements Traceability Matrix (RTM) | | | | | |
|---|---|---|---|---|---|
| **FR ID** | **Functional Requirement** | **Dialog ID** | **Object ID** | **Object Name** | **Additional Specifications** |
| | | | 1103v03 – A.10.1.7.5 | recConfigCompareValue2 | |
| | | | 1103v03 – A.10.1.7.6 | recConfigCompareOID | |
| | | | 1103v03 – A.10.1.7.7 | recConfigRecordOID | |
| | | | 1103v03 – A.10.1.7.8 | recConfigTriggerPoint | |
| | | | 1103v03 – A.10.1.7.9 | recConfigSamplePeriod | |
| | | | 1103v03 – A.10.1.7.10 | recConfigSampleOID | |
| | | | 1103v03 – A.10.1.7.11 | recConfigNumEntries | |
| | | | 1103v03 – A.10.1.7.12 | recConfigAction | |
| 3.5.1.5.1.2 | Start Collection of Operational Performance Data on Specific Date/Time | H.2.7 | | | |
| | | | 1103v03 – A.10.1.7 | recConfigTable | |
| | | | 1103v03 – A.10.1.7.1 | recConfigID | |
| | | | 1103v03 – A.10.1.7.3 | recConfigMode | |
| | | | 1103v03 – A.10.1.7.4 | recConfigCompareValue | |
| | | | 1103v03 – A.10.1.7.5 | recConfigCompareValue2 | |
| | | | 1103v03 – A.10.1.7.6 | recConfigCompareOID | |

Copy Per RTM Distribution Permission © 2023 AASHTO / ITE / NEMA

| Requirements Traceability Matrix (RTM) | | | | | |
|---|---|---|---|---|---|
| **FR ID** | **Functional Requirement** | **Dialog ID** | **Object ID** | **Object Name** | **Additional Specifications** |
| 3.5.1.5.1.3 | End Collection of Operational Performance Data on Specific Date/Time | H.2.7 | | | |
| | | | 1103v03 – A.10.1.7 | recConfigTable | |
| | | | 1103v03 – A.10.1.7.1 | recConfigID | |
| | | | 1103v03 – A.10.1.7.3 | recConfigMode | |
| | | | 1103v03 – A.10.1.7.4 | recConfigCompareValue | |
| | | | 1103v03 – A.10.1.7.5 | recConfigCompareValue2 | |
| | | | 1103v03 – A.10.1.7.6 | recConfigCompareOID | |
| 3.5.1.5.1.4 | Configure Collection of Operational Performance Data | H.2.7 | | | |
| | | | 1103v03 – A.10.1.2 | recClassTable | |
| | | | 1103v03 – A.10.1.2.1 | recClassNumber | |
| | | | 1103v03 – A.10.1.2.2 | recClassLimit | |
| | | | 1103v03 – A.10.1.2.4 | recClassDescription | |
| | | | 1103v03 – A.10.1.7 | recConfigTable | |
| | | | 1103v03 – A.10.1.7.1 | recConfigID | |
| | | | 1103v03 – A.10.1.7.2 | recConfigClass | |

© 2023 AASHTO / ITE / NEMA Copy Per RTM Distribution Permission

| Requirements Traceability Matrix (RTM) | | | | | |
|---|---|---|---|---|---|
| **FR ID** | **Functional Requirement** | **Dialog ID** | **Object ID** | **Object Name** | **Additional Specifications** |
| | | | 1103v03 – A.10.1.7.3 | recConfigMode | |
| | | | 1103v03 – A.10.1.7.4 | recConfigCompareValue | |
| | | | 1103v03 – A.10.1.7.5 | recConfigCompareValue2 | |
| | | | 1103v03 – A.10.1.7.6 | recConfigCompareOID | |
| | | | 1103v03 – A.10.1.7.7 | recConfigRecordOID | |
| | | | 1103v03 – A.10.1.7.8 | recConfigTriggerPoint | |
| | | | 1103v03 – A.10.1.7.9 | recConfigSamplePeriod | |
| | | | 1103v03 – A.10.1.7.10 | recConfigSampleOID | |
| | | | 1103v03 – A.10.1.7.11 | recConfigNumEntries | |
| | | | 1103v03 – A.10.1.7.12 | recConfigAction | |
| 3.5.1.5.2 | Retrieve Operational Performance Data Configuration Requirements | | | | |
| 3.5.1.5.2.1 | Determine Collection of Operational Performance Data | H.2.5 | | | |
| | | | 1103v03 – A.10.1.3 | maxRecConfigs | |
| | | | 1103v03 – A.10.1.7 | recConfigTable | |
| | | | 1103v03 – A.10.1.7.1 | recConfigID | |

Copy Per RTM Distribution Permission
© 2023 AASHTO / ITE / NEMA

| Requirements Traceability Matrix (RTM) | | | | | |
|---|---|---|---|---|---|
| **FR ID** | **Functional Requirement** | **Dialog ID** | **Object ID** | **Object Name** | **Additional Specifications** |
| | | | 1103v03 – A.10.1.7.2 | recConfigClass | |
| | | | 1103v03 – A.10.1.7.13 | recConfigStatus | |
| 3.5.1.5.2.2 | Determine Operational Performance Data Collection Capabilities | G.1 | | | |
| | | | 1103v03 – A.10.1.1 | maxRecClasses | |
| | | | 1103v03 – A.10.1.3 | maxRecConfigs | |
| | | | 1103v03 – A.10.1.4 | recMinSamplePeriod | |
| | | | 1103v03 – A.10.1.5 | recMaxSamplePeriod | |
| | | | 1103v03 – A.10.1.6 | recSamplePeriodResolution | |
| | | | 1103v03 – A.10.1.8 | maxRecordings | |
| | | | 1103v03 – A.10.1.10 | maxRecEntries | |
| 3.5.1.5.3 | Retrieve Operational Performance Data Requirements | | | | |
| 3.5.1.5.3.1 | Monitor Operational Performance Data | H.2.5 | | | |
| | | | 1103v03 – A.10.1.11 | recEntriesTable | |
| | | | 1103v03 – A.10.1.11.1 | recEntryNumber | |
| | | | 1103v03 – A.10.1.11.2 | recSampleTime | |
| | | | 1103v03 – A.10.1.11.3 | recValue | |

© 2023 AASHTO / ITE / NEMA Copy Per RTM Distribution Permission

| Requirements Traceability Matrix (RTM) | | | | | |
|---|---|---|---|---|---|
| **FR ID** | **Functional Requirement** | **Dialog ID** | **Object ID** | **Object Name** | **Additional Specifications** |
| 3.5.1.5.3.2 | Retrieve Operational Performance Data | H.2.6 | | | |
| | | | 1103v03 – A.10.1.2 | recClassTable | |
| | | | 1103v03 – A.10.1.2.1 | recClassNumber | |
| | | | 1103v03 – A.10.1.2.5 | recClassNumRecordings | |
| | | | 1103v03 – A.10.1.2.6 | recClassRecordingCounter | |
| | | | 1103v03 – A.10.1.9 | recRecordingTable | |
| | | | 1103v03 – A.10.1.9.1 | recordingClass | |
| | | | 1103v03 – A.10.1.9.2 | recordingNumber | |
| | | | 1103v03 – A.10.1.9.3 | recordingID | |
| | | | 1103v03 – A.10.1.9.4 | recordingConfigID | |
| | | | 1103v03 – A.10.1.9.5 | recordingTriggerTime | |
| | | | 1103v03 – A.10.1.9.6 | recordingStatus | |
| | | | 1103v03 – A.10.1.9.7 | recordingTriggerRecNum | |
| | | | 1103v03 – A.10.1.9.8 | recordingNumEntries | |
| | | | 1103v03 – A.10.1.11 | recEntriesTable | |
| | | | 1103v03 – A.10.1.11.1 | recEntryNumber | |

Copy Per RTM Distribution Permission © 2023 AASHTO / ITE / NEMA

| Requirements Traceability Matrix (RTM) | | | | | |
|---|---|---|---|---|---|
| **FR ID** | **Functional Requirement** | **Dialog ID** | **Object ID** | **Object Name** | **Additional Specifications** |
| 3.5.1.5.3.3 | Retrieve Operational Performance Data—Time Range | H.2.5 | | | |
| | | | 1103v03 – A.10.1.8 | maxRecordings | |
| | | | 1103v03 – A.10.1.9 | recRecordingTable | |
| | | | 1103v03 – A.10.1.9.1 | recordingClass | |
| | | | 1103v03 – A.10.1.9.2 | recordingNumber | |
| | | | 1103v03 – A.10.1.9.3 | recordingID | |
| | | | 1103v03 – A.10.1.9.7 | recordingTriggerRecNum | |
| | | | 1103v03 – A.10.1.9.8 | recordingNumEntries | |
| | | | 1103v03 – A.10.1.11 | recEntriesTable | |
| | | | 1103v03 – A.10.1.11.1 | recEntryNumber | |
| 3.5.1.5.3.4 | Retrieve Operational Performance Data—Event Code | H.2.5 | | | |
| | | | 1103v03 – A.10.1.8 | maxRecordings | |
| | | | 1103v03 – A.10.1.9 | recRecordingTable | |
| | | | 1103v03 – A.10.1.9.1 | recordingClass | |
| | | | 1103v03 – A.10.1.9.2 | recordingNumber | |

© 2023 AASHTO / ITE / NEMA Copy Per RTM Distribution Permission

| Requirements Traceability Matrix (RTM) | | | | | |
|---|---|---|---|---|---|
| **FR ID** | **Functional Requirement** | **Dialog ID** | **Object ID** | **Object Name** | **Additional Specifications** |
| | | | 1103v03 – A.10.1.9.3 | recordingID | |
| | | | 1103v03 – A.10.1.9.7 | recordingTriggerRecNum | |
| | | | 1103v03 – A.10.1.9.8 | recordingNumEntries | |
| | | | 1103v03 – A.10.1.11 | recEntriesTable | |
| | | | 1103v03 – A.10.1.11.1 | recEntryNumber | |
| 3.5.1.5.4 | Clear Operational Performance Data Requirements | | | | |
| 3.5.1.5.4.1 | Clear Operational Performance Data—All | G.3 | | | |
| | | | 1103v03 – A.10.15 | recClearRecordingData | |
| 3.5.1.5.4.2 | Clear Operational Performance Data—Time Range | G.3 | | | |
| | | | 1103v03 – A.10.1.2.3 | recClassClearTime | |
| 3.5.1.5.4.3 | Clear Operational Performance Data—Event Code | G.3 | | | |
| | | | 1103v03 – A.10.14 | recClearConfigurations | |
| 3.5.1.5.4.4 | Clear Operational Performance Data—Event Class | G.3 | | | |
| | | | 1103v03 – A.10.13 | recClearClasses | |
| 3.5.1.5.4.5 | Clear Operational Performance Data—Configuration | G.3 | | | |
| | | | 1103v03 – A.10.14 | recClearConfigurations | |

Copy Per RTM Distribution Permission
© 2023 AASHTO / ITE / NEMA

| Requirements Traceability Matrix (RTM) | | | | | |
|---|---|---|---|---|---|
| **FR ID** | **Functional Requirement** | **Dialog ID** | **Object ID** | **Object Name** | **Additional Specifications** |
| 3.5.1.6 | Manage ASC Clock Requirements | | | | |
| 3.5.1.6.1 | Configure ASC Clock Source | G.3 | | | |
| | | | 5.4.22.3 | unitTimeSourceCommanded | |
| 3.5.1.6.2 | Determine ASC Clock Status | G.1 | | | |
| | | | 5.4.22.5 | unitTimeSourceStatus | |
| 3.5.1.6.3 | Determine Current ASC Clock Source | G.1 | | | |
| | | | 5.4.22.4 | unitTimeSourceCurrent | |
| 3.5.1.6.4 | Determine Available ASC Clock Sources | H.2.5 | | | |
| | | | 5.4.22.1 | maxTimeSources | |
| | | | 5.4.22.2 | unitTimeTable | |
| | | | 5.4.22.2.1 | unitTimeIndex | |
| | | | 5.4.22.2.2 | unitTimeSourceAvailable | |
| 3.5.2 | Manage Signal Operations Management Requirements | | | | |
| 3.5.2.1 | Manage Signal Configuration Requirements | | | | |
| 3.5.2.1.1 | Manage Unit Configuration Requirements | | | | |
| 3.5.2.1.1.1 | Manage Startup Requirements | | | | |
| 3.5.2.1.1.1.1 | Configure Startup All-Red Flash Mode | G.3 | | | |
| | | | 5.4.18 | unitStartUpFlashMode | |
| 3.5.2.1.1.1.2 | Configure Startup Flash Time | G.3 | | | |
| | | | 5.4.1 | unitStartUpFlash | |
| 3.5.2.1.1.1.3 | Enable/Disable Automatic Pedestrian Clearance Setting | G.3 | | | |
| | | | 5.4.2 | unitAutoPedestrianClear | |
| 3.5.2.1.1.2 | Configure Backup Time | G.3 | | | |
| | | | 5.4.3 | unitBackupTime | |
| 3.5.2.1.1.3 | Configure Backup Time—User-Defined | G.3 | | | |
| | | | 5.4.19 | unitUserDefinedBackupTime | |

© 2023 AASHTO / ITE / NEMA Copy Per RTM Distribution Permission

| Requirements Traceability Matrix (RTM) | | | | | |
|---|---|---|---|---|---|
| **FR ID** | **Functional Requirement** | **Dialog ID** | **Object ID** | **Object Name** | **Additional Specifications** |
| 3.5.2.1.1.4 | Configure Backup Time—User-Defined Functions | H.2.7 | | | |
| | | | 5.4.20 | maxUserDefinedBackupTimeContent | |
| | | | 5.4.21 | unitUserDefinedBackupTimeContentTable | |
| | | | 5.4.21.1 | unitUserDefinedBackupTimeContentNumber | |
| | | | 5.4.21.2 | unitUserDefinedBackupTimeContentOID | |
| | | | 5.4.21.3 | unitUserDefinedBackupTimeContentDescription | |
| 3.5.2.1.1.5 | Determine Maximum Number of Functions Supported for Backup Time | G.1 | | | |
| | | | 5.4.20 | maxUserDefinedBackupTimeContent | |
| 3.5.2.1.1.6 | Configure Parameters for Creation of an Alternate Device Configuration Identifier | 4.2.2 | | | |
| | | | 5.4.24 | maxGlobalSetIds | |
| | | | 5.4.25 | globalSetIdTable | |
| | | | 5.4.25.1 | globalSetIdNumber | |
| | | | 5.4.25.2 | globalSetIdOID | |
| 3.5.2.1.2 | Manage Phase Configuration Requirements | | | | |
| 3.5.2.1.2.1 | Configure Phases Requirements | | | | |
| 3.5.2.1.2.1.1 | Enable/Disable Phase | 4.2.2 | | | |
| | | | 5.2.2 | phaseTable | |
| | | | 5.2.2.1 | phaseNumber | |
| | | | 5.2.2.21 | phaseOptions | Bit 0 |
| 3.5.2.1.2.1.2 | Configure Vehicle Phase Minimum Green Time | H.2.7 | | | |

Copy Per RTM Distribution Permission
© 2023 AASHTO / ITE / NEMA

| Requirements Traceability Matrix (RTM) | | | | | |
|---|---|---|---|---|---|
| **FR ID** | **Functional Requirement** | **Dialog ID** | **Object ID** | **Object Name** | **Additional Specifications** |
| | | | 5.2.2 | phaseTable | |
| | | | 5.2.2.1 | phaseNumber | |
| | | | 5.2.2.4 | phaseMinimumGreen | |
| 3.5.2.1.2.1.3 | Configure Vehicle Phase Passage Time | H.2.7 | | | |
| | | | 5.2.2 | phaseTable | |
| | | | 5.2.2.1 | phaseNumber | |
| | | | 5.2.2.5 | phasePassage | |
| 3.5.2.1.2.1.4 | Configure Vehicle Phase Maximum Green Times | H.2.7 | | | |
| | | | 5.2.2 | phaseTable | |
| | | | 5.2.2.1 | phaseNumber | |
| | | | 5.2.2.6 | phaseMaximum1 | |
| | | | 5.2.2.7 | phaseMaximum2 | |
| 3.5.2.1.2.1.5 | Configure Vehicle Phase Third Maximum Green Times | H.2.7 | | | |
| | | | 5.2.2 | phaseTable | |
| | | | 5.2.2.1 | phaseNumber | |
| | | | 5.2.2.24 | phaseMaximum3 | |
| 3.5.2.1.2.1.6 | Configure Phase Yellow Time | H.2.7 | | | |
| | | | 5.2.2 | phaseTable | |
| | | | 5.2.2.1 | phaseNumber | |
| | | | 5.2.2.8 | phaseYellowChange | |
| 3.5.2.1.2.1.7 | Configure Red Clearance Time | H.2.7 | | | |
| | | | 5.2.2 | phaseTable | |
| | | | 5.2.2.1 | phaseNumber | |
| | | | 5.2.2.9 | phaseRedClear | |
| 3.5.2.1.2.1.8 | Configure Phase Red Revert Time | H.2.7 | | | |
| | | | 5.2.2 | phaseTable | |

© 2023 AASHTO / ITE / NEMA Copy Per RTM Distribution Permission

| Requirements Traceability Matrix (RTM) | | | | | |
|---|---|---|---|---|---|
| **FR ID** | **Functional Requirement** | **Dialog ID** | **Object ID** | **Object Name** | **Additional Specifications** |
| | | | 5.2.2.1 | phaseNumber | |
| | | | 5.2.2.10 | phaseRedRevert | |
| 3.5.2.1.2.1.9 | Configure Unit Red Revert Time | G.3 | | | |
| | | | 5.4.4 | unitRedRevert | |
| 3.5.2.1.2.1.10 | Configure Added Initial Time | H.2.7 | | | |
| | | | 5.2.2 | phaseTable | |
| | | | 5.2.2.1 | phaseNumber | |
| | | | 5.2.2.11 | phaseAddedInitial | |
| 3.5.2.1.2.1.11 | Configure Maximum Initial Time | H.2.7 | | | |
| | | | 5.2.2 | phaseTable | |
| | | | 5.2.2.1 | phaseNumber | |
| | | | 5.2.2.12 | phaseMaximumInitial | |
| 3.5.2.1.2.1.12 | Configure Time Before Reduction | H.2.7 | | | |
| | | | 5.2.2 | phaseTable | |
| | | | 5.2.2.1 | phaseNumber | |
| | | | 5.2.2.13 | phaseTimeBeforeReduction | |
| 3.5.2.1.2.1.13 | Configure Phase Time to Reduce | H.2.7 | | | |
| | | | 5.2.2 | phaseTable | |
| | | | 5.2.2.1 | phaseNumber | |
| | | | 5.2.2.15 | phaseTimeToReduce | |
| 3.5.2.1.2.1.14 | Configure Cars Before Reduction | H.2.7 | | | |
| | | | 5.2.2 | phaseTable | |
| | | | 5.2.2.1 | phaseNumber | |
| | | | 5.2.2.14 | phaseCarsBeforeReduction | |
| 3.5.2.1.2.1.15 | Configure Phase Reduce By Time | H.2.7 | | | |
| | | | 5.2.2 | phaseTable | |
| | | | 5.2.2.1 | phaseNumber | |
| | | | 5.2.2.16 | phaseReduceBy | |

Copy Per RTM Distribution Permission © 2023 AASHTO / ITE / NEMA

| Requirements Traceability Matrix (RTM) | | | | | |
|---|---|---|---|---|---|
| **FR ID** | **Functional Requirement** | **Dialog ID** | **Object ID** | **Object Name** | **Additional Specifications** |
| 3.5.2.1.2.1.16 | Configure Phase Minimum Gap Time | H.2.7 | | | |
| | | | 5.2.2 | phaseTable | |
| | | | 5.2.2.1 | phaseNumber | |
| | | | 5.2.2.17 | phaseMinimumGap | |
| 3.5.2.1.2.1.17 | Configure Phase Dynamic Maximum Limit | H.2.7 | | | |
| | | | 5.2.2 | phaseTable | |
| | | | 5.2.2.1 | phaseNumber | |
| | | | 5.2.2.18 | phaseDynamicMaxLimit | |
| 3.5.2.1.2.1.18 | Configure Phase Dynamic Maximum Step | H.2.7 | | | |
| | | | 5.2.2 | phaseTable | |
| | | | 5.2.2.1 | phaseNumber | |
| | | | 5.2.2.19 | phaseDynamicMaxStep | |
| 3.5.2.1.2.1.19 | Configure Phase Startup Requirements | | | | |
| 3.5.2.1.2.1.19.1 | Configure Phase Startup—Initialize in a Red State | 4.2.2 | | | |
| | | | 5.2.2 | phaseTable | |
| | | | 5.2.2.1 | phaseNumber | |
| | | | 5.2.2.20 | phaseStartup | phaseNotOn (2) |
| 3.5.2.1.2.1.19.2 | Configure Phase Startup—Initialize at Beginning of Min Green and Walk | 4.2.2 | | | |
| | | | 5.2.2 | phaseTable | |
| | | | 5.2.2.1 | phaseNumber | |
| | | | 5.2.2.20 | phaseStartup | greenWalk (3) |
| 3.5.2.1.2.1.19.3 | Configure Phase Startup—Initialize at Beginning of Min Green | 4.2.2 | | | |
| | | | 5.2.2 | phaseTable | |
| | | | 5.2.2.1 | phaseNumber | |
| | | | 5.2.2.20 | phaseStartup | greenNoWalk (4) |

© 2023 AASHTO / ITE / NEMA Copy Per RTM Distribution Permission

| Requirements Traceability Matrix (RTM) | | | | | |
|---|---|---|---|---|---|
| **FR ID** | **Functional Requirement** | **Dialog ID** | **Object ID** | **Object Name** | **Additional Specifications** |
| 3.5.2.1.2.1.19.4 | Configure Phase Startup—Initialize at Beginning of Yellow | 4.2.2 | | | |
| | | | 5.2.2 | phaseTable | |
| | | | 5.2.2.1 | phaseNumber | |
| | | | 5.2.2.20 | phaseStartup | yellowChange (5) |
| 3.5.2.1.2.1.19.5 | Configure Phase Startup—Initialize at Beginning of Red Clearance | 4.2.2 | | | |
| | | | 5.2.2 | phaseTable | |
| | | | 5.2.2.1 | phaseNumber | |
| | | | 5.2.2.20 | phaseStartup | redClear (6) |
| 3.5.2.1.2.1.20 | Configure Automatic Flash Entry Phase | 4.2.2 | | | |
| | | | 5.2.2 | phaseTable | |
| | | | 5.2.2.1 | phaseNumber | |
| | | | 5.2.2.21 | phaseOptions | Bit 1 |
| 3.5.2.1.2.1.21 | Configure Automatic Flash Exit Phase | 4.2.2 | | | |
| | | | 5.2.2 | phaseTable | |
| | | | 5.2.2.1 | phaseNumber | |
| | | | 5.2.2.21 | phaseOptions | Bit 2 |
| 3.5.2.1.2.1.22 | Configure Call to Non-Actuated 1 | 4.2.2 | | | |
| | | | 5.2.2 | phaseTable | |
| | | | 5.2.2.1 | phaseNumber | |
| | | | 5.2.2.21 | phaseOptions | Bit 3 |
| 3.5.2.1.2.1.23 | Configure Call to Non-Actuated 2 | 4.2.2 | | | |
| | | | 5.2.2 | phaseTable | |
| | | | 5.2.2.1 | phaseNumber | |
| | | | 5.2.2.21 | phaseOptions | Bit 4 |
| 3.5.2.1.2.1.24 | Configure Non-Lock Detector Memory | 4.2.2 | | | |
| | | | 5.2.2 | phaseTable | |

Copy Per RTM Distribution Permission © 2023 AASHTO / ITE / NEMA

| Requirements Traceability Matrix (RTM) | | | | | |
|---|---|---|---|---|---|
| **FR ID** | **Functional Requirement** | **Dialog ID** | **Object ID** | **Object Name** | **Additional Specifications** |
| | | | 5.2.2.1 | phaseNumber | |
| | | | 5.2.2.21 | phaseOptions | Bit 5 |
| 3.5.2.1.2.1.25 | Configure Minimum Vehicle Recall | 4.2.2 | | | |
| | | | 5.2.2 | phaseTable | |
| | | | 5.2.2.1 | phaseNumber | |
| | | | 5.2.2.21 | phaseOptions | Bit 6 |
| 3.5.2.1.2.1.26 | Configure Maximum Vehicle Recall | 4.2.2 | | | |
| | | | 5.2.2 | phaseTable | |
| | | | 5.2.2.1 | phaseNumber | |
| | | | 5.2.2.21 | phaseOptions | Bit 7 |
| 3.5.2.1.2.1.27 | Configure Soft Vehicle Recall | 4.2.2 | | | |
| | | | 5.2.2 | phaseTable | |
| | | | 5.2.2.1 | phaseNumber | |
| | | | 5.2.2.21 | phaseOptions | Bit 9 |
| 3.5.2.1.2.1.28 | Configure Dual Phase Entry | 4.2.2 | | | |
| | | | 5.2.2 | phaseTable | |
| | | | 5.2.2.1 | phaseNumber | |
| | | | 5.2.2.21 | phaseOptions | Bit 10 |
| 3.5.2.1.2.1.29 | Configure Simultaneous Gap Disable | 4.2.2 | | | |
| | | | 5.2.2 | phaseTable | |
| | | | 5.2.2.1 | phaseNumber | |
| | | | 5.2.2.21 | phaseOptions | Bit 11 |
| 3.5.2.1.2.1.30 | Configure Guaranteed Passage | 4.2.2 | | | |
| | | | 5.2.2 | phaseTable | |
| | | | 5.2.2.1 | phaseNumber | |
| | | | 5.2.2.21 | phaseOptions | Bit 12 |
| 3.5.2.1.2.1.31 | Configure Actuated Rest-in-Walk | 4.2.2 | | | |
| | | | 5.2.2 | phaseTable | |

© 2023 AASHTO / ITE / NEMA Copy Per RTM Distribution Permission

| Requirements Traceability Matrix (RTM) | | | | | |
|---|---|---|---|---|---|
| **FR ID** | **Functional Requirement** | **Dialog ID** | **Object ID** | **Object Name** | **Additional Specifications** |
| | | | 5.2.2.1 | phaseNumber | |
| | | | 5.2.2.21 | phaseOptions | Bit 13 |
| 3.5.2.1.2.1.32 | Configure Conditional Service Enable | 4.2.2 | | | |
| | | | 5.2.2 | phaseTable | |
| | | | 5.2.2.1 | phaseNumber | |
| | | | 5.2.2.21 | phaseOptions | Bit 14 |
| 3.5.2.1.2.1.33 | Configure Added Initial Calculation | 4.2.2 | | | |
| | | | 5.2.2 | phaseTable | |
| | | | 5.2.2.1 | phaseNumber | |
| | | | 5.2.2.21 | phaseOptions | Bit 15 |
| 3.5.2.1.2.1.34 | Configure Phase-to-Ring Association | 4.2.2 | | | |
| | | | 5.2.2 | phaseTable | |
| | | | 5.2.2.1 | phaseNumber | |
| | | | 5.2.2.22 | phaseRing | |
| 3.5.2.1.2.1.35 | Configure Phase Concurrency | 4.2.2 | | | |
| | | | 5.2.2 | phaseTable | |
| | | | 5.2.2.1 | phaseNumber | |
| | | | 5.2.2.23 | phaseConcurrency | |
| 3.5.2.1.2.1.36 | Configure Yellow Change Time Before End of Ped Clearance | H.2.7 | | | |
| | | | 5.2.2 | phaseTable | |
| | | | 5.2.2.1 | phaseNumber | |
| | | | 5.2.2.25 | phaseYellowandRedChangeTimeBeforeEndPedClear | |
| 3.5.2.1.2.1.37 | Enable/Disable Ped-Only Phase | 4.2.2 | | | |
| | | | 5.2.2 | phaseTable | |
| | | | 5.2.2.1 | phaseNumber | |
| | | | 5.2.2.21 | phaseOptions | Bit 0 |

Copy Per RTM Distribution Permission
© 2023 AASHTO / ITE / NEMA

| Requirements Traceability Matrix (RTM) | | | | | |
|---|---|---|---|---|---|
| **FR ID** | **Functional Requirement** | **Dialog ID** | **Object ID** | **Object Name** | **Additional Specifications** |
| 3.5.2.1.2.1.38 | Configure Pedestrian Green Time | H.2.7 | | | |
| | | | 5.2.2 | phaseTable | |
| | | | 5.2.2.1 | phaseNumber | |
| | | | 5.2.2.2 | phaseWalk | |
| 3.5.2.1.2.1.39 | Configure Pedestrian Clearance Time | H.2.7 | | | |
| | | | 5.2.2 | phaseTable | |
| | | | 5.2.2.1 | phaseNumber | |
| | | | 5.2.2.3 | phasePedestrianClear | |
| 3.5.2.1.2.1.40 | Configure Ped Phase Walk Recycle Time | H.2.7 | | | |
| | | | 5.2.2 | phaseTable | |
| | | | 5.2.2.1 | phaseNumber | |
| | | | 5.2.2.26 | phasePedWalkService | |
| 3.5.2.1.2.1.41 | Configure Ped Phase Don't Walk Revert Time | H.2.7 | | | |
| | | | 5.2.2 | phaseTable | |
| | | | 5.2.2.1 | phaseNumber | |
| | | | 5.2.2.27 | phaseDontWalkRevert | |
| 3.5.2.1.2.1.42 | Configure Non-Lock Ped Detector Memory | 4.2.2 | | | |
| | | | 5.2.2 | phaseTable | |
| | | | 5.2.2.1 | phaseNumber | |
| | | | 5.2.2.21 | phaseOptions | Bit 5 |
| 3.5.2.1.2.1.43 | Configure Pedestrian Recall | 4.2.2 | | | |
| | | | 5.2.2 | phaseTable | |
| | | | 5.2.2.1 | phaseNumber | |
| | | | 5.2.2.21 | phaseOptions | Bit 8 |
| 3.5.2.1.2.1.44 | Configure Alternate Pedestrian Clearance Time | H.2.7 | | | |
| | | | 5.2.2 | phaseTable | |

© 2023 AASHTO / ITE / NEMA Copy Per RTM Distribution Permission

| Requirements Traceability Matrix (RTM) | | | | | |
|---|---|---|---|---|---|
| **FR ID** | **Functional Requirement** | **Dialog ID** | **Object ID** | **Object Name** | **Additional Specifications** |
| | | | 5.2.2.1 | phaseNumber | |
| | | | 5.2.2.28 | phasePedAlternateClearance | |
| 3.5.2.1.2.1.45 | Configure Alternate Pedestrian Walk Time | H.2.7 | | | |
| | | | 5.2.2 | phaseTable | |
| | | | 5.2.2.1 | phaseNumber | |
| | | | 5.2.2.29 | phasePedAlternateWalk | |
| 3.5.2.1.2.1.46 | Configure Vehicle Phase Walk Offset Time | H.2.7 | | | |
| | | | 5.2.2 | phaseTable | |
| | | | 5.2.2.1 | phaseNumber | |
| | | | 5.2.2.30 | phasePedAdvanceWalkTime | |
| | | | 5.2.2.31 | phasePedDelayTime | |
| 3.5.2.1.2.1.47 | Configure Advanced Green Warning—Associated Vehicle Phase | H.2.7 | | | See Requirement 3.5.2.1.11.1.2.3.3, Object ID 5.14.10, ascIOmapOutputFunctions – advWarnGrn (4) |
| | | | 5.2.2 | phaseTable | |
| | | | 5.2.2.1 | phaseNumber | |
| | | | 5.2.2.32 | phaseAdvWarnGrnStartTime | |
| 3.5.2.1.2.1.48 | Configure Advanced Green Warning—Start Delay Time | H.2.7 | | | |
| | | | 5.2.2 | phaseTable | |
| | | | 5.2.2.1 | phaseNumber | |
| | | | 5.2.2.32 | phaseAdvWarnGrnStartTime | |
| 3.5.2.1.2.1.49 | Configure Advanced Red Warning—Associated Vehicle Phase | H.2.7 | | | See Requirement 3.5.2.1.11.1.2.3.3, Object ID 5.14.10, ascIOmapOutputFunctions – advWarnRed (5) |
| | | | 5.2.2 | phaseTable | |

Copy Per RTM Distribution Permission
© 2023 AASHTO / ITE / NEMA

| Requirements Traceability Matrix (RTM) | | | | | |
|---|---|---|---|---|---|
| **FR ID** | **Functional Requirement** | **Dialog ID** | **Object ID** | **Object Name** | **Additional Specifications** |
| | | | 5.2.2.1 | phaseNumber | |
| | | | 5.2.2.33 | phaseAdvWarnRedStartTime | |
| 3.5.2.1.2.1.50 | Configure Red Indication Advanced Warning—Start Delay Time | H.2.7 | | | |
| | | | 5.2.2 | phaseTable | |
| | | | 5.2.2.1 | phaseNumber | |
| | | | 5.2.2.33 | phaseAdvWarnRedStartTime | |
| 3.5.2.1.2.1.51 | Configure Flashing Yellow Arrow Associated Vehicle Phase | 4.2.2 | | | |
| | | | 5.10.2 | overlapTable | |
| | | | 5.10.2.1 | overlapNumber | |
| | | | 5.10.2.2 | overlapType | |
| | | | 5.10.2.3 | overlapIncludedPhases | |
| | | | 5.10.2.4 | overlapModifierPhases | |
| 3.5.2.1.2.1.52 | Configure Flashing Red Arrow Associated Vehicle Phase | 4.2.2 | | | |
| | | | 5.10.2 | overlapTable | |
| | | | 5.10.2.1 | overlapNumber | |
| | | | 5.10.2.2 | overlapType | |
| | | | 5.10.2.3 | overlapIncludedPhases | |
| | | | 5.10.2.4 | overlapModifierPhases | |
| 3.5.2.1.2.1.53 | Configure Bicycle Phase Minimum Green Time | H.2.7 | | | |
| | | | 5.2.2 | phaseTable | |
| | | | 5.2.2.1 | phaseNumber | |
| | | | 5.2.2.4 | phaseMinimumGreen | |
| 3.5.2.1.2.1.54 | Configure Bicycle Phase Yellow Time | H.2.7 | | | |
| | | | 5.2.2 | phaseTable | |
| | | | 5.2.2.1 | phaseNumber | |

© 2023 AASHTO / ITE / NEMA Copy Per RTM Distribution Permission

| Requirements Traceability Matrix (RTM) | | | | | |
|---|---|---|---|---|---|
| **FR ID** | **Functional Requirement** | **Dialog ID** | **Object ID** | **Object Name** | **Additional Specifications** |
| | | | 5.2.2.8 | phaseYellowChange | |
| 3.5.2.1.2.1.55 | Configure Bicycle Phase Red Clearance Time | H.2.7 | | | |
| | | | 5.2.2 | phaseTable | |
| | | | 5.2.2.1 | phaseNumber | |
| | | | 5.2.2.9 | phaseRedClear | |
| 3.5.2.1.2.1.56 | Configure Bicycle Phase Red Revert Time | H.2.7 | | | |
| | | | 5.2.2 | phaseTable | |
| | | | 5.2.2.1 | phaseNumber | |
| | | | 5.2.2.10 | phaseRedRevert | |
| 3.5.2.1.2.1.57 | Enable/Disable Bicycle Phase | 4.2.2 | | | |
| | | | 5.2.2 | phaseTable | |
| | | | 5.2.2.1 | phaseNumber | |
| | | | 5.2.2.21 | phaseOptions | Bit 0 |
| 3.5.2.1.2.1.58 | Configure Non-Lock Bicycle Detector Memory | 4.2.2 | | | |
| | | | 5.2.2 | phaseTable | |
| | | | 5.2.2.1 | phaseNumber | |
| | | | 5.2.2.21 | phaseOptions | Bit 5 |
| 3.5.2.1.2.1.59 | Configure Bicycle Phase Recall | 4.2.2 | | | |
| | | | 5.2.2 | phaseTable | |
| | | | 5.2.2.1 | phaseNumber | |
| | | | 5.2.2.21 | phaseOptions | Bit 6 |
| 3.5.2.1.2.1.60 | Configure Soft Bicycle Phase Recall | 4.2.2 | | | |
| | | | 5.2.2 | phaseTable | |
| | | | 5.2.2.1 | phaseNumber | |
| | | | 5.2.2.21 | phaseOptions | Bit 9 |
| 3.5.2.1.2.1.61 | Configure Bicycle Phase-to-Ring Association | 4.2.2 | | | |
| | | | 5.2.2 | phaseTable | |

Copy Per RTM Distribution Permission
© 2023 AASHTO / ITE / NEMA

| Requirements Traceability Matrix (RTM) | | | | | |
|---|---|---|---|---|---|
| **FR ID** | **Functional Requirement** | **Dialog ID** | **Object ID** | **Object Name** | **Additional Specifications** |
| | | | 5.2.2.1 | phaseNumber | |
| | | | 5.2.2.22 | phaseRing | |
| 3.5.2.1.2.1.62 | Configure Bicycle Phase Concurrency | 4.2.2 | | | |
| | | | 5.2.2 | phaseTable | |
| | | | 5.2.2.1 | phaseNumber | |
| | | | 5.2.2.23 | phaseConcurrency | |
| 3.5.2.1.2.1.63 | Configure Transit Phase Minimum Green Time | H.2.7 | | | |
| | | | 5.2.2 | phaseTable | |
| | | | 5.2.2.1 | phaseNumber | |
| | | | 5.2.2.4 | phaseMinimumGreen | |
| 3.5.2.1.2.1.64 | Configure Transit Phase Maximum Green Time | H.2.7 | | | |
| | | | 5.2.2 | phaseTable | |
| | | | 5.2.2.1 | phaseNumber | |
| | | | 5.2.2.6 | phaseMaximum1 | |
| | | | 5.2.2.7 | phaseMaximum2 | |
| 3.5.2.1.2.1.65 | Configure Transit Phase Third Maximum Green Time | H.2.7 | | | |
| | | | 5.2.2 | phaseTable | |
| | | | 5.2.2.1 | phaseNumber | |
| | | | 5.2.2.24 | phaseMaximum3 | |
| 3.5.2.1.2.1.66 | Configure Transit Phase Yellow Time | H.2.7 | | | |
| | | | 5.2.2 | phaseTable | |
| | | | 5.2.2.1 | phaseNumber | |
| | | | 5.2.2.8 | phaseYellowChange | |
| 3.5.2.1.2.1.67 | Configure Transit Phase Red Clearance Time | H.2.7 | | | |
| | | | 5.2.2 | phaseTable | |

© 2023 AASHTO / ITE / NEMA Copy Per RTM Distribution Permission

| Requirements Traceability Matrix (RTM) | | | | | |
|---|---|---|---|---|---|
| **FR ID** | **Functional Requirement** | **Dialog ID** | **Object ID** | **Object Name** | **Additional Specifications** |
| | | | 5.2.2.1 | phaseNumber | |
| | | | 5.2.2.9 | phaseRedClear | |
| 3.5.2.1.2.1.68 | Configure Transit Phase Red Revert Time | H.2.7 | | | |
| | | | 5.2.2 | phaseTable | |
| | | | 5.2.2.1 | phaseNumber | |
| | | | 5.2.2.10 | phaseRedRevert | |
| 3.5.2.1.2.1.69 | Configure Transit Phase Added Initial Time | H.2.7 | | | |
| | | | 5.2.2 | phaseTable | |
| | | | 5.2.2.1 | phaseNumber | |
| | | | 5.2.2.11 | phaseAddedInitial | |
| 3.5.2.1.2.1.70 | Configure Transit Phase Maximum Initial Time | H.2.7 | | | |
| | | | 5.2.2 | phaseTable | |
| | | | 5.2.2.1 | phaseNumber | |
| | | | 5.2.2.12 | phaseMaximumInitial | |
| 3.5.2.1.2.1.71 | Enable/Disable Transit Phase | 4.2.2 | | | |
| | | | 5.2.2 | phaseTable | |
| | | | 5.2.2.1 | phaseNumber | |
| | | | 5.2.2.21 | phaseOptions | Bit 0 |
| 3.5.2.1.2.1.72 | Configure Non-Lock Transit Detector Memory | 4.2.2 | | | |
| | | | 5.2.2 | phaseTable | |
| | | | 5.2.2.1 | phaseNumber | |
| | | | 5.2.2.21 | phaseOptions | Bit 5 |
| 3.5.2.1.2.1.73 | Configure Transit Phase Recall | 4.2.2 | | | |
| | | | 5.2.2 | phaseTable | |
| | | | 5.2.2.1 | phaseNumber | |
| | | | 5.2.2.21 | phaseOptions | Bit 6 |
| 3.5.2.1.2.1.74 | Configure Soft Transit Phase Recall | 4.2.2 | | | |

Copy Per RTM Distribution Permission
© 2023 AASHTO / ITE / NEMA

| Requirements Traceability Matrix (RTM) | | | | | |
|---|---|---|---|---|---|
| **FR ID** | **Functional Requirement** | **Dialog ID** | **Object ID** | **Object Name** | **Additional Specifications** |
| | | | 5.2.2 | phaseTable | |
| | | | 5.2.2.1 | phaseNumber | |
| | | | 5.2.2.21 | phaseOptions | Bit 9 |
| 3.5.2.1.2.1.75 | Configure Dual Transit Phase Entry | 4.2.2 | | | |
| | | | 5.2.2 | phaseTable | |
| | | | 5.2.2.1 | phaseNumber | |
| | | | 5.2.2.21 | phaseOptions | Bit 10 |
| 3.5.2.1.2.1.76 | Configure Transit Phase-to-Ring Association | 4.2.2 | | | |
| | | | 5.2.2 | phaseTable | |
| | | | 5.2.2.1 | phaseNumber | |
| | | | 5.2.2.22 | phaseRing | |
| 3.5.2.1.2.1.77 | Configure Transit Phase Concurrency | 4.2.2 | | | |
| | | | 5.2.2 | phaseTable | |
| | | | 5.2.2.1 | phaseNumber | |
| | | | 5.2.2.23 | phaseConcurrency | |
| 3.5.2.1.2.1.78 | Enable/Disable Vehicle Phase Omit | H.2.7 | | | |
| | | | 5.2.5 | phaseControlGroupTable | |
| | | | 5.2.5.1 | phaseControlGroupNumber | |
| | | | 5.2.5.2 | phaseControlGroupPhaseOmit | |
| 3.5.2.1.2.1.79 | Enable/Disable Vehicle Phase Omit During Transition | H.2.7 | | | |
| | | | 5.5.9 | splitTable | |
| | | | 5.5.9.1 | splitNumber | |
| | | | 5.5.9.2 | splitPhase | |
| | | | 5.5.9.6 | splitOptions | Bit 0 |
| 3.5.2.1.2.1.80 | Enable/Disable Ped-Only Phase Omit | H.2.7 | | | |
| | | | 5.2.5 | phaseControlGroupTable | |

© 2023 AASHTO / ITE / NEMA Copy Per RTM Distribution Permission

| Requirements Traceability Matrix (RTM) | | | | | |
|---|---|---|---|---|---|
| **FR ID** | **Functional Requirement** | **Dialog ID** | **Object ID** | **Object Name** | **Additional Specifications** |
| | | | 5.2.5.1 | phaseControlGroupNumber | |
| | | | 5.2.5.3 | phaseControlGroupPedOmit | |
| 3.5.2.1.2.1.81 | Enable/Disable Ped-Only Phase Omit During Transition | H.2.7 | | | |
| | | | 5.5.9 | splitTable | |
| | | | 5.5.9.1 | splitNumber | |
| | | | 5.5.9.2 | splitPhase | |
| | | | 5.5.9.6 | splitOptions | Bit 0 |
| 3.5.2.1.2.1.82 | Enable/Disable Bicycle-Only Phase Omit | H.2.7 | | | |
| | | | 5.2.5 | phaseControlGroupTable | |
| | | | 5.2.5.1 | phaseControlGroupNumber | |
| | | | 5.2.5.2 | phaseControlGroupPhaseOmit | |
| 3.5.2.1.2.1.83 | Enable/Disable Bicycle-Only Phase Omit During Transition | H.2.7 | | | |
| | | | 5.5.9 | splitTable | |
| | | | 5.5.9.1 | splitNumber | |
| | | | 5.5.9.2 | splitPhase | |
| | | | 5.5.9.6 | splitOptions | Bit 0 |
| 3.5.2.1.2.1.84 | Enable/Disable Transit Phase Omit | H.2.7 | | | |
| | | | 5.2.5 | phaseControlGroupTable | |
| | | | 5.2.5.1 | phaseControlGroupNumber | |
| | | | 5.2.5.2 | phaseControlGroupPhaseOmit | |
| 3.5.2.1.2.1.85 | Enable/Disable Transit Phase Omit During Transition | H.2.7 | | | |
| | | | 5.5.9 | splitTable | |
| | | | 5.5.9.1 | splitNumber | |
| | | | 5.5.9.2 | splitPhase | |

Copy Per RTM Distribution Permission
© 2023 AASHTO / ITE / NEMA

| Requirements Traceability Matrix (RTM) | | | | | |
|---|---|---|---|---|---|
| **FR ID** | **Functional Requirement** | **Dialog ID** | **Object ID** | **Object Name** | **Additional Specifications** |
| | | | 5.5.9.6 | splitOptions | Bit 0 |
| 3.5.2.1.2.1.86 | Configure Alternate Minimum Vehicle Green Time During Transition | H.2.7 | | | |
| | | | 5.2.2 | phaseTable | |
| | | | 5.2.2.1 | phaseNumber | |
| | | | 5.2.2.34 | phaseAltMinTimeTransition | |
| 3.5.2.1.2.1.87 | Configure Alternate Minimum Pedestrian Walk Time During Transition | H.2.7 | | | |
| | | | 5.2.2 | phaseTable | |
| | | | 5.2.2.1 | phaseNumber | |
| | | | 5.2.2.34 | phaseAltMinTimeTransition | |
| 3.5.2.1.2.1.88 | Configure Alternate Minimum Bicycle Green Time During Transition | H.2.7 | | | |
| | | | 5.2.2 | phaseTable | |
| | | | 5.2.2.1 | phaseNumber | |
| | | | 5.2.2.34 | phaseAltMinTimeTransition | |
| 3.5.2.1.2.1.89 | Configure Alternate Minimum Transit Green Time During Transition | H.2.7 | | | |
| | | | 5.2.2 | phaseTable | |
| | | | 5.2.2.1 | phaseNumber | |
| | | | 5.2.2.34 | phaseAltMinTimeTransition | |
| 3.5.2.1.2.1.90 | Configure Phase Force Mode for Coordination Requirements | | | | |
| 3.5.2.1.2.1.90.1 | Configure Phase-Level Force Mode for Coordination—Floating | G.3 | | | |
| | | | 5.5.4 | coordForceMode | Value = floating (2) |
| 3.5.2.1.2.1.90.2 | Configure Phase-Level Force Mode for Coordination—Fixed | G.3 | | | |
| | | | 5.5.4 | coordForceMode | Value = fixed (3) |

© 2023 AASHTO / ITE / NEMA Copy Per RTM Distribution Permission

| Requirements Traceability Matrix (RTM) | | | | | |
|---|---|---|---|---|---|
| **FR ID** | **Functional Requirement** | **Dialog ID** | **Object ID** | **Object Name** | **Additional Specifications** |
| 3.5.2.1.2.2 | Retrieve Phase Configuration Requirements | | | | |
| 3.5.2.1.2.2.1 | Determine Maximum Number of Phases | G.1 | | | |
| | | | 5.2.1 | maxPhases | |
| 3.5.2.1.3 | Manage Coordination Configuration Requirements | | | | |
| 3.5.2.1.3.1 | Configure Operational Mode for Coordination Requirements | | | | |
| 3.5.2.1.3.1.1 | Configure Operational Mode for Coordination—Automatic | G.3 | | | |
| | | | 5.5.1 | coordOperationalMode | Value = 0 |
| 3.5.2.1.3.1.2 | Configure Operational Mode for Coordination—Manual Pattern | G.3 | | | |
| | | | 5.5.1 | coordOperationalMode | |
| 3.5.2.1.3.1.3 | Configure Operational Mode for Coordination—Manual Free | G.3 | | | |
| | | | 5.5.1 | coordOperationalMode | Value = 254 |
| 3.5.2.1.3.1.4 | Configure Operational Mode for Coordination—Manual Flash | G.3 | | | |
| | | | 5.5.1 | coordOperationalMode | Value = 255 |
| 3.5.2.1.3.2 | Configure Correction Mode for Coordination Requirements | | | | |
| 3.5.2.1.3.2.1 | Configure Correction Mode for Coordination—Dwell | G.3 | | | |
| | | | 5.5.2 | coordCorrectionMode | Value = dwell (2) |
| 3.5.2.1.3.2.2 | Configure Correction Mode for Coordination—Shortway | G.3 | | | |
| | | | 5.5.2 | coordCorrectionMode | Value = shortway (3) |
| 3.5.2.1.3.2.3 | Configure Correction Mode for Coordination—AddOnly | G.3 | | | |
| | | | 5.5.2 | coordCorrectionMode | Value = addOnly (4) |

Copy Per RTM Distribution Permission © 2023 AASHTO / ITE / NEMA

| Requirements Traceability Matrix (RTM) | | | | | |
|---|---|---|---|---|---|
| **FR ID** | **Functional Requirement** | **Dialog ID** | **Object ID** | **Object Name** | **Additional Specifications** |
| 3.5.2.1.3.2.4 | Configure Correction Mode for Coordination—SubtractOnly | G.3 | | | |
| | | | 5.5.2 | coordCorrectionMode | Value = subtractOnly (5) |
| 3.5.2.1.3.3 | Configure Maximum Mode for Coordination Requirements | | | | |
| 3.5.2.1.3.3.1 | Configure Correction Mode for Coordination—Maximum 1 | G.3 | | | |
| | | | 5.5.3 | coordMaximumMode | Value = maximum1 (2) |
| 3.5.2.1.3.3.2 | Configure Correction Mode for Coordination—Maximum 2 | G.3 | | | |
| | | | 5.5.3 | coordMaximumMode | Value = maximum2 (3) |
| 3.5.2.1.3.3.3 | Configure Correction Mode for Coordination—Maximum Inhibit | G.3 | | | |
| | | | 5.5.3 | coordMaximumMode | Value = maxInhibit (4) |
| 3.5.2.1.3.3.4 | Configure Correction Mode for Coordination—Maximum 3 | G.3 | | | |
| | | | 5.5.3 | coordMaximumMode | Value = maximum3 (5) |
| 3.5.2.1.3.4 | Configure Unit-Level Force Mode for Coordination Requirements | | | | |
| 3.5.2.1.3.4.1 | Configure Unit-Level Force Mode for Coordination—Floating | G.3 | | | |
| | | | 5.5.4 | coordForceMode | Value = floating (2) |
| 3.5.2.1.3.4.2 | Configure Unit-Level Force Mode for Coordination—Fixed | G.3 | | | |
| | | | 5.5.4 | coordForceMode | Value = fixed (3) |
| 3.5.2.1.3.5 | Configure Unit Coordination Point Requirements | | | | |
| 3.5.2.1.3.5.1 | Configure Unit Coordination Point—First Phase Green Begin | G.3 | | | |
| | | | 5.5.16 | unitCoordSyncPoint | |

© 2023 AASHTO / ITE / NEMA Copy Per RTM Distribution Permission

| Requirements Traceability Matrix (RTM) | | | | | |
|---|---|---|---|---|---|
| **FR ID** | **Functional Requirement** | **Dialog ID** | **Object ID** | **Object Name** | **Additional Specifications** |
| 3.5.2.1.3.5.2 | Configure Unit Coordination Point—Last Phase Green Begin | G.3 | | | |
| | | | 5.5.16 | unitCoordSyncPoint | |
| 3.5.2.1.3.5.3 | Configure Unit Coordination Point—First Phase Green End | G.3 | | | |
| | | | 5.5.16 | unitCoordSyncPoint | |
| 3.5.2.1.3.5.4 | Configure Unit Coordination Point—Last Phase Green End | G.3 | | | |
| | | | 5.5.16 | unitCoordSyncPoint | |
| 3.5.2.1.3.5.5 | Configure Unit Coordination Point—First Phase Yellow End | G.3 | | | |
| | | | 5.5.16 | unitCoordSyncPoint | |
| 3.5.2.1.3.5.6 | Configure Unit Coordination Point—Last Phase Yellow End | G.3 | | | |
| | | | 5.5.16 | unitCoordSyncPoint | |
| 3.5.2.1.3.6 | Configure Coordination Point Requirements | | | | |
| 3.5.2.1.3.6.1 | Configure Coordination Point—First Phase Green Begin | H.2.7 | | | |
| | | | 5.5.7 | patternTable | |
| | | | 5.5.7.1 | patternNumber | |
| | | | 5.5.7.6 | patternCoordSyncPoint | Value = firstCoordPhsGrnBegin (2) |
| 3.5.2.1.3.6.2 | Configure Coordination Point—Last Phase Green Begin | H.2.7 | | | |
| | | | 5.5.7 | patternTable | |
| | | | 5.5.7.1 | patternNumber | |
| | | | 5.5.7.6 | patternCoordSyncPoint | Value = lastCoordPhsGrnBegin (3) |

Copy Per RTM Distribution Permission
© 2023 AASHTO / ITE / NEMA

| Requirements Traceability Matrix (RTM) | | | | | |
|---|---|---|---|---|---|
| **FR ID** | **Functional Requirement** | **Dialog ID** | **Object ID** | **Object Name** | **Additional Specifications** |
| 3.5.2.1.3.6.3 | Configure Coordination Point—First Phase Green End | H.2.7 | | | |
| | | | 5.5.7 | patternTable | |
| | | | 5.5.7.1 | patternNumber | |
| | | | 5.5.7.6 | patternCoordSyncPoint | Value = firstCoordPhsGrnEnd (4) |
| 3.5.2.1.3.6.4 | Configure Coordination Point—Last Phase Green End | H.2.7 | | | |
| | | | 5.5.7 | patternTable | |
| | | | 5.5.7.1 | patternNumber | |
| | | | 5.5.7.6 | patternCoordSyncPoint | Value = lastCoordPhsGrnEnd (5) |
| 3.5.2.1.3.6.5 | Configure Coordination Point—First Phase Yellow End | H.2.7 | | | |
| | | | 5.5.7 | patternTable | |
| | | | 5.5.7.1 | patternNumber | |
| | | | 5.5.7.6 | patternCoordSyncPoint | Value = firstCoordPhsYelEnd (6) |
| 3.5.2.1.3.6.6 | Configure Coordination Point—Last Phase Yellow End | H.2.7 | | | |
| | | | 5.5.7 | patternTable | |
| | | | 5.5.7.1 | patternNumber | |
| | | | 5.5.7.6 | patternCoordSyncPoint | Value = lastCoordPhsYelEnd (6) |
| 3.5.2.1.3.6.7 | Configure Coordination Point—Unit Coordination Point | H.2.7 | | | |
| | | | 5.5.7 | patternTable | |
| | | | 5.5.7.1 | patternNumber | |
| | | | 5.5.7.6 | patternCoordSyncPoint | Value = unitCoordSyncPoint (2) |

© 2023 AASHTO / ITE / NEMA Copy Per RTM Distribution Permission

| Requirements Traceability Matrix (RTM) | | | | | |
|---|---|---|---|---|---|
| **FR ID** | **Functional Requirement** | **Dialog ID** | **Object ID** | **Object Name** | **Additional Specifications** |
| 3.5.2.1.3.7 | Configure Omit Phases During Transitions | H.2.7 | | | |
| | | | 5.2.2 | phaseTable | |
| | | | 5.2.2.1 | phaseNumber | |
| | | | 5.2.2.34 | phaseAltMinTimeTransition | |
| 3.5.2.1.3.8 | Configure Minimum Green Times During Transitions | H.2.7 | | | |
| | | | 5.2.2 | phaseTable | |
| | | | 5.2.2.1 | phaseNumber | |
| | | | 5.2.2.34 | phaseAltMinTimeTransition | |
| 3.5.2.1.3.9 | Configure Minimum Pedestrian Times During Transitions | H.2.7 | | | |
| | | | 5.2.2 | phaseTable | |
| | | | 5.2.2.1 | phaseNumber | |
| | | | 5.2.2.34 | phaseAltMinTimeTransition | |
| 3.5.2.1.3.10 | Configure Transit Maximum Mode for Coordination Requirements | | | | |
| 3.5.2.1.3.10.1 | Configure Transit Correction Mode for Coordination—Maximum 1 | G.3 | | | |
| | | | 5.5.3 | coordMaximumMode | Value = maximum1 (2) |
| 3.5.2.1.3.10.2 | Configure Transit Correction Mode for Coordination—Maximum 2 | G.3 | | | |
| | | | 5.5.3 | coordMaximumMode | Value = maximum2 (3) |
| 3.5.2.1.3.10.3 | Configure Transit Correction Mode for Coordination—MaxInhibit | G.3 | | | |
| | | | 5.5.3 | coordMaximumMode | Value = maxInhibit (4) |
| 3.5.2.1.3.10.4 | Configure Transit Correction Mode for Coordination—Maximum 3 | G.3 | | | |
| | | | 5.5.3 | coordMaximumMode | Value = maximum3 (5) |

Copy Per RTM Distribution Permission
© 2023 AASHTO / ITE / NEMA

| Requirements Traceability Matrix (RTM) | | | | | |
|---|---|---|---|---|---|
| **FR ID** | **Functional Requirement** | **Dialog ID** | **Object ID** | **Object Name** | **Additional Specifications** |
| 3.5.2.1.4 | Manage Phase-Based Timing Patterns Requirements | | | | |
| 3.5.2.1.4.1 | Configure Phase-Based Timing Patterns Requirements | | | | |
| 3.5.2.1.4.1.1 | Configure Pattern Cycle Time | H.2.7 | | | |
| | | | 5.5.6 | patternTableType | |
| | | | 5.5.7 | patternTable | |
| | | | 5.5.7.1 | patternNumber | |
| | | | 5.5.7.2 | patternCycleTime | |
| 3.5.2.1.4.1.2 | Configure Pattern Offset Time | H.2.7 | | | |
| | | | 5.5.6 | patternTableType | |
| | | | 5.5.7 | patternTable | |
| | | | 5.5.7.1 | patternNumber | |
| | | | 5.5.7.3 | patternOffsetTime | |
| 3.5.2.1.4.1.3 | Configure Pattern Split Association | H.2.7 | | | |
| | | | 5.5.6 | patternTableType | |
| | | | 5.5.7 | patternTable | |
| | | | 5.5.7.1 | patternNumber | |
| | | | 5.5.7.4 | patternSplitNumber | |
| 3.5.2.1.4.1.4 | Configure Pattern Sequence Association | H.2.7 | | | |
| | | | 5.5.6 | patternTableType | |
| | | | 5.5.7 | patternTable | |
| | | | 5.5.7.1 | patternNumber | |
| | | | 5.5.7.5 | patternSequenceNumber | |
| 3.5.2.1.4.1.5 | Configure Pattern Maximum Mode | H.2.7 | | | |
| | | | 5.5.6 | patternTableType | |
| | | | 5.5.7 | patternTable | |
| | | | 5.5.7.1 | patternNumber | |

© 2023 AASHTO / ITE / NEMA Copy Per RTM Distribution Permission

| Requirements Traceability Matrix (RTM) | | | | | |
|---|---|---|---|---|---|
| **FR ID** | **Functional Requirement** | **Dialog ID** | **Object ID** | **Object Name** | **Additional Specifications** |
| | | | 5.5.7.7 | patternOptions | |
| 3.5.2.1.4.2 | Retrieve Phase-Based Timing Patterns Requirements | | | | |
| 3.5.2.1.4.2.1 | Determine Maximum Number of Phase-Based Timing Pattern | G.1 | | | |
| | | | 5.5.5 | maxPatterns | |
| 3.5.2.1.4.2.2 | Determine Phase-Based Timing Pattern Type | G.1 | | | |
| | | | 5.5.6 | patternTableType | |
| 3.5.2.1.5 | Manage Splits Configuration Requirements | | | | |
| 3.5.2.1.5.1 | Configure Split Requirements | | | | |
| 3.5.2.1.5.1.1 | Configure Phase Split Time | H.2.7 | | | |
| | | | 5.5.9 | splitTable | |
| | | | 5.5.9.1 | splitNumber | |
| | | | 5.5.9.2 | splitPhase | |
| | | | 5.5.9.3 | splitTime | |
| 3.5.2.1.5.1.2 | Configure Phase Split Mode Requirements | | | | |
| 3.5.2.1.5.1.2.1 | Configure Phase Split Mode—None | H.2.7 | | | |
| | | | 5.5.9 | splitTable | |
| | | | 5.5.9.1 | splitNumber | |
| | | | 5.5.9.4 | splitMode | Value = 2 |
| 3.5.2.1.5.1.2.2 | Configure Phase Split Mode—Minimum Vehicle Recall | H.2.7 | | | |
| | | | 5.5.9 | splitTable | |
| | | | 5.5.9.1 | splitNumber | |
| | | | 5.5.9.4 | splitMode | Value = 3 |
| 3.5.2.1.5.1.2.3 | Configure Phase Split Mode—Maximum Vehicle Recall | H.2.7 | | | |
| | | | 5.5.9 | splitTable | |
| | | | 5.5.9.1 | splitNumber | |

Copy Per RTM Distribution Permission © 2023 AASHTO / ITE / NEMA

| Requirements Traceability Matrix (RTM) | | | | | |
|---|---|---|---|---|---|
| **FR ID** | **Functional Requirement** | **Dialog ID** | **Object ID** | **Object Name** | **Additional Specifications** |
| | | | 5.5.9.4 | splitMode | Value = 4 |
| 3.5.2.1.5.1.2.4 | Configure Phase Split Mode—Pedestrian Recall | H.2.7 | | | |
| | | | 5.5.9 | splitTable | |
| | | | 5.5.9.1 | splitNumber | |
| | | | 5.5.9.4 | splitMode | Value = 5 |
| 3.5.2.1.5.1.2.5 | Configure Phase Split Mode—Maximum Vehicle and Pedestrian Recall | H.2.7 | | | |
| | | | 5.5.9 | splitTable | |
| | | | 5.5.9.1 | splitNumber | |
| | | | 5.5.9.4 | splitMode | Value = 6 |
| 3.5.2.1.5.1.2.6 | Configure Phase Split Mode—Phase Omit | H.2.7 | | | |
| | | | 5.5.9 | splitTable | |
| | | | 5.5.9.1 | splitNumber | |
| | | | 5.5.9.4 | splitMode | Value = 7 |
| 3.5.2.1.5.1.2.7 | Configure Phase Split Mode—Bicycle Recall | H.2.7 | | | |
| | | | 5.5.9 | splitTable | |
| | | | 5.5.9.1 | splitNumber | |
| | | | 5.5.9.4 | splitMode | Value = 4 |
| 3.5.2.1.5.1.2.8 | Configure Phase Split Mode—Transit Recall | H.2.7 | | | |
| | | | 5.5.9 | splitTable | |
| | | | 5.5.9.1 | splitNumber | |
| | | | 5.5.9.4 | splitMode | Value = 4 |
| 3.5.2.1.5.1.2.9 | Configure Phase Split Mode—Non-Actuated | H.2.7 | | | |
| | | | 5.5.9 | splitTable | |
| | | | 5.5.9.1 | splitNumber | |
| | | | 5.5.9.4 | splitMode | Value = 8 |
| 3.5.2.1.5.1.3 | Configure Split Coordination Phase | H.2.7 | | | |

© 2023 AASHTO / ITE / NEMA Copy Per RTM Distribution Permission

| Requirements Traceability Matrix (RTM) | | | | | |
|---|---|---|---|---|---|
| **FR ID** | **Functional Requirement** | **Dialog ID** | **Object ID** | **Object Name** | **Additional Specifications** |
| | | | 5.5.9 | splitTable | |
| | | | 5.5.9.1 | splitNumber | |
| | | | 5.5.9.5 | splitCoordPhase | |
| 3.5.2.1.5.1.4 | Configure Pre-Timed Split | H.2.7 | | | |
| | | | 5.5.9 | splitTable | |
| | | | 5.5.9.1 | splitNumber | |
| | | | 5.5.9.3 | splitTime | |
| 3.5.2.1.5.2 | Retrieve Split Requirements | | | | |
| 3.5.2.1.5.2.1 | Determine Maximum Number of Phase Splits | G.1 | | | |
| | | | 5.5.8 | maxSplits | |
| 3.5.2.1.6 | Manage Ring Configuration Requirements | | | | |
| 3.5.2.1.6.1 | Configure Ring Requirements | | | | |
| 3.5.2.1.6.1.1 | Configure Sequence Data | 4.2.2 | | | |
| | | | 5.8.3 | sequenceTable | |
| | | | 5.8.3.1 | sequenceNumber | |
| | | | 5.8.3.2 | sequenceRingNumber | |
| | | | 5.8.3.3 | sequenceData | |
| 3.5.2.1.6.2 | Retrieve Rings Requirements | | | | |
| 3.5.2.1.6.2.1 | Determine Maximum Number of Rings | G.1 | | | |
| | | | 5.8.1 | maxRings | |
| 3.5.2.1.6.2.2 | Determine Maximum Number of Sequences | G.1 | | | |
| | | | 5.8.2 | maxSequences | |
| 3.5.2.1.7 | Manage Channel Configuration Requirements | | | | |
| 3.5.2.1.7.1 | Configure Channel Requirements | | | | |
| 3.5.2.1.7.1.1 | Configure Channel Control Source | H.2.7 | | | |
| | | | 5.9.2 | channelTable | |
| | | | 5.9.2.1 | channelNumber | |


© 2023 AASHTO / ITE / NEMA

| Requirements Traceability Matrix (RTM) | | | | | |
|---|---|---|---|---|---|
| **FR ID** | **Functional Requirement** | **Dialog ID** | **Object ID** | **Object Name** | **Additional Specifications** |
| | | | 5.9.2.2 | channelControlSource | |
| 3.5.2.1.7.1.2 | Configure Channel Control Type Requirements | | | | |
| 3.5.2.1.7.1.2.1 | Configure Channel Control Type—Vehicle Phase | H.2.7 | | | |
| | | | 5.9.2 | channelTable | |
| | | | 5.9.2.1 | channelNumber | |
| | | | 5.9.2.3 | channelControlType | Value = 2 |
| 3.5.2.1.7.1.2.2 | Configure Channel Control Type—Vehicle Overlap Phase | H.2.7 | | | |
| | | | 5.9.2 | channelTable | |
| | | | 5.9.2.1 | channelNumber | |
| | | | 5.9.2.3 | channelControlType | Value = 4 |
| 3.5.2.1.7.1.2.3 | Configure Channel Control Type—Pedestrian Phase | H.2.7 | | | |
| | | | 5.9.2 | channelTable | |
| | | | 5.9.2.1 | channelNumber | |
| | | | 5.9.2.3 | channelControlType | Value = 3 |
| 3.5.2.1.7.1.2.4 | Configure Channel Control Type—Pedestrian Overlap Phase | H.2.7 | | | |
| | | | 5.9.2 | channelTable | |
| | | | 5.9.2.1 | channelNumber | |
| | | | 5.9.2.3 | channelControlType | Value = 5 |
| 3.5.2.1.7.1.2.5 | Configure Channel Control Type—Bicycle Phase | H.2.7 | | | |
| | | | 5.9.2 | channelTable | |
| | | | 5.9.2.1 | channelNumber | |
| | | | 5.9.2.3 | channelControlType | Value = 2 |

© 2023 AASHTO / ITE / NEMA Copy Per RTM Distribution Permission

| Requirements Traceability Matrix (RTM) | | | | | |
|---|---|---|---|---|---|
| **FR ID** | **Functional Requirement** | **Dialog ID** | **Object ID** | **Object Name** | **Additional Specifications** |
| 3.5.2.1.7.1.2.6 | Configure Channel Control Type—Bicycle Overlap Phase | H.2.7 | | | |
| | | | 5.9.2 | channelTable | |
| | | | 5.9.2.1 | channelNumber | |
| | | | 5.9.2.3 | channelControlType | Value = 4 |
| 3.5.2.1.7.1.2.7 | Configure Channel Control Type—Transit Phase | H.2.7 | | | |
| | | | 5.9.2 | channelTable | |
| | | | 5.9.2.1 | channelNumber | |
| | | | 5.9.2.3 | channelControlType | Value = 2 |
| 3.5.2.1.7.1.2.8 | Configure Channel Control Type—Transit Overlap Phase | H.2.7 | | | |
| | | | 5.9.2 | channelTable | |
| | | | 5.9.2.1 | channelNumber | |
| | | | 5.9.2.3 | channelControlType | Value = 4 |
| 3.5.2.1.7.1.2.9 | Configure Channel Control Type—Queue Jump Phase | H.2.7 | | | |
| | | | 5.9.2 | channelTable | |
| | | | 5.9.2.1 | channelNumber | |
| | | | 5.9.2.3 | channelControlType | Value = 6 |
| 3.5.2.1.7.1.3 | Configure Channel Flash Enable/Disable Requirements | | | | |
| 3.5.2.1.7.1.3.1 | Enable/Disable Channel Flash—Yellow | H.2.7 | | | |
| | | | 5.9.2 | channelTable | |
| | | | 5.9.2.1 | channelNumber | |
| | | | 5.9.2.4 | channelFlash | Bit 1 |
| 3.5.2.1.7.1.3.2 | Enable/Disable Channel Flash—Red | H.2.7 | | | |
| | | | 5.9.2 | channelTable | |
| | | | 5.9.2.1 | channelNumber | |

Copy Per RTM Distribution Permission © 2023 AASHTO / ITE / NEMA

| Requirements Traceability Matrix (RTM) | | | | | |
|---|---|---|---|---|---|
| **FR ID** | **Functional Requirement** | **Dialog ID** | **Object ID** | **Object Name** | **Additional Specifications** |
| | | | 5.9.2.4 | channelFlash | Bit 2 |
| 3.5.2.1.7.1.3.3 | Enable/Disable Channel Flash—Alternate Half Hertz | H.2.7 | | | |
| | | | 5.9.2 | channelTable | |
| | | | 5.9.2.1 | channelNumber | |
| | | | 5.9.2.4 | channelFlash | Bit 3 |
| 3.5.2.1.7.1.4 | Configure Channel Dim Enable/Disable Requirements | | | | |
| 3.5.2.1.7.1.4.1 | Enable/Disable Channel Dim—Green | H.2.7 | | | |
| | | | 5.9.2 | channelTable | |
| | | | 5.9.2.1 | channelNumber | |
| | | | 5.9.2.5 | channelDim | Bit 0 |
| 3.5.2.1.7.1.4.2 | Enable/Disable Channel Dim—Yellow | H.2.7 | | | |
| | | | 5.9.2 | channelTable | |
| | | | 5.9.2.1 | channelNumber | |
| | | | 5.9.2.5 | channelDim | Bit 1 |
| 3.5.2.1.7.1.4.3 | Enable/Disable Channel Dim—Red | H.2.7 | | | |
| | | | 5.9.2 | channelTable | |
| | | | 5.9.2.1 | channelNumber | |
| | | | 5.9.2.5 | channelDim | Bit 2 |
| 3.5.2.1.7.1.4.4 | Enable/Disable Channel Dim—Alternate Half Hertz | H.2.7 | | | |
| | | | 5.9.2 | channelTable | |
| | | | 5.9.2.1 | channelNumber | |
| | | | 5.9.2.5 | channelDim | Bit 3 |
| 3.5.2.1.7.2 | Retrieve Channel Requirements | | | | |
| 3.5.2.1.7.2.1 | Determine Maximum Number of Channels | G.1 | | | |
| | | | 5.9.1 | maxChannels | |

© 2023 AASHTO / ITE / NEMA Copy Per RTM Distribution Permission

| Requirements Traceability Matrix (RTM) | | | | | |
|---|---|---|---|---|---|
| **FR ID** | **Functional Requirement** | **Dialog ID** | **Object ID** | **Object Name** | **Additional Specifications** |
| 3.5.2.1.8 | Manage Overlap Configuration Requirements | | | | |
| 3.5.2.1.8.1 | Configure Overlap Requirements | | | | |
| 3.5.2.1.8.1.1 | Configure Overlap Type Requirements | | | | |
| 3.5.2.1.8.1.1.1 | Configure Overlap Type—Vehicle Normal | H.2.7 | | | |
| | | | 5.10.2 | overlapTable | |
| | | | 5.10.2.1 | overlapNumber | |
| | | | 5.10.2.2 | overlapType | Value = 2 |
| 3.5.2.1.8.1.1.2 | Configure Overlap Type—Vehicle Minus Green and Yellow | H.2.7 | | | |
| | | | 5.10.2 | overlapTable | |
| | | | 5.10.2.1 | overlapNumber | |
| | | | 5.10.2.2 | overlapType | Value = 3 |
| 3.5.2.1.8.1.1.3 | Configure Overlap Type—Pedestrian Normal | H.2.7 | | | |
| | | | 5.10.2 | overlapTable | |
| | | | 5.10.2.1 | overlapNumber | |
| | | | 5.10.2.2 | overlapType | Value = 4 |
| 3.5.2.1.8.1.1.4 | Configure Overlap Type—Bicycle Normal | H.2.7 | | | |
| | | | 5.10.2 | overlapTable | |
| | | | 5.10.2.1 | overlapNumber | |
| | | | 5.10.2.2 | overlapType | Value = 2 |
| 3.5.2.1.8.1.1.5 | Configure Overlap Type—Transit Normal | H.2.7 | | | |
| | | | 5.10.2 | overlapTable | |
| | | | 5.10.2.1 | overlapNumber | |
| | | | 5.10.2.2 | overlapType | Value = 2 |
| 3.5.2.1.8.1.1.6 | Configure Overlap Type—Flashing Yellow Arrow—3 Section Head | H.2.7 | | | |
| | | | 5.10.2 | overlapTable | |
| | | | 5.10.2.1 | overlapNumber | |

Copy Per RTM Distribution Permission © 2023 AASHTO / ITE / NEMA

| Requirements Traceability Matrix (RTM) | | | | | |
|---|---|---|---|---|---|
| **FR ID** | **Functional Requirement** | **Dialog ID** | **Object ID** | **Object Name** | **Additional Specifications** |
| | | | 5.10.2.2 | overlapType | Value = 5 |
| 3.5.2.1.8.1.1.7 | Configure Overlap Type—Flashing Yellow Arrow—4 Section Head | H.2.7 | | | |
| | | | 5.10.2 | overlapTable | |
| | | | 5.10.2.1 | overlapNumber | |
| | | | 5.10.2.2 | overlapType | Value = 6 |
| 3.5.2.1.8.1.1.8 | Configure Overlap Type—Flashing Yellow Arrow for Pedestrians | 4.2.2 | | | |
| | | | 5.10.2 | overlapTable | |
| | | | 5.10.2.1 | overlapNumber | |
| | | | 5.10.2.10 | overlapConflictingPedPhases | |
| 3.5.2.1.8.1.1.9 | Configure Overlap Type—Flashing Red Arrow—3 Section Head | H.2.7 | | | |
| | | | 5.10.2 | overlapTable | |
| | | | 5.10.2.1 | overlapNumber | |
| | | | 5.10.2.2 | overlapType | Value = 7 |
| 3.5.2.1.8.1.1.10 | Configure Overlap Type—Flashing Red Arrow—4 Section Head | H.2.7 | | | |
| | | | 5.10.2 | overlapTable | |
| | | | 5.10.2.1 | overlapNumber | |
| | | | 5.10.2.2 | overlapType | Value = 8 |
| 3.5.2.1.8.1.1.11 | Configure Overlap Type—Transit Specific Signal Head | H.2.7 | | | |
| | | | 5.10.2 | overlapTable | |
| | | | 5.10.2.1 | overlapNumber | |
| | | | 5.10.2.2 | overlapType | Value = 2 |
| 3.5.2.1.8.1.1.12 | Configure Overlap Type—2 Section Transit Specific Signal Head | H.2.7 | | | |
| | | | 5.10.2 | overlapTable | |

© 2023 AASHTO / ITE / NEMA
Copy Per RTM Distribution Permission

| Requirements Traceability Matrix (RTM) | | | | | |
|---|---|---|---|---|---|
| **FR ID** | **Functional Requirement** | **Dialog ID** | **Object ID** | **Object Name** | **Additional Specifications** |
| | | | 5.10.2.1 | overlapNumber | |
| | | | 5.10.2.2 | overlapType | Value = 9 |
| 3.5.2.1.8.1.1.13 | Configure Overlap Type—Minus Green Yellow Alternate | H.2.7 | | | |
| | | | 5.10.2 | overlapTable | |
| | | | 5.10.2.1 | overlapNumber | |
| | | | 5.10.2.2 | overlapType | Value = 10 |
| 3.5.2.1.8.1.2 | Configure Overlap Included Phases | 4.2.2 | | | |
| | | | 5.10.2 | overlapTable | |
| | | | 5.10.2.1 | overlapNumber | |
| | | | 5.10.2.3 | overlapIncludedPhases | |
| 3.5.2.1.8.1.3 | Configure Overlap Modifier Phases | 4.2.2 | | | |
| | | | 5.10.2 | overlapTable | |
| | | | 5.10.2.1 | overlapNumber | |
| | | | 5.10.2.4 | overlapModifierPhases | |
| 3.5.2.1.8.1.4 | Configure Pedestrian Modifier Phases | 4.2.2 | | | |
| | | | 5.10.2 | overlapTable | |
| | | | 5.10.2.1 | overlapNumber | |
| | | | 5.10.2.10 | overlapConflictingPedPhases | |
| 3.5.2.1.8.1.5 | Configure Overlap Trailing Green | H.2.7 | | | |
| | | | 5.10.2 | overlapTable | |
| | | | 5.10.2.1 | overlapNumber | |
| | | | 5.10.2.5 | overlapTrailGreen | |
| 3.5.2.1.8.1.6 | Configure Overlap Trailing Yellow | H.2.7 | | | |
| | | | 5.10.2 | overlapTable | |
| | | | 5.10.2.1 | overlapNumber | |
| | | | 5.10.2.6 | overlapTrailYellow | |
| 3.5.2.1.8.1.7 | Configure Overlap Trailing Red Clearance | H.2.7 | | | |

Copy Per RTM Distribution Permission © 2023 AASHTO / ITE / NEMA

| Requirements Traceability Matrix (RTM) | | | | | |
|---|---|---|---|---|---|
| **FR ID** | **Functional Requirement** | **Dialog ID** | **Object ID** | **Object Name** | **Additional Specifications** |
| | | | 5.10.2 | overlapTable | |
| | | | 5.10.2.1 | overlapNumber | |
| | | | 5.10.2.7 | overlapTrailRed | |
| 3.5.2.1.8.1.8 | Configure Overlap Walk | H.2.7 | | | |
| | | | 5.10.2 | overlapTable | |
| | | | 5.10.2.1 | overlapNumber | |
| | | | 5.10.2.8 | overlapWalk | |
| 3.5.2.1.8.1.9 | Configure Overlap Pedestrian Clearance | H.2.7 | | | |
| | | | 5.10.2 | overlapTable | |
| | | | 5.10.2.1 | overlapNumber | |
| | | | 5.10.2.9 | overlapPedClearance | |
| 3.5.2.1.8.2 | Retrieve Overlaps Requirements | | | | |
| 3.5.2.1.8.2.1 | Determine Maximum Number of Overlaps | G.1 | | | |
| | | | 5.10.1 | maxOverlaps | |
| 3.5.2.1.9 | Manage Preempt Configuration Requirements | | | | |
| 3.5.2.1.9.1 | Configure Preempts for Phase-Based ASC Requirements | | | | |
| 3.5.2.1.9.1.1 | Enable/Disable Preempt Inputs | H.2.7 | | | |
| | | | 5.7.2 | preemptTable | |
| | | | 5.7.2.1 | preemptNumber | |
| | | | 5.7.2.2 | preemptControl | Bit 4 |
| 3.5.2.1.9.1.2 | Configure Preempt Control Requirements | | | | |
| 3.5.2.1.9.1.2.1 | Configure Preempt Control—Non-Locking Memory | H.2.7 | | | |
| | | | 5.7.2 | preemptTable | |
| | | | 5.7.2.1 | preemptNumber | |
| | | | 5.7.2.2 | preemptControl | Bit 0 |

© 2023 AASHTO / ITE / NEMA Copy Per RTM Distribution Permission

| Requirements Traceability Matrix (RTM) | | | | | |
|---|---|---|---|---|---|
| **FR ID** | **Functional Requirement** | **Dialog ID** | **Object ID** | **Object Name** | **Additional Specifications** |
| 3.5.2.1.9.1.2.2 | Configure Preempt Control—Preempt Override Flash | H.2.7 | | | |
| | | | 5.7.2 | preemptTable | |
| | | | 5.7.2.1 | preemptNumber | |
| | | | 5.7.2.2 | preemptControl | Bit 1 |
| 3.5.2.1.9.1.2.3 | Configure Preempt Control—Preempt Override Priority | H.2.7 | | | |
| | | | 5.7.2 | preemptTable | |
| | | | 5.7.2.1 | preemptNumber | |
| | | | 5.7.2.2 | preemptControl | Bit 2 |
| 3.5.2.1.9.1.2.4 | Configure Preempt Control—Flash Dwell | H.2.7 | | | |
| | | | 5.7.2 | preemptTable | |
| | | | 5.7.2.1 | preemptNumber | |
| | | | 5.7.2.2 | preemptControl | Bit 3 |
| 3.5.2.1.9.1.3 | Configure Preempt Link | H.2.7 | | | |
| | | | 5.7.2 | preemptTable | |
| | | | 5.7.2.1 | preemptNumber | |
| | | | 5.7.2.3 | preemptLink | |
| 3.5.2.1.9.1.4 | Configure Preempt Delay | H.2.7 | | | |
| | | | 5.7.2 | preemptTable | |
| | | | 5.7.2.1 | preemptNumber | |
| | | | 5.7.2.4 | preemptDelay | |
| 3.5.2.1.9.1.5 | Configure Preempt Minimum Duration | H.2.7 | | | |
| | | | 5.7.2 | preemptTable | |
| | | | 5.7.2.1 | preemptNumber | |
| | | | 5.7.2.5 | preemptMinimumDuration | |
| 3.5.2.1.9.1.6 | Configure Preempt Enter Minimum Green Time | H.2.7 | | | |

Copy Per RTM Distribution Permission
© 2023 AASHTO / ITE / NEMA

| Requirements Traceability Matrix (RTM) | | | | | |
|---|---|---|---|---|---|
| **FR ID** | **Functional Requirement** | **Dialog ID** | **Object ID** | **Object Name** | **Additional Specifications** |
| | | | 5.7.2 | preemptTable | |
| | | | 5.7.2.1 | preemptNumber | |
| | | | 5.7.2.6 | preemptMinimumGreen | |
| 3.5.2.1.9.1.7 | Configure Preempt Enter Minimum Walk Time | H.2.7 | | | |
| | | | 5.7.2 | preemptTable | |
| | | | 5.7.2.1 | preemptNumber | |
| | | | 5.7.2.7 | preemptMinimumWalk | |
| 3.5.2.1.9.1.8 | Configure Preempt Enter Pedestrian Clearance Time | H.2.7 | | | |
| | | | 5.7.2 | preemptTable | |
| | | | 5.7.2.1 | preemptNumber | |
| | | | 5.7.2.8 | preemptEnterPedClear | |
| 3.5.2.1.9.1.9 | Configure Preempt Track Clearance Time | H.2.7 | | | |
| | | | 5.7.2 | preemptTable | |
| | | | 5.7.2.1 | preemptNumber | |
| | | | 5.7.2.9 | preemptTrackGreen | |
| 3.5.2.1.9.1.10 | Configure Preempt Minimum Dwell Time | H.2.7 | | | |
| | | | 5.7.2 | preemptTable | |
| | | | 5.7.2.1 | preemptNumber | |
| | | | 5.7.2.10 | preemptDwellGreen | |
| 3.5.2.1.9.1.11 | Configure Preempt Maximum Presence Time | H.2.7 | | | |
| | | | 5.7.2 | preemptTable | |
| | | | 5.7.2.1 | preemptNumber | |
| | | | 5.7.2.11 | preemptMaximumPresence | |
| 3.5.2.1.9.1.12 | Configure Preempt Track Clearance Phases | 4.2.2 | | | |
| | | | 5.7.2 | preemptTable | |
| | | | 5.7.2.1 | preemptNumber | |

© 2023 AASHTO / ITE / NEMA Copy Per RTM Distribution Permission

| Requirements Traceability Matrix (RTM) | | | | | |
|---|---|---|---|---|---|
| **FR ID** | **Functional Requirement** | **Dialog ID** | **Object ID** | **Object Name** | **Additional Specifications** |
| | | | 5.7.2.12 | preemptTrackPhase | |
| 3.5.2.1.9.1.13 | Configure Preempt Dwell Phases | 4.2.2 | | | |
| | | | 5.7.2 | preemptTable | |
| | | | 5.7.2.1 | preemptNumber | |
| | | | 5.7.2.13 | preemptDwellPhase | |
| 3.5.2.1.9.1.14 | Configure Preempt Dwell Pedestrian Movements | 4.2.2 | | | |
| | | | 5.7.2 | preemptTable | |
| | | | 5.7.2.1 | preemptNumber | |
| | | | 5.7.2.14 | preemptDwellPed | |
| 3.5.2.1.9.1.15 | Configure Preempt Exit Phases | 4.2.2 | | | |
| | | | 5.7.2 | preemptTable | |
| | | | 5.7.2.1 | preemptNumber | |
| | | | 5.7.2.15 | preemptExitPhase | |
| 3.5.2.1.9.1.16 | Configure Preempt Exit Phase Strategy Requirements | | | | |
| 3.5.2.1.9.1.16.1 | Configure Preempt Exit Phase Strategy—Exit to Normal Operation | H.2.7 | | | |
| | | | 5.7.2 | preemptTable | |
| | | | 5.7.2.1 | preemptNumber | |
| | | | 5.7.2.27 | preemptExitType | exitPhases (1) |
| 3.5.2.1.9.1.16.2 | Configure Preempt Exit Phase Strategy—Exit to Coordination | H.2.7 | | | |
| | | | 5.7.2 | preemptTable | |
| | | | 5.7.2.1 | preemptNumber | |
| | | | 5.7.2.27 | preemptExitType | exitCoord (4) |
| 3.5.2.1.9.1.16.3 | Configure Preempt Exit Phase Strategy—Exit to Queue Delay Recovery | H.2.7 | | | |
| | | | 5.7.2 | preemptTable | |

Copy Per RTM Distribution Permission © 2023 AASHTO / ITE / NEMA

| Requirements Traceability Matrix (RTM) | | | | | |
|---|---|---|---|---|---|
| **FR ID** | **Functional Requirement** | **Dialog ID** | **Object ID** | **Object Name** | **Additional Specifications** |
| | | | 5.7.2.1 | preemptNumber | |
| | | | 5.7.2.27 | preemptExitType | queueDelayRecovery (2) |
| 3.5.2.1.9.1.16.4 | Configure Preempt Exit Phase Strategy—Exit to Short Service Phase | H.2.7 | | | |
| | | | 5.7.2 | preemptTable | |
| | | | 5.7.2.1 | preemptNumber | |
| | | | 5.7.2.27 | preemptExitType | shortService (3) |
| 3.5.2.1.9.1.17 | Configure Preempt Track Overlap | H.2.7 | | | |
| | | | 5.7.2 | preemptTable | |
| | | | 5.7.2.1 | preemptNumber | |
| | | | 5.7.2.17 | preemptTrackOverlap | |
| 3.5.2.1.9.1.18 | Configure Preempt Dwell Overlap | 4.2.2 | | | |
| | | | 5.7.2 | preemptTable | |
| | | | 5.7.2.1 | preemptNumber | |
| | | | 5.7.2.18 | preemptDwellOverlap | |
| 3.5.2.1.9.1.19 | Configure Preempt Cycling Phases | 4.2.2 | | | |
| | | | 5.7.2 | preemptTable | |
| | | | 5.7.2.1 | preemptNumber | |
| | | | 5.7.2.19 | preemptCyclingPhase | |
| 3.5.2.1.9.1.20 | Configure Preempt Cycling Pedestrian Movements | 4.2.2 | | | |
| | | | 5.7.2 | preemptTable | |
| | | | 5.7.2.1 | preemptNumber | |
| | | | 5.7.2.20 | preemptCyclingPed | |
| 3.5.2.1.9.1.21 | Configure Preempt Cycling Overlaps | 4.2.2 | | | |
| | | | 5.7.2 | preemptTable | |
| | | | 5.7.2.1 | preemptNumber | |
| | | | 5.7.2.21 | preemptCyclingOverlap | |

© 2023 AASHTO / ITE / NEMA Copy Per RTM Distribution Permission

| Requirements Traceability Matrix (RTM) | | | | | |
|---|---|---|---|---|---|
| **FR ID** | **Functional Requirement** | **Dialog ID** | **Object ID** | **Object Name** | **Additional Specifications** |
| 3.5.2.1.9.1.22 | Configure Preempt Enter Yellow Change Time | H.2.7 | | | |
| | | | 5.7.2 | preemptTable | |
| | | | 5.7.2.1 | preemptNumber | |
| | | | 5.7.2.22 | preemptEnterYellowChange | |
| 3.5.2.1.9.1.23 | Configure Preempt Enter Red Clearance Time | H.2.7 | | | |
| | | | 5.7.2 | preemptTable | |
| | | | 5.7.2.1 | preemptNumber | |
| | | | 5.7.2.23 | preemptEnterRedClear | |
| 3.5.2.1.9.1.24 | Configure Preempt Track Yellow Change Time | H.2.7 | | | |
| | | | 5.7.2 | preemptTable | |
| | | | 5.7.2.1 | preemptNumber | |
| | | | 5.7.2.24 | preemptTrackYellowChange | |
| 3.5.2.1.9.1.25 | Configure Preempt Track Red Clearance Time | H.2.7 | | | |
| | | | 5.7.2 | preemptTable | |
| | | | 5.7.2.1 | preemptNumber | |
| | | | 5.7.2.25 | preemptTrackRedClear | |
| 3.5.2.1.9.1.26 | Configure Preempt Exit Priority Levels | H.2.7 | | | |
| | | | 5.3.2.1 | vehicleDetectorNumber | |
| | | | 5.7.7 | preemptQueueDelayTable | |
| | | | 5.7.7.1 | preemptDetectorWeight | |
| 3.5.2.1.9.1.27 | Configure Preempt Max Presence Exceeded Requirements | | | | |
| 3.5.2.1.9.1.27.1 | Configure Preempt Max Presence Exceeded—Normal | H.2.7 | | | |
| | | | 5.7.2 | preemptTable | |

Copy Per RTM Distribution Permission © 2023 AASHTO / ITE / NEMA

| Requirements Traceability Matrix (RTM) | | | | | |
|---|---|---|---|---|---|
| **FR ID** | **Functional Requirement** | **Dialog ID** | **Object ID** | **Object Name** | **Additional Specifications** |
| | | | 5.7.2.1 | preemptNumber | |
| | | | 5.7.2.11 | preemptMaximumPresence | |
| 3.5.2.1.9.1.27.2 | Configure Preempt Max Presence Exceeded—All Flash Red | H.2.7 | | | |
| | | | 5.7.2 | preemptTable | |
| | | | 5.7.2.1 | preemptNumber | |
| | | | 5.7.2.2 | preemptControl | Bit 5 |
| 3.5.2.1.9.1.28 | Configure Preempt Cycling Phases Sequence | 4.2.2 | | | |
| | | | 5.7.2 | preemptTable | |
| | | | 5.7.2.1 | preemptNumber | |
| | | | 5.7.2.13 | preemptDwellPhase | |
| 3.5.2.1.9.1.29 | Configure Preempt Enter Minimum Bicycle Time | H.2.7 | | | |
| | | | 5.7.2 | preemptTable | |
| | | | 5.7.2.1 | preemptNumber | |
| | | | 5.7.2.6 | preemptMinimumGreen | |
| 3.5.2.1.9.1.30 | Configure Preempt Enter Bicycle Clearance Time | H.2.7 | | | |
| | | | 5.7.2 | preemptTable | |
| | | | 5.7.2.1 | preemptNumber | |
| | | | 5.7.2.22 | preemptEnterYellowChange | |
| 3.5.2.1.9.1.31 | Configure Preempt Cycling Bicycle Phases | H.2.7 | | | |
| | | | 5.7.2 | preemptTable | |
| | | | 5.7.2.1 | preemptNumber | |
| | | | 5.7.2.26 | preemptSequenceNumber | |
| 3.5.2.1.9.1.32 | Configure Preempt Enter Minimum Transit Time | H.2.7 | | | |
| | | | 5.7.2 | preemptTable | |

© 2023 AASHTO / ITE / NEMA Copy Per RTM Distribution Permission

| Requirements Traceability Matrix (RTM) | | | | | |
|---|---|---|---|---|---|
| **FR ID** | **Functional Requirement** | **Dialog ID** | **Object ID** | **Object Name** | **Additional Specifications** |
| | | | 5.7.2.1 | preemptNumber | |
| | | | 5.7.2.6 | preemptMinimumGreen | |
| 3.5.2.1.9.1.33 | Configure Preempt Enter Transit Clearance Time | H.2.7 | | | |
| | | | 5.7.2 | preemptTable | |
| | | | 5.7.2.1 | preemptNumber | |
| | | | 5.7.2.22 | preemptEnterYellowChange | |
| 3.5.2.1.9.1.34 | Configure Preempt Cycling Transit Phases | 4.2.2 | | | |
| | | | 5.7.2 | preemptTable | |
| | | | 5.7.2.1 | preemptNumber | |
| | | | 5.7.2.13 | preemptDwellPhase | |
| 3.5.2.1.9.1.35 | Configure Preempt Gate Description | H.2.7 | | | |
| | | | 5.7.8 | maxPreemptGates | |
| | | | 5.7.9 | preemptGateTable | |
| | | | 5.7.9.1 | preemptGateNumber | |
| | | | 5.7.9.3 | preemptGateDescription | |
| 3.5.2.1.9.2 | Retrieve Preempt Configuration for Phase-Based ASC Requirements | | | | |
| 3.5.2.1.9.2.1 | Determine Maximum Number of Preempts | G.1 | | | |
| | | | 5.7.1 | maxPreempts | |
| 3.5.2.1.10 | Manage Timing Pattern Scheduler Requirements | | | | |
| 3.5.2.1.10.1 | Configure Timing Pattern Scheduler Requirements | | | | |
| 3.5.2.1.10.1.1 | Configure Timebase Pattern Synchronization Time | G.3 | | | |
| | | | 5.6.1 | timebaseAscPatternSync | |
| 3.5.2.1.10.1.2 | Configure Timebased Action—Pattern | H.2.7 | | | |
| | | | 5.6.3 | timebaseAscActionTable | |

Copy Per RTM Distribution Permission © 2023 AASHTO / ITE / NEMA

| Requirements Traceability Matrix (RTM) | | | | | |
|---|---|---|---|---|---|
| **FR ID** | **Functional Requirement** | **Dialog ID** | **Object ID** | **Object Name** | **Additional Specifications** |
| | | | 5.6.3.1 | timebaseAscActionNumber | |
| | | | 5.6.3.2 | timebaseAscPattern | |
| 3.5.2.1.10.1.3 | Configure Timebased Action—Auxiliary Functions Requirements | | | | |
| 3.5.2.1.10.1.3.1 | Configure Timebased Action—Auxiliary Function 1 | H.2.7 | | | |
| | | | 5.6.3 | timebaseAscActionTable | |
| | | | 5.6.3.1 | timebaseAscActionNumber | |
| | | | 5.6.3.3 | timebaseAscAuxiliaryFunction | |
| 3.5.2.1.10.1.3.2 | Configure Timebased Action—Auxiliary Function 2 | H.2.7 | | | |
| | | | 5.6.3 | timebaseAscActionTable | |
| | | | 5.6.3.1 | timebaseAscActionNumber | |
| | | | 5.6.3.3 | timebaseAscAuxiliaryFunction | |
| 3.5.2.1.10.1.3.3 | Configure Timebased Action—Auxiliary Function 3 | H.2.7 | | | |
| | | | 5.6.3 | timebaseAscActionTable | |
| | | | 5.6.3.1 | timebaseAscActionNumber | |
| | | | 5.6.3.3 | timebaseAscAuxiliaryFunction | |
| 3.5.2.1.10.1.3.4 | Configure Timebased Action—Dimming | H.2.7 | | | |
| | | | 5.6.3 | timebaseAscActionTable | |
| | | | 5.6.3.1 | timebaseAscActionNumber | |
| | | | 5.6.3.3 | timebaseAscAuxiliaryFunction | |
| 3.5.2.1.10.1.4 | Configure Timebased Action—Special Functions Requirements | | | | |
| 3.5.2.1.10.1.4.1 | Configure Timebased Action—Special Function 1 | H.2.7 | | | |
| | | | 5.6.3 | timebaseAscActionTable | |

© 2023 AASHTO / ITE / NEMA Copy Per RTM Distribution Permission

| Requirements Traceability Matrix (RTM) | | | | | |
|---|---|---|---|---|---|
| **FR ID** | **Functional Requirement** | **Dialog ID** | **Object ID** | **Object Name** | **Additional Specifications** |
| | | | 5.6.3.1 | timebaseAscActionNumber | |
| | | | 5.6.3.4 | timebaseAscSpecialFunction | |
| 3.5.2.1.10.1.4.2 | Configure Timebased Action—Special Function 2 | H.2.7 | | | |
| | | | 5.6.3 | timebaseAscActionTable | |
| | | | 5.6.3.1 | timebaseAscActionNumber | |
| | | | 5.6.3.4 | timebaseAscSpecialFunction | |
| 3.5.2.1.10.1.4.3 | Configure Timebased Action—Special Function 3 | H.2.7 | | | |
| | | | 5.6.3 | timebaseAscActionTable | |
| | | | 5.6.3.1 | timebaseAscActionNumber | |
| | | | 5.6.3.4 | timebaseAscSpecialFunction | |
| 3.5.2.1.10.1.4.4 | Configure Timebased Action—Special Function 4 | H.2.7 | | | |
| | | | 5.6.3 | timebaseAscActionTable | |
| | | | 5.6.3.1 | timebaseAscActionNumber | |
| | | | 5.6.3.4 | timebaseAscSpecialFunction | |
| 3.5.2.1.10.1.4.5 | Configure Timebased Action—Special Function 5 | H.2.7 | | | |
| | | | 5.6.3 | timebaseAscActionTable | |
| | | | 5.6.3.1 | timebaseAscActionNumber | |
| | | | 5.6.3.4 | timebaseAscSpecialFunction | |
| 3.5.2.1.10.1.4.6 | Configure Timebased Action—Special Function 6 | H.2.7 | | | |
| | | | 5.6.3 | timebaseAscActionTable | |
| | | | 5.6.3.1 | timebaseAscActionNumber | |
| | | | 5.6.3.4 | timebaseAscSpecialFunction | |
| 3.5.2.1.10.1.4.7 | Configure Timebased Action—Special Function 7 | H.2.7 | | | |

Copy Per RTM Distribution Permission
© 2023 AASHTO / ITE / NEMA

| Requirements Traceability Matrix (RTM) | | | | | |
|---|---|---|---|---|---|
| **FR ID** | **Functional Requirement** | **Dialog ID** | **Object ID** | **Object Name** | **Additional Specifications** |
| | | | 5.6.3 | timebaseAscActionTable | |
| | | | 5.6.3.1 | timebaseAscActionNumber | |
| | | | 5.6.3.4 | timebaseAscSpecialFunction | |
| 3.5.2.1.10.1.4.8 | Configure Timebased Action—Special Function 8 | H.2.7 | | | |
| | | | 5.6.3 | timebaseAscActionTable | |
| | | | 5.6.3.1 | timebaseAscActionNumber | |
| | | | 5.6.3.4 | timebaseAscSpecialFunction | |
| 3.5.2.1.10.2 | Retrieve Timing Pattern Scheduler Requirements | | | | |
| 3.5.2.1.10.2.1 | Determine Maximum Number of Timebased Actions | G.1 | | | |
| | | | 5.6.2 | maxTimebaseAscActions | |
| 3.5.2.1.10.2.2 | Determine Action in Effect | G.1 | | | |
| | | | 5.6.4 | timebaseAscActionStatus | |
| 3.5.2.1.11 | Manage I/O Mapping Requirements | | | | |
| 3.5.2.1.11.1 | Configure I/O Mapping Requirements | | | | |
| 3.5.2.1.11.1.1 | Set Active I/O Map | 4.2.5 | | | |
| | | | 5.14.1.2 | ascIOactiveMap | |
| | | | 5.14.1.3 | ascIOactivateRequirement | |
| 3.5.2.1.11.1.2 | Configure I/O Map Requirements | | | | |
| 3.5.2.1.11.1.2.1 | Configure I/O Map Description | 4.2.4 | | | |
| | | | 5.14.4.1 | ascIOmapNumber | |
| | | | 5.14.8 | ascIOmapDescriptionTable | |
| | | | 5.14.8.1 | ascIOmapDescription | |
| 3.5.2.1.11.1.2.2 | Configure I/O Map Input Requirements | | | | |

© 2023 AASHTO / ITE / NEMA Copy Per RTM Distribution Permission

| Requirements Traceability Matrix (RTM) | | | | | |
|---|---|---|---|---|---|
| **FR ID** | **Functional Requirement** | **Dialog ID** | **Object ID** | **Object Name** | **Additional Specifications** |
| 3.5.2.1.11.1.2.2.1 | Configure I/O Map Input Device | 4.2.4 | | | |
| | | | 5.14.4 | ascIOinputMapTable | |
| | | | 5.14.4.1 | ascIOmapNumber | |
| | | | 5.14.4.2 | ascIOinputMapIOindex | |
| | | | 5.14.4.3 | ascIOinputMapDeviceType | |
| | | | 5.14.4.4 | ascIOinputMapDevicePNN | |
| | | | 5.14.4.5 | ascIOinputMapDevicePtype | |
| | | | 5.14.4.6 | ascIOinputMapDeviceAddr | |
| 3.5.2.1.11.1.2.2.2 | Configure I/O Map Input Device Pin | 4.2.4 | | | |
| | | | 5.14.4 | ascIOinputMapTable | |
| | | | 5.14.4.1 | ascIOmapNumber | |
| | | | 5.14.4.2 | ascIOinputMapIOindex | |
| | | | 5.14.4.3 | ascIOinputMapDeviceType | |
| | | | 5.14.4.4 | ascIOinputMapDevicePNN | |
| | | | 5.14.4.5 | ascIOinputMapDevicePtype | |
| | | | 5.14.4.7 | ascIOinputMapDevicePin | |
| 3.5.2.1.11.1.2.2.3 | Configure I/O Map Input Function | 4.2.4 | | | |
| | | | 5.14.4 | ascIOinputMapTable | |
| | | | 5.14.4.1 | ascIOmapNumber | |
| | | | 5.14.4.2 | ascIOinputMapIOindex | |
| | | | 5.14.4.8 | ascIOinputMapFuncType | |
| | | | 5.14.4.9 | ascIOinputMapFuncPtype | |
| | | | 5.14.4.10 | ascIOinputMapFunction | |
| | | | 5.14.4.11 | ascIOinputMapFuncIndex | |
| 3.5.2.1.11.1.2.3 | Configure I/O Map Output Requirements | | | | |

Copy Per RTM Distribution Permission
© 2023 AASHTO / ITE / NEMA

| Requirements Traceability Matrix (RTM) | | | | | |
|---|---|---|---|---|---|
| **FR ID** | **Functional Requirement** | **Dialog ID** | **Object ID** | **Object Name** | **Additional Specifications** |
| 3.5.2.1.11.1.2.3.1 | Configure I/O Map Output Device | 4.2.4 | | | |
| | | | 5.14.6 | asclOoutputMapTable | |
| | | | 5.14.4.1 | asclOmapNumber | |
| | | | 5.14.6.1 | asclOoutputMapIOindex | |
| | | | 5.14.6.2 | asclOoutputMapDeviceType | |
| | | | 5.14.6.3 | asclOoutputMapDevicePNN | |
| | | | 5.14.6.4 | asclOoutputMapDevicePtype | |
| | | | 5.14.6.5 | asclOoutputMapDeviceAddr | |
| 3.5.2.1.11.1.2.3.2 | Configure I/O Map Output Device Pin | 4.2.4 | | | |
| | | | 5.14.6 | asclOoutputMapTable | |
| | | | 5.14.4.1 | asclOmapNumber | |
| | | | 5.14.6.1 | asclOoutputMapIOindex | |
| | | | 5.14.6.2 | asclOoutputMapDeviceType | |
| | | | 5.14.6.3 | asclOoutputMapDevicePNN | |
| | | | 5.14.6.4 | asclOoutputMapDevicePtype | |
| | | | 5.14.6.6 | asclOoutputMapDevicePin | |
| 3.5.2.1.11.1.2.3.3 | Configure I/O Map Output Function | 4.2.4 | | | |
| | | | 5.14.6 | asclOoutputMapTable | |
| | | | 5.14.4.1 | asclOmapNumber | |
| | | | 5.14.6.1 | asclOoutputMapIOindex | |
| | | | 5.14.6.7 | asclOoutputMapFuncType | |
| | | | 5.14.6.8 | asclOoutputMapFuncPtype | |
| | | | 5.14.6.9 | asclOoutputMapFunction | |
| | | | 5.14.6.10 | asclOoutputMapFuncIndex | |
| 3.5.2.1.11.2 | Determine I/O Mapping Requirements | | | | |

© 2023 AASHTO / ITE / NEMA Copy Per RTM Distribution Permission

| Requirements Traceability Matrix (RTM) | | | | | |
|---|---|---|---|---|---|
| **FR ID** | **Functional Requirement** | **Dialog ID** | **Object ID** | **Object Name** | **Additional Specifications** |
| 3.5.2.1.11.2.1 | Retrieve Maximum Number of I/O Maps | G.1 | | | |
| | | | 5.14.1.1 | ascIOmaxMaps | |
| 3.5.2.1.11.2.2 | Retrieve Maximum Number of I/O Map Inputs | G.1 | | | |
| | | | 5.14.2 | ascIOmapMaxInputs | |
| 3.5.2.1.11.2.3 | Retrieve Maximum Number of I/O Map Outputs | G.1 | | | |
| | | | 5.14.3 | ascIOmapMaxOutputs | |
| 3.5.2.1.11.2.4 | Retrieve I/O Mapping Activate Conditions | G.1 | | | |
| | | | 5.14.1.3 | ascIOactivateRequirement | |
| 3.5.2.1.11.2.5 | Retrieve I/O Mapping Input Functions | H.2.5 | | | |
| | | | 5.14.9.1 | ascIOmapMaxInputFunctions | |
| | | | 5.14.9.2 | ascIOmapInputFuncTable | |
| | | | 5.14.9.2.1 | ascIOinputIndex | |
| | | | 5.14.9.2.2 | ascIOinputMaxFuncIndex | |
| | | | 5.14.9.2.3 | ascIOinputFunctionName | |
| 3.5.2.1.11.2.6 | Retrieve I/O Mapping Output Functions | H.2.5 | | | |
| | | | 5.14.10.1 | ascIOmapMaxOutputFunctions | |
| | | | 5.14.10.2 | ascIOmapOutputFuncTable | |
| | | | 5.14.10.2.1 | ascIOoutputIndex | |
| | | | 5.14.10.2.2 | ascIOoutputMaxFuncIndex | |
| | | | 5.14.10.2.3 | ascIOoutputFunctionName | |
| 3.5.2.1.11.2.7 | Retrieve I/O Map Input Device Pin Status | H.2.5 | | | |
| | | | 5.14.1.1 | ascIOmaxMaps | |
| | | | 5.14.2 | ascIOmapMaxInputs | |
| | | | 5.14.4.1 | ascIOmapNumber | |
| | | | 5.14.4.2 | ascIOinputMapIOindex | |
| | | | 5.14.5 | ascIOinputMapStatusTable | |

Copy Per RTM Distribution Permission
© 2023 AASHTO / ITE / NEMA

| Requirements Traceability Matrix (RTM) | | | | | |
|---|---|---|---|---|---|
| **FR ID** | **Functional Requirement** | **Dialog ID** | **Object ID** | **Object Name** | **Additional Specifications** |
| | | | 5.14.5.1 | ascIOinputMapDevPinDescr | |
| | | | 5.14.5.2 | ascIOinputMapDevPinStatus | |
| 3.5.2.1.11.2.8 | Retrieve I/O Map Output Device Pin Status | H.2.5 | | | |
| | | | 5.14.1.1 | ascIOmaxMaps | |
| | | | 5.14.3 | ascIOmapMaxOutputs | |
| | | | 5.14.4.1 | ascIOmapNumber | |
| | | | 5.14.6.1 | ascIOoutputMapIOindex | |
| | | | 5.14.7 | ascIOoutputMapStatusTable | |
| | | | 5.14.7.1 | ascIOoutputMapDevPinDescr | |
| | | | 5.14.7.2 | ascIOoutputMapDevPinStatus | |
| 3.5.2.1.11.2.9 | Enumerate I/O Mapping Device Pin Requirements | | | | |
| 3.5.2.1.11.2.9.1 | Enumerate I/O Map—FIO Inputs | | | | 5.14.11.1 - AscIOmapFIOinputs |
| 3.5.2.1.11.2.9.2 | Enumerate I/O Map—FIO Outputs | | | | 5.14.11.2 - AscIOmapFIOoutputs |
| 3.5.2.1.11.2.9.3 | Enumerate I/O Map—TS1 Inputs | | | | 5.14.12.1 - AscIOmapTS1inputs |
| 3.5.2.1.11.2.9.4 | Enumerate I/O Map—TS1 Outputs | | | | 5.14.12.2 - AscIOmapTS1outputs |
| 3.5.2.1.11.2.9.5 | Enumerate I/O Map—TS2 BIU Inputs | | | | 5.14.13.1 - AscIOmapBIUinputs |
| 3.5.2.1.11.2.9.6 | Enumerate I/O Map—TS2 BIU Outputs | | | | 5.14.13.2 - AscIOmapBIUoutputs |
| 3.5.2.1.11.2.9.7 | Enumerate I/O Map—ITS Cabinet SIU Inputs | | | | 5.14.14.1 - AscIOmapSIUinputs |
| 3.5.2.1.11.2.9.8 | Enumerate I/O Map—ITS Cabinet SIU Outputs | | | | 5.14.14.2 - AscIOmapSIUoutputs |
| 3.5.2.1.11.2.9.9 | Enumerate I/O Map—Auxiliary Device Inputs | | | | 5.14.15.1 - AscIOmapAUXinputs |

© 2023 AASHTO / ITE / NEMA Copy Per RTM Distribution Permission

| Requirements Traceability Matrix (RTM) | | | | | |
|---|---|---|---|---|---|
| **FR ID** | **Functional Requirement** | **Dialog ID** | **Object ID** | **Object Name** | **Additional Specifications** |
| 3.5.2.1.11.2.9.10 | Enumerate I/O Map—Auxiliary Device Outputs | | | | 5.14.15.2 - AscIOmapAUXoutputs |
| 3.5.2.1.12 | Manage Intra-Cabinet Communications Requirements | | | | |
| 3.5.2.1.12.1 | Determine Serial Bus 1 Device Present | H.2.6 | | | |
| | | | 5.15.1 | maxSIUPort1Addresses | |
| | | | 5.15.2 | siuport1Table | |
| | | | 5.15.2.1 | siuport1Number | |
| | | | 5.15.2.2 | siuport1DevicePresent | |
| 3.5.2.1.12.2 | Retrieve Intra-Cabinet Communications Requirements—TS2 | | | | |
| 3.5.2.1.12.2.1 | Determine TS2 Port 1 Device Present | H.2.6 | | | |
| | | | 5.11.1 | maxPort1Addresses | |
| | | | 5.11.2 | port1Table | |
| | | | 5.11.2.1 | port1Number | |
| | | | 5.11.2.2 | port1DevicePresent | |
| 3.5.2.1.12.2.2 | Determine TS2 Port 1 Frame 40 Enable | H.2.6 | | | |
| | | | 5.11.1 | maxPort1Addresses | |
| | | | 5.11.2 | port1Table | |
| | | | 5.11.2.1 | port1Number | |
| | | | 5.11.2.3 | port1Frame40Enable | |
| 3.5.2.1.13 | Manage ADA Support Requirements | | | | |
| 3.5.2.1.13.1 | Configure ADA Support Requirements | | | | |
| 3.5.2.1.13.1.1 | Configure APS Push Button Minimum Press Time | H.2.7 | | | |
| | | | 5.3.7 | pedestrianDetectorTable | |
| | | | 5.3.7.1 | pedestrianDetectorNumber | |
| | | | 5.3.7.8 | pedestrianButtonPushTime | |

Copy Per RTM Distribution Permission
© 2023 AASHTO / ITE / NEMA

| Requirements Traceability Matrix (RTM) | | | | | |
|---|---|---|---|---|---|
| **FR ID** | **Functional Requirement** | **Dialog ID** | **Object ID** | **Object Name** | **Additional Specifications** |
| 3.5.2.1.13.1.2 | Configure APS Push Button to Phase Association | H.2.7 | | | |
| | | | 5.3.7 | pedestrianDetectorTable | |
| | | | 5.3.7.1 | pedestrianDetectorNumber | |
| | | | 5.3.7.2 | pedestrianDetectorCallPhase | |
| 3.5.2.1.13.1.3 | Configure APS Extra Crossing Time | 4.2.2 | | | |
| | | | 5.2.2 | phaseTable | |
| | | | 5.2.2.1 | phaseNumber | |
| | | | 5.2.2.28 | phasePedAlternateClearance | |
| | | | 5.2.2.29 | phasePedAlternateWalk | |
| 3.5.2.1.13.2 | Determine Maximum Number of Pedestrian Buttons | G.1 | | | |
| | | | 5.3.6 | maxPedestrianDetectors | |
| 3.5.2.1.14 | Manage Block Object Requirements | | | | |
| 3.5.2.1.14.1 | Configure Block Object Requirements | | | | |
| 3.5.2.1.14.1.1 | Configure Block Object Get Control Requirements | | | | |
| 3.5.2.1.14.1.1.1 | Configure Block Object Get Control—Phase Data | 4.2.3 | | | |
| | | | 1201v03 – 2.3.1 | dbCreateTransaction | |
| | | | 1201v03 – 2.3.6 | dbVerifyStatus | |
| | | | 1201v03 – 2.3.7 | dbVerifyError | |
| | | | 5.12.2 | ascBlockData | 6.2 – AscPhaseBlock |
| 3.5.2.1.14.1.1.2 | Configure Block Object Get Control—Vehicle Detector Data | 4.2.3 | | | |
| | | | 1201v03 – 2.3.1 | dbCreateTransaction | |

© 2023 AASHTO / ITE / NEMA Copy Per RTM Distribution Permission

| Requirements Traceability Matrix (RTM) | | | | | |
|---|---|---|---|---|---|
| **FR ID** | **Functional Requirement** | **Dialog ID** | **Object ID** | **Object Name** | **Additional Specifications** |
| | | | 1201v03 – 2.3.6 | dbVerifyStatus | |
| | | | 1201v03 – 2.3.7 | dbVerifyError | |
| | | | 5.12.2 | ascBlockData | 6.3 – AscVehDetectorBlock |
| 3.5.2.1.14.1.1.3 | Configure Block Object Get Control—Pedestrian Detector Data | 4.2.3 | | | |
| | | | 1201v03 – 2.3.1 | dbCreateTransaction | |
| | | | 1201v03 – 2.3.6 | dbVerifyStatus | |
| | | | 1201v03 – 2.3.7 | dbVerifyError | |
| | | | 5.12.2 | ascBlockData | 6.4 – AscPedDetectorBlock |
| 3.5.2.1.14.1.1.4 | Configure Block Object Get Control—Pattern Data | 4.2.3 | | | |
| | | | 1201v03 – 2.3.1 | dbCreateTransaction | |
| | | | 1201v03 – 2.3.6 | dbVerifyStatus | |
| | | | 1201v03 – 2.3.7 | dbVerifyError | |
| | | | 5.12.2 | ascBlockData | 6.5 – AscPatternBlock |
| 3.5.2.1.14.1.1.5 | Configure Block Object Get Control—Split Data | 4.2.3 | | | |
| | | | 1201v03 – 2.3.1 | dbCreateTransaction | |
| | | | 1201v03 – 2.3.6 | dbVerifyStatus | |

Copy Per RTM Distribution Permission © 2023 AASHTO / ITE / NEMA

| Requirements Traceability Matrix (RTM) | | | | | |
|---|---|---|---|---|---|
| **FR ID** | **Functional Requirement** | **Dialog ID** | **Object ID** | **Object Name** | **Additional Specifications** |
| | | | 1201v03 – 2.3.7 | dbVerifyError | |
| | | | 5.12.2 | ascBlockData | 6.6 – AscSplitBlock |
| 3.5.2.1.14.1.1.6 | Configure Block Object Get Control—Time Base Data | 4.2.3 | | | |
| | | | 1201v03 – 2.3.1 | dbCreateTransaction | |
| | | | 1201v03 – 2.3.6 | dbVerifyStatus | |
| | | | 1201v03 – 2.3.7 | dbVerifyError | |
| | | | 5.12.2 | ascBlockData | 6.7 – AscTimebaseBlock |
| 3.5.2.1.14.1.1.7 | Configure Block Object Get Control—Preempt Data | 4.2.3 | | | |
| | | | 1201v03 – 2.3.1 | dbCreateTransaction | |
| | | | 1201v03 – 2.3.6 | dbVerifyStatus | |
| | | | 1201v03 – 2.3.7 | dbVerifyError | |
| | | | 5.12.2 | ascBlockData | 6.8 – AscPreemptBlock |
| 3.5.2.1.14.1.1.8 | Configure Block Object Get Control—Sequence Data | 4.2.3 | | | |
| | | | 1201v03 – 2.3.1 | dbCreateTransaction | |
| | | | 1201v03 – 2.3.6 | dbVerifyStatus | |
| | | | 1201v03 – 2.3.7 | dbVerifyError | |
| | | | 5.12.2 | ascBlockData | 6.9 – AscSequenceBlock |

© 2023 AASHTO / ITE / NEMA Copy Per RTM Distribution Permission

| Requirements Traceability Matrix (RTM) | | | | | |
|---|---|---|---|---|---|
| **FR ID** | **Functional Requirement** | **Dialog ID** | **Object ID** | **Object Name** | **Additional Specifications** |
| 3.5.2.1.14.1.1.9 | Configure Block Object Get Control—Channel Data | 4.2.3 | | | |
| | | | 1201v03 – 2.3.1 | dbCreateTransaction | |
| | | | 1201v03 – 2.3.6 | dbVerifyStatus | |
| | | | 1201v03 – 2.3.7 | dbVerifyError | |
| | | | 5.12.2 | ascBlockData | 6.10 – AscChannelBlock |
| 3.5.2.1.14.1.1.10 | Configure Block Object Get Control—Overlap Data | 4.2.3 | | | |
| | | | 1201v03 – 2.3.1 | dbCreateTransaction | |
| | | | 1201v03 – 2.3.6 | dbVerifyStatus | |
| | | | 1201v03 – 2.3.7 | dbVerifyError | |
| | | | 5.12.2 | ascBlockData | 6.11 – AscOverlapBlock |
| 3.5.2.1.14.1.1.11 | Configure Block Object Get Control—Port 1 Data | 4.2.3 | | | |
| | | | 1201v03 – 2.3.1 | dbCreateTransaction | |
| | | | 1201v03 – 2.3.6 | dbVerifyStatus | |
| | | | 1201v03 – 2.3.7 | dbVerifyError | |
| | | | 5.12.2 | ascBlockData | 6.12 – AscPort1Block |
| 3.5.2.1.14.1.1.12 | Configure Block Object Get Control—Schedule Data | 4.2.3 | | | |
| | | | 1201v03 – 2.3.1 | dbCreateTransaction | |

Copy Per RTM Distribution Permission
© 2023 AASHTO / ITE / NEMA

| Requirements Traceability Matrix (RTM) | | | | | |
|---|---|---|---|---|---|
| **FR ID** | **Functional Requirement** | **Dialog ID** | **Object ID** | **Object Name** | **Additional Specifications** |
| | | | 1201v03 – 2.3.6 | dbVerifyStatus | |
| | | | 1201v03 – 2.3.7 | dbVerifyError | |
| | | | 5.12.2 | ascBlockData | 6.13 – AscScheduleBlock |
| 3.5.2.1.14.1.1.13 | Configure Block Object Get Control—Day Plan Data | 4.2.3 | | | |
| | | | 1201v03 – 2.3.1 | dbCreateTransaction | |
| | | | 1201v03 – 2.3.6 | dbVerifyStatus | |
| | | | 1201v03 – 2.3.7 | dbVerifyError | |
| | | | 5.12.2 | ascBlockData | 6.14 – AscDayPlanBlock |
| 3.5.2.1.14.1.1.14 | Configure Block Object Get Control—Event Configuration Data | 4.2.3 | | | |
| | | | 1201v03 – 2.3.1 | dbCreateTransaction | |
| | | | 1201v03 – 2.3.6 | dbVerifyStatus | |
| | | | 1201v03 – 2.3.7 | dbVerifyError | |
| | | | 5.12.2 | ascBlockData | 6.15 – AscEventConfigBlock |
| 3.5.2.1.14.1.1.15 | Configure Block Object Get Control—Event Class Data | 4.2.3 | | | |
| | | | 1201v03 – 2.3.1 | dbCreateTransaction | |
| | | | 1201v03 – 2.3.6 | dbVerifyStatus | |

© 2023 AASHTO / ITE / NEMA Copy Per RTM Distribution Permission

| Requirements Traceability Matrix (RTM) | | | | | |
|---|---|---|---|---|---|
| **FR ID** | **Functional Requirement** | **Dialog ID** | **Object ID** | **Object Name** | **Additional Specifications** |
| | | | 1201v03 – 2.3.7 | dbVerifyError | |
| | | | 5.12.2 | ascBlockData | 6.16 – AscEventClassBlock |
| 3.5.2.1.14.1.1.16 | Configure Block Object Get Control—Dynamic Object Configuration Data | 4.2.3 | | | |
| | | | 1201v03 – 2.3.1 | dbCreateTransaction | |
| | | | 1201v03 – 2.3.6 | dbVerifyStatus | |
| | | | 1201v03 – 2.3.7 | dbVerifyError | |
| | | | 5.12.2 | ascBlockData | 6.17 – AscDynObjConfigBlock. Note: Any attempt to GET or SET this data via STMP shall result in a genError. |
| 3.5.2.1.14.1.1.17 | Configure Block Object Get Control—Dynamic Object Owner Data | 4.2.3 | | | |
| | | | 1201v03 – 2.3.1 | dbCreateTransaction | |
| | | | 1201v03 – 2.3.6 | dbVerifyStatus | |
| | | | 1201v03 – 2.3.7 | dbVerifyError | |
| | | | 5.12.2 | ascBlockData | 6.18 – AscDynObjOwnerBlock. Note: Any attempt to GET or SET this data via STMP shall result in a genError. |

Copy Per RTM Distribution Permission © 2023 AASHTO / ITE / NEMA

| Requirements Traceability Matrix (RTM) | | | | | |
|---|---|---|---|---|---|
| **FR ID** | **Functional Requirement** | **Dialog ID** | **Object ID** | **Object Name** | **Additional Specifications** |
| 3.5.2.1.14.1.1.18 | Configure Block Object Get Control—Dynamic Object Status Data | 4.2.3 | | | |
| | | | 1201v03 – 2.3.1 | dbCreateTransaction | |
| | | | 1201v03 – 2.3.6 | dbVerifyStatus | |
| | | | 1201v03 – 2.3.7 | dbVerifyError | |
| | | | 5.12.2 | ascBlockData | 6.19 – AscDynObjStatusBlock. Note: Any attempt to GET or SET this data via STMP shall result in a genError. |
| | | | | | |
| 3.5.2.1.14.1.1.19 | Configure Block Object Get Control—Miscellaneous ASC Data | 4.2.3 | | | |
| | | | 1201v03 – 2.3.1 | dbCreateTransaction | |
| | | | 1201v03 – 2.3.6 | dbVerifyStatus | |
| | | | 1201v03 – 2.3.7 | dbVerifyError | |
| | | | 5.12.2 | ascBlockData | 6.20 – AscMiscBlock |
| 3.5.2.1.14.1.1.20 | Configure Block Object Get Control—Version 3 Additional Phase Data | 4.2.3 | | | |
| | | | 1201v03 – 2.3.1 | dbCreateTransaction | |
| | | | 1201v03 – 2.3.6 | dbVerifyStatus | |
| | | | 1201v03 – 2.3.7 | dbVerifyError | |

© 2023 AASHTO / ITE / NEMA Copy Per RTM Distribution Permission

| Requirements Traceability Matrix (RTM) | | | | | |
|---|---|---|---|---|---|
| **FR ID** | **Functional Requirement** | **Dialog ID** | **Object ID** | **Object Name** | **Additional Specifications** |
| | | | 5.12.2 | ascBlockData | 6.21 – AscPhase2Block |
| 3.5.2.1.14.1.1.21 | Configure Block Object Get Control—Version 3 Additional Vehicle Detector Data | 4.2.3 | | | |
| | | | 1201v03 – 2.3.1 | dbCreateTransaction | |
| | | | 1201v03 – 2.3.6 | dbVerifyStatus | |
| | | | 1201v03 – 2.3.7 | dbVerifyError | |
| | | | 5.12.2 | ascBlockData | 6.22 – AscVehDetector2Block |
| 3.5.2.1.14.1.1.22 | Configure Block Object Get Control—Version 3 Vehicle Detector Volume Occupancy Report Data | 4.2.3 | | | |
| | | | 1201v03 – 2.3.1 | dbCreateTransaction | |
| | | | 1201v03 – 2.3.6 | dbVerifyStatus | |
| | | | 1201v03 – 2.3.7 | dbVerifyError | |
| | | | 5.12.2 | ascBlockData | 6.23 – AscVehDetVolOccV3Block |
| 3.5.2.1.14.1.1.23 | Configure Block Object Get Control—Version 3 Additional Pedestrian Detector Data [Deprecated] | 4.2.3 | | | |
| | | | 1201v03 – 2.3.1 | dbCreateTransaction | |
| | | | 1201v03 – 2.3.6 | dbVerifyStatus | |
| | | | 1201v03 – 2.3.7 | dbVerifyError | |

Copy Per RTM Distribution Permission
© 2023 AASHTO / ITE / NEMA

| Requirements Traceability Matrix (RTM) | | | | | |
|---|---|---|---|---|---|
| **FR ID** | **Functional Requirement** | **Dialog ID** | **Object ID** | **Object Name** | **Additional Specifications** |
| | | | 5.12.2 | ascBlockData | 6.24 – AscPedDetector2Block |
| 3.5.2.1.14.1.1.24 | Configure Block Object Get Control—Version 3 Pedestrian Detector Report Data | 4.2.3 | | | |
| | | | 1201v03 – 2.3.1 | dbCreateTransaction | |
| | | | 1201v03 – 2.3.6 | dbVerifyStatus | |
| | | | 1201v03 – 2.3.7 | dbVerifyError | |
| | | | 5.12.2 | ascBlockData | 6.25 – AscPedDetectorReportBlock |
| 3.5.2.1.14.1.1.25 | Configure Block Object Get Control—Version 3 Pedestrian Push Button Configuration Data | 4.2.3 | | | |
| | | | 1201v03 – 2.3.1 | dbCreateTransaction | |
| | | | 1201v03 – 2.3.6 | dbVerifyStatus | |
| | | | 1201v03 – 2.3.7 | dbVerifyError | |
| | | | 5.12.2 | ascBlockData | 6.26 – AscPedButtonConfigBlock |
| 3.5.2.1.14.1.1.26 | Configure Block Object Get Control—Version 3 Additional Pattern Data [Deprecated] | 4.2.3 | | | |
| | | | 1201v03 – 2.3.1 | dbCreateTransaction | |
| | | | 1201v03 – 2.3.6 | dbVerifyStatus | |
| | | | 1201v03 – 2.3.7 | dbVerifyError | |

© 2023 AASHTO / ITE / NEMA Copy Per RTM Distribution Permission

| Requirements Traceability Matrix (RTM) | | | | | |
|---|---|---|---|---|---|
| **FR ID** | **Functional Requirement** | **Dialog ID** | **Object ID** | **Object Name** | **Additional Specifications** |
| | | | 5.12.2 | ascBlockData | 6.27 – AscPattern2Block |
| 3.5.2.1.14.1.1.27 | Configure Block Object Get Control—Version 3 Additional Split Data | 4.2.3 | | | |
| | | | 1201v03 – 2.3.1 | dbCreateTransaction | |
| | | | 1201v03 – 2.3.6 | dbVerifyStatus | |
| | | | 1201v03 – 2.3.7 | dbVerifyError | |
| | | | 5.12.2 | ascBlockData | 6.28 – AscSplit2Block |
| 3.5.2.1.14.1.1.28 | Configure Block Object Get Control—Version 3 Additional Preempt Data | 4.2.3 | | | |
| | | | 1201v03 – 2.3.1 | dbCreateTransaction | |
| | | | 1201v03 – 2.3.6 | dbVerifyStatus | |
| | | | 1201v03 – 2.3.7 | dbVerifyError | |
| | | | 5.12.2 | ascBlockData | 6.29 – AscPreempt2Block |
| 3.5.2.1.14.1.1.29 | Configure Block Object Get Control—Version 3 Preempt Queue Delay Data | 4.2.3 | | | |
| | | | 1201v03 – 2.3.1 | dbCreateTransaction | |
| | | | 1201v03 – 2.3.6 | dbVerifyStatus | |
| | | | 1201v03 – 2.3.7 | dbVerifyError | |
| | | | 5.12.2 | ascBlockData | 6.30 – AscPreemptQueueDelay Block |

Copy Per RTM Distribution Permission © 2023 AASHTO / ITE / NEMA

| Requirements Traceability Matrix (RTM) | | | | | |
|---|---|---|---|---|---|
| **FR ID** | **Functional Requirement** | **Dialog ID** | **Object ID** | **Object Name** | **Additional Specifications** |
| 3.5.2.1.14.1.1.30 | Configure Block Object Get Control—Version 3 Additional Channel Data [Deprecated] | 4.2.3 | | | |
| | | | 1201v03 – 2.3.1 | dbCreateTransaction | |
| | | | 1201v03 – 2.3.6 | dbVerifyStatus | |
| | | | 1201v03 – 2.3.7 | dbVerifyError | |
| | | | 5.12.2 | ascBlockData | 6.31 – AscChannel2Block |
| 3.5.2.1.14.1.1.31 | Configure Block Object Get Control—Version 3 Additional Overlap Data | 4.2.3 | | | |
| | | | 1201v03 – 2.3.1 | dbCreateTransaction | |
| | | | 1201v03 – 2.3.6 | dbVerifyStatus | |
| | | | 1201v03 – 2.3.7 | dbVerifyError | |
| | | | 5.12.2 | ascBlockData | 6.32 – AscOverlap2Block |
| 3.5.2.1.14.1.1.32 | Configure Block Object Get Control—Communications Port Definition Data | 4.2.3 | | | |
| | | | 1201v03 – 2.3.1 | dbCreateTransaction | |
| | | | 1201v03 – 2.3.6 | dbVerifyStatus | |
| | | | 1201v03 – 2.3.7 | dbVerifyError | |
| | | | 5.12.2 | ascBlockData | 6.33 – AscCommPortDefBlock |

© 2023 AASHTO / ITE / NEMA Copy Per RTM Distribution Permission

| Requirements Traceability Matrix (RTM) | | | | | |
|---|---|---|---|---|---|
| **FR ID** | **Functional Requirement** | **Dialog ID** | **Object ID** | **Object Name** | **Additional Specifications** |
| 3.5.2.1.14.1.1.33 | Configure Block Object Get Control—Ethernet Communications Port Definition Data | 4.2.3 | | | |
| | | | 1201v03 – 2.3.1 | dbCreateTransaction | |
| | | | 1201v03 – 2.3.6 | dbVerifyStatus | |
| | | | 1201v03 – 2.3.7 | dbVerifyError | |
| | | | 5.12.2 | ascBlockData | 6.34 – AscEthernetCommPortDefBlock |
| 3.5.2.1.14.1.1.34 | Configure Block Object Get Control—SIU Communications Port 1 Definition Data | 4.2.3 | | | |
| | | | 1201v03 – 2.3.1 | dbCreateTransaction | |
| | | | 1201v03 – 2.3.6 | dbVerifyStatus | |
| | | | 1201v03 – 2.3.7 | dbVerifyError | |
| | | | 5.12.2 | ascBlockData | 6.35 – AscSiuPort1Block |
| 3.5.2.1.14.1.1.35 | Configure Block Object Get Control—Version 3 Additional Miscellaneous ASC Data | 4.2.3 | | | |
| | | | 1201v03 – 2.3.1 | dbCreateTransaction | |
| | | | 1201v03 – 2.3.6 | dbVerifyStatus | |
| | | | 1201v03 – 2.3.7 | dbVerifyError | |
| | | | 5.12.2 | ascBlockData | 6.36 – AscMisc2Block |

Copy Per RTM Distribution Permission © 2023 AASHTO / ITE / NEMA

| Requirements Traceability Matrix (RTM) | | | | | |
|---|---|---|---|---|---|
| **FR ID** | **Functional Requirement** | **Dialog ID** | **Object ID** | **Object Name** | **Additional Specifications** |
| 3.5.2.1.14.1.1.36 | Configure Block Object Get Control—User-Defined Backup Timer Content Data | 4.2.3 | | | |
| | | | 1201v03 – 2.3.1 | dbCreateTransaction | |
| | | | 1201v03 – 2.3.6 | dbVerifyStatus | |
| | | | 1201v03 – 2.3.7 | dbVerifyError | |
| | | | 5.12.2 | ascBlockData | 6.37 – AscUserDefinedBackupTimerBlock |
| 3.5.2.1.14.1.1.37 | Configure Block Object Get Control—ASC Location Data | 4.2.3 | | | |
| | | | 1201v03 – 2.3.1 | dbCreateTransaction | |
| | | | 1201v03 – 2.3.6 | dbVerifyStatus | |
| | | | 1201v03 – 2.3.7 | dbVerifyError | |
| | | | 5.12.2 | ascBlockData | 6.38 – AscLocationBlock |
| 3.5.2.1.14.1.1.38 | Configure Block Object Get Control—Global Set ID Data | 4.2.3 | | | |
| | | | 1201v03 – 2.3.1 | dbCreateTransaction | |
| | | | 1201v03 – 2.3.6 | dbVerifyStatus | |
| | | | 1201v03 – 2.3.7 | dbVerifyError | |
| | | | 5.12.2 | ascBlockData | 6.39 – AscGlobalSetIDBlock |

© 2023 AASHTO / ITE / NEMA Copy Per RTM Distribution Permission

| Requirements Traceability Matrix (RTM) | | | | | |
|---|---|---|---|---|---|
| **FR ID** | **Functional Requirement** | **Dialog ID** | **Object ID** | **Object Name** | **Additional Specifications** |
| 3.5.2.1.14.1.1.39 | Configure Block Object Get Control—ASC Environmental Monitoring Data | 4.2.3 | | | |
| | | | 1201v03 – 2.3.1 | dbCreateTransaction | |
| | | | 1201v03 – 2.3.6 | dbVerifyStatus | |
| | | | 1201v03 – 2.3.7 | dbVerifyError | |
| | | | 5.12.2 | ascBlockData | 6.40 – AscEnvironMonitorBlock |
| 3.5.2.1.14.1.1.40 | Configure Block Object Get Control—ASC Cabinet Temperature Sensor Data | 4.2.3 | | | |
| | | | 1201v03 – 2.3.1 | dbCreateTransaction | |
| | | | 1201v03 – 2.3.6 | dbVerifyStatus | |
| | | | 1201v03 – 2.3.7 | dbVerifyError | |
| | | | 5.12.2 | ascBlockData | 6.41 – AscCabinetTemperature SensorBlock |
| | | | | | |
| 3.5.2.1.14.1.1.41 | Configure Block Object Get Control—ASC Cabinet Humidity Sensor Data | 4.2.3 | | | |
| | | | 1201v03 – 2.3.1 | dbCreateTransaction | |
| | | | 1201v03 – 2.3.6 | dbVerifyStatus | |
| | | | 1201v03 – 2.3.7 | dbVerifyError | |

Copy Per RTM Distribution Permission © 2023 AASHTO / ITE / NEMA

| Requirements Traceability Matrix (RTM) | | | | | |
|---|---|---|---|---|---|
| **FR ID** | **Functional Requirement** | **Dialog ID** | **Object ID** | **Object Name** | **Additional Specifications** |
| | | | 5.12.2 | ascBlockData | 6.42 – AscCabinetHumiditySensorBlock |
| 3.5.2.1.14.1.1.42 | Configure Block Object Get Control—I/O Input Mapping Data | 4.2.3 | | | |
| | | | 1201v03 – 2.3.1 | dbCreateTransaction | |
| | | | 1201v03 – 2.3.6 | dbVerifyStatus | |
| | | | 1201v03 – 2.3.7 | dbVerifyError | |
| | | | 5.12.2 | ascBlockData | 6.43 – AscIOinputMapBlock |
| 3.5.2.1.14.1.1.43 | Configure Block Object Get Control—I/O Input Mapping Status Data [Deprecated] | 4.2.3 | | | |
| | | | 1201v03 – 2.3.1 | dbCreateTransaction | |
| | | | 1201v03 – 2.3.6 | dbVerifyStatus | |
| | | | 1201v03 – 2.3.7 | dbVerifyError | |
| | | | 5.12.2 | ascBlockData | 6.44 – AscIOinputStatusBlock |
| 3.5.2.1.14.1.1.44 | Configure Block Object Get Control—I/O Output Mapping Data | 4.2.3 | | | |
| | | | 1201v03 – 2.3.1 | dbCreateTransaction | |
| | | | 1201v03 – 2.3.6 | dbVerifyStatus | |
| | | | 1201v03 – 2.3.7 | dbVerifyError | |

© 2023 AASHTO / ITE / NEMA Copy Per RTM Distribution Permission

| Requirements Traceability Matrix (RTM) | | | | | |
|---|---|---|---|---|---|
| **FR ID** | **Functional Requirement** | **Dialog ID** | **Object ID** | **Object Name** | **Additional Specifications** |
| | | | 5.12.2 | ascBlockData | 6.45 – AscIOoutputMapBlock |
| 3.5.2.1.14.1.1.45 | Configure Block Object Get Control—I/O Output Mapping Status Data [Deprecated] | 4.2.3 | | | |
| | | | 1201v03 – 2.3.1 | dbCreateTransaction | |
| | | | 1201v03 – 2.3.6 | dbVerifyStatus | |
| | | | 1201v03 – 2.3.7 | dbVerifyError | |
| | | | 5.12.2 | ascBlockData | 6.46 – AscIOoutputStatusBlock |
| 3.5.2.1.14.1.1.46 | Configure Block Object Get Control—I/O Mapping Description Data | 4.2.3 | | | |
| | | | 1201v03 – 2.3.1 | dbCreateTransaction | |
| | | | 1201v03 – 2.3.6 | dbVerifyStatus | |
| | | | 1201v03 – 2.3.7 | dbVerifyError | |
| | | | 5.12.2 | ascBlockData | 6.47 – AscIOMapDescriptionBlock |
| 3.5.2.1.14.1.1.47 | Configure Block Object Get Control—Connected Vehicle Configuration Data [Deprecated] | 4.2.3 | | | |
| | | | 1201v03 – 2.3.1 | dbCreateTransaction | |
| | | | 1201v03 – 2.3.6 | dbVerifyStatus | |
| | | | 1201v03 – 2.3.7 | dbVerifyError | |

Copy Per RTM Distribution Permission © 2023 AASHTO / ITE / NEMA

| Requirements Traceability Matrix (RTM) | | | | | |
|---|---|---|---|---|---|
| **FR ID** | **Functional Requirement** | **Dialog ID** | **Object ID** | **Object Name** | **Additional Specifications** |
| | | | 5.12.2 | ascBlockData | 6.48 – AscCvConfigBlock |
| 3.5.2.1.14.1.1.48 | Configure Block Object Get Control—Connected Vehicle RSU Port Configuration Data | 4.2.3 | | | |
| | | | 1201v03 – 2.3.1 | dbCreateTransaction | |
| | | | 1201v03 – 2.3.6 | dbVerifyStatus | |
| | | | 1201v03 – 2.3.7 | dbVerifyError | |
| | | | 5.12.2 | ascBlockData | 6.49 – AscCvRsuPortConfigBlock |
| 3.5.2.1.14.1.1.49 | Configure Block Object Get Control—SPaT Lanes Concurrency Data | 4.2.3 | | | |
| | | | 1201v03 – 2.3.1 | dbCreateTransaction | |
| | | | 1201v03 – 2.3.6 | dbVerifyStatus | |
| | | | 1201v03 – 2.3.7 | dbVerifyError | |
| | | | 5.12.2 | ascBlockData | 6.50 – AscCvSpatLanesConcurrencyConfigBlock |
| 3.5.2.1.14.1.1.50 | Configure Block Object Get Control—Connected Vehicle SPaT RSU Port Configuration Data | 4.2.3 | | | |
| | | | 1201v03 – 2.3.1 | dbCreateTransaction | |
| | | | 1201v03 – 2.3.6 | dbVerifyStatus | |

© 2023 AASHTO / ITE / NEMA Copy Per RTM Distribution Permission

| Requirements Traceability Matrix (RTM) | | | | | |
|---|---|---|---|---|---|
| **FR ID** | **Functional Requirement** | **Dialog ID** | **Object ID** | **Object Name** | **Additional Specifications** |
| | | | 1201v03 – 2.3.7 | dbVerifyError | |
| | | | 5.12.2 | ascBlockData | 6.51 – AscCvSpatRsuConfigBlock |
| 3.5.2.1.14.1.1.51 | Configure Block Object Get Control—Connected Vehicle Detector Configuration Data [Deprecated] | 4.2.3 | | | |
| | | | 1201v03 – 2.3.1 | dbCreateTransaction | |
| | | | 1201v03 – 2.3.6 | dbVerifyStatus | |
| | | | 1201v03 – 2.3.7 | dbVerifyError | |
| | | | 5.12.2 | ascBlockData | 6.52 – AscCvDetectorConfigBlock |
| 3.5.2.1.14.1.1.52 | Configure Block Object Get Control—Connected Vehicle Detection Zone Configuration Data [Deprecated] | 4.2.3 | | | |
| | | | 1201v03 – 2.3.1 | dbCreateTransaction | |
| | | | 1201v03 – 2.3.6 | dbVerifyStatus | |
| | | | 1201v03 – 2.3.7 | dbVerifyError | |
| | | | 5.12.2 | ascBlockData | 6.53 – AscCvDetectionZoneConfigBlock |
| 3.5.2.1.14.1.1.53 | Configure Block Object Get Control—Connected Vehicle Detection Report Data | 4.2.3 | | | |

Copy Per RTM Distribution Permission
© 2023 AASHTO / ITE / NEMA

| Requirements Traceability Matrix (RTM) | | | | | |
|---|---|---|---|---|---|
| **FR ID** | **Functional Requirement** | **Dialog ID** | **Object ID** | **Object Name** | **Additional Specifications** |
| | | | 1201v03 – 2.3.1 | dbCreateTransaction | |
| | | | 1201v03 – 2.3.6 | dbVerifyStatus | |
| | | | 1201v03 – 2.3.7 | dbVerifyError | |
| | | | 5.12.2 | ascBlockData | 6.54 – AscCvDetectionReportBlock |
| 3.5.2.1.14.1.1.54 | Configure Block Object Get Control—Additional Pattern Data | 4.2.3 | | | |
| | | | 1201v03 – 2.3.1 | dbCreateTransaction | |
| | | | 1201v03 – 2.3.6 | dbVerifyStatus | |
| | | | 1201v03 – 2.3.7 | dbVerifyError | |
| | | | 5.12.2 | ascBlockData | 6.56 – AscPattern3Block |
| 3.5.2.1.14.1.1.55 | Configure Block Object Get Control—Connected Vehicle Configuration 2 Data | 4.2.3 | | | |
| | | | 1201v03 – 2.3.1 | dbCreateTransaction | |
| | | | 1201v03 – 2.3.6 | dbVerifyStatus | |
| | | | 1201v03 – 2.3.7 | dbVerifyError | |
| | | | 5.12.2 | ascBlockData | 6.55 – AscCvConfig2Block |
| 3.5.2.1.14.1.2 | Configure Block Data | 4.2.3 | | | |
| | | | 1201v03 – 2.3.1 | dbCreateTransaction | |

© 2023 AASHTO / ITE / NEMA Copy Per RTM Distribution Permission

| Requirements Traceability Matrix (RTM) | | | | | |
|---|---|---|---|---|---|
| **FR ID** | **Functional Requirement** | **Dialog ID** | **Object ID** | **Object Name** | **Additional Specifications** |
| | | | 1201v03 – 2.3.6 | dbVerifyStatus | |
| | | | 1201v03 – 2.3.7 | dbVerifyError | |
| | | | 5.12.2 | ascBlockData | |
| 3.5.2.1.14.2 | Retrieve Block Object Requirements | | | | |
| 3.5.2.1.14.2.1 | Monitor Block Object Get Control | 4.2.1 | | | |
| | | | 5.12.1 | ascBlockGetControl | |
| 3.5.2.1.14.2.2 | Monitor Block Data | 4.2.1 | | | |
| | | | 5.12.2 | ascBlockData | |
| 3.5.2.1.14.2.3 | Monitor Block Error Status Requirements | | | | |
| 3.5.2.1.14.2.3.1 | Monitor Block Error Status—Set/Get Command Attempt | 4.2.1 | | | |
| | | | 5.12.3 | ascBlockErrorStatus | |
| 3.5.2.1.14.2.3.2 | Monitor Block Error Status—Configuration Validity Check Error | 4.2.1 | | | |
| | | | 5.12.3 | ascBlockErrorStatus | |
| 3.5.2.1.14.2.3.3 | Monitor Block Error Status—Value Set Validity Check Error | 4.2.1 | | | |
| | | | 5.12.3 | ascBlockErrorStatus | |
| 3.5.2.1.14.2.3.4 | Monitor Block Error Status—Error-Causing Data Element | 4.2.1 | | | |
| | | | 5.12.3 | ascBlockErrorStatus | |
| 3.5.2.2 | Monitor Signal Operations Requirements | | | | |
| 3.5.2.2.1 | Determine Controller Health Requirements | | | | |
| 3.5.2.2.1.1 | Determine Alarm Status Requirements | | | | |
| 3.5.2.2.1.1.1 | Monitor Preempt Active | G.1 | | | |
| | | | 5.4.9 | shortAlarmStatus | Bit 0 |
| 3.5.2.2.1.1.2 | Monitor Terminal and Facilities Flash | G.1 | | | |

Copy Per RTM Distribution Permission © 2023 AASHTO / ITE / NEMA

| Requirements Traceability Matrix (RTM) | | | | | |
|---|---|---|---|---|---|
| **FR ID** | **Functional Requirement** | **Dialog ID** | **Object ID** | **Object Name** | **Additional Specifications** |
| | | | 5.4.9 | shortAlarmStatus | Bit 1 |
| 3.5.2.2.1.1.3 | Monitor Local Cycle Zero Alarm | G.1 | | | |
| | | | 5.4.9 | shortAlarmStatus | Bit 2 |
| 3.5.2.2.1.1.4 | Monitor Local Override | G.1 | | | |
| | | | 5.4.9 | shortAlarmStatus | Bit 3 |
| 3.5.2.2.1.1.5 | Monitor Coordination Alarm | G.1 | | | |
| | | | 5.4.9 | shortAlarmStatus | Bit 4 |
| 3.5.2.2.1.1.6 | Monitor Detector Fault | G.1 | | | |
| | | | 5.4.9 | shortAlarmStatus | Bit 5 |
| 3.5.2.2.1.1.7 | Monitor Non-Critical Alarm | G.1 | | | |
| | | | 5.4.9 | shortAlarmStatus | Bit 6 |
| 3.5.2.2.1.1.8 | Monitor Stop Time Input Alarm | G.1 | | | |
| | | | 5.4.9 | shortAlarmStatus | Bit 7 |
| 3.5.2.2.1.1.9 | Monitor Cycle Fault Alarm | G.1 | | | |
| | | | 5.4.8 | unitAlarmStatus1 | Bit 0 |
| 3.5.2.2.1.1.10 | Monitor Coordination Fault | G.1 | | | |
| | | | 5.4.8 | unitAlarmStatus1 | Bit 1 |
| 3.5.2.2.1.1.11 | Monitor Coordination Fail Alarm | G.1 | | | |
| | | | 5.4.8 | unitAlarmStatus1 | Bit 2 |
| 3.5.2.2.1.1.12 | Monitor Cycle Fail Alarm | G.1 | | | |
| | | | 5.4.8 | unitAlarmStatus1 | Bit 3 |
| 3.5.2.2.1.1.13 | Monitor SMU Flash Alarm | G.1 | | | |
| | | | 5.4.8 | unitAlarmStatus1 | Bit 4 |
| 3.5.2.2.1.1.14 | Monitor Local Flash Alarm | G.1 | | | |
| | | | 5.4.8 | unitAlarmStatus1 | Bit 5 |
| 3.5.2.2.1.1.15 | Monitor Local Free Alarm | G.1 | | | |
| | | | 5.4.8 | unitAlarmStatus1 | Bit 6 |
| 3.5.2.2.1.1.16 | Monitor Coordination Active Alarm | G.1 | | | |

© 2023 AASHTO / ITE / NEMA Copy Per RTM Distribution Permission

| Requirements Traceability Matrix (RTM) | | | | | |
|---|---|---|---|---|---|
| **FR ID** | **Functional Requirement** | **Dialog ID** | **Object ID** | **Object Name** | **Additional Specifications** |
| | | | 5.4.8 | unitAlarmStatus1 | Bit 7 |
| 3.5.2.2.1.1.17 | Monitor Power Restart Alarm | G.1 | | | |
| | | | 5.4.7 | unitAlarmStatus2 | Bit 0 |
| 3.5.2.2.1.1.18 | Monitor Low Battery Alarm | G.1 | | | |
| | | | 5.4.7 | unitAlarmStatus2 | Bit 1 |
| 3.5.2.2.1.1.19 | Monitor Response Fault Alarm | G.1 | | | |
| | | | 5.4.7 | unitAlarmStatus2 | Bit 2 |
| 3.5.2.2.1.1.20 | Monitor External Start | G.1 | | | |
| | | | 5.4.7 | unitAlarmStatus2 | Bit 3 |
| 3.5.2.2.1.1.21 | Monitor Stop Time Alarm | G.1 | | | |
| | | | 5.4.7 | unitAlarmStatus2 | Bit 4 |
| 3.5.2.2.1.1.22 | Monitor Offset Transitioning Alarm | G.1 | | | |
| | | | 5.4.7 | unitAlarmStatus2 | Bit 5 |
| 3.5.2.2.1.1.23 | Monitor Stall Condition | G.1 | | | |
| | | | 5.4.7 | unitAlarmStatus2 | Bit 6 |
| 3.5.2.2.1.1.24 | Monitor Memory Fault | G.1 | | | |
| | | | 5.4.27 | unitAlarmStatus4 | Bit 0 |
| 3.5.2.2.1.1.25 | Monitor Process Failure | G.1 | | | |
| | | | 5.4.7 | unitAlarmStatus2 | Bit 7 |
| 3.5.2.2.1.1.26 | Monitor Communications Timeout | G.1 | | | |
| | | | 5.4.26 | unitAlarmStatus3 | Bit 0 |
| 3.5.2.2.1.1.27 | Monitor Power Problems | G.1 | | | |
| | | | 5.4.26 | unitAlarmStatus3 | Bit 5 |
| 3.5.2.2.1.1.28 | Monitor UPS Errors | G.1 | | | |
| | | | 5.4.26 | unitAlarmStatus3 | Bit 3 |
| 3.5.2.2.1.1.29 | Monitor Scheduler Errors | G.1 | | | |
| | | | 5.4.27 | unitAlarmStatus4 | Bit 4 |
| 3.5.2.2.1.1.30 | Monitor Signal Monitor Communications Error | G.1 | | | |

Copy Per RTM Distribution Permission
© 2023 AASHTO / ITE / NEMA

| Requirements Traceability Matrix (RTM) | | | | | |
|---|---|---|---|---|---|
| **FR ID** | **Functional Requirement** | **Dialog ID** | **Object ID** | **Object Name** | **Additional Specifications** |
| | | | 5.4.26 | unitAlarmStatus3 | Bit 2 |
| 3.5.2.2.1.1.31 | Monitor Signal Monitor Unit Presence | G.1 | | | |
| | | | 5.4.26 | unitAlarmStatus3 | Bit 1 |
| 3.5.2.2.1.1.32 | Monitor USB Memory Device | G.1 | | | |
| | | | 5.4.27 | unitAlarmStatus4 | Bit 5 |
| 3.5.2.2.1.1.33 | Monitor ASC Cabinet Temperature Alarm | G.1 | | | |
| | | | 5.4.27 | unitAlarmStatus4 | Bit 2 |
| 3.5.2.2.1.1.34 | Monitor ASC Cabinet Humidity Alarm | G.1 | | | |
| | | | 5.4.27 | unitAlarmStatus4 | Bit 2 |
| 3.5.2.2.1.1.35 | Monitor Clock Failure | G.1 | | | |
| | | | 5.4.27 | unitAlarmStatus4 | Bit 3 |
| 3.5.2.2.1.1.36 | Monitor Preempt Maximum Presence Alarm | G.1 | | | |
| | | | 5.4.27 | unitAlarmStatus4 | Bit 1 |
| 3.5.2.2.1.1.37 | Monitor RSU Watchdog Timer | G.1 | | | |
| | | | 5.4.26 | unitAlarmStatus3 | Bit 4 |
| 3.5.2.2.1.1.38 | Monitor CV Certificate Faults | G.1 | | | |
| | | | 5.4.26 | unitAlarmStatus3 | Bit 6 |
| 3.5.2.2.1.2 | Monitor Alarm Group State | H.2.5 | | | |
| | | | 5.4.11 | maxAlarmGroups | |
| | | | 5.4.12 | alarmGroupTable | |
| | | | 5.4.12.1 | alarmGroupNumber | |
| | | | 5.4.12.2 | alarmGroupState | |
| 3.5.2.2.2 | Retrieve Mode of Operation Requirements | | | | |
| 3.5.2.2.2.1 | Monitor Unit Control Status | G.1 | | | |
| | | | 5.4.5 | unitControlStatus | |
| 3.5.2.2.2.2 | Monitor External Minimum Recall | G.1 | | | |
| | | | 5.4.10 | unitControl | |
| 3.5.2.2.2.3 | Monitor Call to Non-Actuated 1 | G.1 | | | |

© 2023 AASHTO / ITE / NEMA Copy Per RTM Distribution Permission

| Requirements Traceability Matrix (RTM) | | | | | |
|---|---|---|---|---|---|
| **FR ID** | **Functional Requirement** | **Dialog ID** | **Object ID** | **Object Name** | **Additional Specifications** |
| | | | 5.4.10 | unitControl | |
| 3.5.2.2.2.4 | Monitor Call to Non-Actuated 2 | G.1 | | | |
| | | | 5.4.10 | unitControl | |
| 3.5.2.2.2.5 | Monitor Walk Rest Modifier | G.1 | | | |
| | | | 5.4.10 | unitControl | |
| 3.5.2.2.2.6 | Monitor Interconnect | G.1 | | | |
| | | | 5.4.10 | unitControl | |
| 3.5.2.2.2.7 | Monitor Dimming Enabled | G.1 | | | |
| | | | 5.4.10 | unitControl | |
| 3.5.2.2.2.8 | Monitor Unit Flash Status | G.1 | | | |
| | | | 5.4.6 | unitFlashStatus | |
| 3.5.2.2.2.9 | Monitor Current Timing Pattern Requirements | | | | |
| 3.5.2.2.2.9.1 | Monitor Current Pattern Status | G.1 | | | |
| | | | 5.5.10 | coordPatternStatus | |
| 3.5.2.2.2.9.2 | Monitor Local Free Status | G.1 | | | |
| | | | 5.5.11 | localFreeStatus | |
| 3.5.2.2.2.9.3 | Monitor Current Mode of Operation | G.1 | | | |
| | | | 5.5.1 | coordOperationalMode | |
| 3.5.2.2.2.9.4 | Monitor Programmed Pattern | G.1 | | | |
| | | | 5.5.14 | systemPatternControl | |
| 3.5.2.2.2.10 | Monitor Current Cycle Requirements | | | | |
| 3.5.2.2.2.10.1 | Monitor Coordination Cycle Status | G.1 | | | |
| | | | 5.5.12 | coordCycleStatus | |
| 3.5.2.2.2.10.2 | Monitor Coordination Synchronization Status | G.1 | | | |
| | | | 5.5.13 | coordSyncStatus | |
| 3.5.2.2.2.10.3 | Monitor Current Split | H.2.5 | | | |
| | | | 5.5.5 | maxPatterns | |
| | | | 5.5.6 | patternTableType | |

Copy Per RTM Distribution Permission
© 2023 AASHTO / ITE / NEMA

| Requirements Traceability Matrix (RTM) | | | | | |
|---|---|---|---|---|---|
| **FR ID** | **Functional Requirement** | **Dialog ID** | **Object ID** | **Object Name** | **Additional Specifications** |
| | | | 5.5.7 | patternTable | |
| | | | 5.5.7.1 | patternNumber | |
| | | | 5.5.7.4 | patternSplitNumber | |
| | | | 5.5.8 | maxSplits | |
| | | | 5.5.9 | splitTable | |
| | | | 5.5.9.1 | splitNumber | |
| | | | 5.5.9.2 | splitPhase | |
| | | | 5.5.9.3 | splitTime | |
| | | | 5.5.10 | coordPatternStatus | |
| 3.5.2.2.2.10.4 | Monitor Current Offset | H.2.5 | | | |
| | | | 5.5.5 | maxPatterns | |
| | | | 5.5.6 | patternTableType | |
| | | | 5.5.7 | patternTable | |
| | | | 5.5.7.1 | patternNumber | |
| | | | 5.5.7.3 | patternOffsetTime | |
| | | | 5.5.14 | systemPatternControl | |
| 3.5.2.2.3 | Monitor Current Signal Indications Requirements | | | | |
| 3.5.2.2.3.1 | Determine Maximum Number of Phase Groups | G.1 | | | |
| | | | 5.2.3 | maxPhaseGroups | |
| 3.5.2.2.3.2 | Monitor Phase Group Reds | H.2.5 | | | |
| | | | 5.2.3 | maxPhaseGroups | |
| | | | 5.2.4 | phaseStatusGroupTable | |
| | | | 5.2.4.1 | phaseStatusGroupNumber | |
| | | | 5.2.4.2 | phaseStatusGroupReds | |
| 3.5.2.2.3.3 | Monitor Phase Group Yellows | H.2.5 | | | |
| | | | 5.2.3 | maxPhaseGroups | |

© 2023 AASHTO / ITE / NEMA Copy Per RTM Distribution Permission

| Requirements Traceability Matrix (RTM) | | | | | |
|---|---|---|---|---|---|
| **FR ID** | **Functional Requirement** | **Dialog ID** | **Object ID** | **Object Name** | **Additional Specifications** |
| | | | 5.2.4 | phaseStatusGroupTable | |
| | | | 5.2.4.1 | phaseStatusGroupNumber | |
| | | | 5.2.4.3 | phaseStatusGroupYellows | |
| 3.5.2.2.3.4 | Monitor Phase Group Greens | H.2.5 | | | |
| | | | 5.2.3 | maxPhaseGroups | |
| | | | 5.2.4 | phaseStatusGroupTable | |
| | | | 5.2.4.1 | phaseStatusGroupNumber | |
| | | | 5.2.4.4 | phaseStatusGroupGreens | |
| 3.5.2.2.3.5 | Monitor Phase Group Don't Walks | H.2.5 | | | |
| | | | 5.2.3 | maxPhaseGroups | |
| | | | 5.2.4 | phaseStatusGroupTable | |
| | | | 5.2.4.1 | phaseStatusGroupNumber | |
| | | | 5.2.4.5 | phaseStatusGroupDontWalks | |
| 3.5.2.2.3.6 | Monitor Phase Group Pedestrian Clearance | H.2.5 | | | |
| | | | 5.2.3 | maxPhaseGroups | |
| | | | 5.2.4 | phaseStatusGroupTable | |
| | | | 5.2.4.1 | phaseStatusGroupNumber | |
| | | | 5.2.4.6 | phaseStatusGroupPedClears | |
| 3.5.2.2.3.7 | Monitor Phase Group Walks | H.2.5 | | | |
| | | | 5.2.3 | maxPhaseGroups | |
| | | | 5.2.4 | phaseStatusGroupTable | |
| | | | 5.2.4.1 | phaseStatusGroupNumber | |
| | | | 5.2.4.7 | phaseStatusGroupWalks | |
| 3.5.2.2.3.8 | Monitor Phase Group Flashing Yellow Arrow | H.2.5 | | | |
| | | | 5.10.3 | maxOverlapStatusGroups | |
| | | | 5.10.4 | overlapStatusGroupTable | |
| | | | 5.10.4.1 | overlapStatusGroupNumber | |

Copy Per RTM Distribution Permission
© 2023 AASHTO / ITE / NEMA

| Requirements Traceability Matrix (RTM) | | | | | |
|---|---|---|---|---|---|
| **FR ID** | **Functional Requirement** | **Dialog ID** | **Object ID** | **Object Name** | **Additional Specifications** |
| | | | 5.10.4.3 | overlapStatusGroupYellows | Note: Whether this object or overlapStatusGroupGreens is used is dependent on where the FYA is wired. |
| | | | 5.10.4.4 | overlapStatusGroupGreens | |
| 3.5.2.2.3.9 | Monitor Phase Group Flashing Red Arrow | H.2.5 | | | |
| | | | 5.10.3 | maxOverlapStatusGroups | |
| | | | 5.10.4 | overlapStatusGroupTable | |
| | | | 5.10.4.1 | overlapStatusGroupNumber | |
| | | | 5.10.4.2 | overlapStatusGroupReds | Note: Whether this object or overlapStatusGroupGreens is used is dependent on where the FRA is wired. |
| | | | 5.10.4.4 | overlapStatusGroupGreens | |
| 3.5.2.2.4 | Monitor Current Phase Requirements | | | | |
| 3.5.2.2.4.1 | Monitor Phase Group Phase Ons | H.2.5 | | | |
| | | | 5.2.3 | maxPhaseGroups | |
| | | | 5.2.4 | phaseStatusGroupTable | |
| | | | 5.2.4.1 | phaseStatusGroupNumber | |
| | | | 5.2.4.10 | phaseStatusGroupPhaseOns | |
| 3.5.2.2.4.2 | Monitor Phase Group Phase Nexts | H.2.5 | | | |
| | | | 5.2.3 | maxPhaseGroups | |
| | | | 5.2.4 | phaseStatusGroupTable | |
| | | | 5.2.4.1 | phaseStatusGroupNumber | |
| | | | 5.2.4.11 | phaseStatusGroupPhaseNexts | |

© 2023 AASHTO / ITE / NEMA Copy Per RTM Distribution Permission

| Requirements Traceability Matrix (RTM) | | | | | |
|---|---|---|---|---|---|
| **FR ID** | **Functional Requirement** | **Dialog ID** | **Object ID** | **Object Name** | **Additional Specifications** |
| 3.5.2.2.4.3 | Monitor Phase Group Vehicle Call | H.2.5 | | | |
| | | | 5.2.3 | maxPhaseGroups | |
| | | | 5.2.4 | phaseStatusGroupTable | |
| | | | 5.2.4.1 | phaseStatusGroupNumber | |
| | | | 5.2.4.8 | phaseStatusGroupVehCalls | |
| 3.5.2.2.4.4 | Monitor Phase Group Pedestrian Call | H.2.5 | | | |
| | | | 5.2.3 | maxPhaseGroups | |
| | | | 5.2.4 | phaseStatusGroupTable | |
| | | | 5.2.4.1 | phaseStatusGroupNumber | |
| | | | 5.2.4.9 | phaseStatusGroupPedCalls | |
| 3.5.2.2.4.5 | Monitor Phase Group Bicycle Call | H.2.5 | | | |
| | | | 5.2.3 | maxPhaseGroups | |
| | | | 5.2.4 | phaseStatusGroupTable | |
| | | | 5.2.4.1 | phaseStatusGroupNumber | |
| | | | 5.2.4.8 | phaseStatusGroupVehCalls | |
| 3.5.2.2.4.6 | Monitor Phase Group Transit Call | H.2.5 | | | |
| | | | 5.2.3 | maxPhaseGroups | |
| | | | 5.2.4 | phaseStatusGroupTable | |
| | | | 5.2.4.1 | phaseStatusGroupNumber | |
| | | | 5.2.4.8 | phaseStatusGroupVehCalls | |
| 3.5.2.2.5 | Retrieve Current Ring Requirements | | | | |
| 3.5.2.2.5.1 | Monitor Ring Status | H.2.5 | | | |
| | | | 5.8.1 | maxRings | |
| | | | 5.8.6 | ringStatusTable | |
| | | | 5.8.6.1 | ringStatus | |
| 3.5.2.2.5.2 | Monitor Ring Termination Cause | | | | |
| | | H.2.5 | 5.8.1 | maxRings | |
| | | | 5.8.6 | ringStatusTable | |

Copy Per RTM Distribution Permission
© 2023 AASHTO / ITE / NEMA

| Requirements Traceability Matrix (RTM) | | | | | |
|---|---|---|---|---|---|
| **FR ID** | **Functional Requirement** | **Dialog ID** | **Object ID** | **Object Name** | **Additional Specifications** |
| | | | 5.8.6.1 | ringStatus | |
| 3.5.2.2.6 | Retrieve Current Channel Status Requirements | | | | |
| 3.5.2.2.6.1 | Determine Maximum Number of Channel Status Groups | G.1 | | | |
| | | | 5.9.3 | maxChannelStatusGroups | |
| 3.5.2.2.6.2 | Monitor Channel Status Group Reds | H.2.5 | | | |
| | | | 5.9.3 | maxChannelStatusGroups | |
| | | | 5.9.4 | channelStatusGroupTable | |
| | | | 5.9.4.1 | channelStatusGroupNumber | |
| | | | 5.9.4.2 | channelStatusGroupReds | |
| 3.5.2.2.6.3 | Monitor Channel Status Group Yellows | H.2.5 | | | |
| | | | 5.9.3 | maxChannelStatusGroups | |
| | | | 5.9.4 | channelStatusGroupTable | |
| | | | 5.9.4.1 | channelStatusGroupNumber | |
| | | | 5.9.4.3 | channelStatusGroupYellows | |
| 3.5.2.2.6.4 | Monitor Channel Status Group Greens | H.2.5 | | | |
| | | | 5.9.3 | maxChannelStatusGroups | |
| | | | 5.9.4 | channelStatusGroupTable | |
| | | | 5.9.4.1 | channelStatusGroupNumber | |
| | | | 5.9.4.4 | channelStatusGroupGreens | |
| 3.5.2.2.7 | Retrieve Current Overlap Status Requirements | | | | |
| 3.5.2.2.7.1 | Determine Maximum Number of Overlap Status Groups | G.1 | | | |
| | | | 5.10.3 | maxOverlapStatusGroups | |
| 3.5.2.2.7.2 | Monitor Overlap Status Group Reds | H.2.5 | | | |
| | | | 5.10.3 | maxOverlapStatusGroups | |
| | | | 5.10.4 | overlapStatusGroupTable | |

© 2023 AASHTO / ITE / NEMA Copy Per RTM Distribution Permission

| Requirements Traceability Matrix (RTM) | | | | | |
|---|---|---|---|---|---|
| **FR ID** | **Functional Requirement** | **Dialog ID** | **Object ID** | **Object Name** | **Additional Specifications** |
| | | | 5.10.4.1 | overlapStatusGroupNumber | |
| | | | 5.10.4.2 | overlapStatusGroupReds | |
| 3.5.2.2.7.3 | Monitor Overlap Status Group Yellows | H.2.5 | | | |
| | | | 5.10.3 | maxOverlapStatusGroups | |
| | | | 5.10.4 | overlapStatusGroupTable | |
| | | | 5.10.4.1 | overlapStatusGroupNumber | |
| | | | 5.10.4.3 | overlapStatusGroupYellows | |
| 3.5.2.2.7.4 | Monitor Overlap Status Group Greens | H.2.5 | | | |
| | | | 5.10.3 | maxOverlapStatusGroups | |
| | | | 5.10.4 | overlapStatusGroupTable | |
| | | | 5.10.4.1 | overlapStatusGroupNumber | |
| | | | 5.10.4.4 | overlapStatusGroupGreens | |
| 3.5.2.2.7.5 | Monitor Overlap Status Group Flashing Yellow Arrows | H.2.5 | | | |
| | | | 5.10.3 | maxOverlapStatusGroups | |
| | | | 5.10.4 | overlapStatusGroupTable | |
| | | | 5.10.4.1 | overlapStatusGroupNumber | |
| | | | 5.10.4.3 | overlapStatusGroupYellows | Note: Whether this object or overlapStatusGroupGreens is used is dependent on where the FYA is wired. |
| | | | 5.10.4.4 | overlapStatusGroupGreens | |
| 3.5.2.2.7.6 | Monitor Overlap Status Group Flashing Red Arrows | H.2.5 | | | |
| | | | 5.10.3 | maxOverlapStatusGroups | |
| | | | 5.10.4 | overlapStatusGroupTable | |
| | | | 5.10.4.1 | overlapStatusGroupNumber | |

Copy Per RTM Distribution Permission
© 2023 AASHTO / ITE / NEMA

| Requirements Traceability Matrix (RTM) | | | | | |
|---|---|---|---|---|---|
| **FR ID** | **Functional Requirement** | **Dialog ID** | **Object ID** | **Object Name** | **Additional Specifications** |
| | | | 5.10.4.2 | overlapStatusGroupReds | Note: Whether this object or overlapStatusGroupGreens is used is dependent on where the FRA is wired. |
| | | | 5.10.4.4 | overlapStatusGroupGreens | |
| 3.5.2.2.8 | Retrieve Current Preempt Status Requirements | | | | |
| 3.5.2.2.8.1 | Monitor Currently Active Preempt | G.1 | | | |
| | | | 5.7.4 | preemptStatus | |
| 3.5.2.2.8.2 | Monitor Current Preempt Inputs | H.2.5 | | | |
| | | | 5.7.5 | maxPreemptGroups | |
| | | | 5.7.6 | preemptStatusGroupTable | |
| | | | 5.7.6.1 | preemptStatusGroupNumber | |
| | | | 5.7.6.2 | preemptStatusGroup | |
| 3.5.2.2.8.3 | Monitor Current Preempt State | H.2.5 | | | |
| | | | 5.7.1 | maxPreempts | |
| | | | 5.7.2 | preemptTable | |
| | | | 5.7.2.1 | preemptNumber | |
| | | | 5.7.2.16 | preemptState | |
| 3.5.2.2.8.4 | Monitor Current Gate Status | H.2.5 | | | |
| | | | 5.7.8 | maxPreemptGates | |
| | | | 5.7.9 | preemptGateTable | |
| | | | 5.7.9.1 | preemptGateNumber | |
| | | | 5.7.9.2 | preemptGateStatus | |
| | | | 5.7.9.3 | preemptGateDescription | |
| 3.5.2.2.9 | Retrieve Special Function Outputs Requirements | | | | |

© 2023 AASHTO / ITE / NEMA Copy Per RTM Distribution Permission

| Requirements Traceability Matrix (RTM) | | | | | |
|---|---|---|---|---|---|
| **FR ID** | **Functional Requirement** | **Dialog ID** | **Object ID** | **Object Name** | **Additional Specifications** |
| 3.5.2.2.9.1 | Determine Maximum Number of Special Functions | G.1 | | | |
| | | | 5.4.13 | maxSpecialFunctionOutputs | |
| 3.5.2.2.9.2 | Monitor Special Function State | | | | DEPRECATED |
| 3.5.2.2.9.3 | Monitor Special Function Status | H.2.5 | | | |
| | | | 5.4.13 | maxSpecialFunctionOutputs | |
| | | | 5.4.14 | specialFunctionOutputTable | |
| | | | 5.4.14.1 | specialFunctionOutputNumber | |
| | | | 5.4.14.4 | specialFunctionOutputStatus | |
| 3.5.2.2.9.4 | Monitor Special Function Control Source | H.2.5 | | | |
| | | | 5.4.13 | maxSpecialFunctionOutputs | |
| | | | 5.4.14 | specialFunctionOutputTable | |
| | | | 5.4.14.1 | specialFunctionOutputNumber | |
| | | | 5.4.14.3 | specialFunctionOutputControl | |
| 3.5.2.2.10 | Monitor Timebase Action Status Requirements | | | | |
| 3.5.2.2.10.1 | Monitor Timebase Action Status | G.1 | | | |
| | | | 5.6.4 | timebaseAscActionStatus | |
| 3.5.2.2.10.2 | Monitor Timebase Timing Pattern Status | G.1 | | | |
| | | | 1201v03 – 2.4.4.5 | timeBaseScheduleTableStatus | |
| 3.5.2.2.11 | Monitor Intra-Cabinet Communications Requirements | | | | |
| 3.5.2.2.11.1 | Monitor TS2 Port 1 Status | H.2.6 | | | |
| | | | 5.11.1 | maxPort1Addresses | |
| | | | 5.11.2 | port1Table | |
| | | | 5.11.2.1 | port1Number | |
| | | | 5.11.2.4 | port1Status | |
| 3.5.2.2.11.2 | Monitor TS2 Port 1 Fault Frame | H.2.6 | | | |

Copy Per RTM Distribution Permission © 2023 AASHTO / ITE / NEMA

| Requirements Traceability Matrix (RTM) | | | | | |
|---|---|---|---|---|---|
| **FR ID** | **Functional Requirement** | **Dialog ID** | **Object ID** | **Object Name** | **Additional Specifications** |
| | | | 5.11.1 | maxPort1Addresses | |
| | | | 5.11.2 | port1Table | |
| | | | 5.11.2.1 | port1Number | |
| | | | 5.11.2.5 | port1FaultFrame | |
| 3.5.2.2.11.3 | Monitor Serial Bus 1 Status | H.2.6 | | | |
| | | | 5.15.1 | maxSIUPort1Addresses | |
| | | | 5.15.2 | siuport1Table | |
| | | | 5.15.2.1 | siuport1Number | |
| | | | 5.15.2.2 | siuport1DevicePresent | |
| | | | 5.15.2.3 | siuport1Status | |
| 3.5.2.3 | Manage Signal Operations Control Requirements | | | | |
| 3.5.2.3.1 | Control ASC Function Requirements | | | | |
| 3.5.2.3.1.1 | Control External Minimum Recall | G.3 | | | |
| | | | 5.4.10 | unitControl | Bit 2 |
| 3.5.2.3.1.2 | Control Call to Non-Actuated 1 | G.3 | | | |
| | | | 5.4.10 | unitControl | Bit 3 |
| 3.5.2.3.1.3 | Control Call to Non-Actuated 2 | G.3 | | | |
| | | | 5.4.10 | unitControl | Bit 4 |
| 3.5.2.3.1.4 | Control Walk Rest Modifier | G.3 | | | |
| | | | 5.4.10 | unitControl | Bit 5 |
| 3.5.2.3.1.5 | Control Interconnect | G.3 | | | |
| | | | 5.4.10 | unitControl | Bit 6 |
| 3.5.2.3.1.6 | Control Dimming Enabled | G.3 | | | |
| | | | 5.4.10 | unitControl | Bit 7 |
| 3.5.2.3.1.7 | Control Disable Remote Commands | G.3 | | | |
| | | | 5.4.10 | unitControl | Bit 1 |
| 3.5.2.3.1.8 | Acknowledge Local Cycle Zero Alarm | G.1 | | | |

© 2023 AASHTO / ITE / NEMA Copy Per RTM Distribution Permission

| Requirements Traceability Matrix (RTM) | | | | | |
|---|---|---|---|---|---|
| **FR ID** | **Functional Requirement** | **Dialog ID** | **Object ID** | **Object Name** | **Additional Specifications** |
| | | | 5.4.9 | shortAlarmStatus | Bit 2 |
| 3.5.2.3.1.9 | Control Weather-Based Signal Operation Changes | G.3 | | | |
| | | | 5.5.14 | systemPatternControl | |
| 3.5.2.3.2 | Command Timing Pattern Requirements | | | | |
| 3.5.2.3.2.1 | Command System Timing Pattern | G.3 | | | |
| | | | 5.5.14 | systemPatternControl | |
| 3.5.2.3.2.2 | Command System Timing Pattern System Reference Point | G.3 | | | |
| | | | 5.5.15 | systemSyncControl | |
| 3.5.2.3.3 | Control Phases Requirements | | | | |
| 3.5.2.3.3.1 | Control Phase Group Phase Omits | H.2.7 | | | |
| | | | 5.2.3 | maxPhaseGroups | |
| | | | 5.2.5 | phaseControlGroupTable | |
| | | | 5.2.5.1 | phaseControlGroupNumber | |
| | | | 5.2.5.2 | phaseControlGroupPhaseOmit | |
| 3.5.2.3.3.2 | Control Phase Group Pedestrian Omits | H.2.7 | | | |
| | | | 5.2.3 | maxPhaseGroups | |
| | | | 5.2.5 | phaseControlGroupTable | |
| | | | 5.2.5.1 | phaseControlGroupNumber | |
| | | | 5.2.5.3 | phaseControlGroupPedOmit | |
| 3.5.2.3.3.3 | Control Phase Group Holds | H.2.7 | | | |
| | | | 5.2.3 | maxPhaseGroups | |
| | | | 5.2.5 | phaseControlGroupTable | |
| | | | 5.2.5.1 | phaseControlGroupNumber | |
| | | | 5.2.5.4 | phaseControlGroupHold | |
| 3.5.2.3.3.4 | Control Phase Group Force Offs | H.2.7 | | | |

Copy Per RTM Distribution Permission
© 2023 AASHTO / ITE / NEMA

| Requirements Traceability Matrix (RTM) | | | | | |
|---|---|---|---|---|---|
| **FR ID** | **Functional Requirement** | **Dialog ID** | **Object ID** | **Object Name** | **Additional Specifications** |
| | | | 5.2.3 | maxPhaseGroups | |
| | | | 5.2.5 | phaseControlGroupTable | |
| | | | 5.2.5.1 | phaseControlGroupNumber | |
| | | | 5.2.5.5 | phaseControlGroupForceOff | |
| 3.5.2.3.3.5 | Control Phase Group Vehicle Calls | H.2.7 | | | |
| | | | 5.2.3 | maxPhaseGroups | |
| | | | 5.2.5 | phaseControlGroupTable | |
| | | | 5.2.5.1 | phaseControlGroupNumber | |
| | | | 5.2.5.6 | phaseControlGroupVehCall | |
| 3.5.2.3.3.6 | Control Phase Group Pedestrian Calls | H.2.7 | | | |
| | | | 5.2.3 | maxPhaseGroups | |
| | | | 5.2.5 | phaseControlGroupTable | |
| | | | 5.2.5.1 | phaseControlGroupNumber | |
| | | | 5.2.5.7 | phaseControlGroupPedCall | |
| 3.5.2.3.3.7 | Control Phase Group Bicycle Calls | H.2.7 | | | |
| | | | 5.2.3 | maxPhaseGroups | |
| | | | 5.2.5 | phaseControlGroupTable | |
| | | | 5.2.5.1 | phaseControlGroupNumber | |
| | | | 5.2.5.6 | phaseControlGroupVehCall | |
| 3.5.2.3.3.8 | Control Phase Group Transit Calls | H.2.7 | | | |
| | | | 5.2.3 | maxPhaseGroups | |
| | | | 5.2.5 | phaseControlGroupTable | |
| | | | 5.2.5.1 | phaseControlGroupNumber | |
| | | | 5.2.5.6 | phaseControlGroupVehCall | |
| 3.5.2.3.4 | Control Preempt Requirements | | | | |
| 3.5.2.3.4.1 | Command Preempt Remote Activation | H.2.7 | | | |
| | | | 5.7.3 | preemptControlTable | |
| | | | 5.7.3.1 | preemptControlNumber | |

© 2023 AASHTO / ITE / NEMA Copy Per RTM Distribution Permission

| Requirements Traceability Matrix (RTM) | | | | | |
|---|---|---|---|---|---|
| **FR ID** | **Functional Requirement** | **Dialog ID** | **Object ID** | **Object Name** | **Additional Specifications** |
| | | | 5.7.3.2 | preemptControlState | |
| 3.5.2.3.5 | Control Ring Requirements | | | | |
| 3.5.2.3.5.1 | Control Ring Stop Time | H.2.7 | | | |
| | | | 5.8.5 | ringControlGroupTable | |
| | | | 5.8.5.1 | ringControlGroupNumber | |
| | | | 5.8.5.2 | ringControlGroupStopTime | |
| 3.5.2.3.5.2 | Control Ring Force Offs | H.2.7 | | | |
| | | | 5.8.5 | ringControlGroupTable | |
| | | | 5.8.5.1 | ringControlGroupNumber | |
| | | | 5.8.5.3 | ringControlGroupForceOff | |
| 3.5.2.3.5.3 | Control Ring Maximum 2 Time Settings | H.2.7 | | | |
| | | | 5.8.5 | ringControlGroupTable | |
| | | | 5.8.5.1 | ringControlGroupNumber | |
| | | | 5.8.5.4 | ringControlGroupMax2 | |
| 3.5.2.3.5.4 | Control Ring Maximum 3 Time Settings | H.2.7 | | | |
| | | | 5.8.5 | ringControlGroupTable | |
| | | | 5.8.5.1 | ringControlGroupNumber | |
| | | | 5.8.5.9 | ringControlGroupMax3 | |
| 3.5.2.3.5.5 | Control Ring Maximum Inhibit Settings | H.2.7 | | | |
| | | | 5.8.5 | ringControlGroupTable | |
| | | | 5.8.5.1 | ringControlGroupNumber | |
| | | | 5.8.5.5 | ringControlGroupMaxInhibit | |
| 3.5.2.3.5.6 | Control Ring Pedestrian Recycle Settings | H.2.7 | | | |
| | | | 5.8.5 | ringControlGroupTable | |
| | | | 5.8.5.1 | ringControlGroupNumber | |
| | | | 5.8.5.6 | ringControlGroupPedRecycle | |
| 3.5.2.3.5.7 | Control Ring Red Rest Settings | H.2.7 | | | |
| | | | 5.8.5 | ringControlGroupTable | |

Copy Per RTM Distribution Permission
© 2023 AASHTO / ITE / NEMA

| Requirements Traceability Matrix (RTM) | | | | | |
|---|---|---|---|---|---|
| **FR ID** | **Functional Requirement** | **Dialog ID** | **Object ID** | **Object Name** | **Additional Specifications** |
| | | | 5.8.5.1 | ringControlGroupNumber | |
| | | | 5.8.5.7 | ringControlGroupRedRest | |
| 3.5.2.3.5.8 | Control Ring Red Clearance Omit Settings | H.2.7 | | | |
| | | | 5.8.5 | ringControlGroupTable | |
| | | | 5.8.5.1 | ringControlGroupNumber | |
| | | | 5.8.5.8 | ringControlGroupOmitRedClear | |
| 3.5.2.3.5.9 | Determine Maximum Number of Ring Control Groups | G.1 | | | |
| | | | 5.8.4 | maxRingControlGroups | |
| 3.5.2.3.6 | Special Functions Control Requirements | | | | |
| 3.5.2.3.6.1 | Activate Special Function | H.2.7 | | | |
| | | | 5.4.14 | specialFunctionOutputTable | |
| | | | 5.4.14.1 | specialFunctionOutputNumber | |
| | | | 5.4.14.3 | specialFunctionOutputControl | |
| 3.5.2.3.6.2 | Release Special Function Control | H.2.7 | | | |
| | | | 5.4.14 | specialFunctionOutputTable | |
| | | | 5.4.14.1 | specialFunctionOutputNumber | |
| | | | 5.4.14.3 | specialFunctionOutputControl | |
| 3.5.2.3.7 | Control Frame 40 Requirements | | | | |
| 3.5.2.3.7.1 | Control TS2 Port 1 Frame 40 Messages | H.2.7 | | | |
| | | | 5.11.1 | maxPort1Addresses | |
| | | | 5.11.2 | port1Table | |
| | | | 5.11.2.1 | port1Number | |
| | | | 5.11.2.3 | port1Frame40Enable | |
| 3.5.2.3.8 | Activate Action Plan | G.3 | | | |
| | | | 5.6.5 | actionPlanControl | |
| 3.5.2.3.9 | Remote Manual Control Requirements | | | | |

© 2023 AASHTO / ITE / NEMA Copy Per RTM Distribution Permission

| Requirements Traceability Matrix (RTM) | | | | | |
|---|---|---|---|---|---|
| **FR ID** | **Functional Requirement** | **Dialog ID** | **Object ID** | **Object Name** | **Additional Specifications** |
| 3.5.2.3.9.1 | Enable Manual Control | G.3 | | | |
| | | | 5.4.15 | unitMCETimeout | |
| 3.5.2.3.9.2 | Remote Manual Control Advance Command | G.3 | | | |
| | | | 5.4.16 | unitMCEIntAdv | |
| 3.5.2.3.9.3 | Configure Manual Control Timeout | G.3 | | | |
| | | | 5.4.15 | unitMCETimeout | |
| 3.5.3 | Detector Management Requirements | | | | |
| 3.5.3.1 | Manage Detector Configuration Requirements | | | | |
| 3.5.3.1.1 | Configure Detectors Requirements | | | | |
| 3.5.3.1.1.1 | Configure Vehicle Detectors Requirements | | | | |
| 3.5.3.1.1.1.1 | Configure Vehicle Volume Detectors | H.2.7 | | | |
| | | | 5.3.2 | vehicleDetectorTable | |
| | | | 5.3.2.1 | vehicleDetectorNumber | |
| | | | 5.3.2.2 | vehicleDetectorOptions | Bit 0 |
| 3.5.3.1.1.1.2 | Configure Vehicle Occupancy Detectors | H.2.7 | | | |
| | | | 5.3.2 | vehicleDetectorTable | |
| | | | 5.3.2.1 | vehicleDetectorNumber | |
| | | | 5.3.2.2 | vehicleDetectorOptions | Bit 1 |
| 3.5.3.1.1.1.3 | Configure Vehicle Speed Detectors | H.2.7 | | | |
| | | | 5.3.2 | vehicleDetectorTable | |
| | | | 5.3.2.1 | vehicleDetectorNumber | |
| | | | 5.3.2.15 | vehicleDetectorOptions2 | Bit 0 |
| 3.5.3.1.1.1.4 | Configure Vehicle Detection Zone Length | H.2.7 | | | |
| | | | 5.3.2 | vehicleDetectorTable | |
| | | | 5.3.2.1 | vehicleDetectorNumber | |
| | | | 5.3.2.19 | vehicleDetectorLength | |
| 3.5.3.1.1.1.5 | Configure Vehicle Travel Mode | H.2.7 | | | |

Copy Per RTM Distribution Permission
© 2023 AASHTO / ITE / NEMA

| Requirements Traceability Matrix (RTM) | | | | | |
|---|---|---|---|---|---|
| **FR ID** | **Functional Requirement** | **Dialog ID** | **Object ID** | **Object Name** | **Additional Specifications** |
| | | | 5.3.2 | vehicleDetectorTable | |
| | | | 5.3.2.1 | vehicleDetectorNumber | |
| | | | 5.3.2.20 | vehicleDetectorTravelMode | |
| 3.5.3.1.1.1.6 | Configure Vehicle Detector Yellow Lock Call Enabled | H.2.7 | | | |
| | | | 5.3.2 | vehicleDetectorTable | |
| | | | 5.3.2.1 | vehicleDetectorNumber | |
| | | | 5.3.2.2 | vehicleDetectorOptions | Bit 2 |
| 3.5.3.1.1.1.7 | Configure Vehicle Detector Red Lock Call Enabled | H.2.7 | | | |
| | | | 5.3.2 | vehicleDetectorTable | |
| | | | 5.3.2.1 | vehicleDetectorNumber | |
| | | | 5.3.2.2 | vehicleDetectorOptions | Bit 3 |
| 3.5.3.1.1.1.8 | Configure Vehicle Detector Passage Enabled | H.2.7 | | | |
| | | | 5.3.2 | vehicleDetectorTable | |
| | | | 5.3.2.1 | vehicleDetectorNumber | |
| | | | 5.3.2.2 | vehicleDetectorOptions | Bit 4 |
| 3.5.3.1.1.1.9 | Configure Vehicle Detector Added Initial Time Enabled | H.2.7 | | | |
| | | | 5.3.2 | vehicleDetectorTable | |
| | | | 5.3.2.1 | vehicleDetectorNumber | |
| | | | 5.3.2.2 | vehicleDetectorOptions | Bit 5 |
| 3.5.3.1.1.1.10 | Configure Vehicle Detector Queue Enabled | H.2.7 | | | |
| | | | 5.3.2 | vehicleDetectorTable | |
| | | | 5.3.2.1 | vehicleDetectorNumber | |
| | | | 5.3.2.2 | vehicleDetectorOptions | Bit 6 |
| 3.5.3.1.1.1.11 | Configure Vehicle Detector Call Enabled | H.2.7 | | | |
| | | | 5.3.2 | vehicleDetectorTable | |

© 2023 AASHTO / ITE / NEMA Copy Per RTM Distribution Permission

| Requirements Traceability Matrix (RTM) | | | | | |
|---|---|---|---|---|---|
| **FR ID** | **Functional Requirement** | **Dialog ID** | **Object ID** | **Object Name** | **Additional Specifications** |
| | | | 5.3.2.1 | vehicleDetectorNumber | |
| | | | 5.3.2.2 | vehicleDetectorOptions | Bit 7 |
| 3.5.3.1.1.1.12 | Configure Vehicle Detector Call Phase | H.2.7 | | | |
| | | | 5.3.2 | vehicleDetectorTable | |
| | | | 5.3.2.1 | vehicleDetectorNumber | |
| | | | 5.3.2.3 | vehicleDetectorCallPhase | |
| 3.5.3.1.1.1.13 | Configure Vehicle Detector Switch Phase | H.2.7 | | | |
| | | | 5.3.2 | vehicleDetectorTable | |
| | | | 5.3.2.1 | vehicleDetectorNumber | |
| | | | 5.3.2.4 | vehicleDetectorSwitchPhase | |
| 3.5.3.1.1.1.14 | Configure Vehicle Detector Delay Time | H.2.7 | | | |
| | | | 5.3.2 | vehicleDetectorTable | |
| | | | 5.3.2.1 | vehicleDetectorNumber | |
| | | | 5.3.2.5 | vehicleDetectorDelay | |
| 3.5.3.1.1.1.15 | Configure Vehicle Detector Extend Time | H.2.7 | | | |
| | | | 5.3.2 | vehicleDetectorTable | |
| | | | 5.3.2.1 | vehicleDetectorNumber | |
| | | | 5.3.2.6 | vehicleDetectorExtend | |
| 3.5.3.1.1.1.16 | Configure Vehicle Detector Queue Limit Time | H.2.7 | | | |
| | | | 5.3.2 | vehicleDetectorTable | |
| | | | 5.3.2.1 | vehicleDetectorNumber | |
| | | | 5.3.2.7 | vehicleDetectorQueueLimit | |
| 3.5.3.1.1.1.17 | Configure Vehicle Detector No Activity Time | H.2.7 | | | |
| | | | 5.3.2 | vehicleDetectorTable | |
| | | | 5.3.2.1 | vehicleDetectorNumber | |
| | | | 5.3.2.8 | vehicleDetectorNoActivity | |
| 3.5.3.1.1.1.18 | Configure Vehicle Detector Maximum Presence Time | H.2.7 | | | |

Copy Per RTM Distribution Permission © 2023 AASHTO / ITE / NEMA

| Requirements Traceability Matrix (RTM) | | | | | |
|---|---|---|---|---|---|
| **FR ID** | **Functional Requirement** | **Dialog ID** | **Object ID** | **Object Name** | **Additional Specifications** |
| | | | 5.3.2 | vehicleDetectorTable | |
| | | | 5.3.2.1 | vehicleDetectorNumber | |
| | | | 5.3.2.9 | vehicleDetectorMaxPresence | |
| 3.5.3.1.1.1.19 | Configure Vehicle Detector Erratic Counts | H.2.7 | | | |
| | | | 5.3.2 | vehicleDetectorTable | |
| | | | 5.3.2.1 | vehicleDetectorNumber | |
| | | | 5.3.2.10 | vehicleDetectorErraticCounts | |
| 3.5.3.1.1.1.20 | Configure Vehicle Detector Fail Time | H.2.7 | | | |
| | | | 5.3.2 | vehicleDetectorTable | |
| | | | 5.3.2.1 | vehicleDetectorNumber | |
| | | | 5.3.2.11 | vehicleDetectorFailTime | |
| 3.5.3.1.1.1.21 | Configure Single Detector Speed Mode | H.2.7 | | | |
| | | | 5.3.2 | vehicleDetectorTable | |
| | | | 5.3.2.1 | vehicleDetectorNumber | |
| | | | 5.3.2.15 | vehicleDetectorOptions2 | Bit 2 |
| 3.5.3.1.1.1.22 | Configure Paired Detector | H.2.7 | | | |
| | | | 5.3.2 | vehicleDetectorTable | |
| | | | 5.3.2.1 | vehicleDetectorNumber | |
| | | | 5.3.2.16 | vehicleDetectorPairedDetector | |
| 3.5.3.1.1.1.23 | Configure Paired Detector Placement | H.2.7 | | | |
| | | | 5.3.2 | vehicleDetectorTable | |
| | | | 5.3.2.1 | vehicleDetectorNumber | |
| | | | 5.3.2.15 | vehicleDetectorOptions2 | Bit 1 |
| 3.5.3.1.1.1.24 | Configure Paired Detector Spacing | H.2.7 | | | |
| | | | 5.3.2 | vehicleDetectorTable | |
| | | | 5.3.2.1 | vehicleDetectorNumber | |

© 2023 AASHTO / ITE / NEMA Copy Per RTM Distribution Permission

| Requirements Traceability Matrix (RTM) | | | | | |
|---|---|---|---|---|---|
| **FR ID** | **Functional Requirement** | **Dialog ID** | **Object ID** | **Object Name** | **Additional Specifications** |
| | | | 5.3.2.17 | vehicleDetectorPairedDetectorSpacing | |
| 3.5.3.1.1.1.25 | Configure Average Vehicle Length | H.2.7 | | | |
| | | | 5.3.2 | vehicleDetectorTable | |
| | | | 5.3.2.1 | vehicleDetectorNumber | |
| | | | 5.3.2.18 | vehicleDetectorAvgVehicleLength | |
| 3.5.3.1.1.2 | Configure Pedestrian Detectors Requirements | | | | |
| 3.5.3.1.1.2.1 | Configure Pedestrian Detector Call Phase | H.2.7 | | | |
| | | | 5.3.7 | pedestrianDetectorTable | |
| | | | 5.3.7.1 | pedestrianDetectorNumber | |
| | | | 5.3.7.2 | pedestrianDetectorCallPhase | |
| 3.5.3.1.1.2.2 | Configure Pedestrian Detector No Activity Time | H.2.7 | | | |
| | | | 5.3.7 | pedestrianDetectorTable | |
| | | | 5.3.7.1 | pedestrianDetectorNumber | |
| | | | 5.3.7.3 | pedestrianDetectorNoActivity | |
| 3.5.3.1.1.2.3 | Configure Pedestrian Detector Maximum Presence Time | H.2.7 | | | |
| | | | 5.3.7 | pedestrianDetectorTable | |
| | | | 5.3.7.1 | pedestrianDetectorNumber | |
| | | | 5.3.7.4 | pedestrianDetectorMaxPresence | |
| 3.5.3.1.1.2.4 | Configure Pedestrian Detector Erratic Counts | H.2.7 | | | |
| | | | 5.3.7 | pedestrianDetectorTable | |
| | | | 5.3.7.1 | pedestrianDetectorNumber | |
| | | | 5.3.7.5 | pedestrianDetectorErraticCounts | |

Copy Per RTM Distribution Permission
© 2023 AASHTO / ITE / NEMA

| Requirements Traceability Matrix (RTM) | | | | | |
|---|---|---|---|---|---|
| **FR ID** | **Functional Requirement** | **Dialog ID** | **Object ID** | **Object Name** | **Additional Specifications** |
| 3.5.3.1.1.2.5 | Configure Pedestrian Detector Non-Lock Calls | H.2.7 | | | |
| | | | 5.3.7 | pedestrianDetectorTable | |
| | | | 5.3.7.1 | pedestrianDetectorNumber | |
| | | | 5.3.7.9 | pedestrianDetectorOptions | |
| 3.5.3.1.1.2.6 | Configure Pedestrian Detector Alternate Pedestrian Timing | H.2.7 | | | |
| | | | 5.3.7 | pedestrianDetectorTable | |
| | | | 5.3.7.1 | pedestrianDetectorNumber | |
| | | | 5.3.7.9 | pedestrianDetectorOptions | |
| 3.5.3.1.1.2.7 | Configure Pedestrian Detector Type | H.2.7 | | | |
| | | | 5.3.7 | pedestrianDetectorTable | |
| | | | 5.3.7.1 | pedestrianDetectorNumber | |
| | | | 5.3.7.9 | pedestrianDetectorOptions | |
| 3.5.3.1.2 | Retrieve Detector Configuration Requirements | | | | |
| 3.5.3.1.2.1 | Retrieve Vehicle Detectors Requirements | | | | |
| 3.5.3.1.2.1.1 | Determine Maximum Number of Vehicle Detectors | G.1 | | | |
| | | | 5.3.1 | maxVehicleDetectors | |
| 3.5.3.1.2.2 | Retrieve Pedestrian Detectors Requirements | | | | |
| 3.5.3.1.2.2.1 | Determine Maximum Number of Pedestrian Detectors | G.1 | | | |
| | | | 5.3.6 | maxPedestrianDetectors | |
| 3.5.3.2 | Retrieve Detector Status Requirements | | | | |
| 3.5.3.2.1 | Monitor Vehicle Detector Status Groups Requirements | | | | |
| 3.5.3.2.1.1 | Determine Maximum Number of Vehicle Detector Status Groups | G.1 | | | |

© 2023 AASHTO / ITE / NEMA Copy Per RTM Distribution Permission

| Requirements Traceability Matrix (RTM) | | | | | |
|---|---|---|---|---|---|
| **FR ID** | **Functional Requirement** | **Dialog ID** | **Object ID** | **Object Name** | **Additional Specifications** |
| | | | 5.3.3 | maxVehicleDetectorStatusGroups | |
| 3.5.3.2.1.2 | Monitor Vehicle Detector Status Group Active | H.2.5 | | | |
| | | | 5.3.3 | maxVehicleDetectorStatusGroups | |
| | | | 5.3.4 | vehicleDetectorStatusGroupTable | |
| | | | 5.3.4.1 | vehicleDetectorStatusGroupNumber | |
| | | | 5.3.4.2 | vehicleDetectorStatusGroupActive | |
| | | | 5.3.2.12 | vehicleDetectorAlarms | |
| 3.5.3.2.1.3 | Monitor Vehicle Detector Status Group Alarm Status | H.2.5 | | | |
| | | | 5.3.3 | maxVehicleDetectorStatusGroups | |
| | | | 5.3.4 | vehicleDetectorStatusGroupTable | |
| | | | 5.3.4.1 | vehicleDetectorStatusGroupNumber | |
| | | | 5.3.4.3 | vehicleDetectorStatusGroupAlarms | |
| | | | 5.3.2.12 | vehicleDetectorAlarms | |
| 3.5.3.2.2 | Monitor Pedestrian Detector Status Requirements | | | | |
| 3.5.3.2.2.1 | Determine Maximum Number of Pedestrian Detector Status Groups | G.1 | | | |
| | | | 5.3.8 | maxPedestrianDetectorGroups | |
| 3.5.3.2.2.2 | Monitor Pedestrian Detector Status Active | H.2.5 | | | |

Copy Per RTM Distribution Permission
© 2023 AASHTO / ITE / NEMA

| Requirements Traceability Matrix (RTM) | | | | | |
|---|---|---|---|---|---|
| **FR ID** | **Functional Requirement** | **Dialog ID** | **Object ID** | **Object Name** | **Additional Specifications** |
| | | | 5.3.8 | maxPedestrianDetectorGroups | |
| | | | 5.3.9 | pedestrianDetectorStatusGroupTable | |
| | | | 5.3.9.1 | pedestrianDetectorStatusGroupNumber | |
| | | | 5.3.9.2 | pedestrianDetectorStatusGroupActive | |
| 3.5.3.2.2.3 | Monitor Pedestrian Detector Alarm Status | H.2.5 | | | |
| | | | 5.3.8 | maxPedestrianDetectorGroups | |
| | | | 5.3.9 | pedestrianDetectorStatusGroupTable | |
| | | | 5.3.9.1 | pedestrianDetectorStatusGroupNumber | |
| | | | 5.3.9.3 | pedestrianDetectorStatusGroupAlarms | |
| 3.5.3.3 | Retrieve Detector Health Requirements | | | | |
| 3.5.3.3.1 | Retrieve Vehicle Detector Health Requirements | | | | |
| 3.5.3.3.1.1 | Monitor Vehicle Detector No Activity Fault | H.2.5 | | | |
| | | | 5.3.1 | maxVehicleDetectors | |
| | | | 5.3.2 | vehicleDetectorTable | |
| | | | 5.3.2.1 | vehicleDetectorNumber | |
| | | | 5.3.2.12 | vehicleDetectorAlarms | Bit 0 |
| | | | 5.3.4 | vehicleDetectorStatusGroupTable | |
| | | | 5.3.4.1 | vehicleDetectorStatusGroupNumber | |

© 2023 AASHTO / ITE / NEMA Copy Per RTM Distribution Permission

| Requirements Traceability Matrix (RTM) | | | | | |
|---|---|---|---|---|---|
| **FR ID** | **Functional Requirement** | **Dialog ID** | **Object ID** | **Object Name** | **Additional Specifications** |
| | | | 5.3.4.3 | vehicleDetectorStatusGroupAlarms | |
| 3.5.3.3.1.2 | Monitor Vehicle Detector Max Presence Fault | H.2.5 | | | |
| | | | 5.3.1 | maxVehicleDetectors | |
| | | | 5.3.2 | vehicleDetectorTable | |
| | | | 5.3.2.1 | vehicleDetectorNumber | |
| | | | 5.3.2.12 | vehicleDetectorAlarms | Bit 1 |
| | | | 5.3.4 | vehicleDetectorStatusGroupTable | |
| | | | 5.3.4.1 | vehicleDetectorStatusGroupNumber | |
| | | | 5.3.4.3 | vehicleDetectorStatusGroupAlarms | |
| 3.5.3.3.1.3 | Monitor Vehicle Detector Erratic Output Fault | H.2.5 | | | |
| | | | 5.3.1 | maxVehicleDetectors | |
| | | | 5.3.2 | vehicleDetectorTable | |
| | | | 5.3.2.1 | vehicleDetectorNumber | |
| | | | 5.3.2.12 | vehicleDetectorAlarms | Bit 2 |
| | | | 5.3.4 | vehicleDetectorStatusGroupTable | |
| | | | 5.3.4.1 | vehicleDetectorStatusGroupNumber | |
| | | | 5.3.4.3 | vehicleDetectorStatusGroupAlarms | |
| 3.5.3.3.1.4 | Monitor Vehicle Detector Communications Fault | H.2.5 | | | |
| | | | 5.3.1 | maxVehicleDetectors | |
| | | | 5.3.2 | vehicleDetectorTable | |
| | | | 5.3.2.1 | vehicleDetectorNumber | |

Copy Per RTM Distribution Permission © 2023 AASHTO / ITE / NEMA

| Requirements Traceability Matrix (RTM) | | | | | |
|---|---|---|---|---|---|
| **FR ID** | **Functional Requirement** | **Dialog ID** | **Object ID** | **Object Name** | **Additional Specifications** |
| | | | 5.3.2.12 | vehicleDetectorAlarms | Bit 3 |
| | | | 5.3.4 | vehicleDetectorStatusGroupTable | |
| | | | 5.3.4.1 | vehicleDetectorStatusGroupNumber | |
| | | | 5.3.4.3 | vehicleDetectorStatusGroupAlarms | |
| 3.5.3.3.1.5 | Monitor Vehicle Detector Configuration Fault | H.2.5 | | | |
| | | | 5.3.1 | maxVehicleDetectors | |
| | | | 5.3.2 | vehicleDetectorTable | |
| | | | 5.3.2.1 | vehicleDetectorNumber | |
| | | | 5.3.2.12 | vehicleDetectorAlarms | Bit 4 |
| | | | 5.3.4 | vehicleDetectorStatusGroupTable | |
| | | | 5.3.4.1 | vehicleDetectorStatusGroupNumber | |
| | | | 5.3.4.3 | vehicleDetectorStatusGroupAlarms | |
| 3.5.3.3.2 | Retrieve Vehicle Loop Detector Requirements | | | | |
| 3.5.3.3.2.1 | Monitor Loop Vehicle Detector Watchdog Failure | H.2.5 | | | |
| | | | 5.3.1 | maxVehicleDetectors | |
| | | | 5.3.2 | vehicleDetectorTable | |
| | | | 5.3.2.1 | vehicleDetectorNumber | |
| | | | 5.3.2.13 | vehicleDetectorReportedAlarms | Bit 1 |
| | | | 5.3.4 | vehicleDetectorStatusGroupTable | |

© 2023 AASHTO / ITE / NEMA Copy Per RTM Distribution Permission

| Requirements Traceability Matrix (RTM) | | | | | |
|---|---|---|---|---|---|
| **FR ID** | **Functional Requirement** | **Dialog ID** | **Object ID** | **Object Name** | **Additional Specifications** |
| | | | 5.3.4.1 | vehicleDetectorStatusGroupNumber | |
| | | | 5.3.4.3 | vehicleDetectorStatusGroupAlarms | |
| 3.5.3.3.2.2 | Monitor Loop Vehicle Detector Open Loop Failure | H.2.5 | | | |
| | | | 5.3.1 | maxVehicleDetectors | |
| | | | 5.3.2 | vehicleDetectorTable | |
| | | | 5.3.2.1 | vehicleDetectorNumber | |
| | | | 5.3.2.13 | vehicleDetectorReportedAlarms | Bit 2 |
| | | | 5.3.4 | vehicleDetectorStatusGroupTable | |
| | | | 5.3.4.1 | vehicleDetectorStatusGroupNumber | |
| | | | 5.3.4.3 | vehicleDetectorStatusGroupAlarms | |
| 3.5.3.3.2.3 | Monitor Loop Vehicle Detector Shorted Loop Fault | H.2.5 | | | |
| | | | 5.3.1 | maxVehicleDetectors | |
| | | | 5.3.2 | vehicleDetectorTable | |
| | | | 5.3.2.1 | vehicleDetectorNumber | |
| | | | 5.3.2.13 | vehicleDetectorReportedAlarms | Bit 3 |
| | | | 5.3.4 | vehicleDetectorStatusGroupTable | |
| | | | 5.3.4.1 | vehicleDetectorStatusGroupNumber | |
| | | | 5.3.4.3 | vehicleDetectorStatusGroupAlarms | |

Copy Per RTM Distribution Permission © 2023 AASHTO / ITE / NEMA

| Requirements Traceability Matrix (RTM) | | | | | |
|---|---|---|---|---|---|
| **FR ID** | **Functional Requirement** | **Dialog ID** | **Object ID** | **Object Name** | **Additional Specifications** |
| 3.5.3.3.2.4 | Monitor Loop Vehicle Detector Excessive Change Fault | H.2.5 | | | |
| | | | 5.3.1 | maxVehicleDetectors | |
| | | | 5.3.2 | vehicleDetectorTable | |
| | | | 5.3.2.1 | vehicleDetectorNumber | |
| | | | 5.3.2.13 | vehicleDetectorReportedAlarms | Bit 4 |
| | | | 5.3.4 | vehicleDetectorStatusGroupTable | |
| | | | 5.3.4.1 | vehicleDetectorStatusGroupNumber | |
| | | | 5.3.4.3 | vehicleDetectorStatusGroupAlarms | |
| 3.5.3.3.3 | Retrieve Pedestrian Detector Health Requirements | | | | |
| 3.5.3.3.3.1 | Monitor Pedestrian Detector No Activity Fault | H.2.5 | | | |
| | | | 5.3.6 | maxPedestrianDetectors | |
| | | | 5.3.7 | pedestrianDetectorTable | |
| | | | 5.3.7.1 | pedestrianDetectorNumber | |
| | | | 5.3.7.6 | pedestrianDetectorAlarms | Bit 0 |
| | | | 5.3.9 | pedestrianDetectorStatusGroupTable | |
| | | | 5.3.9.1 | pedestrianDetectorStatusGroupNumber | |
| | | | 5.3.9.3 | pedestrianDetectorStatusGroupAlarms | |
| 3.5.3.3.3.2 | Monitor Pedestrian Detector Max Presence Fault | H.2.5 | | | |
| | | | 5.3.6 | maxPedestrianDetectors | |
| | | | 5.3.7 | pedestrianDetectorTable | |

© 2023 AASHTO / ITE / NEMA Copy Per RTM Distribution Permission

| Requirements Traceability Matrix (RTM) | | | | | |
|---|---|---|---|---|---|
| **FR ID** | **Functional Requirement** | **Dialog ID** | **Object ID** | **Object Name** | **Additional Specifications** |
| | | | 5.3.7.1 | pedestrianDetectorNumber | |
| | | | 5.3.7.6 | pedestrianDetectorAlarms | Bit 1 |
| | | | 5.3.9 | pedestrianDetectorStatusGroupTable | |
| | | | 5.3.9.1 | pedestrianDetectorStatusGroupNumber | |
| | | | 5.3.9.3 | pedestrianDetectorStatusGroupAlarms | |
| 3.5.3.3.3.3 | Monitor Pedestrian Detector Erratic Output Fault | H.2.5 | | | |
| | | | 5.3.6 | maxPedestrianDetectors | |
| | | | 5.3.7 | pedestrianDetectorTable | |
| | | | 5.3.7.1 | pedestrianDetectorNumber | |
| | | | 5.3.7.6 | pedestrianDetectorAlarms | Bit 2 |
| | | | 5.3.9 | pedestrianDetectorStatusGroupTable | |
| | | | 5.3.9.1 | pedestrianDetectorStatusGroupNumber | |
| | | | 5.3.9.3 | pedestrianDetectorStatusGroupAlarms | |
| 3.5.3.3.3.4 | Monitor Pedestrian Detector Communications Fault | H.2.5 | | | |
| | | | 5.3.6 | maxPedestrianDetectors | |
| | | | 5.3.7 | pedestrianDetectorTable | |
| | | | 5.3.7.1 | pedestrianDetectorNumber | |
| | | | 5.3.7.6 | pedestrianDetectorAlarms | Bit 3 |
| | | | 5.3.9 | pedestrianDetectorStatusGroupTable | |
| | | | 5.3.9.1 | pedestrianDetectorStatusGroupNumber | |

Copy Per RTM Distribution Permission
© 2023 AASHTO / ITE / NEMA

| Requirements Traceability Matrix (RTM) | | | | | |
|---|---|---|---|---|---|
| **FR ID** | **Functional Requirement** | **Dialog ID** | **Object ID** | **Object Name** | **Additional Specifications** |
| | | | 5.3.9.3 | pedestrianDetectorStatusGroupAlarms | |
| 3.5.3.3.3.5 | Monitor Pedestrian Detector Configuration Fault | H.2.5 | | | |
| | | | 5.3.6 | maxPedestrianDetectors | |
| | | | 5.3.7 | pedestrianDetectorTable | |
| | | | 5.3.7.1 | pedestrianDetectorNumber | |
| | | | 5.3.7.6 | pedestrianDetectorAlarms | Bit 4 |
| | | | 5.3.9 | pedestrianDetectorStatusGroupTable | |
| | | | 5.3.9.1 | pedestrianDetectorStatusGroupNumber | |
| | | | 5.3.9.3 | pedestrianDetectorStatusGroupAlarms | |
| 3.5.3.4 | Control Detector Requirements | | | | |
| 3.5.3.4.1 | Control Vehicle Detector Reset | H.2.7 | | | |
| | | | 5.3.1 | maxVehicleDetectors | |
| | | | 5.3.2 | vehicleDetectorTable | |
| | | | 5.3.2.1 | vehicleDetectorNumber | |
| | | | 5.3.2.14 | vehicleDetectorReset | |
| 3.5.3.4.2 | Control Pedestrian Detector Reset | H.2.7 | | | |
| | | | 5.3.6 | maxPedestrianDetectors | |
| | | | 5.3.7 | pedestrianDetectorTable | |
| | | | 5.3.7.1 | pedestrianDetectorNumber | |
| | | | 5.3.7.7 | pedestrianDetectorReset | |
| 3.5.3.4.3 | Control Vehicle Detector Actuation | H.2.7 | | | |
| | | | 5.3.11 | maxVehicleDetectorControlGroups | |

© 2023 AASHTO / ITE / NEMA Copy Per RTM Distribution Permission

| Requirements Traceability Matrix (RTM) | | | | | |
|---|---|---|---|---|---|
| **FR ID** | **Functional Requirement** | **Dialog ID** | **Object ID** | **Object Name** | **Additional Specifications** |
| | | | 5.3.11.1 | vehicleDetectorControlGroupTable | |
| | | | 5.3.11.2 | vehicleDetectorControlGroupNumber | |
| | | | 5.3.11.3 | vehicleDetectorControlGroupActuation | |
| 3.5.3.4.4 | Control Pedestrian Detector Actuation | H.2.7 | | | |
| | | | 5.3.8 | maxPedestrianDetectorGroups | |
| | | | 5.3.12 | pedestrianDetectorControlGroupTable | |
| | | | 5.3.12.1 | pedestrianDetectorControlGroupNumber | |
| | | | 5.3.12.2 | pedestrianDetectorControlGroupActuation | |
| 3.5.3.5 | Manage Vehicle Detector Data Collection Requirements | | | | |
| 3.5.3.5.1 | Configure Vehicle Detector Data Collection Requirements | | | | |
| 3.5.3.5.1.1 | Configure Detector Data Collection Sample Period Requirements | | | | |
| 3.5.3.5.1.1.1 | Configure Detector Data Sample Period | G.3 | | | |
| | | | 5.3.5.2 | volumeOccupancyPeriod | |
| 3.5.3.5.1.1.2 | Configure Detector Data Sample Period—Version 3 | G.3 | | | |
| | | | 5.3.5.5 | volumeOccupancyPeriodV3 | |
| 3.5.3.5.2 | Retrieve Vehicle Detector Data Collection Requirements | | | | |
| 3.5.3.5.2.1 | Retrieve Detector Data Collection Sample Period Requirements | | | | |
| 3.5.3.5.2.1.1 | Monitor Detector Data Sequence | G.1 | | | |

Copy Per RTM Distribution Permission
© 2023 AASHTO / ITE / NEMA

| Requirements Traceability Matrix (RTM) | | | | | |
|---|---|---|---|---|---|
| **FR ID** | **Functional Requirement** | **Dialog ID** | **Object ID** | **Object Name** | **Additional Specifications** |
| | | | 5.3.5.1 | volumeOccupancySequence | |
| 3.5.3.5.2.1.2 | Determine Detector Data Active Detectors | G.1 | | | |
| | | | 5.3.5.3 | activeVolumeOccupancyDetectors | Note: Definition slightly changed. |
| 3.5.3.5.2.1.3 | Monitor Volume Data | H.2.5 | | | |
| | | | 5.3.2.1 | vehicleDetectorNumber | |
| | | | 5.3.5.4 | volumeOccupancyTable | |
| | | | 5.3.5.4.1 | detectorVolume | |
| 3.5.3.5.2.1.4 | Monitor Average Speed | H.2.5 | | | |
| | | | 5.3.2.1 | vehicleDetectorNumber | |
| | | | 5.3.5.3 | activeVolumeOccupancyDetectors | |
| | | | 5.3.5.4 | volumeOccupancyTable | |
| | | | 5.3.5.4.3 | detectorAvgSpeed | |
| 3.5.3.5.2.1.5 | Monitor Occupancy Data | H.2.5 | | | |
| | | | 5.3.2.1 | vehicleDetectorNumber | |
| | | | 5.3.5.3 | activeVolumeOccupancyDetectors | |
| | | | 5.3.5.4 | volumeOccupancyTable | |
| | | | 5.3.5.4.2 | detectorOccupancy | |
| 3.5.3.5.2.1.6 | Monitor Vehicle Detector Data Alarms | H.2.5 | | | |
| | | | 5.3.2.1 | vehicleDetectorNumber | |
| | | | 5.3.5.3 | activeVolumeOccupancyDetectors | |
| | | | 5.3.5.4 | volumeOccupancyTable | |
| | | | 5.3.5.4.2 | detectorOccupancy | |
| 3.5.3.5.2.1.7 | Monitor Detector Data Sample Time | G.1 | | | |
| | | | 5.3.5.6 | detectorSampleTime | |
| 3.5.3.5.2.1.8 | Monitor Detector Data Sample Duration | G.1 | | | |

© 2023 AASHTO / ITE / NEMA Copy Per RTM Distribution Permission

| Requirements Traceability Matrix (RTM) | | | | | |
|---|---|---|---|---|---|
| **FR ID** | **Functional Requirement** | **Dialog ID** | **Object ID** | **Object Name** | **Additional Specifications** |
| | | | 5.3.5.7 | detectorSampleDuration | |
| 3.5.3.6 | Manage Pedestrian Detector Data Collection Requirements | | | | |
| 3.5.3.6.1 | Configure Pedestrian Detector Data Collection Requirements | | | | |
| 3.5.3.6.1.1 | Configure Pedestrian Data Collection Sample Period | G.3 | | | |
| | | | 5.3.10.2 | pedestrianDetectorPeriod | |
| 3.5.3.6.2 | Retrieve Pedestrian Detector Data Collection Requirements | | | | |
| 3.5.3.6.2.1 | Monitor Pedestrian Counts | H.2.5 | | | |
| | | | 5.3.7.1 | pedestrianDetectorNumber | |
| | | | 5.3.10.4 | pedestrianSampleTable | |
| | | | 5.3.10.4.1 | pedestrianDetectorVolume | |
| 3.5.3.6.2.2 | Monitor Pedestrian Detector Actuations | H.2.5 | | | |
| | | | 5.3.7.1 | pedestrianDetectorNumber | |
| | | | 5.3.10.4 | pedestrianSampleTable | |
| | | | 5.3.10.4.2 | pedestrianDetectorActuations | |
| 3.5.3.6.2.3 | Monitor Pedestrian Detector Data Alarms | H.2.5 | | | |
| | | | 5.3.7.1 | pedestrianDetectorNumber | |
| | | | 5.3.10.4 | pedestrianSampleTable | |
| | | | 5.3.10.4.2 | pedestrianDetectorActuations | |
| 3.5.3.6.2.4 | Monitor Pedestrian Services | H.2.5 | | | |
| | | | 5.3.7.1 | pedestrianDetectorNumber | |
| | | | 5.3.10.4 | pedestrianSampleTable | |
| | | | 5.3.10.4.3 | pedestrianDetectorServices | |
| 3.5.3.6.2.5 | Determine Pedestrian Detector Data Active Detectors | G.1 | | | |
| | | | 5.3.10.3 | activePedestrianDetectors | |

Copy Per RTM Distribution Permission
© 2023 AASHTO / ITE / NEMA

| Requirements Traceability Matrix (RTM) | | | | | |
|---|---|---|---|---|---|
| **FR ID** | **Functional Requirement** | **Dialog ID** | **Object ID** | **Object Name** | **Additional Specifications** |
| 3.5.3.6.2.6 | Monitor Pedestrian Detector Data Sample Time | G.1 | | | |
| | | | 5.3.10.5 | pedestrianDetectorSampleTime | |
| 3.5.3.6.2.7 | Monitor Pedestrian Detector Data Sample Duration | G.1 | | | |
| | | | 5.3.10.6 | pedestrianDetectorSampleDuration | |
| 3.5.3.6.2.8 | Monitor Pedestrian Detector Data Sequence | G.1 | | | |
| | | | 5.3.10.1 | pedestrianDetectorSequence | |
| 3.5.4 | Connected Vehicles Interface Management | | | | |
| 3.5.4.1 | Manage Management Station—ASC Interface Requirements | | | | |
| 3.5.4.1.1 | Manage RSU Interface Requirements | | | | |
| 3.5.4.1.1.1 | Configure RSU Interface | G.3 | | | |
| | | | 5.16.1 | rsuCommPort | |
| 3.5.4.1.1.2 | Configure Logical RSU Ports | H.2.7 | | | |
| | | | 5.16.3 | rsuPortTable | |
| | | | 5.16.3.1 | rsuPortIndex | |
| | | | 5.16.3.2 | rsuPortPointer | |
| | | | 5.16.3.3 | rsuPortName | |
| | | | 1103v03 – A.6.2 | logicalNameTranslationTable | |
| | | | 1103v03 – A.6.2.1 | logicalNameTranslationIndex | |
| | | | 1103v03 – A.6.2.2 | logicalNameTranslationLogicalName | |
| | | | 1103v03 – A.6.2.3 | logicalNameTranslationNetworkAddress | |
| | | | 5.16.3.7 | rsuPortNumber | |

© 2023 AASHTO / ITE / NEMA Copy Per RTM Distribution Permission

| Requirements Traceability Matrix (RTM) | | | | | |
|---|---|---|---|---|---|
| **FR ID** | **Functional Requirement** | **Dialog ID** | **Object ID** | **Object Name** | **Additional Specifications** |
| 3.5.4.1.1.3 | Configure RSU Interface Polling Period | H.2.7 | | | |
| | | | 5.16.3 | rsuPortTable | |
| | | | 5.16.3.1 | rsuPortIndex | |
| | | | 5.16.3.4 | rsuPortPollingPeriod | |
| 3.5.4.1.2 | Manage RSU Interface Watchdog Requirements | | | | |
| 3.5.4.1.2.1 | Configure RSU Interface Watchdog | H.2.7 | | | |
| | | | 5.16.3 | rsuPortTable | |
| | | | 5.16.3.1 | rsuPortIndex | |
| | | | 5.16.3.5 | rsuPortWatchdogTime | |
| 3.5.4.1.2.2 | Monitor RSU Interface Watchdog Timer | H.2.5 | | | |
| | | | 5.16.2 | maxRsuPorts | |
| | | | 5.16.3 | rsuPortTable | |
| | | | 5.16.3.1 | rsuPortIndex | |
| | | | 5.16.3.6 | rsuPortWatchdogTimer | |
| 3.5.4.1.3 | Manage Signal Phase and Timing Requirements | | | | |
| 3.5.4.1.3.1 | Enable Signal Phase and Timing Data | G.3 | | | |
| | | | 5.17.4 | spatOptions | Bit 0 |
| 3.5.4.1.3.2 | Retrieve Intersection Identifier [Deprecated] | H.2.5 | | | |
| | | | 1217v01 – 1.3.6 | mapIntersectionTable | See 7.3.6. |
| | | | 1217v01 – 1.3.6.1 | mapIntersectionIndex | See 7.3.6.1. |
| | | | 1217v01 – 1.3.6.2 | mapIntersectionId | See 7.3.6.2. |
| | | | 1217v01 – 1.3.6.4 | mapIntersectionAuthority | See 7.3.6.4. |

Copy Per RTM Distribution Permission © 2023 AASHTO / ITE / NEMA

| Requirements Traceability Matrix (RTM) | | | | | |
|---|---|---|---|---|---|
| **FR ID** | **Functional Requirement** | **Dialog ID** | **Object ID** | **Object Name** | **Additional Specifications** |
| 3.5.4.1.3.3 | Retrieve Signal Phase and Timing Time Point [Deprecated] | G.1 | | | |
| | | | 5.17.6 | ascCurrentTick | |
| 3.5.4.1.3.4 | Retrieve Signal Phase and Timing Generation Time | G.1 | | | |
| | | | 5.17.1 | spatTimestamp | |
| 3.5.4.1.3.5 | Retrieve Signal Phase and Timing Intersection Status [Deprecated] | G.1 | | | |
| | | | 1217v01 – 1.2.1 | spatStatus | See 7.2.1. |
| 3.5.4.1.3.6 | Exchange Movement Status Requirements | | | | |
| 3.5.4.1.3.6.1 | Monitor Movement State [Deprecated] | H.2.5 | | | |
| | | | 5.9.1 | maxChannels | |
| | | | 5.9.2.1 | channelNumber | |
| | | | 1217v01 – 1.2.7 | signalStatusTable | See 7.2.7. |
| | | | 1217v01 – 1.2.7.1 | signalState | See 7.2.7.1 |
| 3.5.4.1.3.6.2 | Retrieve Movement Timing Requirements | | | | |
| 3.5.4.1.3.6.2.1 | Monitor Movement Minimum End Time [Deprecated] | H.2.5 | | | |
| | | | 5.9.1 | maxChannels | |
| | | | 5.9.2.1 | channelNumber | |
| | | | 1217v01 – 1.2.7 | signalStatusTable | See 7.2.7. |
| | | | 1217v01 – 1.2.7.2 | signalStateMinEndTick | See 7.2.7.2. |
| 3.5.4.1.3.6.2.2 | Monitor Movement Maximum End Time [Deprecated] | H.2.5 | | | |
| | | | 5.9.1 | maxChannels | |

© 2023 AASHTO / ITE / NEMA Copy Per RTM Distribution Permission

| Requirements Traceability Matrix (RTM) | | | | | |
|---|---|---|---|---|---|
| **FR ID** | **Functional Requirement** | **Dialog ID** | **Object ID** | **Object Name** | **Additional Specifications** |
| | | | 5.9.2.1 | channelNumber | |
| | | | 1217v01 – 1.2.7 | signalStatusTable | See 7.2.7. |
| | | | 1217v01 – 1.2.7.3 | signalStateMaxEndTick | See 7.2.7.3. |
| 3.5.4.1.3.6.2.3 | Monitor Movement Likely End Time [Deprecated] | H.2.5 | | | |
| | | | 5.9.1 | maxChannels | |
| | | | 5.9.2.1 | channelNumber | |
| | | | 1217v01 – 1.2.7 | signalStatusTable | See 7.2.7. |
| | | | 1217v01 – 1.2.7.4 | signalStateLikelyEndTick | See 7.2.7.4. |
| 3.5.4.1.3.6.2.4 | Monitor Movement Likely End Time Confidence [Deprecated] | H.2.5 | | | |
| | | | 5.9.1 | maxChannels | |
| | | | 5.9.2.1 | channelNumber | |
| | | | 1217v01 – 1.2.7 | signalStatusTable | See 7.2.7. |
| | | | 1217v01 – 1.2.7.5 | signalStateTickConfidence | See 7.2.7.5. |
| 3.5.4.1.3.6.2.5 | Monitor Movement Next Occurrence [Deprecated] | H.2.5 | | | |
| | | | 5.9.1 | maxChannels | |
| | | | 5.9.2.1 | channelNumber | |
| | | | 1217v01 – 1.2.7 | signalStatusTable | See 7.2.7. |
| | | | 1217v01 – 1.2.7.6 | signalNextTick | See 7.2.7.6. |
| 3.5.4.1.3.6.2.6 | Monitor Movement Minimum End Time V2 | H.2.5 | | | |

Copy Per RTM Distribution Permission
© 2023 AASHTO / ITE / NEMA

| Requirements Traceability Matrix (RTM) | | | | | |
|---|---|---|---|---|---|
| **FR ID** | **Functional Requirement** | **Dialog ID** | **Object ID** | **Object Name** | **Additional Specifications** |
| | | | 5.17.9 | maxSignalGroups | |
| | | | 1217v01 – 1.2.11 | maxMovementEvents | See 7.2.11. |
| | | | 1217v01 – 1.2.12 | signalStatusTable2 | See 7.2.12. |
| | | | 5.17.10.1 | signalGroupEntryNumber | |
| | | | 1217v01 – 1.2.12.1 | movementEventNumber | Row = 1, See 7.2.12.1. |
| | | | 1217v01 – 1.2.12.3 | signalStateMinEndTick2 | See 7.2.12.3. |
| 3.5.4.1.3.6.2.7 | Monitor Movement Maximum End Time V2 | H.2.5 | | | |
| | | | 5.17.9 | maxSignalGroups | |
| | | | 1217v01 – 1.2.11 | maxMovementEvents | See 7.2.11. |
| | | | 1217v01 – 1.2.12 | signalStatusTable2 | See 7.2.12. |
| | | | 5.17.10.1 | signalGroupEntryNumber | |
| | | | 1217v01 – 1.2.12.1 | movementEventNumber | Row = 1, See 7.2.12.1. |
| | | | 1217v01 – 1.2.12.4 | signalStateMaxEndTick2 | See 7.2.12.4. |
| 3.5.4.1.3.6.2.8 | Monitor Movement Likely End Time V2 | H.2.5 | | | |
| | | | 5.17.9 | maxSignalGroups | |
| | | | 1217v01 – 1.2.11 | maxMovementEvents | See 7.2.11. |
| | | | 1217v01 – 1.2.12 | signalStatusTable2 | See 7.2.12. |
| | | | 5.17.10.1 | signalGroupEntryNumber | |
| | | | 1217v01 – 1.2.12.1 | movementEventNumber | Row = 1, See 7.2.12.1. |

© 2023 AASHTO / ITE / NEMA Copy Per RTM Distribution Permission

| Requirements Traceability Matrix (RTM) | | | | | |
|---|---|---|---|---|---|
| **FR ID** | **Functional Requirement** | **Dialog ID** | **Object ID** | **Object Name** | **Additional Specifications** |
| | | | 1217v01 – 1.2.12.5 | signalStateLikelyEndTick2 | See 7.2.12.5. |
| 3.5.4.1.3.6.2.9 | Monitor Movement Likely End Time Confidence V2 | H.2.5 | | | |
| | | | 5.17.9 | maxSignalGroups | |
| | | | 1217v01 – 1.2.11 | maxMovementEvents | See 7.2.11. |
| | | | 1217v01 – 1.2.12 | signalStatusTable2 | See 7.2.12. |
| | | | 5.17.10.1 | signalGroupEntryNumber | |
| | | | 1217v01 – 1.2.12.1 | movementEventNumber | Row = 1, See 7.2.12.1. |
| | | | 1217v01 – 1.2.12.6 | signalStateTickConfidence2 | See 7.2.12.6. |
| 3.5.4.1.3.6.2.10 | Monitor Movement Next Occurrence V2 | H.2.5 | | | |
| | | | 5.17.9 | maxSignalGroups | |
| | | | 1217v01 – 1.2.11 | maxMovementEvents | See 7.2.11. |
| | | | 1217v01 – 1.2.12 | signalStatusTable2 | See 7.2.12. |
| | | | 5.17.10.1 | signalGroupEntryNumber | |
| | | | 1217v01 – 1.2.12.1 | movementEventNumber | Row = 1, See 7.2.12.1. |
| | | | 1217v01 – 1.2.12.7 | signalStateNextTick2 | See 7.2.12.7. |
| 3.5.4.1.3.6.2.11 | Monitor Next Movement Minimum End Time | H.2.5 | | | |
| | | | 5.17.9 | maxSignalGroups | |
| | | | 1217v01 – 1.2.11 | maxMovementEvents | See 7.2.11. |

Copy Per RTM Distribution Permission
© 2023 AASHTO / ITE / NEMA

| Requirements Traceability Matrix (RTM) | | | | | |
|---|---|---|---|---|---|
| **FR ID** | **Functional Requirement** | **Dialog ID** | **Object ID** | **Object Name** | **Additional Specifications** |
| | | | 1217v01 – 1.2.12 | signalStatusTable2 | See 7.2.12. |
| | | | 5.17.10.1 | signalGroupEntryNumber | |
| | | | 1217v01 – 1.2.12.1 | movementEventNumber | Row = 2, See 7.2.12.1. |
| | | | 1217v01 – 1.2.12.3 | signalStateMinEndTick2 | See 7.2.12.3. |
| 3.5.4.1.3.6.2.12 | Monitor Next Movement Maximum End Time | H.2.5 | | | |
| | | | 5.17.9 | maxSignalGroups | |
| | | | 1217v01 – 1.2.11 | maxMovementEvents | See 7.2.11. |
| | | | 1217v01 – 1.2.12 | signalStatusTable2 | See 7.2.12. |
| | | | 5.17.10.1 | signalGroupEntryNumber | |
| | | | 1217v01 – 1.2.12.1 | movementEventNumber | Row = 2, See 7.2.12.1. |
| | | | 1217v01 – 1.2.12.4 | signalStateMaxEndTick2 | See 7.2.12.4. |
| 3.5.4.1.3.6.2.13 | Monitor Next Movement Start Time | H.2.5 | | | |
| | | | 5.17.9 | maxSignalGroups | |
| | | | 1217v01 – 1.2.11 | maxMovementEvents | See 7.2.11. |
| | | | 1217v01 – 1.2.12 | signalStatusTable2 | See 7.2.12. |
| | | | 5.17.10.1 | signalGroupEntryNumber | |
| | | | 1217v01 – 1.2.12.1 | movementEventNumber | Row = 2, See 7.2.12.1. |
| | | | 1217v01 – 1.2.12.8 | signalStateStartTick | See 7.2.12.8. |

© 2023 AASHTO / ITE / NEMA Copy Per RTM Distribution Permission

| Requirements Traceability Matrix (RTM) | | | | | |
|---|---|---|---|---|---|
| **FR ID** | **Functional Requirement** | **Dialog ID** | **Object ID** | **Object Name** | **Additional Specifications** |
| 3.5.4.1.3.6.2.14 | Determine Maximum Number of Movement Events | G.1 | | | |
| | | | 1217v01 – 1.2.11 | maxMovementEvents | |
| 3.5.4.1.3.6.3 | Configure Movement Assistance Requirements | | | | |
| 3.5.4.1.3.6.3.1 | Configure Queue Detectors for Movement Assistance [Deprecated] | H.2.7 | | | |
| | | | 5.9.2.1 | channelNumber | |
| | | | 1217v01 – 1.2.5 | movementManeuverTable | See 7.2.5. |
| | | | 1217v01 – 1.2.5.1 | movementManeuverIndex | See 7.2.5.1. |
| | | | 1217v01 – 1.2.5.7 | movementManeuverQueueDetector | See 7.2.5.7. |
| 3.5.4.1.3.6.3.2 | Configure Pedestrian Detectors for Movement Assistance [Deprecated] | H.2.7 | | | |
| | | | 5.9.2.1 | channelNumber | |
| | | | 1217v01 – 1.2.5 | movementManeuverTable | See 7.2.5. |
| | | | 1217v01 – 1.2.5.1 | movementManeuverIndex | See 7.2.5.1. |
| | | | 1217v01 – 1.2.5.8 | movementManeuverPedPresence | See 7.2.5.8. |
| 3.5.4.1.3.6.3.3 | Configure Bicycle Detectors for Movement Assistance [Deprecated] | H.2.7 | | | |
| | | | 5.9.2.1 | channelNumber | |
| | | | 1217v01 – 1.2.5 | movementManeuverTable | See 7.2.5. |
| | | | 1217v01 – 1.2.5.1 | movementManeuverIndex | See 7.2.5.1. |

Copy Per RTM Distribution Permission © 2023 AASHTO / ITE / NEMA

| Requirements Traceability Matrix (RTM) | | | | | |
|---|---|---|---|---|---|
| **FR ID** | **Functional Requirement** | **Dialog ID** | **Object ID** | **Object Name** | **Additional Specifications** |
| | | | 1217v01 – 1.2.5.9 | movementManeuverBicyclePresence | See 7.2.5.9. |
| 3.5.4.1.3.6.3.4 | Configure Queue Detectors for Movement Assistance V2 | H.2.7 | | | |
| | | | 1217v01 – 1.2.15 | maxMovementManeuvers2 | See 7.2.15. |
| | | | 1217v01 – 1.2.16 | movementManeuverTable2 | See 7.2.16. |
| | | | 1217v01 – 1.2.16.1 | movementManeuverIndex2 | See 7.2.16.1. |
| | | | 1217v01 – 1.2.16.2 | movementManeuverSignalGroupEntryNumber | See 7.2.16.2. |
| | | | 1217v01 – 1.2.16.5 | movementManeuverQueueDetector2 | See 7.2.16.5. |
| 3.5.4.1.3.6.3.5 | Configure Pedestrian Detectors for Movement Assistance V2 | H.2.7 | | | |
| | | | 1217v01 – 1.2.15 | maxMovementManeuvers2 | See 7.2.15. |
| | | | 1217v01 – 1.2.16 | movementManeuverTable2 | See 7.2.16. |
| | | | 1217v01 – 1.2.16.1 | movementManeuverIndex2 | See 7.2.16.1. |
| | | | 1217v01 – 1.2.16.2 | movementManeuverSignalGroupEntryNumber | See 7.2.16.2. |
| | | | 1217v01 – 1.2.16.6 | movementManeuverPedPresence2 | See 7.2.16.6. |
| 3.5.4.1.3.6.3.6 | Configure Bicycle Detectors for Movement Assistance V2 | H.2.7 | | | |
| | | | 1217v01 – 1.2.15 | maxMovementManeuvers2 | See 7.2.15. |

© 2023 AASHTO / ITE / NEMA Copy Per RTM Distribution Permission

| Requirements Traceability Matrix (RTM) | | | | | |
|---|---|---|---|---|---|
| **FR ID** | **Functional Requirement** | **Dialog ID** | **Object ID** | **Object Name** | **Additional Specifications** |
| | | | 1217v01 – 1.2.16 | movementManeuverTable2 | See 7.2.16. |
| | | | 1217v01 – 1.2.16.1 | movementManeuverIndex2 | See 7.2.16.1. |
| | | | 1217v01 – 1.2.16.2 | movementManeuverSignalGroupEntryNumber | See 7.2.16.2. |
| | | | 1217v01 – 1.2.16.7 | movementManeuverBicyclePresence2 | See 7.2.16.7. |
| 3.5.4.1.3.6.4 | Retrieve Movement Assistance Requirements | | | | |
| 3.5.4.1.3.6.4.1 | Monitor Lane Connection Queue Length [Deprecated] | H.2.5 | | | |
| | | | 5.9.2.1 | channelNumber | |
| | | | 1217v01 – 1.2.4 | maxMovementManeuvers | See 7.2.4. |
| | | | 1217v01 – 1.2.5 | movementManeuverTable | See 7.2.5. |
| | | | 1217v01 – 1.2.5.1 | movementManeuverIndex | See 7.2.5.1. |
| | | | 1217v01 – 1.2.5.4 | movementManeuverQueue | See 7.2.5.4. |
| 3.5.4.1.3.6.4.2 | Monitor Lane Connection Available Storage Length [Deprecated] | H.2.5 | | | |
| | | | 5.9.2.1 | channelNumber | |
| | | | 1217v01 – 1.2.4 | maxMovementManeuvers | See 7.2.4. |
| | | | 1217v01 – 1.2.5 | movementManeuverTable | See 7.2.5. |
| | | | 1217v01 – 1.2.5.1 | movementManeuverIndex | See 7.2.5.1. |
| | | | 1217v01 – 1.2.5.5 | movementManeuverStorage | See 7.2.5.5. |

Copy Per RTM Distribution Permission © 2023 AASHTO / ITE / NEMA

| Requirements Traceability Matrix (RTM) | | | | | |
|---|---|---|---|---|---|
| **FR ID** | **Functional Requirement** | **Dialog ID** | **Object ID** | **Object Name** | **Additional Specifications** |
| 3.5.4.1.3.6.4.3 | Monitor Lane Connection Stop Line Wait [Deprecated] | H.2.5 | | | |
| | | | 5.9.2.1 | channelNumber | |
| | | | 1217v01 – 1.2.4 | maxMovementManeuvers | See 7.2.4. |
| | | | 1217v01 – 1.2.5 | movementManeuverTable | See 7.2.5. |
| | | | 1217v01 – 1.2.5.1 | movementManeuverIndex | See 7.2.5.1. |
| | | | 1217v01 – 1.2.5.6 | movementManeuverStatus | See 7.2.5.6. |
| 3.5.4.1.3.6.4.4 | Monitor Lane Connection Traveler Detection [Deprecated] | H.2.5 | | | |
| | | | 5.9.2.1 | channelNumber | |
| | | | 1217v01 – 1.2.4 | maxMovementManeuvers | See 7.2.4. |
| | | | 1217v01 – 1.2.5 | movementManeuverTable | See 7.2.5. |
| | | | 1217v01 – 1.2.5.1 | movementManeuverIndex | See 7.2.5.1. |
| | | | 1217v01 – 1.2.5.6 | movementManeuverStatus | See 7.2.5.6. |
| 3.5.4.1.3.6.4.5 | Monitor Lane Connection State [Deprecated] | H.2.5 | | | |
| | | | 5.9.2.1 | channelNumber | |
| | | | 1217v01 – 1.2.4 | maxMovementManeuvers | See 7.2.4. |
| | | | 1217v01 – 1.2.5 | movementManeuverTable | See 7.2.5. |
| | | | 1217v01 – 1.2.5.1 | movementManeuverIndex | See 7.2.5.1. |

© 2023 AASHTO / ITE / NEMA Copy Per RTM Distribution Permission

| Requirements Traceability Matrix (RTM) | | | | | |
|---|---|---|---|---|---|
| **FR ID** | **Functional Requirement** | **Dialog ID** | **Object ID** | **Object Name** | **Additional Specifications** |
| | | | 1217v01 – 1.2.5.3 | movementManeuverState | See 7.2.5.3. |
| 3.5.4.1.3.6.4.6 | Monitor Lane Connection Queue Length V2 | H.2.5 | | | |
| | | | 1217v01 – 1.2.15 | maxMovementManeuvers2 | See 7.2.15. |
| | | | 1217v01 – 1.2.16 | movementManeuverTable2 | See 7.2.16. |
| | | | 1217v01 – 1.2.16.1 | movementManeuverIndex2 | See 7.2.16.1. |
| | | | 1217v01 – 1.2.16.2 | movementManeuverSignalGroupEntryNumber | See 7.2.16.2. |
| | | | 1217v01 – 1.2.16.3 | movementManeuverQueue2 | See 7.2.16.3. |
| 3.5.4.1.3.6.4.7 | Monitor Lane Connection Traveler Detection V2 | H.2.5 | | | |
| | | | 1217v01 – 1.2.15 | maxMovementManeuvers2 | See 7.2.15. |
| | | | 1217v01 – 1.2.16 | movementManeuverTable2 | See 7.2.16. |
| | | | 1217v01 – 1.2.16.1 | movementManeuverIndex2 | See 7.2.16.1. |
| | | | 1217v01 – 1.2.16.2 | movementManeuverSignalGroupEntryNumber | See 7.2.16.2. |
| | | | 1217v01 – 1.2.16.4 | movementManeuverStatus2 | Bit = 1<br>See 7.2.16.4. |
| 3.5.4.1.3.6.5 | Manage Advisory Speed Requirements | | | | |
| 3.5.4.1.3.6.5.1 | Configure Advisory Speed Type [Deprecated] | H.2.7 | | | |
| | | | 5.9.2 | channelTable | |
| | | | 5.9.2.1 | channelNumber | |
| | | | 1217v01 – 1.2.3 | advisorySpeedTable | See 7.2.3. |

Copy Per RTM Distribution Permission
© 2023 AASHTO / ITE / NEMA

| Requirements Traceability Matrix (RTM) | | | | | |
|---|---|---|---|---|---|
| **FR ID** | **Functional Requirement** | **Dialog ID** | **Object ID** | **Object Name** | **Additional Specifications** |
| | | | 1217v01 – 1.2.3.1 | advisorySpeedIndex | See 7.2.3.1. |
| | | | 1217v01 – 1.2.3.2 | advisorySpeedType | See 7.2.3.2. |
| 3.5.4.1.3.6.5.2 | Configure Advisory Speed [Deprecated] | H.2.7 | | | |
| | | | 5.9.2 | channelTable | |
| | | | 5.9.2.1 | channelNumber | |
| | | | 1217v01 – 1.2.3 | advisorySpeedTable | See 7.2.3. |
| | | | 1217v01 – 1.2.3.1 | advisorySpeedIndex | See 7.2.3.1. |
| | | | 1217v01 – 1.2.3.3 | advisorySpeedAdvice | See 7.2.3.3. |
| 3.5.4.1.3.6.5.3 | Configure Advisory Speed Zone [Deprecated] | H.2.7 | | | |
| | | | 5.9.2 | channelTable | |
| | | | 5.9.2.1 | channelNumber | |
| | | | 1217v01 – 1.2.3 | advisorySpeedTable | See 7.2.3. |
| | | | 1217v01 – 1.2.3.1 | advisorySpeedIndex | See 7.2.3.1. |
| | | | 1217v01 – 1.2.3.4 | advisorySpeedZoneLength | See 7.2.3.4. |
| 3.5.4.1.3.6.5.4 | Configure Advisory Speed Vehicle Type [Deprecated] | H.2.7 | | | |
| | | | 5.9.2 | channelTable | |
| | | | 5.9.2.1 | channelNumber | |
| | | | 1217v01 – 1.2.3 | advisorySpeedTable | See 7.2.3. |
| | | | 1217v01 – 1.2.3.1 | advisorySpeedIndex | See 7.2.3.1. |

© 2023 AASHTO / ITE / NEMA Copy Per RTM Distribution Permission

| Requirements Traceability Matrix (RTM) | | | | | |
|---|---|---|---|---|---|
| **FR ID** | **Functional Requirement** | **Dialog ID** | **Object ID** | **Object Name** | **Additional Specifications** |
| | | | 1217v01 – 1.2.3.5 | advisorySpeedClass | See 7.2.3.5. |
| 3.5.4.1.3.6.5.5 | Retrieve Advisory Speed Confidence Level [Deprecated] | H.2.5 | | | |
| | | | 1217v01 – 1.2.2 | maxAdvisorySpeeds | See 7.2.2. |
| | | | 1217v01 – 1.2.3 | advisorySpeedTable | See 7.2.3. |
| | | | 1217v01 – 1.2.3.1 | advisorySpeedIndex | See 7.2.3.1. |
| | | | 1217v01 – 1.2.3.6 | advisorySpeedConfidence | See 7.2.3.6. |
| 3.5.4.1.3.6.5.6 | Configure Advisory Speed Type V2 | H.2.7 | | | |
| | | | 1217v01 – 1.2.13 | maxAdvisorySpeeds2 | See 7.2.13. |
| | | | 1217v01 – 1.2.14 | advisorySpeedTable2 | See 7.2.14. |
| | | | 1217v01 – 1.2.14.1 | advisorySpeedIndex2 | See 7.2.14.1. |
| | | | 1217v01 – 1.2.14.2 | advisorySpeedSignalGroupEntryNumber | See 7.2.14.2. |
| | | | 1217v01 – 1.2.14.3 | advisorySpeedType2 | See 7.2.14.3. |
| 3.5.4.1.3.6.5.7 | Configure Advisory Speed V2 | H.2.7 | | | |
| | | | 1217v01 – 1.2.13 | maxAdvisorySpeeds2 | See 7.2.13. |
| | | | 1217v01 – 1.2.14 | advisorySpeedTable2 | See 7.2.14. |
| | | | 1217v01 – 1.2.14.1 | advisorySpeedIndex2 | See 7.2.14.1. |

Copy Per RTM Distribution Permission © 2023 AASHTO / ITE / NEMA

| Requirements Traceability Matrix (RTM) | | | | | |
|---|---|---|---|---|---|
| **FR ID** | **Functional Requirement** | **Dialog ID** | **Object ID** | **Object Name** | **Additional Specifications** |
| | | | 1217v01 – 1.2.14.2 | advisorySpeedSignalGroupEntryNumber | See 7.2.14.2. |
| | | | 1217v01 – 1.2.14.4 | advisorySpeedAdvice2 | See 7.2.14.4. |
| 3.5.4.1.3.6.5.8 | Configure Advisory Speed Zone V2 | H.2.7 | | | |
| | | | 1217v01 – 1.2.13 | maxAdvisorySpeeds2 | See 7.2.13. |
| | | | 1217v01 – 1.2.14 | advisorySpeedTable2 | See 7.2.14. |
| | | | 1217v01 – 1.2.14.1 | advisorySpeedIndex2 | See 7.2.14.1. |
| | | | 1217v01 – 1.2.14.2 | advisorySpeedSignalGroupEntryNumber | See 7.2.14.2. |
| | | | 1217v01 – 1.2.14.5 | advisorySpeedZoneLength2 | See 7.2.14.5. |
| 3.5.4.1.3.6.5.9 | Configure Advisory Speed Vehicle Type V2 | H.2.7 | | | |
| | | | 1217v01 – 1.2.13 | maxAdvisorySpeeds2 | See 7.2.13. |
| | | | 1217v01 – 1.2.14 | advisorySpeedTable2 | See 7.2.14. |
| | | | 1217v01 – 1.2.14.1 | advisorySpeedIndex2 | See 7.2.14.1. |
| | | | 1217v01 – 1.2.14.2 | advisorySpeedSignalGroupEntryNumber | See 7.2.14.2. |
| | | | 1217v01 – 1.2.14.6 | advisorySpeedClass2 | See 7.2.14.6. |
| 3.5.4.1.3.6.6 | Monitor Movement Status [Deprecated] | G.1 | | | |
| | | | 1217v01 – 1.2.8 | signalStatusBlock | See 7.2.8. |
| 3.5.4.1.3.6.7 | Monitor Lane Connection Maneuver Status [Deprecated] | G.1 | | | |

© 2023 AASHTO / ITE / NEMA Copy Per RTM Distribution Permission

| Requirements Traceability Matrix (RTM) | | | | | |
|---|---|---|---|---|---|
| **FR ID** | **Functional Requirement** | **Dialog ID** | **Object ID** | **Object Name** | **Additional Specifications** |
| | | | 1217v01 – 1.2.9 | movementManeuverStatusBlock | See 7.2.9. |
| 3.5.4.1.3.6.8 | Monitor Movement State V2 | H.2.5 | | | |
| | | | 5.17.9 | maxSignalGroups | |
| | | | 1217v01 – 1.2.11 | maxMovementEvents | See 7.2.11. |
| | | | 1217v01 – 1.2.12 | signalStatusTable2 | See 7.2.12. |
| | | | 5.17.10.1 | signalGroupEntryNumber | |
| | | | 1217v01 – 1.2.12.1 | movementEventNumber | Row = 1, See 7.2.12.1. |
| | | | 1217v01 – 1.2.12.2 | signalState2 | See 7.2.12.2. |
| 3.5.4.1.3.6.9 | Monitor Next Movement State | H.2.5 | | | |
| | | | 5.17.9 | maxSignalGroups | |
| | | | 1217v01 – 1.2.11 | maxMovementEvents | See 7.2.11. |
| | | | 1217v01 – 1.2.12 | signalStatusTable2 | See 7.2.12. |
| | | | 5.17.10.1 | signalGroupEntryNumber | |
| | | | 1217v01 – 1.2.12.1 | movementEventNumber | Row = 2, See 7.2.12.1. |
| | | | 1217v01 – 1.2.12.2 | signalState2 | See 7.2.12.2. |
| 3.5.4.1.3.6.10 | Monitor Movement Status V2 | G.1 | | | |
| | | | 1217v01 – 1.2.18 | signalStatusBlock2 | See 7.2.18. |
| 3.5.4.1.3.7 | Manage Enabled Lane Requirements | | | | |
| 3.5.4.1.3.7.1 | Configure Concurrent Enabled Lanes | H.2.7 | | | |

Copy Per RTM Distribution Permission
© 2023 AASHTO / ITE / NEMA

| Requirements Traceability Matrix (RTM) | | | | | |
|---|---|---|---|---|---|
| **FR ID** | **Functional Requirement** | **Dialog ID** | **Object ID** | **Object Name** | **Additional Specifications** |
| | | | 5.17.13 | maxEnabledLanesConcurrency | |
| | | | 5.17.3 | spatEnabledLanesConcurrencyTable | |
| | | | 5.17.3.1 | enabledLaneIndex | |
| | | | 5.17.3.2 | enabledLaneConcurrency | |
| 3.5.4.1.3.7.2 | Configure Enabled Lanes for a Pattern [Deprecated] | H.2.7 | | | |
| | | | 5.5.7 | patternTable | |
| | | | 5.5.7.1 | patternNumber | |
| | | | 5.5.7.8 | patternSpatEnabledLanes | |
| 3.5.4.1.3.7.3 | Command Enabled Lanes [Deprecated] | 4.2.9 | | | |
| | | | 5.16.3 | rsuPortTable | |
| | | | 5.16.3.1 | rsuPortIndex | |
| | | | 5.17.2 | spatEnabledLanesCommand | |
| | | | 5.17.5 | spatPortTable | |
| | | | 5.17.5.2 | spatPortStatus | |
| 3.5.4.1.3.7.4 | Configure Enabled Lanes by Time of Day | H.2.7 | | | |
| | | | 5.6.2 | maxTimebaseAscActions | |
| | | | 5.6.3 | timebaseAscActionTable | |
| | | | 5.6.3.1 | timebaseAscActionNumber | |
| | | | 5.6.3.5 | timebaseAscEnabledLane | |
| 3.5.4.1.3.7.5 | Determine Lanes Enabled | G.1 | | | |
| | | | 1217v01 – 1.2.6 | spatEnabledLanesStatus | See 7.2.6. |
| 3.5.4.1.3.7.6 | Command Enabled Lanes V2 | 4.2.13 | | | |
| | | | 5.16.2 | maxRsuPorts | |
| | | | 5.16.3 | rsuPortTable | |
| | | | 5.16.3.1 | rsuPortIndex | |

© 2023 AASHTO / ITE / NEMA Copy Per RTM Distribution Permission

| Requirements Traceability Matrix (RTM) | | | | | |
|---|---|---|---|---|---|
| **FR ID** | **Functional Requirement** | **Dialog ID** | **Object ID** | **Object Name** | **Additional Specifications** |
| | | | 5.17.5 | spatPortTable | |
| | | | 5.17.5.2 | spatPortStatus | |
| | | | 5.17.14 | spatEnabledLanesCommand2 | |
| 3.5.4.1.3.8 | Configure Movement Type [Deprecated] | H.2.7 | | | |
| | | | 5.9.2 | channelTable | |
| | | | 5.9.2.1 | channelNumber | |
| | | | 5.9.2.6 | channelGreenType | |
| | | | 5.9.2.7 | channelGreenIncluded | |
| 3.5.4.1.3.9 | Configure Lane Connection Type [Deprecated] | H.2.7 | | | |
| | | | 5.9.2 | channelTable | |
| | | | 5.9.2.1 | channelNumber | |
| | | | 1217v01 – 1.2.5 | movementManeuverTable | See 7.2.5. |
| | | | 1217v01 – 1.2.5.1 | movementManeuverIndex | See 7.2.5.1. |
| | | | 1217v01 – 1.2.5.2 | movementManeuverId | See 7.2.5.2. |
| | | | 1217v01 – 1.2.5.10 | movementManeuverGreenType | See 7.2.5.10. |
| | | | 1217v01 – 1.2.5.11 | movementManeuverGreenIncluded | See 7.2.5.11. |
| 3.5.4.1.3.10 | Enable Signal Phase and Timing Data Exchange | H.2.7 | | | |
| | | | 5.16.3.1 | rsuPortIndex | |
| | | | 5.17.5 | spatPortTable | |
| | | | 5.17.5.1 | spatPortOptions | Bit 0 |
| 3.5.4.1.3.11 | Configure Road Authority | G.3 | | | |

Copy Per RTM Distribution Permission
© 2023 AASHTO / ITE / NEMA

| Requirements Traceability Matrix (RTM) | | | | | |
|---|---|---|---|---|---|
| **FR ID** | **Functional Requirement** | **Dialog ID** | **Object ID** | **Object Name** | **Additional Specifications** |
| | | | 1217v01 – 1.2.17 | spatRoadAuthorityID | See 7.2.17. |
| 3.5.4.1.3.12 | Retrieve Signal Phase and Timing Intersection Status Requirements | | | | |
| 3.5.4.1.3.12.1 | Monitor Manual Control Indication | G.1 | | | |
| | | | 1217v01 – 1.2.10 | spatStatus2 | Bit 0. See 7.2.10. |
| 3.5.4.1.3.12.2 | Monitor Stop Indication | G.1 | | | |
| | | | 1217v01 – 1.2.10 | spatStatus2 | Bit 1. See 7.2.10. |
| 3.5.4.1.3.12.3 | Monitor Failure Flash Indication | G.1 | | | |
| | | | 1217v01 – 1.2.10 | spatStatus2 | Bit 2. See 7.2.10. |
| 3.5.4.1.3.12.4 | Monitor Preemption Operation Indication | G.1 | | | |
| | | | 1217v01 – 1.2.10 | spatStatus2 | Bit 3. See 7.2.10. |
| 3.5.4.1.3.12.5 | Monitor Priority Operation Indication | G.1 | | | |
| | | | 1217v01 – 1.2.10 | spatStatus2 | Bit 4. See 7.2.10. |
| 3.5.4.1.3.12.6 | Monitor Fixed Time Control Indication | G.1 | | | |
| | | | 1217v01 – 1.2.10 | spatStatus2 | Bit 5. See 7.2.10. |
| 3.5.4.1.3.12.7 | Monitor Non-Fixed Time Control Indication | G.1 | | | |
| | | | 1217v01 – 1.2.10 | spatStatus2 | Bit 6. See 7.2.10. |
| 3.5.4.1.3.12.8 | Monitor Standby Operation Indication | G.1 | | | |
| | | | 1217v01 – 1.2.10 | spatStatus2 | Bit 7. See 7.2.10. |
| 3.5.4.1.3.12.9 | Monitor Controller Failure | G.1 | | | |

© 2023 AASHTO / ITE / NEMA Copy Per RTM Distribution Permission

| Requirements Traceability Matrix (RTM) | | | | | |
|---|---|---|---|---|---|
| **FR ID** | **Functional Requirement** | **Dialog ID** | **Object ID** | **Object Name** | **Additional Specifications** |
| | | | 1217v01 – 1.2.10 | spatStatus2 | Bit 8. See 7.2.10. |
| 3.5.4.1.3.12.10 | Monitor MAP Message Validity | G.1 | | | |
| | | | 1217v01 – 1.2.10 | spatStatus2 | Bit 12. See 7.2.10. |
| 3.5.4.1.3.12.11 | Monitor SPaT Data Validity | G.1 | | | |
| | | | 1217v01 – 1.2.10 | spatStatus2 | Bit 13. See 7.2.10. |
| 3.5.4.1.3.13 | Mark SPaT Invalid—Controller | G.3 | | | |
| | | | 5.17.4 | spatOptions | Bit 1 |
| 3.5.4.1.3.14 | Mark SPaT Invalid—Port | H.2.7 | | | |
| | | | 5.16.2 | maxRsuPorts | |
| | | | 5.16.3 | rsuPortTable | |
| | | | 5.16.3.1 | rsuPortIndex | |
| | | | 5.17.5 | spatPortTable | |
| | | | 5.17.5.1 | spatPortOptions | Bit 1 |
| 3.5.4.1.3.15 | Mark MAP Message Invalid—Controller | G.3 | | | |
| | | | 5.17.4 | spatOptions | Bit 2 |
| 3.5.4.1.3.16 | Mark MAP Message Invalid—Port | H.2.7 | | | |
| | | | 5.16.2 | maxRsuPorts | |
| | | | 5.16.3 | rsuPortTable | |
| | | | 5.16.3.1 | rsuPortIndex | |
| | | | 5.17.5 | spatPortTable | |
| | | | 5.17.5.1 | spatPortOptions | Bit 2 |
| 3.5.4.1.3.17 | Manage Signal Group Requirements | | | | |
| 3.5.4.1.3.17.1 | Determine Maximum Number of Signal Groups | G.1 | | | |

Copy Per RTM Distribution Permission
© 2023 AASHTO / ITE / NEMA

| Requirements Traceability Matrix (RTM) | | | | | |
|---|---|---|---|---|---|
| **FR ID** | **Functional Requirement** | **Dialog ID** | **Object ID** | **Object Name** | **Additional Specifications** |
| | | | 5.17.9 | maxSignalGroups | |
| 3.5.4.1.3.17.2 | Configure Signal Group Intersection Mapping | H.2.7 | | | |
| | | | 5.17.9 | maxSignalGroups | |
| | | | 5.17.10 | signalGroupEntryTable | |
| | | | 5.17.10.1 | signalGroupEntryNumber | |
| | | | 5.17.10.2 | signalGroupIntersection | |
| | | | 5.17.10.3 | signalGroupID | |
| 3.5.4.1.3.17.3 | Configure Signal Group Control Source | H.2.7 | | | |
| | | | 5.17.9 | maxSignalGroups | |
| | | | 5.17.10 | signalGroupEntryTable | |
| | | | 5.17.10.1 | signalGroupEntryNumber | |
| | | | 5.17.10.3 | signalGroupID | |
| | | | 5.17.10.4 | signalGroupControlSource | |
| | | | 5.17.10.5 | signalGroupControlType | Value = 2..6 |
| 3.5.4.1.3.17.4 | Configure Signal Group Indication Types | H.2.7 | | | |
| | | | 5.17.9 | maxSignalGroups | |
| | | | 5.17.10 | signalGroupEntryTable | |
| | | | 5.17.10.1 | signalGroupEntryNumber | |
| | | | 5.17.10.3 | signalGroupID | |
| | | | 5.17.10.6 | signalGroupGreenType | Value = 2..5 |
| | | | 5.17.10.7 | signalGroupRedType | Value = 2..3 |
| 3.5.4.1.3.17.5 | Configure Signal Group Permissive Control Source | H.2.7 | | | |
| | | | 5.17.9 | maxSignalGroups | |
| | | | 5.17.10 | signalGroupEntryTable | |
| | | | 5.17.10.1 | signalGroupEntryNumber | |
| | | | 5.17.10.3 | signalGroupID | |

© 2023 AASHTO / ITE / NEMA Copy Per RTM Distribution Permission

| Requirements Traceability Matrix (RTM) | | | | | |
|---|---|---|---|---|---|
| **FR ID** | **Functional Requirement** | **Dialog ID** | **Object ID** | **Object Name** | **Additional Specifications** |
| | | | 5.17.10.8 | signalGroupPermissiveControlSource | |
| | | | 5.17.10.9 | signalGroupPermissiveControlType | Value = 2..7 |
| 3.5.4.1.3.17.6 | Configure Signal Group Lanes | H.2.7 | | | |
| | | | 5.17.9 | maxSignalGroups | |
| | | | 5.17.10 | signalGroupEntryTable | |
| | | | 5.17.10.1 | signalGroupEntryNumber | |
| | | | 5.17.10.3 | signalGroupID | |
| | | | 5.17.10.10 | signalGroupLane | |
| 3.5.4.1.3.17.7 | Determine Maximum Number of Signal State Entries | G.1 | | | |
| | | | 5.17.11 | maxAgencySignalStates | |
| 3.5.4.1.3.17.8 | Configure Signal State Parameters | H.2.7 | | | |
| | | | 5.17.11 | maxAgencySignalStates | |
| | | | 5.17.12 | agencySignalStateTable | |
| | | | 5.17.12.1 | agencySignalStateNumber | |
| | | | 5.17.12.2 | agencySignalStateColor | Value = 2..8 |
| | | | 5.17.12.3 | agencySignalStateControlType | Value = 2..3 |
| | | | 5.17.12.4 | agencySignalStateOptions | |
| | | | 5.17.12.5 | agencySignalStateValue | Value = 2..11 |
| 3.5.4.1.3.18 | Retrieve Signal Phase and Timing Time Point V2 | G.1 | | | |
| | | | 5.17.8 | ascCurrentTick2 | |
| 3.5.4.2 | Manage Management Station – CV Roadside Process Interface Requirements [Deprecated] | | | | |
| 3.5.4.2.1 | Manage Roadway Geometrics Information Requirements [Deprecated] | | | | |

Copy Per RTM Distribution Permission
© 2023 AASHTO / ITE / NEMA

| Requirements Traceability Matrix (RTM) | | | | | |
|---|---|---|---|---|---|
| **FR ID** | **Functional Requirement** | **Dialog ID** | **Object ID** | **Object Name** | **Additional Specifications** |
| 3.5.4.2.1.1 | Configure Roadway Geometry Plans Requirements [Deprecated] | | | | |
| 3.5.4.2.1.1.1 | Configure Intersection Identifier [Deprecated] | H.2.7 | | | |
| | | | 1217v01 – 1.3.6 | mapIntersectionTable | See 7.3.6. |
| | | | 1217v01 – 1.3.6.1 | mapIntersectionIndex | See 7.3.6.1. |
| | | | 1217v01 – 1.3.6.2 | mapIntersectionId | See 7.3.6.2. |
| | | | 1217v01 – 1.3.6.4 | mapIntersectionAuthority | See 7.3.6.4. |
| 3.5.4.2.1.1.2 | Configure Intersection Location [Deprecated] | H.2.7 | | | |
| | | | 1217v01 – 1.3.6 | mapIntersectionTable | See 7.3.6. |
| | | | 1217v01 – 1.3.6.1 | mapIntersectionIndex | See 7.3.6.1. |
| | | | 1217v01 – 1.3.6.5 | mapIntersectionLatitude | See 7.3.6.5. |
| | | | 1217v01 – 1.3.6.6 | mapIntersectionLongitude | See 7.3.6.6. |
| | | | 1217v01 – 1.3.6.7 | mapIntersectionElevation | See 7.3.6.7. |
| 3.5.4.2.1.1.3 | Configure Intersection Name [Deprecated] | H.2.7 | | | |
| | | | 1217v01 – 1.3.6 | mapIntersectionTable | See 7.3.6. |
| | | | 1217v01 – 1.3.6.1 | mapIntersectionIndex | See 7.3.6.1. |
| | | | 1217v01 – 1.3.6.3 | mapIntersectionName | See 7.3.6.3. |
| 3.5.4.2.1.1.4 | Configure Intersection Default Lane Width [Deprecated] | H.2.7 | | | |

© 2023 AASHTO / ITE / NEMA Copy Per RTM Distribution Permission

| Requirements Traceability Matrix (RTM) | | | | | |
|---|---|---|---|---|---|
| **FR ID** | **Functional Requirement** | **Dialog ID** | **Object ID** | **Object Name** | **Additional Specifications** |
| | | | 1217v01 – 1.3.6 | mapIntersectionTable | See 7.3.6. |
| | | | 1217v01 – 1.3.6.1 | mapIntersectionIndex | See 7.3.6.1. |
| | | | 1217v01 – 1.3.6.8 | mapIntersectionDefaultWidth | See 7.3.6.8. |
| 3.5.4.2.1.1.5 | Manage Lane Requirements [Deprecated] | | | | |
| 3.5.4.2.1.1.5.1 | Configure Lane Identifier [Deprecated] | H.2.7 | | | |
| | | | 1217v01 – 1.3.4 | mapLaneTable | See 7.3.4. |
| | | | 1217v01 – 1.3.4.1 | mapLaneIndex | See 7.3.4.1. |
| | | | 1217v01 – 1.3.4.2 | mapLaneIntersection | See 7.3.4.2. |
| | | | 1217v01 – 1.3.4.3 | mapLaneNumber | See 7.3.4.3. |
| | | | 1217v01 – 1.3.4.13 | mapLaneCRC | See 7.3.4.13. |
| 3.5.4.2.1.1.5.2 | Configure Lane Description [Deprecated] | H.2.7 | | | |
| | | | 1217v01 – 1.3.4 | mapLaneTable | See 7.3.4. |
| | | | 1217v01 – 1.3.4.1 | mapLaneIndex | See 7.3.4.1. |
| | | | 1217v01 – 1.3.4.4 | mapLaneName | See 7.3.4.4. |
| 3.5.4.2.1.1.5.3 | Configure Ingress Approach [Deprecated] | H.2.7 | | | |
| | | | 1217v01 – 1.3.4 | mapLaneTable | See 7.3.4. |
| | | | 1217v01 – 1.3.4.1 | mapLaneIndex | See 7.3.4.1. |

Copy Per RTM Distribution Permission
© 2023 AASHTO / ITE / NEMA

| Requirements Traceability Matrix (RTM) | | | | | |
|---|---|---|---|---|---|
| **FR ID** | **Functional Requirement** | **Dialog ID** | **Object ID** | **Object Name** | **Additional Specifications** |
| | | | 1217v01 – 1.3.4.11 | mapLaneIngress | See 7.3.4.11. |
| 3.5.4.2.1.1.5.4 | Configure Egress Approach [Deprecated] | H.2.7 | | | |
| | | | 1217v01 – 1.3.4 | mapLaneTable | See 7.3.4. |
| | | | 1217v01 – 1.3.4.1 | mapLaneIndex | See 7.3.4.1. |
| | | | 1217v01 – 1.3.4.12 | mapLaneEgress | See 7.3.4.12. |
| 3.5.4.2.1.1.5.5 | Configure Allowed Lane Direction [Deprecated] | H.2.7 | | | |
| | | | 1217v01 – 1.3.4 | mapLaneTable | See 7.3.4. |
| | | | 1217v01 – 1.3.4.1 | mapLaneIndex | See 7.3.4.1. |
| | | | 1217v01 – 1.3.4.5 | mapLaneDirection | See 7.3.4.5. |
| | | | 1217v01 – 1.3.4.13 | mapLaneCRC | See 7.3.4.13. |
| 3.5.4.2.1.1.5.6 | Configure Vehicle Lane Attributes [Deprecated] | H.2.7 | | | |
| | | | 1217v01 – 1.3.4 | mapLaneTable | See 7.3.4. |
| | | | 1217v01 – 1.3.4.1 | mapLaneIndex | See 7.3.4.1. |
| | | | 1217v01 – 1.3.4.7 | mapLaneType | See 7.3.4.7. |
| | | | 1217v01 – 1.3.4.8 | mapLaneAttribute | See 7.3.4.8. |
| | | | 1217v01 – 1.3.4.13 | mapLaneCRC | See 7.3.4.13. |

© 2023 AASHTO / ITE / NEMA Copy Per RTM Distribution Permission

| Requirements Traceability Matrix (RTM) | | | | | |
|---|---|---|---|---|---|
| **FR ID** | **Functional Requirement** | **Dialog ID** | **Object ID** | **Object Name** | **Additional Specifications** |
| 3.5.4.2.1.1.5.7 | Configure Crosswalk Attributes [Deprecated] | H.2.7 | | | |
| | | | 1217v01 – 1.3.4 | mapLaneTable | See 7.3.4. |
| | | | 1217v01 – 1.3.4.1 | mapLaneIndex | See 7.3.4.1. |
| | | | 1217v01 – 1.3.4.7 | mapLaneType | See 7.3.4.7. |
| | | | 1217v01 – 1.3.4.8 | mapLaneAttribute | See 7.3.4.8. |
| | | | 1217v01 – 1.3.4.13 | mapLaneCRC | See 7.3.4.13. |
| 3.5.4.2.1.1.5.8 | Configure Bicycle Lane Attributes [Deprecated] | H.2.7 | | | |
| | | | 1217v01 – 1.3.4 | mapLaneTable | See 7.3.4. |
| | | | 1217v01 – 1.3.4.1 | mapLaneIndex | See 7.3.4.1. |
| | | | 1217v01 – 1.3.4.7 | mapLaneType | See 7.3.4.7. |
| | | | 1217v01 – 1.3.4.8 | mapLaneAttribute | See 7.3.4.8. |
| | | | 1217v01 – 1.3.4.13 | mapLaneCRC | See 7.3.4.13. |
| 3.5.4.2.1.1.5.9 | Configure Sidewalk Attributes [Deprecated] | H.2.7 | | | |
| | | | 1217v01 – 1.3.4 | mapLaneTable | See 7.3.4. |
| | | | 1217v01 – 1.3.4.1 | mapLaneIndex | See 7.3.4.1. |
| | | | 1217v01 – 1.3.4.7 | mapLaneType | See 7.3.4.7. |

Copy Per RTM Distribution Permission © 2023 AASHTO / ITE / NEMA

| Requirements Traceability Matrix (RTM) | | | | | |
|---|---|---|---|---|---|
| **FR ID** | **Functional Requirement** | **Dialog ID** | **Object ID** | **Object Name** | **Additional Specifications** |
| | | | 1217v01 – 1.3.4.8 | mapLaneAttribute | See 7.3.4.8. |
| | | | 1217v01 – 1.3.4.13 | mapLaneCRC | See 7.3.4.13. |
| 3.5.4.2.1.1.5.10 | Configure Barrier Attributes [Deprecated] | H.2.7 | | | |
| | | | 1217v01 – 1.3.4 | mapLaneTable | See 7.3.4. |
| | | | 1217v01 – 1.3.4.1 | mapLaneIndex | See 7.3.4.1. |
| | | | 1217v01 – 1.3.4.7 | mapLaneType | See 7.3.4.7. |
| | | | 1217v01 – 1.3.4.8 | mapLaneAttribute | See 7.3.4.8. |
| | | | 1217v01 – 1.3.4.13 | mapLaneCRC | See 7.3.4.13. |
| 3.5.4.2.1.1.5.11 | Configure Striping Lane Attributes [Deprecated] | H.2.7 | | | |
| | | | 1217v01 – 1.3.4 | mapLaneTable | See 7.3.4. |
| | | | 1217v01 – 1.3.4.1 | mapLaneIndex | See 7.3.4.1. |
| | | | 1217v01 – 1.3.4.7 | mapLaneType | See 7.3.4.7. |
| | | | 1217v01 – 1.3.4.8 | mapLaneAttribute | See 7.3.4.8. |
| | | | 1217v01 – 1.3.4.13 | mapLaneCRC | See 7.3.4.13. |
| 3.5.4.2.1.1.5.12 | Configure Tracked Lane Attributes [Deprecated] | H.2.7 | | | |

© 2023 AASHTO / ITE / NEMA Copy Per RTM Distribution Permission

| Requirements Traceability Matrix (RTM) | | | | | |
|---|---|---|---|---|---|
| **FR ID** | **Functional Requirement** | **Dialog ID** | **Object ID** | **Object Name** | **Additional Specifications** |
| | | | 1217v01 – 1.3.4 | mapLaneTable | See 7.3.4. |
| | | | 1217v01 – 1.3.4.1 | mapLaneIndex | See 7.3.4.1. |
| | | | 1217v01 – 1.3.4.7 | mapLaneType | See 7.3.4.7. |
| | | | 1217v01 – 1.3.4.8 | mapLaneAttribute | See 7.3.4.8. |
| | | | 1217v01 – 1.3.4.13 | mapLaneCRC | See 7.3.4.13. |
| 3.5.4.2.1.1.5.13 | Configure Parked Lane Attributes [Deprecated] | H.2.7 | | | |
| | | | 1217v01 – 1.3.4 | mapLaneTable | See 7.3.4. |
| | | | 1217v01 – 1.3.4.1 | mapLaneIndex | See 7.3.4.1. |
| | | | 1217v01 – 1.3.4.7 | mapLaneType | See 7.3.4.7. |
| | | | 1217v01 – 1.3.4.8 | mapLaneAttribute | See 7.3.4.8. |
| | | | 1217v01 – 1.3.4.13 | mapLaneCRC | See 7.3.4.13. |
| 3.5.4.2.1.1.5.14 | Configure Shared Lanes Attributes [Deprecated] | H.2.7 | | | |
| | | | 1217v01 – 1.3.4 | mapLaneTable | See 7.3.4. |
| | | | 1217v01 – 1.3.4.1 | mapLaneIndex | See 7.3.4.1. |
| | | | 1217v01 – 1.3.4.6 | mapLaneSharing | See 7.3.4.6. |

Copy Per RTM Distribution Permission
© 2023 AASHTO / ITE / NEMA

| Requirements Traceability Matrix (RTM) | | | | | |
|---|---|---|---|---|---|
| **FR ID** | **Functional Requirement** | **Dialog ID** | **Object ID** | **Object Name** | **Additional Specifications** |
| | | | 1217v01 – 1.3.4.13 | mapLaneCRC | See 7.3.4.13. |
| 3.5.4.2.1.1.5.15 | Configure Allowed Maneuvers [Deprecated] | H.2.7 | | | |
| | | | 1217v01 – 1.3.4 | mapLaneTable | See 7.3.4. |
| | | | 1217v01 – 1.3.4.1 | mapLaneIndex | See 7.3.4.1. |
| | | | 1217v01 – 1.3.4.9 | mapLaneManeuver | See 7.3.4.9. |
| | | | 1217v01 – 1.3.4.13 | mapLaneCRC | See 7.3.4.13. |
| 3.5.4.2.1.1.5.16 | Configure Lane Path [Deprecated] | 4.2.4 | | | |
| | | | 1217v01 – 1.3.4.1 | mapLaneIndex | See 7.3.4.1. |
| | | | 1217v01 – 1.3.4.13 | mapLaneCRC | See 7.3.4.13. |
| | | | 1217v01 – 1.3.8 | mapNodePointTable | See 7.3.8. |
| | | | 1217v01 – 1.3.8.1 | mapNodePointNumber | See 7.3.8.1. |
| | | | 1217v01 – 1.3.8.2 | mapNodePointX | See 7.3.8.2. |
| | | | 1217v01 – 1.3.8.3 | mapNodePointY | See 7.3.8.3. |
| | | | 1217v01 – 1.3.8.4 | mapNodePointAttribute | See 7.3.8.4. |
| 3.5.4.2.1.1.6 | Configure Node Point Requirements [Deprecated] | | | | |
| 3.5.4.2.1.1.6.1 | Configure Node Point Attributes [Deprecated] | H.2.7 | | | |

© 2023 AASHTO / ITE / NEMA Copy Per RTM Distribution Permission

| Requirements Traceability Matrix (RTM) | | | | | |
|---|---|---|---|---|---|
| **FR ID** | **Functional Requirement** | **Dialog ID** | **Object ID** | **Object Name** | **Additional Specifications** |
| | | | 1217v01 – 1.3.4.1 | mapLaneIndex | See 7.3.4.1. |
| | | | 1217v01 – 1.3.8 | mapNodePointTable | See 7.3.8. |
| | | | 1217v01 – 1.3.8.1 | mapNodePointNumber | See 7.3.8.1. |
| | | | 1217v01 – 1.3.8.4 | mapNodePointAttribute | See 7.3.8.4. |
| 3.5.4.2.1.1.6.2 | Configure Lane Segment Attributes [Deprecated] | H.2.7 | | | |
| | | | 1217v01 – 1.3.4.1 | mapLaneIndex | See 7.3.4.1. |
| | | | 1217v01 – 1.3.8 | mapNodePointTable | See 7.3.8. |
| | | | 1217v01 – 1.3.8.1 | mapNodePointNumber | See 7.3.8.1. |
| | | | 1217v01 – 1.3.8.5 | mapNodeSegmentAttribute | See 7.3.8.5. |
| 3.5.4.2.1.1.6.3 | Configure Lane End Point Angle [Deprecated] | H.2.7 | | | |
| | | | 1217v01 – 1.3.4.1 | mapLaneIndex | See 7.3.4.1. |
| | | | 1217v01 – 1.3.8 | mapNodePointTable | See 7.3.8. |
| | | | 1217v01 – 1.3.8.1 | mapNodePointNumber | See 7.3.8.1. |
| | | | 1217v01 – 1.3.8.6 | mapNodePointEndAngle | See 7.3.8.6. |
| 3.5.4.2.1.1.6.4 | Configure Lane Crown Angle—Center [Deprecated] | H.2.7 | | | |

Copy Per RTM Distribution Permission © 2023 AASHTO / ITE / NEMA

| Requirements Traceability Matrix (RTM) | | | | | |
|---|---|---|---|---|---|
| **FR ID** | **Functional Requirement** | **Dialog ID** | **Object ID** | **Object Name** | **Additional Specifications** |
| | | | 1217v01 – 1.3.4.1 | mapLaneIndex | See 7.3.4.1. |
| | | | 1217v01 – 1.3.8 | mapNodePointTable | See 7.3.8. |
| | | | 1217v01 – 1.3.8.1 | mapNodePointNumber | See 7.3.8.1. |
| | | | 1217v01 – 1.3.8.7 | mapNodePointCrownCenter | See 7.3.8.7. |
| 3.5.4.2.1.1.6.5 | Configure Lane Crown Angle—Left Edge [Deprecated] | H.2.7 | | | |
| | | | 1217v01 – 1.3.4.1 | mapLaneIndex | See 7.3.4.1. |
| | | | 1217v01 – 1.3.8 | mapNodePointTable | See 7.3.8. |
| | | | 1217v01 – 1.3.8.1 | mapNodePointNumber | See 7.3.8.1. |
| | | | 1217v01 – 1.3.8.8 | mapNodePointCrownLeft | See 7.3.8.8. |
| 3.5.4.2.1.1.6.6 | Configure Lane Crown Angle—Right Edge [Deprecated] | H.2.7 | | | |
| | | | 1217v01 – 1.3.4.1 | mapLaneIndex | See 7.3.4.1. |
| | | | 1217v01 – 1.3.8 | mapNodePointTable | See 7.3.8. |
| | | | 1217v01 – 1.3.8.1 | mapNodePointNumber | See 7.3.8.1. |
| | | | 1217v01 – 1.3.8.9 | mapNodePointCrownRight | See 7.3.8.9. |
| 3.5.4.2.1.1.6.7 | Configure Lane Angle [Deprecated] | H.2.7 | | | |
| | | | 1217v01 – 1.3.4.1 | mapLaneIndex | See 7.3.4.1. |

© 2023 AASHTO / ITE / NEMA Copy Per RTM Distribution Permission

| Requirements Traceability Matrix (RTM) | | | | | |
|---|---|---|---|---|---|
| **FR ID** | **Functional Requirement** | **Dialog ID** | **Object ID** | **Object Name** | **Additional Specifications** |
| | | | 1217v01 – 1.3.8 | mapNodePointTable | See 7.3.8. |
| | | | 1217v01 – 1.3.8.1 | mapNodePointNumber | See 7.3.8.1. |
| | | | 1217v01 – 1.3.8.10 | mapNodePointAngle | See 7.3.8.10. |
| 3.5.4.2.1.1.6.8 | Configure Speed Limit Type at Node [Deprecated] | 4.2.6 | | | |
| | | | 1217v01 – 1.3.4.1 | mapLaneIndex | See 7.3.4.1. |
| | | | 1217v01 – 1.3.8 | mapNodePointTable | See 7.3.8. |
| | | | 1217v01 – 1.3.8.1 | mapNodePointNumber | See 7.3.8.1. |
| | | | 1217v01 – 1.3.8.13 | mapNodePointSpeedLimits | See 7.3.8.13. |
| | | | 1217v01 – 1.3.14 | mapSpeedLimitTable | See 7.3.14. |
| | | | 1217v01 – 1.3.14.1 | mapSpeedLimitIndex | See 7.3.14.1. |
| | | | 1217v01 – 1.3.14.2 | mapSpeedLimitType | See 7.3.14.2. |
| | | | 1217v01 – 1.3.14.3 | mapSpeedLimit | See 7.3.14.3. |
| 3.5.4.2.1.1.6.9 | Configure Speed Limit at Node [Deprecated] | 4.2.6 | | | |
| | | | 1217v01 – 1.3.4.1 | mapLaneIndex | See 7.3.4.1. |
| | | | 1217v01 – 1.3.8 | mapNodePointTable | See 7.3.8. |
| | | | 1217v01 – 1.3.8.1 | mapNodePointNumber | See 7.3.8.1. |

Copy Per RTM Distribution Permission © 2023 AASHTO / ITE / NEMA

| Requirements Traceability Matrix (RTM) | | | | | |
|---|---|---|---|---|---|
| **FR ID** | **Functional Requirement** | **Dialog ID** | **Object ID** | **Object Name** | **Additional Specifications** |
| | | | 1217v01 – 1.3.8.13 | mapNodePointSpeedLimits | See 7.3.8.13. |
| | | | 1217v01 – 1.3.14 | mapSpeedLimitTable | See 7.3.14. |
| | | | 1217v01 – 1.3.14.1 | mapSpeedLimitIndex | See 7.3.14.1. |
| | | | 1217v01 – 1.3.14.2 | mapSpeedLimitType | See 7.3.14.2. |
| | | | 1217v01 – 1.3.14.3 | mapSpeedLimit | See 7.3.14.3. |
| 3.5.4.2.1.1.6.10 | Configure Lane Width Delta [Deprecated] | H.2.7 | | | |
| | | | 1217v01 – 1.3.4.1 | mapLaneIndex | See 7.3.4.1. |
| | | | 1217v01 – 1.3.8 | mapNodePointTable | See 7.3.8. |
| | | | 1217v01 – 1.3.8.1 | mapNodePointNumber | See 7.3.8.1. |
| | | | 1217v01 – 1.3.8.11 | mapNodePointWidth | See 7.3.8.11. |
| 3.5.4.2.1.1.6.11 | Configure Lane Elevation Delta [Deprecated] | H.2.7 | | | |
| | | | 1217v01 – 1.3.4.1 | mapLaneIndex | See 7.3.4.1. |
| | | | 1217v01 – 1.3.8 | mapNodePointTable | See 7.3.8. |
| | | | 1217v01 – 1.3.8.1 | mapNodePointNumber | See 7.3.8.1. |
| | | | 1217v01 – 1.3.8.12 | mapNodePointElevation | See 7.3.8.12. |

© 2023 AASHTO / ITE / NEMA Copy Per RTM Distribution Permission

| Requirements Traceability Matrix (RTM) | | | | | |
|---|---|---|---|---|---|
| **FR ID** | **Functional Requirement** | **Dialog ID** | **Object ID** | **Object Name** | **Additional Specifications** |
| 3.5.4.2.1.1.7 | Configure Computed Lane Requirements [Deprecated] | | | | |
| 3.5.4.2.1.1.7.1 | Configure Computed Lane Reference [Deprecated] | 4.2.2 | | | |
| | | | 1217v01 – 1.3.4.1 | mapLaneIndex | See 7.3.4.1. |
| | | | 1217v01 – 1.3.10 | mapComputedLaneTable | See 7.3.10. |
| | | | 1217v01 – 1.3.10.1 | mapComputedLaneReference | See 7.3.10.1. |
| 3.5.4.2.1.1.7.2 | Configure Computed Lane X Offset [Deprecated] | 4.2.2 | | | |
| | | | 1217v01 – 1.3.4.1 | mapLaneIndex | See 7.3.4.1. |
| | | | 1217v01 – 1.3.10 | mapComputedLaneTable | See 7.3.10. |
| | | | 1217v01 – 1.3.10.2 | mapComputedLaneXOffset | See 7.3.10.2. |
| 3.5.4.2.1.1.7.3 | Configure Computed Lane Y Offset [Deprecated] | 4.2.2 | | | |
| | | | 1217v01 – 1.3.4.1 | mapLaneIndex | See 7.3.4.1. |
| | | | 1217v01 – 1.3.10 | mapComputedLaneTable | See 7.3.10. |
| | | | 1217v01 – 1.3.10.3 | mapComputedLaneYOffset | See 7.3.10.3. |
| 3.5.4.2.1.1.7.4 | Configure Computed Lane Rotation [Deprecated] | 4.2.2 | | | |
| | | | 1217v01 – 1.3.4.1 | mapLaneIndex | See 7.3.4.1. |

Copy Per RTM Distribution Permission
© 2023 AASHTO / ITE / NEMA

| Requirements Traceability Matrix (RTM) | | | | | |
|---|---|---|---|---|---|
| **FR ID** | **Functional Requirement** | **Dialog ID** | **Object ID** | **Object Name** | **Additional Specifications** |
| | | | 1217v01 – 1.3.10 | mapComputedLaneTable | See 7.3.10. |
| | | | 1217v01 – 1.3.10.4 | mapComputedLaneAngle | See 7.3.10.4. |
| 3.5.4.2.1.1.7.5 | Configure Computed Lane X Scale [Deprecated] | 4.2.2 | | | |
| | | | 1217v01 – 1.3.4.1 | mapLaneIndex | See 7.3.4.1. |
| | | | 1217v01 – 1.3.10 | mapComputedLaneTable | See 7.3.10. |
| | | | 1217v01 – 1.3.10.5 | mapComputedLaneXScale | See 7.3.10.5. |
| 3.5.4.2.1.1.7.6 | Configure Computed Lane Y Scale [Deprecated] | 4.2.2 | | | |
| | | | 1217v01 – 1.3.4.1 | mapLaneIndex | See 7.3.4.1. |
| | | | 1217v01 – 1.3.10 | mapComputedLaneTable | See 7.3.10. |
| | | | 1217v01 – 1.3.10.6 | mapComputedLaneYScale | See 7.3.10.6. |
| 3.5.4.2.1.1.8 | Configure Overlays [Deprecated] | H.2.7 | | | |
| | | | 1217v01 – 1.3.4 | mapLaneTable | See 7.3.4. |
| | | | 1217v01 – 1.3.4.1 | mapLaneIndex | See 7.3.4.1. |
| | | | 1217v01 – 1.3.4.10 | mapLaneOverlay | See 7.3.4.10. |
| 3.5.4.2.1.1.9 | Configure Applicable Users [Deprecated] | H.2.7 | | | |
| | | | 1217v01 – 1.3.16 | mapUserTable | See 7.3.16. |

© 2023 AASHTO / ITE / NEMA Copy Per RTM Distribution Permission

| Requirements Traceability Matrix (RTM) | | | | | |
|---|---|---|---|---|---|
| **FR ID** | **Functional Requirement** | **Dialog ID** | **Object ID** | **Object Name** | **Additional Specifications** |
| | | | 1217v01 – 1.3.16.1 | mapUserIndex | See 7.3.16.1. |
| | | | 1217v01 – 1.3.16.2 | mapUserClassTypes | See 7.3.16.2. |
| 3.5.4.2.1.2 | Retrieve Roadway Geometry Plans Requirements [Deprecated] | | | | |
| 3.5.4.2.1.2.1 | Determine Maximum Number of Intersections Supported [Deprecated] | G.1 | | | |
| | | | 1217v01 – 1.3.5 | maxMapIntersections | See 7.3.5. |
| 3.5.4.2.1.2.2 | Determine Maximum Number of Lanes Supported [Deprecated] | G.1 | | | |
| | | | 1217v01 – 1.3.3 | maxLanes | See 7.3.3. |
| 3.5.4.2.1.2.3 | Determine Maximum Number of Computed Lanes Supported [Deprecated] | G.1 | | | |
| | | | 1217v01 – 1.3.9 | maxComputedLanes | See 7.3.9. |
| 3.5.4.2.1.2.4 | Determine Maximum Number of Node Points Supported [Deprecated] | G.1 | | | |
| | | | 1217v01 – 1.3.7 | maxNodePoints | See 7.3.7. |
| 3.5.4.2.1.2.5 | Determine Maximum Number of Speed Limits Supported [Deprecated] | G.1 | | | |
| | | | 1217v01 – 1.3.13 | maxSpeedLimits | See 7.3.13. |
| 3.5.4.2.1.2.6 | Determine Maximum Number of Vehicle Type Definitions [Deprecated] | G.1 | | | |
| | | | 1217v01 – 1.3.15 | maxUserTypes | See 7.3.15. |

Copy Per RTM Distribution Permission
© 2023 AASHTO / ITE / NEMA

| Requirements Traceability Matrix (RTM) | | | | | |
|---|---|---|---|---|---|
| **FR ID** | **Functional Requirement** | **Dialog ID** | **Object ID** | **Object Name** | **Additional Specifications** |
| 3.5.4.2.1.3 | Configure Roadway Geometry Plan Metadata Requirements [Deprecated] | | | | |
| 3.5.4.2.1.3.1 | Configure Roadway Geometry Plan Process Method [Deprecated] | H.2.7 | | | |
| | | | 1217v01 – 1.3.18 | mapPlanTable | See 7.3.18. |
| | | | 1217v01 – 1.3.18.1 | mapPlanIndex | See 7.3.18.1. |
| | | | 1217v01 – 1.3.18.6 | mapPlanMetadataMethod | See 7.3.18.6. |
| 3.5.4.2.1.3.2 | Configure Roadway Geometry Plan Process Agency [Deprecated] | H.2.7 | | | |
| | | | 1217v01 – 1.3.18 | mapPlanTable | See 7.3.18. |
| | | | 1217v01 – 1.3.18.1 | mapPlanIndex | See 7.3.18.1. |
| | | | 1217v01 – 1.3.18.7 | mapPlanMetadataAgency | See 7.3.18.7. |
| 3.5.4.2.1.3.3 | Configure Roadway Geometry Plan Date [Deprecated] | H.2.7 | | | |
| | | | 1217v01 – 1.3.18 | mapPlanTable | See 7.3.18. |
| | | | 1217v01 – 1.3.18.1 | mapPlanIndex | See 7.3.18.1. |
| | | | 1217v01 – 1.3.18.8 | mapPlanMetadataDate | See 7.3.18.8. |
| 3.5.4.2.1.3.4 | Configure Roadway Geometry Plan Geoid [Deprecated] | H.2.7 | | | |
| | | | 1217v01 – 1.3.18 | mapPlanTable | See 7.3.18. |

© 2023 AASHTO / ITE / NEMA Copy Per RTM Distribution Permission

| Requirements Traceability Matrix (RTM) | | | | | |
|---|---|---|---|---|---|
| **FR ID** | **Functional Requirement** | **Dialog ID** | **Object ID** | **Object Name** | **Additional Specifications** |
| | | | 1217v01 – 1.3.18.1 | mapPlanIndex | See 7.3.18.1. |
| | | | 1217v01 – 1.3.18.9 | mapPlanMetadataGeoid | See 7.3.18.9. |
| 3.5.4.2.1.3.5 | Configure Roadway Geometry Plan Layer Type [Deprecated] | H.2.7 | | | |
| | | | 1217v01 – 1.3.18 | mapPlanTable | See 7.3.18. |
| | | | 1217v01 – 1.3.18.1 | mapPlanIndex | See 7.3.18.1. |
| | | | 1217v01 – 1.3.18.4 | mapPlanLayerType | See 7.3.18.4. |
| 3.5.4.2.1.3.6 | Configure Roadway Geometry Plan Layer Identifier [Deprecated] | H.2.7 | | | |
| | | | 1217v01 – 1.3.18 | mapPlanTable | See 7.3.18. |
| | | | 1217v01 – 1.3.18.1 | mapPlanIndex | See 7.3.18.1. |
| | | | 1217v01 – 1.3.18.5 | mapPlanLayerId | See 7.3.18.5. |
| 3.5.4.2.2 | Manage Movement Configuration for Connected Devices Requirements [Deprecated] | | | | |
| 3.5.4.2.2.1 | Configure Lane Connections Requirements [Deprecated] | | | | |
| 3.5.4.2.2.1.1 | Configure Connecting Lane [Deprecated] | 4.2.2 | | | |
| | | | 1217v01 – 1.3.4.1 | mapLaneIndex | See 7.3.4.1. |
| | | | 1217v01 – 1.3.12 | mapLaneConnectTable | See 7.3.12. |


© 2023 AASHTO / ITE / NEMA

| Requirements Traceability Matrix (RTM) | | | | | |
|---|---|---|---|---|---|
| **FR ID** | **Functional Requirement** | **Dialog ID** | **Object ID** | **Object Name** | **Additional Specifications** |
| | | | 1217v01 – 1.3.12.1 | mapLaneConnectIndex | See 7.3.12.1. |
| | | | 1217v01 – 1.3.12.2 | mapLaneConnectId | See 7.3.12.2. |
| 3.5.4.2.2.1.2 | Configure Connecting Maneuver [Deprecated] | H.2.7 | | | |
| | | | 1217v01 – 1.3.4.1 | mapLaneIndex | See 7.3.4.1. |
| | | | 1217v01 – 1.3.12 | mapLaneConnectTable | See 7.3.12. |
| | | | 1217v01 – 1.3.12.1 | mapLaneConnectIndex | See 7.3.12.1. |
| | | | 1217v01 – 1.3.12.3 | mapLaneConnectManeuver | See 7.3.12.3. |
| 3.5.4.2.2.1.3 | Configure Remote Intersection Identifier [Deprecated] | 4.2.2 | | | |
| | | | 1217v01 – 1.3.4.1 | mapLaneIndex | See 7.3.4.1. |
| | | | 1217v01 – 1.3.12 | mapLaneConnectTable | See 7.3.12. |
| | | | 1217v01 – 1.3.12.1 | mapLaneConnectIndex | See 7.3.12.1. |
| | | | 1217v01 – 1.3.12.4 | mapLaneConnectIntersectionId | See 7.3.12.4. |
| | | | 1217v01 – 1.3.12.5 | mapLaneConnectIntersectionAuthority | See 7.3.12.5. |
| 3.5.4.2.2.1.4 | Configure Matching Signal Group [Deprecated] | 4.2.2 | | | |
| | | | 1217v01 – 1.3.4.1 | mapLaneIndex | See 7.3.4.1. |

© 2023 AASHTO / ITE / NEMA Copy Per RTM Distribution Permission

| Requirements Traceability Matrix (RTM) | | | | | |
|---|---|---|---|---|---|
| **FR ID** | **Functional Requirement** | **Dialog ID** | **Object ID** | **Object Name** | **Additional Specifications** |
| | | | 1217v01 – 1.3.12 | mapLaneConnectTable | See 7.3.12. |
| | | | 1217v01 – 1.3.12.1 | mapLaneConnectIndex | See 7.3.12.1. |
| | | | 1217v01 – 1.3.12.6 | mapLaneConnectChannel | See 7.3.12.6. |
| 3.5.4.2.2.2 | Configure Lane Connection Users [Deprecated] | H.2.7 | | | |
| | | | 1217v01 – 1.3.4.1 | mapLaneIndex | See 7.3.4.1. |
| | | | 1217v01 – 1.3.12 | mapLaneConnectTable | See 7.3.12. |
| | | | 1217v01 – 1.3.12.1 | mapLaneConnectIndex | See 7.3.12.1. |
| | | | 1217v01 – 1.3.12.7 | mapLaneConnectClass | See 7.3.12.7. |
| 3.5.4.2.2.3 | Configure Connection Identifier [Deprecated] | 4.2.2 | | | |
| | | | 1217v01 – 1.3.4.1 | mapLaneIndex | See 7.3.4.1. |
| | | | 1217v01 – 1.3.12 | mapLaneConnectTable | See 7.3.12. |
| | | | 1217v01 – 1.3.12.1 | mapLaneConnectIndex | See 7.3.12.1. |
| | | | 1217v01 – 1.3.12.8 | mapLaneConnectManeuverNumber | See 7.3.12.8. |
| 3.5.4.2.2.4 | Configure MAP Plans [Deprecated] | 4.2.2 | | | |
| | | | 1217v01 – 1.3.18 | mapPlanTable | See 7.3.18. |
| | | | 1217v01 – 1.3.18.1 | mapPlanIndex | See 7.3.18.1. |

Copy Per RTM Distribution Permission © 2023 AASHTO / ITE / NEMA

| Requirements Traceability Matrix (RTM) | | | | | |
|---|---|---|---|---|---|
| **FR ID** | **Functional Requirement** | **Dialog ID** | **Object ID** | **Object Name** | **Additional Specifications** |
| | | | 1217v01 – 1.3.18.2 | mapPlanLanes | See 7.3.18.2. |
| | | | 1217v01 – 1.3.18.3 | mapPlanCRC | See 7.3.18.3. |
| 3.5.4.2.2.5 | Determine Maximum Number of Signal Groups Supported [Deprecated] | G.1 | | | |
| | | | 5.9.1 | maxChannels | |
| 3.5.4.2.2.6 | Determine Maximum Number of Lane Connections Supported [Deprecated] | G.1 | | | |
| | | | 1217v01 – 1.3.11 | maxLaneConnects | See 7.3.11. |
| 3.5.4.2.2.7 | Command MAP Plans [Deprecated] | 4.2.11 | | | |
| | | | 5.18.1.4 | mapActivatePlan | |
| | | | 5.18.1.5 | mapActivatePlanError | |
| 3.5.4.2.3 | Manage Collection of Connected Devices Data Requirements [Deprecated] | | | | |
| 3.5.4.2.3.1 | Configure Connected Device Detector Requirements [Deprecated] | | | | |
| 3.5.4.2.3.1.1 | Enable Connected Device Detection [Deprecated] | G.3 | | | |
| | | | 5.18.2.1 | cvDetectionEnable | |
| 3.5.4.2.3.1.2 | Enable Connected Device Detector [Deprecated] | 4.2.7 | | | |
| | | | 5.18.2.2 | maxCvDetectionZones | |
| | | | 5.18.2.3 | ascCvDetectorTable | |
| | | | 5.18.2.3.1 | ascCvDetectorNumber | |
| | | | 5.18.2.3.2 | ascCvDetectorOptions | Bits 0 & 1 |
| | | | 5.18.2.3.4 | ascCvDetectorInput | |
| | | | 5.18.2.3.5 | ascCvDetectorAssignment | |
| | | | 5.18.2.5.1 | detectionZoneNodePointIndex | |

© 2023 AASHTO / ITE / NEMA Copy Per RTM Distribution Permission

| Requirements Traceability Matrix (RTM) | | | | | |
|---|---|---|---|---|---|
| **FR ID** | **Functional Requirement** | **Dialog ID** | **Object ID** | **Object Name** | **Additional Specifications** |
| | | | 1217v01 – 1.3.4.1 | mapLaneIndex | See 7.3.4.1. |
| 3.5.4.2.3.1.3 | Configure Connected Device Detector Reference Point [Deprecated] | H.2.7 | | | |
| | | | 5.18.2.3 | ascCvDetectorTable | |
| | | | 5.18.2.3.1 | ascCvDetectorNumber | |
| | | | 5.18.2.3.3 | ascCvDetectorIntersection | |
| 3.5.4.2.3.1.4 | Configure Connected Device Detector Zone—Geographic [Deprecated] | 4.2.8 | | | |
| | | | 5.18.2.2 | maxCvDetectionZones | |
| | | | 5.18.2.3 | ascCvDetectorTable | |
| | | | 5.18.2.3.1 | ascCvDetectorNumber | |
| | | | 5.18.2.3.2 | ascCvDetectorOptions | Bit 2 |
| | | | 5.18.2.3.4 | ascCvDetectorInput | |
| | | | 5.18.2.5 | detectionZoneNodePointTable | |
| | | | 5.18.2.5.1 | detectionZoneNodePointIndex | |
| | | | 5.18.2.5.2 | detectionZoneNodePointX | |
| | | | 5.18.2.5.3 | detectionZoneNodePointY | |
| | | | 5.18.2.5.4 | detectionZoneNodePointWidth | |
| | | | 5.18.2.5.5 | detectionZoneNodePointZ | |
| | | | 5.18.2.5.6 | detectionZoneNodePointHeight | |
| 3.5.4.2.3.1.5 | Configure Connected Device Detector Zone—Lane [Deprecated] | 4.2.2 | | | |
| | | | 5.18.2.3 | ascCvDetectorTable | |
| | | | 5.18.2.3.1 | ascCvDetectorNumber | |
| | | | 5.18.2.3.2 | ascCvDetectorOptions | Bit 2 |
| | | | 5.18.2.3.4 | ascCvDetectorInput | |

Copy Per RTM Distribution Permission © 2023 AASHTO / ITE / NEMA

| Requirements Traceability Matrix (RTM) | | | | | |
|---|---|---|---|---|---|
| **FR ID** | **Functional Requirement** | **Dialog ID** | **Object ID** | **Object Name** | **Additional Specifications** |
| 3.5.4.2.3.1.6 | Configure Connected Device Data Filters [Deprecated] | H.2.7 | | | |
| | | | 5.18.2.3 | ascCvDetectorTable | |
| | | | 5.18.2.3.1 | ascCvDetectorNumber | |
| | | | 5.18.2.3.2 | ascCvDetectorOptions | Bits 0, 1, 5, and 6 |
| | | | 5.18.2.3.7 | ascCvDetectorUserClass | |
| | | | 5.18.2.3.8 | ascCvDetectorHeading | |
| | | | 5.18.2.3.9 | ascCvDetectorMinSpeed | |
| | | | 5.18.2.3.10 | ascCvDetectorMaxSpeed | |
| | | | 5.18.2.3.11 | ascCvDetectorMinSize | |
| | | | 5.18.2.3.12 | ascCvDetectorMaxSize | |
| | | | 5.18.2.3.13 | ascCvDetectorFlags | |
| 3.5.4.2.3.1.7 | Configure Connected Device Detector Assignments [Deprecated] | H.2.7 | | | |
| | | | 5.18.2.3 | ascCvDetectorTable | |
| | | | 5.18.2.3.1 | ascCvDetectorNumber | |
| | | | 5.18.2.3.5 | ascCvDetectorAssignment | |
| 3.5.4.2.3.1.8 | Determine Maximum Number of Connected Device Detectors Supported [Deprecated] | G.1 | | | |
| | | | 5.18.2.2 | maxCvDetectionZones | |
| 3.5.4.2.3.1.9 | Determine Maximum Number of Connected Device Detectors Node Points Supported [Deprecated] | G.1 | | | |
| | | | 5.18.2.4 | maxDetectionZoneNodePoints | |
| 3.5.4.2.3.2 | Configure Connected Device Detector Output Requirements [Deprecated] | | | | |
| 3.5.4.2.3.2.1 | Configure Connected Device Detector Outputs [Deprecated] | H.2.7 | | | |
| | | | 5.18.2.3 | ascCvDetectorTable | |

© 2023 AASHTO / ITE / NEMA Copy Per RTM Distribution Permission

| Requirements Traceability Matrix (RTM) | | | | | |
|---|---|---|---|---|---|
| **FR ID** | **Functional Requirement** | **Dialog ID** | **Object ID** | **Object Name** | **Additional Specifications** |
| | | | 5.18.2.3.1 | ascCvDetectorNumber | |
| | | | 5.18.2.3.2 | ascCvDetectorOptions | Bit 5, 6 |
| 3.5.4.2.3.2.2 | Configure Actuation Sampling Period [Deprecated] | G.3 | | | |
| | | | 5.18.2.6 | cvDetectionActuationSamplePeriod | |
| 3.5.4.2.3.2.3 | Retrieve Actuation Report [Deprecated] | H.2.5 | | | |
| | | | 5.18.2.7 | maxCvDetectionGroups | |
| | | | 5.18.2.8 | cvDetectionGroupTable | |
| | | | 5.18.2.8.1 | cvDetectionGroupNumber | |
| | | | 5.18.2.8.2 | cvDetectionGroupActuations | |
| 3.5.4.2.3.2.4 | Configure Detection Reports Data [Deprecated] | G.3 | | | |
| | | | 5.18.2.9 | detectionReportCollection | |
| 3.5.4.2.3.2.5 | Configure Detection Report Sampling Period [Deprecated] | H.2.7 | | | |
| | | | 5.18.2.3 | ascCvDetectorTable | |
| | | | 5.18.2.3.1 | ascCvDetectorNumber | |
| | | | 5.18.2.3.6 | ascCvDetectorSamplePeriod | |
| 3.5.4.2.3.2.6 | Retrieve Detection Report [Deprecated] | H.2.5 | | | |
| | | | 5.18.2.10 | activeCvDetectors | |
| | | | 5.18.2.11 | detectionReportSequence | |
| | | | 5.18.2.12 | detectionReportTable | |
| | | | 5.18.2.12.1 | detectionReportTime | |
| | | | 5.18.2.12.2 | detectionReportVolume | |
| | | | 5.18.2.12.3 | detectionReportSpeed | |
| | | | 5.18.2.12.4 | detectionReportTravelTime | |
| | | | 5.18.2.12.5 | detectionReportQueue | |
| | | | 5.18.2.12.6 | detectionReportGap | |

Copy Per RTM Distribution Permission © 2023 AASHTO / ITE / NEMA

| Requirements Traceability Matrix (RTM) | | | | | |
|---|---|---|---|---|---|
| **FR ID** | **Functional Requirement** | **Dialog ID** | **Object ID** | **Object Name** | **Additional Specifications** |
| | | | 5.18.2.12.7 | detectionReportPlatoon | |
| 3.5.4.2.4 | Monitor Broadcasted MAP Messages Requirements [Deprecated] | | | | |
| 3.5.4.2.4.1 | Monitor MAP Data Message Sequence [Deprecated] | G.1 | | | |
| | | | 1217v01 – 1.3.1 | mapMsgCount | See 7.3.1. |
| 3.5.4.2.4.2 | Monitor MAP Data Message Time [Deprecated] | G.1 | | | |
| | | | 1217v01 – 1.3.2 | mapMessageTime | See 7.3.2. |
| 3.5.4.2.4.3 | Monitor MAP Data Message Intersection Sequence [Deprecated] | H.2.6 | | | |
| | | | 1217v01 – 1.3.5 | maxMapIntersections | See 7.3.5. |
| | | | 1217v01 – 1.3.6 | mapIntersectionTable | See 7.3.6. |
| | | | 1217v01 – 1.3.6.1 | mapIntersectionIndex | See 7.3.6.1. |
| | | | 1217v01 – 1.3.6.9 | mapIntersectionMsgCount | See 7.3.6.9. |
| 3.5.4.2.4.4 | Monitor MAP Plan [Deprecated] | G.1 | | | |
| | | | 5.18.1.4 | mapActivatePlan | |
| 3.5.4.2.5 | Monitor Broadcasted SPaT Messages Requirements [Deprecated] | | | | |
| 3.5.4.2.5.1 | Monitor Signal Phase and Timing Message Sequence [Deprecated] | H.2.5 | | | |
| | | | 5.18.1.1 | maxRsuAscs | |
| | | | 5.18.1.2 | rsuAscSpatTable | |
| | | | 5.18.1.2.1 | rsuAscSpatIndex | |

© 2023 AASHTO / ITE / NEMA Copy Per RTM Distribution Permission

| Requirements Traceability Matrix (RTM) | | | | | |
|---|---|---|---|---|---|
| **FR ID** | **Functional Requirement** | **Dialog ID** | **Object ID** | **Object Name** | **Additional Specifications** |
| | | | 5.18.1.2.2 | rsuAscSpatId | |
| | | | 5.18.1.2.3 | rsuAscSpatMsgCount | |
| 3.5.4.2.5.2 | Monitor Signal Phase and Timing Message Timestamp [Deprecated] | G.1 | | | |
| | | | 5.18.1.3 | rsuSpatMinuteOfTheYear | |
| 3.5.4.2.5.3 | Monitor Intersection SPaT Message Timestamp [Deprecated] | H.2.5 | | | |
| | | | 5.18.1.1 | maxRsuAscs | |
| | | | 5.18.1.2 | rsuAscSpatTable | |
| | | | 5.18.1.2.1 | rsuAscSpatIndex | |
| | | | 5.18.1.2.4 | rsuAscSpatMinuteOfTheYear | |
| | | | 5.18.1.2.5 | rsuAscSpatMilliseconds | |
| 3.5.4.2.5.4 | Monitor Enabled Lanes [Deprecated] | H.2.6 | | | |
| | | | 5.18.1.1 | maxRsuAscs | |
| | | | 5.18.1.2 | rsuAscSpatTable | |
| | | | 5.18.1.2.1 | rsuAscSpatIndex | |
| | | | 5.18.1.2.6 | rsuAscSpatEnabledLanes | |
| 3.5.4.3 | ASC – CV Roadside Process Interface Requirements | | | | |
| 3.5.4.3.1 | Exchange Current and Next Movement Information Requirements | | | | |
| 3.5.4.3.1.1 | Provide Current and Next Movement Information Requirements | | | | |
| 3.5.4.3.1.1.1 | Provide Intersection Identifier [Deprecated] | H.2.7 | | | |
| | | | 1217v01 – 1.3.6 | mapIntersectionTable | See 7.3.6. |
| | | | 1217v01 – 1.3.6.1 | mapIntersectionIndex | See 7.3.6.1. |

Copy Per RTM Distribution Permission © 2023 AASHTO / ITE / NEMA

| Requirements Traceability Matrix (RTM) | | | | | |
|---|---|---|---|---|---|
| **FR ID** | **Functional Requirement** | **Dialog ID** | **Object ID** | **Object Name** | **Additional Specifications** |
| | | | 1217v01 – 1.3.6.2 | mapIntersectionId | See 7.3.6.2. |
| | | | 1217v01 – 1.3.6.4 | mapIntersectionAuthority | See 7.3.6.4. |
| 3.5.4.3.1.1.2 | Provide Signal Phase and Timing Intersection Status [Deprecated] | G.3 | | | |
| | | | 1217v01 – 1.2.1 | spatStatus | See 7.2.1. |
| 3.5.4.3.1.1.3 | Provide Movement Status Requirements | | | | |
| 3.5.4.3.1.1.3.1 | Provide Movement Time Point [Deprecated] | G.3 | | | |
| | | | 5.17.6 | ascCurrentTick | |
| 3.5.4.3.1.1.3.2 | Provide Movement State [Deprecated] | H.2.7 | | | |
| | | | 5.9.2.1 | channelNumber | |
| | | | 1217v01 – 1.2.7 | signalStatusTable | See 7.2.7. |
| | | | 1217v01 – 1.2.7.1 | signalState | See 7.2.7.1. |
| 3.5.4.3.1.1.3.3 | Provide Movement Minimum End Time [Deprecated] | H.2.7 | | | |
| | | | 5.9.2.1 | channelNumber | |
| | | | 1217v01 – 1.2.7 | signalStatusTable | See 7.2.7. |
| | | | 1217v01 – 1.2.7.2 | signalStateMinEndTick | See 7.2.7.2. |
| 3.5.4.3.1.1.3.4 | Provide Movement Maximum End Time [Deprecated] | H.2.7 | | | |
| | | | 5.9.2.1 | channelNumber | |
| | | | 1217v01 – 1.2.7 | signalStatusTable | See 7.2.7. |

© 2023 AASHTO / ITE / NEMA Copy Per RTM Distribution Permission

| Requirements Traceability Matrix (RTM) | | | | | |
|---|---|---|---|---|---|
| **FR ID** | **Functional Requirement** | **Dialog ID** | **Object ID** | **Object Name** | **Additional Specifications** |
| | | | 1217v01 – 1.2.7.3 | signalStateMaxEndTick | See 7.2.7.3. |
| 3.5.4.3.1.1.3.5 | Provide Movement Likely End Time [Deprecated] | H.2.7 | | | |
| | | | 5.9.2.1 | channelNumber | |
| | | | 1217v01 – 1.2.7 | signalStatusTable | See 7.2.7. |
| | | | 1217v01 – 1.2.7.4 | signalStateLikelyEndTick | See 7.2.7.4. |
| 3.5.4.3.1.1.3.6 | Provide Movement Likely End Time Confidence [Deprecated] | H.2.7 | | | |
| | | | 5.9.2.1 | channelNumber | |
| | | | 1217v01 – 1.2.7 | signalStatusTable | See 7.2.7. |
| | | | 1217v01 – 1.2.7.5 | signalStateTickConfidence | See 7.2.7.5. |
| 3.5.4.3.1.1.3.7 | Provide Movement Next Occurrence [Deprecated] | H.2.7 | | | |
| | | | 5.9.2.1 | channelNumber | |
| | | | 1217v01 – 1.2.7 | signalStatusTable | See 7.2.7. |
| | | | 1217v01 – 1.2.7.6 | signalNextTick | See 7.2.7.6. |
| 3.5.4.3.1.1.3.8 | Provide Movement Status [Deprecated] | G.1 | | | |
| | | | 1217v01 – 1.2.8 | signalStatusBlock | See 7.2.8. |
| 3.5.4.3.1.1.3.9 | Provide Movement Time Point V2 | G.3 | | | |
| | | | 1218v01A – 5.22.1 | rsuAscCurrentTick | Proposed |
| 3.5.4.3.1.1.3.10 | Provide Movement State V2 | H.2.7 | | | |


© 2023 AASHTO / ITE / NEMA

| Requirements Traceability Matrix (RTM) | | | | | |
|---|---|---|---|---|---|
| **FR ID** | **Functional Requirement** | **Dialog ID** | **Object ID** | **Object Name** | **Additional Specifications** |
| | | | 1218v01A – 5.22.2 | maxRsuSignalGroups | Proposed |
| | | | 1218v01A – 5.22.3 | maxRsuMovementEvents | Proposed |
| | | | 1218v01A – 5.22.4 | rsuSignalStatusTable | Proposed |
| | | | 1218v01A – 5.22.4.1 | rsuSignalGroupEntryNumber | Proposed |
| | | | 1218v01A – 5.22.4.2 | rsuMovementIndex | Row = 1, Proposed |
| | | | 1218v01A – 5.22.4.3 | rsuSignalGroupIntersection | Proposed |
| | | | 1218v01A – 5.22.4.4 | rsuSignalGroupID | Proposed |
| | | | 1218v01A – 5.22.4.5 | rsuSignalState | Proposed |
| 3.5.4.3.1.1.3.11 | Provide Movement Minimum End Time V2 | H.2.7 | | | |
| | | | 1218v01A – 5.22.2 | maxRsuSignalGroups | Proposed |
| | | | 1218v01A – 5.22.3 | maxRsuMovementEvents | Proposed |
| | | | 1218v01A – 5.22.4 | rsuSignalStatusTable | Proposed |
| | | | 1218v01A – 5.22.4.1 | rsuSignalGroupEntryNumber | Proposed |
| | | | 1218v01A – 5.22.4.2 | rsuMovementIndex | Row = 1, Proposed |
| | | | 1218v01A – 5.22.4.3 | rsuSignalGroupIntersection | Proposed |

© 2023 AASHTO / ITE / NEMA Copy Per RTM Distribution Permission

| Requirements Traceability Matrix (RTM) | | | | | |
|---|---|---|---|---|---|
| **FR ID** | **Functional Requirement** | **Dialog ID** | **Object ID** | **Object Name** | **Additional Specifications** |
| | | | 1218v01A – 5.22.4.4 | rsuSignalGroupID | Proposed |
| | | | 1218v01A – 5.22.4.6 | rsuSignalStateMinEndTick | Proposed |
| 3.5.4.3.1.1.3.12 | Provide Movement Maximum End Time V2 | H.2.7 | | | |
| | | | 1218v01A – 5.22.2 | maxRsuSignalGroups | Proposed |
| | | | 1218v01A – 5.22.3 | maxRsuMovementEvents | Proposed |
| | | | 1218v01A – 5.22.4 | rsuSignalStatusTable | Proposed |
| | | | 1218v01A – 5.22.4.1 | rsuSignalGroupEntryNumber | Proposed |
| | | | 1218v01A – 5.22.4.2 | rsuMovementIndex | Row = 1, Proposed |
| | | | 1218v01A – 5.22.4.3 | rsuSignalGroupIntersection | Proposed |
| | | | 1218v01A – 5.22.4.4 | rsuSignalGroupID | Proposed |
| | | | 1218v01A – 5.22.4.7 | rsuSignalStateMaxEndTick | Proposed |
| 3.5.4.3.1.1.3.13 | Provide Movement Likely End Time V2 | H.2.7 | | | |
| | | | 1218v01A – 5.22.2 | maxRsuSignalGroups | Proposed |
| | | | 1218v01A – 5.22.3 | maxRsuMovementEvents | Proposed |
| | | | 1218v01A – 5.22.4 | rsuSignalStatusTable | Proposed |

Copy Per RTM Distribution Permission © 2023 AASHTO / ITE / NEMA

| Requirements Traceability Matrix (RTM) | | | | | |
|---|---|---|---|---|---|
| **FR ID** | **Functional Requirement** | **Dialog ID** | **Object ID** | **Object Name** | **Additional Specifications** |
| | | | 1218v01A – 5.22.4.1 | rsuSignalGroupEntryNumber | Proposed |
| | | | 1218v01A – 5.22.4.2 | rsuMovementIndex | Row = 1, Proposed |
| | | | 1218v01A – 5.22.4.3 | rsuSignalGroupIntersection | Proposed |
| | | | 1218v01A – 5.22.4.4 | rsuSignalGroupID | Proposed |
| | | | 1218v01A – 5.22.4.8 | rsuSignalStateLikelyEndTick | Proposed |
| 3.5.4.3.1.1.3.14 | Provide Movement Likely End Time Confidence V2 | H.2.7 | | | |
| | | | 1218v01A – 5.22.2 | maxRsuSignalGroups | Proposed |
| | | | 1218v01A – 5.22.3 | maxRsuMovementEvents | Proposed |
| | | | 1218v01A – 5.22.4 | rsuSignalStatusTable | Proposed |
| | | | 1218v01A – 5.22.4.1 | rsuSignalGroupEntryNumber | Proposed |
| | | | 1218v01A – 5.22.4.2 | rsuMovementIndex | Row = 1, Proposed |
| | | | 1218v01A – 5.22.4.3 | rsuSignalGroupIntersection | Proposed |
| | | | 1218v01A – 5.22.4.4 | rsuSignalGroupID | Proposed |
| | | | 1218v01A – 5.22.4.9 | rsuSignalStateTickConfidence | Proposed |
| 3.5.4.3.1.1.3.15 | Provide Movement Next Occurrence V2 | H.2.7 | | | |

© 2023 AASHTO / ITE / NEMA Copy Per RTM Distribution Permission

| Requirements Traceability Matrix (RTM) | | | | | |
|---|---|---|---|---|---|
| **FR ID** | **Functional Requirement** | **Dialog ID** | **Object ID** | **Object Name** | **Additional Specifications** |
| | | | 1218v01A – 5.22.2 | maxRsuSignalGroups | Proposed |
| | | | 1218v01A – 5.22.3 | maxRsuMovementEvents | Proposed |
| | | | 1218v01A – 5.22.4 | rsuSignalStatusTable | Proposed |
| | | | 1218v01A – 5.22.4.1 | rsuSignalGroupEntryNumber | Proposed |
| | | | 1218v01A – 5.22.4.2 | rsuMovementIndex | Row = 1, Proposed |
| | | | 1218v01A – 5.22.4.3 | rsuSignalGroupIntersection | Proposed |
| | | | 1218v01A – 5.22.4.4 | rsuSignalGroupID | Proposed |
| | | | 1218v01A – 5.22.4.10 | rsuSignalStateNextTick | Proposed |
| 3.5.4.3.1.1.3.16 | Provide Next Movement State | H.2.7 | | | |
| | | | 1218v01A – 5.22.2 | maxRsuSignalGroups | Proposed |
| | | | 1218v01A – 5.22.3 | maxRsuMovementEvents | Proposed |
| | | | 1218v01A – 5.22.4 | rsuSignalStatusTable | Proposed |
| | | | 1218v01A – 5.22.4.1 | rsuSignalGroupEntryNumber | Proposed |
| | | | 1218v01A – 5.22.4.2 | rsuMovementIndex | Row = 2, Proposed |
| | | | 1218v01A – 5.22.4.3 | rsuSignalGroupIntersection | Proposed |

Copy Per RTM Distribution Permission © 2023 AASHTO / ITE / NEMA

| Requirements Traceability Matrix (RTM) | | | | | |
|---|---|---|---|---|---|
| **FR ID** | **Functional Requirement** | **Dialog ID** | **Object ID** | **Object Name** | **Additional Specifications** |
| | | | 1218v01A – 5.22.4.4 | rsuSignalGroupID | Proposed |
| | | | 1218v01A – 5.22.4.5 | rsuSignalState | Proposed |
| 3.5.4.3.1.1.3.17 | Provide Next Movement Minimum End Time | H.2.7 | | | |
| | | | 1218v01A – 5.22.2 | maxRsuSignalGroups | Proposed |
| | | | 1218v01A – 5.22.3 | maxRsuMovementEvents | Proposed |
| | | | 1218v01A – 5.22.4 | rsuSignalStatusTable | Proposed |
| | | | 1218v01A – 5.22.4.1 | rsuSignalGroupEntryNumber | Proposed |
| | | | 1218v01A – 5.22.4.2 | rsuMovementIndex | Row = 2, Proposed |
| | | | 1218v01A – 5.22.4.3 | rsuSignalGroupIntersection | Proposed |
| | | | 1218v01A – 5.22.4.4 | rsuSignalGroupID | Proposed |
| | | | 1218v01A – 5.22.4.6 | rsuSignalStateMinEndTick | Proposed |
| 3.5.4.3.1.1.3.18 | Provide Next Movement Maximum End Time | H.2.7 | | | |
| | | | 1218v01A – 5.22.2 | maxRsuSignalGroups | Proposed |
| | | | 1218v01A – 5.22.3 | maxRsuMovementEvents | Proposed |
| | | | 1218v01A – 5.22.4 | rsuSignalStatusTable | Proposed |

© 2023 AASHTO / ITE / NEMA Copy Per RTM Distribution Permission

| Requirements Traceability Matrix (RTM) | | | | | |
|---|---|---|---|---|---|
| **FR ID** | **Functional Requirement** | **Dialog ID** | **Object ID** | **Object Name** | **Additional Specifications** |
| | | | 1218v01A – 5.22.4.1 | rsuSignalGroupEntryNumber | Proposed |
| | | | 1218v01A – 5.22.4.2 | rsuMovementIndex | Row = 2, Proposed |
| | | | 1218v01A – 5.22.4.3 | rsuSignalGroupIntersection | Proposed |
| | | | 1218v01A – 5.22.4.4 | rsuSignalGroupID | Proposed |
| | | | 1218v01A – 5.22.4.7 | rsuSignalStateMaxEndTick | Proposed |
| 3.5.4.3.1.1.3.19 | Provide Next Movement Start Time | H.2.7 | | | |
| | | | 1218v01A – 5.22.2 | maxRsuSignalGroups | Proposed |
| | | | 1218v01A – 5.22.3 | maxRsuMovementEvents | Proposed |
| | | | 1218v01A – 5.22.4 | rsuSignalStatusTable | Proposed |
| | | | 1218v01A – 5.22.4.1 | rsuSignalGroupEntryNumber | Proposed |
| | | | 1218v01A – 5.22.4.2 | rsuMovementIndex | Row = 2, Proposed |
| | | | 1218v01A – 5.22.4.3 | rsuSignalGroupIntersection | Proposed |
| | | | 1218v01A – 5.22.4.4 | rsuSignalGroupID | Proposed |
| | | | 1218v01A – 5.22.4.11 | rsuSignalStateStartTick | Proposed |
| 3.5.4.3.1.1.4 | Provide Movement Assistance Requirements | | | | |
| 3.5.4.3.1.1.4.1 | Provide Lane Connection Queue Length [Deprecated] | H.2.7 | | | |

Copy Per RTM Distribution Permission
© 2023 AASHTO / ITE / NEMA

| Requirements Traceability Matrix (RTM) | | | | | |
|---|---|---|---|---|---|
| **FR ID** | **Functional Requirement** | **Dialog ID** | **Object ID** | **Object Name** | **Additional Specifications** |
| | | | 5.9.2.1 | channelNumber | |
| | | | 1217v01 – 1.2.5 | movementManeuverTable | See 7.2.5. |
| | | | 1217v01 – 1.2.5.1 | movementManeuverIndex | See 7.2.5.1. |
| | | | 1217v01 – 1.2.5.4 | movementManeuverQueue | See 7.2.5.4. |
| 3.5.4.3.1.1.4.2 | Provide Lane Connection Available Storage Length [Deprecated] | H.2.7 | | | |
| | | | 5.9.2.1 | channelNumber | |
| | | | 1217v01 – 1.2.5 | movementManeuverTable | See 7.2.5. |
| | | | 1217v01 – 1.2.5.1 | movementManeuverIndex | See 7.2.5.1. |
| | | | 1217v01 – 1.2.5.5 | movementManeuverStorage | See 7.2.5.5. |
| 3.5.4.3.1.1.4.3 | Provide Lane Connection Stop Line Wait [Deprecated] | H.2.7 | | | |
| | | | 5.9.2.1 | channelNumber | |
| | | | 1217v01 – 1.2.5 | movementManeuverTable | See 7.2.5. |
| | | | 1217v01 – 1.2.5.1 | movementManeuverIndex | See 7.2.5.1. |
| | | | 1217v01 – 1.2.5.6 | movementManeuverStatus | See 7.2.5.6. |
| 3.5.4.3.1.1.4.4 | Provide Lane Connection Traveler Detection [Deprecated] | H.2.7 | | | |
| | | | 5.9.2.1 | channelNumber | |
| | | | 1217v01 – 1.2.5 | movementManeuverTable | See 7.2.5. |

© 2023 AASHTO / ITE / NEMA
Copy Per RTM Distribution Permission

| Requirements Traceability Matrix (RTM) | | | | | |
|---|---|---|---|---|---|
| **FR ID** | **Functional Requirement** | **Dialog ID** | **Object ID** | **Object Name** | **Additional Specifications** |
| | | | 1217v01 – 1.2.5.1 | movementManeuverIndex | See 7.2.5.1. |
| | | | 1217v01 – 1.2.5.6 | movementManeuverStatus | See 7.2.5.6. |
| 3.5.4.3.1.1.4.5 | Provide Lane Connection State [Deprecated] | H.2.7 | | | |
| | | | 5.9.2.1 | channelNumber | |
| | | | 1217v01 – 1.2.5 | movementManeuverTable | See 7.2.5. |
| | | | 1217v01 – 1.2.5.1 | movementManeuverIndex | See 7.2.5.1. |
| | | | 1217v01 – 1.2.5.3 | movementManeuverState | See 7.2.5.3. |
| 3.5.4.3.1.1.4.6 | Provide Lane Connection Status [Deprecated] | G.1 | | | |
| | | | 1217v01 – 1.2.9 | movementManeuverStatusBlock | See 7.2.9. |
| 3.5.4.3.1.1.4.7 | Provide Lane Connection Queue Length V2 | H.2.7 | | | |
| | | | 1218v01A – 5.22.5 | maxRsuMovementManeuvers | Proposed |
| | | | 1218v01A – 5.22.6 | rsuMovementManeuverTable | Proposed |
| | | | 1218v01A – 5.22.6.1 | rsuMovementManeuverIndex | Proposed |
| | | | 1218v01A – 5.22.6.2 | rsuMovementManeuverIntersection | Proposed |
| | | | 1218v01A – 5.22.6.3 | rsuMovementManeuverSignalGroupID | Proposed |
| | | | 1218v01A – 5.22.6.4 | rsuMovementManeuverQueue | Proposed |
| 3.5.4.3.1.1.4.8 | Provide Lane Connection Traveler Detection V2 | H.2.7 | | | |

Copy Per RTM Distribution Permission
© 2023 AASHTO / ITE / NEMA

| Requirements Traceability Matrix (RTM) | | | | | |
|---|---|---|---|---|---|
| **FR ID** | **Functional Requirement** | **Dialog ID** | **Object ID** | **Object Name** | **Additional Specifications** |
| | | | 1218v01A – 5.22.5 | maxRsuMovementManeuvers | Proposed |
| | | | 1218v01A – 5.22.6 | rsuMovementManeuverTable | Proposed |
| | | | 1218v01A – 5.22.6.1 | rsuMovementManeuverIndex | Proposed |
| | | | 1218v01A – 5.22.6.2 | rsuMovementManeuverIntersection | Proposed |
| | | | 1218v01A – 5.22.6.3 | rsuMovementManeuverSignalGroupID | Proposed |
| | | | 1218v01A – 5.22.6.5 | rsuMovementManeuverStatus | Bit = 1, Proposed |
| 3.5.4.3.1.1.5 | Provide Advisory Speed Requirements | | | | |
| 3.5.4.3.1.1.5.1 | Provide Advisory Speed Type [Deprecated] | H.2.7 | | | |
| | | | 5.9.2 | channelTable | |
| | | | 5.9.2.1 | channelNumber | |
| | | | 1217v01 – 1.2.3 | advisorySpeedTable | See 7.2.3. |
| | | | 1217v01 – 1.2.3.1 | advisorySpeedIndex | See 7.2.3.1. |
| | | | 1217v01 – 1.2.3.2 | advisorySpeedType | See 7.2.3.2. |
| 3.5.4.3.1.1.5.2 | Provide Advisory Speed [Deprecated] | H.2.7 | | | |
| | | | 5.9.2 | channelTable | |
| | | | 5.9.2.1 | channelNumber | |
| | | | 1217v01 – 1.2.3 | advisorySpeedTable | See 7.2.3. |
| | | | 1217v01 – 1.2.3.1 | advisorySpeedIndex | See 7.2.3.1. |

© 2023 AASHTO / ITE / NEMA Copy Per RTM Distribution Permission

| Requirements Traceability Matrix (RTM) | | | | | |
|---|---|---|---|---|---|
| **FR ID** | **Functional Requirement** | **Dialog ID** | **Object ID** | **Object Name** | **Additional Specifications** |
| | | | 1217v01 – 1.2.3.3 | advisorySpeedAdvice | See 7.2.3.3. |
| 3.5.4.3.1.1.5.3 | Provide Advisory Speed Zone [Deprecated] | H.2.7 | | | |
| | | | 5.9.2 | channelTable | |
| | | | 5.9.2.1 | channelNumber | |
| | | | 1217v01 – 1.2.3 | advisorySpeedTable | See 7.2.3. |
| | | | 1217v01 – 1.2.3.1 | advisorySpeedIndex | See 7.2.3.1. |
| | | | 1217v01 – 1.2.3.4 | advisorySpeedZoneLength | See 7.2.3.4. |
| 3.5.4.3.1.1.5.4 | Provide Advisory Speed Vehicle Type [Deprecated] | H.2.7 | | | |
| | | | 5.9.2 | channelTable | |
| | | | 5.9.2.1 | channelNumber | |
| | | | 1217v01 – 1.2.3 | advisorySpeedTable | See 7.2.3. |
| | | | 1217v01 – 1.2.3.1 | advisorySpeedIndex | See 7.2.3.1. |
| | | | 1217v01 – 1.2.3.5 | advisorySpeedClass | See 7.2.3.5. |
| 3.5.4.3.1.1.5.5 | Provide Advisory Speed Confidence Level [Deprecated] | H.2.7 | | | |
| | | | 1217v01 – 1.2.3 | advisorySpeedTable | See 7.2.3. |
| | | | 1217v01 – 1.2.3.1 | advisorySpeedIndex | See 7.2.3.1. |
| | | | 1217v01 – 1.2.3.6 | advisorySpeedConfidence | See 7.2.3.6. |
| 3.5.4.3.1.1.5.6 | Provide Advisory Speed Type V2 | H.2.7 | | | |

Copy Per RTM Distribution Permission © 2023 AASHTO / ITE / NEMA

| Requirements Traceability Matrix (RTM) | | | | | |
|---|---|---|---|---|---|
| **FR ID** | **Functional Requirement** | **Dialog ID** | **Object ID** | **Object Name** | **Additional Specifications** |
| | | | 1218v01A – 5.22.7 | maxRsuAdvisorySpeeds | Proposed |
| | | | 1218v01A – 5.22.8 | rsuAdvisorySpeedTable | Proposed |
| | | | 1218v01A – 5.22.8.1 | rsuAdvisorySpeedIndex | Proposed |
| | | | 1218v01A – 5.22.8.2 | rsuAdvisorySpeedIntersection | Proposed |
| | | | 1218v01A – 5.22.8.3 | rsuAdvisorySpeedSignalGroupID | Proposed |
| | | | 1218v01A – 5.22.8.4 | rsuAdvisorySpeedType | Proposed |
| 3.5.4.3.1.1.5.7 | Provide Advisory Speed V2 | H.2.7 | | | |
| | | | 1218v01A – 5.22.7 | maxRsuAdvisorySpeeds | Proposed |
| | | | 1218v01A – 5.22.8 | rsuAdvisorySpeedTable | Proposed |
| | | | 1218v01A – 5.22.8.1 | rsuAdvisorySpeedIndex | Proposed |
| | | | 1218v01A – 5.22.8.2 | rsuAdvisorySpeedIntersection | Proposed |
| | | | 1218v01A – 5.22.8.3 | rsuAdvisorySpeedSignalGroupID | Proposed |
| | | | 1218v01A – 5.22.8.5 | rsuAdvisorySpeedAdvice | Proposed |
| 3.5.4.3.1.1.5.8 | Provide Advisory Speed Zone V2 | H.2.7 | | | |
| | | | 1218v01A – 5.22.7 | maxRsuAdvisorySpeeds | Proposed |
| | | | 1218v01A – 5.22.8 | rsuAdvisorySpeedTable | Proposed |

© 2023 AASHTO / ITE / NEMA Copy Per RTM Distribution Permission

| Requirements Traceability Matrix (RTM) | | | | | |
|---|---|---|---|---|---|
| **FR ID** | **Functional Requirement** | **Dialog ID** | **Object ID** | **Object Name** | **Additional Specifications** |
| | | | 1218v01A – 5.22.8.1 | rsuAdvisorySpeedIndex | Proposed |
| | | | 1218v01A – 5.22.8.2 | rsuAdvisorySpeedIntersection | Proposed |
| | | | 1218v01A – 5.22.8.3 | rsuAdvisorySpeedSignalGroupID | Proposed |
| | | | 1218v01A – 5.22.8.6 | rsuAdvisorySpeedZoneLength | Proposed |
| 3.5.4.3.1.1.5.9 | Provide Advisory Speed Vehicle Type V2 | H.2.7 | | | |
| | | | 1218v01A – 5.22.7 | maxRsuAdvisorySpeeds | Proposed |
| | | | 1218v01A – 5.22.8 | rsuAdvisorySpeedTable | Proposed |
| | | | 1218v01A – 5.22.8.1 | rsuAdvisorySpeedIndex | Proposed |
| | | | 1218v01A – 5.22.8.2 | rsuAdvisorySpeedIntersection | Proposed |
| | | | 1218v01A – 5.22.8.3 | rsuAdvisorySpeedSignalGroupID | Proposed |
| | | | 1218v01A – 5.22.8.7 | rsuAdvisorySpeedZoneClass | Proposed |
| 3.5.4.3.1.1.6 | Provide Intersection Channel Assignment [Deprecated] | H.2.7 | | | |
| | | | 5.9.2 | channelTable | |
| | | | 5.9.2.1 | channelNumber | |
| | | | 5.9.2.8 | channelIntersectionId | |
| 3.5.4.3.1.1.7 | Provide Road Authority ID | G.3 | | | |
| | | | 1218v01A – 5.22.10 | rsuSpatRoadAuthorityID | Proposed |
| 3.5.4.3.1.1.8 | Provide Signal Phase and Timing Intersection Status V2 | G.3 | | | |

Copy Per RTM Distribution Permission
© 2023 AASHTO / ITE / NEMA

| Requirements Traceability Matrix (RTM) | | | | | |
|---|---|---|---|---|---|
| **FR ID** | **Functional Requirement** | **Dialog ID** | **Object ID** | **Object Name** | **Additional Specifications** |
| | | | 1218v01A – 5.22.9 | rsuSpatStatus | Proposed |
| 3.5.4.3.1.1.9 | Provide SPaT Information to a CV Roadside Process | G.3 | | | |
| | | | 1218v01A – 5.22.12 | rsuSignalStatusBlock | Proposed |
| 3.5.4.3.1.2 | Retrieve Current and Next Movement Information Requirements [Deprecated] | | | | |
| 3.5.4.3.1.2.1 | Retrieve Intersection Identifier [Deprecated] | H.2.5 | | | |
| | | | 1217v01 – 1.3.6 | mapIntersectionTable | See 7.3.6. |
| | | | 1217v01 – 1.3.6.1 | mapIntersectionIndex | See 7.3.6.1. |
| | | | 1217v01 – 1.3.6.2 | mapIntersectionId | See 7.3.6.2. |
| | | | 1217v01 – 1.3.6.4 | mapIntersectionAuthority | See 7.3.6.4. |
| 3.5.4.3.1.2.2 | Retrieve Signal Phase and Timing Intersection Status [Deprecated] | G.1 | | | |
| | | | 1217v01 – 1.2.1 | spatStatus | See 7.2.1. |
| 3.5.4.3.1.2.3 | Retrieve Movement Status Requirements [Deprecated] | | | | |
| 3.5.4.3.1.2.3.1 | Retrieve Movement Time Point [Deprecated] | G.1 | | | |
| | | | 5.17.6 | ascCurrentTick | |
| 3.5.4.3.1.2.3.2 | Retrieve Movement Time Point—Milliseconds [Deprecated] | G.1 | | | |
| | | | 5.17.6 | ascCurrentTick | |
| | | | 5.17.7 | ascCurrentTickMsOffset | |
| 3.5.4.3.1.2.3.3 | Retrieve Movement State [Deprecated] | H.2.5 | | | |

© 2023 AASHTO / ITE / NEMA Copy Per RTM Distribution Permission

| Requirements Traceability Matrix (RTM) | | | | | |
|---|---|---|---|---|---|
| **FR ID** | **Functional Requirement** | **Dialog ID** | **Object ID** | **Object Name** | **Additional Specifications** |
| | | | 5.9.1 | maxChannels | |
| | | | 5.9.2.1 | channelNumber | |
| | | | 1217v01 – 1.2.7 | signalStatusTable | See 7.2.7. |
| | | | 1217v01 – 1.2.7.1 | signalState | See 7.2.7.1. |
| 3.5.4.3.1.2.3.4 | Retrieve Movement Minimum End Time [Deprecated] | H.2.5 | | | |
| | | | 5.9.1 | maxChannels | |
| | | | 5.9.2.1 | channelNumber | |
| | | | 1217v01 – 1.2.7 | signalStatusTable | See 7.2.7. |
| | | | 1217v01 – 1.2.7.2 | signalStateMinEndTick | See 7.2.7.2. |
| 3.5.4.3.1.2.3.5 | Retrieve Movement Maximum End Time [Deprecated] | H.2.5 | | | |
| | | | 5.9.1 | maxChannels | |
| | | | 5.9.2.1 | channelNumber | |
| | | | 1217v01 – 1.2.7 | signalStatusTable | See 7.2.7. |
| | | | 1217v01 – 1.2.7.3 | signalStateMaxEndTick | See 7.2.7.3. |
| 3.5.4.3.1.2.3.6 | Retrieve Movement Likely End Time [Deprecated] | H.2.5 | | | |
| | | | 5.9.1 | maxChannels | |
| | | | 5.9.2.1 | channelNumber | |
| | | | 1217v01 – 1.2.7 | signalStatusTable | See 7.2.7. |
| | | | 1217v01 – 1.2.7.4 | signalStateLikelyEndTick | See 7.2.7.4. |

Copy Per RTM Distribution Permission © 2023 AASHTO / ITE / NEMA

| Requirements Traceability Matrix (RTM) | | | | | |
|---|---|---|---|---|---|
| **FR ID** | **Functional Requirement** | **Dialog ID** | **Object ID** | **Object Name** | **Additional Specifications** |
| 3.5.4.3.1.2.3.7 | Retrieve Movement Likely End Time Confidence [Deprecated] | H.2.5 | | | |
| | | | 5.9.1 | maxChannels | |
| | | | 5.9.2.1 | channelNumber | |
| | | | 1217v01 – 1.2.7 | signalStatusTable | See 7.2.7. |
| | | | 1217v01 – 1.2.7.5 | signalStateTickConfidence | See 7.2.7.5. |
| 3.5.4.3.1.2.3.8 | Retrieve Movement Next Occurrence [Deprecated] | H.2.5 | | | |
| | | | 5.9.1 | maxChannels | |
| | | | 5.9.2.1 | channelNumber | |
| | | | 1217v01 – 1.2.7 | signalStatusTable | See 7.2.7. |
| | | | 1217v01 – 1.2.7.6 | signalNextTick | See 7.2.7.6. |
| 3.5.4.3.1.2.3.9 | Retrieve Movement Status [Deprecated] | G.1 | | | |
| | | | 1217v01 – 1.2.8 | signalStatusBlock | See 7.2.8. |
| 3.5.4.3.1.2.4 | Retrieve Movement Assistance Requirements [Deprecated] | | | | |
| 3.5.4.3.1.2.4.1 | Retrieve Lane Connection Queue Length [Deprecated] | H.2.5 | | | |
| | | | 5.9.2.1 | channelNumber | |
| | | | 1217v01 – 1.2.4 | maxMovementManeuvers | See 7.2.4. |
| | | | 1217v01 – 1.2.5 | movementManeuverTable | See 7.2.5. |
| | | | 1217v01 – 1.2.5.1 | movementManeuverIndex | See 7.2.5.1. |

© 2023 AASHTO / ITE / NEMA Copy Per RTM Distribution Permission

| Requirements Traceability Matrix (RTM) | | | | | |
|---|---|---|---|---|---|
| **FR ID** | **Functional Requirement** | **Dialog ID** | **Object ID** | **Object Name** | **Additional Specifications** |
| | | | 1217v01 – 1.2.5.4 | movementManeuverQueue | See 7.2.5.4. |
| 3.5.4.3.1.2.4.2 | Retrieve Lane Connection Available Storage Length [Deprecated] | H.2.5 | | | |
| | | | 5.9.2.1 | channelNumber | |
| | | | 1217v01 – 1.2.4 | maxMovementManeuvers | See 7.2.4. |
| | | | 1217v01 – 1.2.5 | movementManeuverTable | See 7.2.5. |
| | | | 1217v01 – 1.2.5.1 | movementManeuverIndex | See 7.2.5.1. |
| | | | 1217v01 – 1.2.5.5 | movementManeuverStorage | See 7.2.5.5. |
| 3.5.4.3.1.2.4.3 | Retrieve Lane Connection Stop Line Wait [Deprecated] | H.2.5 | | | |
| | | | 5.9.2.1 | channelNumber | |
| | | | 1217v01 – 1.2.4 | maxMovementManeuvers | See 7.2.4. |
| | | | 1217v01 – 1.2.5 | movementManeuverTable | See 7.2.5. |
| | | | 1217v01 – 1.2.5.1 | movementManeuverIndex | See 7.2.5.1. |
| | | | 1217v01 – 1.2.5.6 | movementManeuverStatus | See 7.2.5.6. |
| 3.5.4.3.1.2.4.4 | Retrieve Lane Connection Traveler Detection [Deprecated] | H.2.5 | | | |
| | | | 5.9.2.1 | channelNumber | |
| | | | 1217v01 – 1.2.4 | maxMovementManeuvers | See 7.2.4. |
| | | | 1217v01 – 1.2.5 | movementManeuverTable | See 7.2.5. |

Copy Per RTM Distribution Permission
© 2023 AASHTO / ITE / NEMA

| Requirements Traceability Matrix (RTM) | | | | | |
|---|---|---|---|---|---|
| **FR ID** | **Functional Requirement** | **Dialog ID** | **Object ID** | **Object Name** | **Additional Specifications** |
| | | | 1217v01 – 1.2.5.1 | movementManeuverIndex | See 7.2.5.1. |
| | | | 1217v01 – 1.2.5.6 | movementManeuverStatus | See 7.2.5.6. |
| 3.5.4.3.1.2.4.5 | Retrieve Lane Connection State [Deprecated] | H.2.5 | | | |
| | | | 5.9.2.1 | channelNumber | |
| | | | 1217v01 – 1.2.4 | maxMovementManeuvers | See 7.2.4. |
| | | | 1217v01 – 1.2.5 | movementManeuverTable | See 7.2.5. |
| | | | 1217v01 – 1.2.5.1 | movementManeuverIndex | See 7.2.5.1. |
| | | | 1217v01 – 1.2.5.3 | movementManeuverState | See 7.2.5.3. |
| 3.5.4.3.1.2.4.6 | Retrieve Lane Connection Status [Deprecated] | G.1 | | | |
| | | | 1217v01 – 1.2.9 | movementManeuverStatusBlock | See 7.2.9. |
| 3.5.4.3.1.2.5 | Retrieve Advisory Speed Requirements [Deprecated] | | | | |
| 3.5.4.3.1.2.5.1 | Retrieve Advisory Speed Type [Deprecated] | H.2.5 | | | |
| | | | 5.9.1 | maxChannels | |
| | | | 5.9.2 | channelTable | |
| | | | 5.9.2.1 | channelNumber | |
| | | | 1217v01 – 1.2.3 | advisorySpeedTable | See 7.2.3. |
| | | | 1217v01 – 1.2.3.1 | advisorySpeedIndex | See 7.2.3.1. |
| | | | 1217v01 – 1.2.3.2 | advisorySpeedType | See 7.2.3.2. |

© 2023 AASHTO / ITE / NEMA Copy Per RTM Distribution Permission

| Requirements Traceability Matrix (RTM) | | | | | |
|---|---|---|---|---|---|
| **FR ID** | **Functional Requirement** | **Dialog ID** | **Object ID** | **Object Name** | **Additional Specifications** |
| 3.5.4.3.1.2.5.2 | Retrieve Advisory Speed [Deprecated] | H.2.5 | | | |
| | | | 5.9.1 | maxChannels | |
| | | | 5.9.2 | channelTable | |
| | | | 5.9.2.1 | channelNumber | |
| | | | 1217v01 – 1.2.3 | advisorySpeedTable | See 7.2.3. |
| | | | 1217v01 – 1.2.3.1 | advisorySpeedIndex | See 7.2.3.1. |
| | | | 1217v01 – 1.2.3.3 | advisorySpeedAdvice | See 7.2.3.3. |
| 3.5.4.3.1.2.5.3 | Retrieve Advisory Speed Zone [Deprecated] | H.2.5 | | | |
| | | | 5.9.1 | maxChannels | |
| | | | 5.9.2 | channelTable | |
| | | | 5.9.2.1 | channelNumber | |
| | | | 1217v01 – 1.2.3 | advisorySpeedTable | See 7.2.3. |
| | | | 1217v01 – 1.2.3.1 | advisorySpeedIndex | See 7.2.3.1. |
| | | | 1217v01 – 1.2.3.4 | advisorySpeedZoneLength | See 7.2.3.4. |
| 3.5.4.3.1.2.5.4 | Retrieve Advisory Speed Vehicle Type [Deprecated] | H.2.5 | | | |
| | | | 5.9.1 | maxChannels | |
| | | | 5.9.2 | channelTable | |
| | | | 5.9.2.1 | channelNumber | |
| | | | 1217v01 – 1.2.3 | advisorySpeedTable | See 7.2.3. |
| | | | 1217v01 – 1.2.3.1 | advisorySpeedIndex | See 7.2.3.1. |

Copy Per RTM Distribution Permission © 2023 AASHTO / ITE / NEMA

| Requirements Traceability Matrix (RTM) | | | | | |
|---|---|---|---|---|---|
| **FR ID** | **Functional Requirement** | **Dialog ID** | **Object ID** | **Object Name** | **Additional Specifications** |
| | | | 1217v01 – 1.2.3.5 | advisorySpeedClass | See 7.2.3.5. |
| 3.5.4.3.1.2.5.5 | Retrieve Advisory Speed Confidence Level [Deprecated] | H.2.5 | | | |
| | | | 1217v01 – 1.2.2 | maxAdvisorySpeeds | See 7.2.2. |
| | | | 1217v01 – 1.2.3 | advisorySpeedTable | See 7.2.3. |
| | | | 1217v01 – 1.2.3.1 | advisorySpeedIndex | See 7.2.3.1. |
| | | | 1217v01 – 1.2.3.6 | advisorySpeedConfidence | See 7.2.3.6. |
| 3.5.4.3.1.2.6 | Retrieve Intersection Channel Assignment [Deprecated] | H.2.5 | | | |
| | | | 5.9.1 | maxChannels | |
| | | | 5.9.2 | channelTable | |
| | | | 5.9.2.1 | channelNumber | |
| | | | 5.9.2.8 | channelIntersectionId | |
| 3.5.4.3.2 | Exchange Next Occurrence of a Movement Requirements | | | | |
| 3.5.4.3.2.1 | Provide Movement Next Occurrence [Deprecated] | H.2.7 | | | |
| | | | 5.9.1 | maxChannels | |
| | | | 5.9.2.1 | channelNumber | |
| | | | 1217v01 – 1.2.7 | signalStatusTable | See 7.2.7. |
| | | | 1217v01 – 1.2.7.6 | signalNextTick | See 7.2.7.6. |
| 3.5.4.3.2.2 | Retrieve Movement Next Occurrence [Deprecated] | H.2.5 | | | |

© 2023 AASHTO / ITE / NEMA Copy Per RTM Distribution Permission

| Requirements Traceability Matrix (RTM) | | | | | |
|---|---|---|---|---|---|
| **FR ID** | **Functional Requirement** | **Dialog ID** | **Object ID** | **Object Name** | **Additional Specifications** |
| | | | 5.9.1 | maxChannels | |
| | | | 5.9.2.1 | channelNumber | |
| | | | 1217v01 – 1.2.7 | signalStatusTable | See 7.2.7. |
| | | | 1217v01 – 1.2.7.6 | signalNextTick | See 7.2.7.6. |
| 3.5.4.3.3 | Exchange Presence of Connected Device Requirements | | | | |
| 3.5.4.3.3.1 | Retrieve Connected Devices Presence Information Requirements | | | | |
| 3.5.4.3.3.1.1 | Retrieve Actuation Report (ASC) | H.2.5 | | | |
| | | | 5.18.2.7 | maxCvDetectionGroups | |
| | | | 5.18.2.8 | cvDetectionGroupTable | |
| | | | 5.18.2.8.1 | cvDetectionGroupNumber | |
| | | | 5.18.2.8.2 | cvDetectionGroupActuations | |
| 3.5.4.3.3.1.2 | Retrieve Detection Report (ASC) | | | | |
| | | H.2.5 | | | |
| | | | 5.18.2.11 | detectionReportSequence | |
| | | | 5.18.2.12 | detectionReportTable | |
| | | | 5.18.2.12.1 | detectionReportTime | |
| | | | 5.18.2.12.2 | detectionReportVolume | |
| | | | 5.18.2.12.3 | detectionReportSpeed | |
| | | | 5.18.2.12.4 | detectionReportTravelTime | |
| | | | 5.18.2.12.5 | detectionReportQueue | |
| | | | 5.18.2.12.6 | detectionReportGap | |
| | | | 5.18.2.12.7 | detectionReportPlatoon | |
| 3.5.4.3.3.2 | Provide Connected Devices Presence Information Requirements [Deprecated] | | | | |
| 3.5.4.3.3.2.1 | Provide Actuation Report [Deprecated] | H.2.7 | | | |

Copy Per RTM Distribution Permission © 2023 AASHTO / ITE / NEMA

| Requirements Traceability Matrix (RTM) | | | | | |
|---|---|---|---|---|---|
| **FR ID** | **Functional Requirement** | **Dialog ID** | **Object ID** | **Object Name** | **Additional Specifications** |
| | | | 5.18.2.7 | maxCvDetectionGroups | |
| | | | 5.18.2.8 | cvDetectionGroupTable | |
| | | | 5.18.2.8.1 | cvDetectionGroupNumber | |
| | | | 5.18.2.8.2 | cvDetectionGroupActuations | |
| 3.5.4.3.3.2.2 | Provide Detection Report [Deprecated] | 4.2.10 | | | |
| | | | 5.18.2.11 | detectionReportSequence | |
| | | | 5.18.2.12 | detectionReportTable | |
| | | | 5.18.2.12.1 | detectionReportTime | |
| | | | 5.18.2.12.2 | detectionReportVolume | |
| | | | 5.18.2.12.3 | detectionReportSpeed | |
| | | | 5.18.2.12.4 | detectionReportTravelTime | |
| | | | 5.18.2.12.5 | detectionReportQueue | |
| | | | 5.18.2.12.6 | detectionReportGap | |
| | | | 5.18.2.12.7 | detectionReportPlatoon | |
| 3.5.4.3.4 | Exchange Roadway Geometry Plan Information Requirements | | | | |
| 3.5.4.3.4.1 | Retrieve Roadway Geometry Plan Requirements | | | | |
| 3.5.4.3.4.1.1 | Retrieve MAP Plan in Effect | G.1 | | | |
| | | | 5.18.1.4 | mapActivatePlan | |
| 3.5.4.3.4.2 | Provide Roadway Geometry Plan Requirements [Deprecated] | | | | |
| 3.5.4.3.4.2.1 | Provide MAP Plan in Effect [Deprecated] | G.3 | | | |
| | | | 5.18.1.4 | mapActivatePlan | |
| 3.5.4.3.4.3 | Confirm MAP Plan Compatibility | 4.2.12 | | | |
| | | | 5.16.3.1 | rsuPortIndex | |
| | | | 5.17.5 | spatPortTable | |
| | | | 5.17.5.3 | spatPortMapActivationCode | |

© 2023 AASHTO / ITE / NEMA Copy Per RTM Distribution Permission

| Requirements Traceability Matrix (RTM) | | | | | |
|---|---|---|---|---|---|
| **FR ID** | **Functional Requirement** | **Dialog ID** | **Object ID** | **Object Name** | **Additional Specifications** |
| | | | 5.18.1.4 | mapActivatePlan | |
| 3.5.5 | Backward Compatibility Requirements | | | | |
| 3.5.5.1 | NTCIP 1202 v01—Configure Special Function State | H.2.5 | | | |
| | | | 5.4.13 | maxSpecialFunctionOutputs | |
| | | | 5.4.14 | specialFunctionOutputTable | |
| | | | 5.4.14.1 | specialFunctionOutputNumber | |
| | | | 5.4.14.2 | specialFunctionOutputState | |
| 3.6 | Supplemental Non-Communications Requirements | | | | |
| 3.6.1 | Response Time for Requests | | | | See Requirement 3.6.1 in the PRL. |
| 3.6.2 | Condition-Based Maximum Transmission Start Time | | | | See Requirement 3.6.2 in the PRL. |
| 3.6.3 | Signal Phase and Timing Data Performance Requirements | | | | |
| 3.6.3.1 | SPaT Maximum Transmission Start Time | | | | See Requirement 3.6.3.1 in the PRL. |
| 3.6.3.2 | Movement Time Point Minimum Transmission Rate | | | | See Requirement 3.6.3.2 in the PRL. |
| 3.6.3.3 | SPaT-data Request Transmission Rate [Deprecated] | | | | See Requirement 3.6.3.3 in the PRL. |
| 3.6.3.4 | Condition-Based SPaT Maximum Transmission Start Time [Deprecated] | | | | See Requirement 3.6.3.4 in the PRL. |
| 3.6.3.5 | SPaT Latency [Deprecated] | | | | See Requirement 3.6.3.5 in the PRL. |
| 3.6.3.6 | SPaT Maximum Transmission Rate | | | | See Requirement 3.6.3.6 in the PRL. |
| 3.6.3.7 | SPaT Time Accuracy | | | | See Requirement 3.6.3.7 in the PRL. |

Copy Per RTM Distribution Permission © 2023 AASHTO / ITE / NEMA

| Requirements Traceability Matrix (RTM) | | | | | |
|---|---|---|---|---|---|
| **FR ID** | **Functional Requirement** | **Dialog ID** | **Object ID** | **Object Name** | **Additional Specifications** |
| Annex H | NTCIP 1201 v03- and NTCIP 1103 v03-Derived Functional Requirements and Dialogs [Normative] | | | | |
| H.1 | Generic Functional Requirements | | | | |
| H.1.1 | Generic Configuration Requirements | | | | |
| H.1.1.1 | Determine Device Component Information | H.2.5 | | | |
| | | | 1201v03 – 2.2.2 | globalMaxModules | |
| | | | 1201v03 – 2.2.3 | globalModuleTable | |
| | | | 1201v03 – 2.2.3.1 | moduleNumber | |
| | | | 1201v03 – 2.2.3.2 | moduleDeviceNode | |
| | | | 1201v03 – 2.2.3.3 | moduleMake | |
| | | | 1201v03 – 2.2.3.4 | moduleModel | |
| | | | 1201v03 – 2.2.3.5 | moduleVersion | |
| | | | 1201v03 – 2.2.3.6 | moduleType | |
| H.1.1.2 | Determine Device Configuration Identifier Requirements | | | | |
| H.1.1.2.1 | Determine Unique Deployment Configuration Identifier | G.1 | | | |
| | | | 1201v03 – 2.2.1 | globalSetIDParameter | |
| H.1.1.2.2 | Determine Configuration Identifier Parameter Content | H.2.5 | | | |

© 2023 AASHTO / ITE / NEMA Copy Per RTM Distribution Permission

| Requirements Traceability Matrix (RTM) | | | | | |
|---|---|---|---|---|---|
| **FR ID** | **Functional Requirement** | **Dialog ID** | **Object ID** | **Object Name** | **Additional Specifications** |
| | | | 5.4.24 | maxGlobalSetIds | |
| | | | 5.4.25 | globalSetIdTable | |
| | | | 5.4.25.1 | globalSetIdNumber | |
| | | | 5.4.25.2 | globalSetIdOID | |
| H.1.1.3 | Determine Supported Standards | G.1 | | | |
| | | | 1201v03 – 2.2.4 | controllerBaseStandards | |
| H.1.1.4 | Manage Unique System Name | G.3 | | | |
| | | | RFC 1213 Clause 6 | sysName | |
| | | | RFC 1213 Clause 6 | sysLocation | |
| H.1.1.5 | Manage Time | | | | |
| H.1.1.5.1 | Configure Time | G.3 | | | |
| | | | 1201v03 – 2.4.1 | globalTime | |
| H.1.1.5.2 | Configure Time Zone | G.3 | | | |
| | | | 1201v03 – 2.4.6 | controllerStandardTimeZone | |
| H.1.1.5.3 | Configure Daylight Saving Mode | H.2.7 | | | |
| | | | 1201v03 – 2.4.2 | globalDaylightSaving | |
| | | | 1201v03 – 2.4.8.1 | maxDaylightSavingEntries | |
| | | | 1201v03 – 2.4.8.2 | dstTable | |
| | | | 1201v03 – 2.4.8.2.1 | dstEntryNumber | |
| | | | 1201v03 – 2.4.8.2.2 | dstBeginMonth | |

Copy Per RTM Distribution Permission © 2023 AASHTO / ITE / NEMA

| Requirements Traceability Matrix (RTM) | | | | | |
|---|---|---|---|---|---|
| **FR ID** | **Functional Requirement** | **Dialog ID** | **Object ID** | **Object Name** | **Additional Specifications** |
| | | | 1201v03 – 2.4.8.2.3 | dstBeginOccurrences | |
| | | | 1201v03 – 2.4.8.2.4 | dstBeginDayOfWeek | |
| | | | 1201v03 – 2.4.8.2.5 | dstBeginDayOfMonth | |
| | | | 1201v03 – 2.4.8.2.6 | dstBeginSecondsToTransition | |
| | | | 1201v03 – 2.4.8.2.7 | dstEndMonth | |
| | | | 1201v03 – 2.4.8.2.8 | dstEndOccurrences | |
| | | | 1201v03 – 2.4.8.2.9 | dstEndDayOfWeek | |
| | | | 1201v03 – 2.4.8.2.10 | dstEndDayOfMonth | |
| | | | 1201v03 – 2.4.8.2.11 | dstEndSecondsToTransition | |
| | | | 1201v03 – 2.4.8.2.12 | dstSecondsToAdjust | |
| | | | 1201v03 – 2.4.7 | controllerLocalTime | |
| H.1.1.5.4 | Determine Time Setting | G.1 | | | |
| | | | 1201v03 – 2.4.1 | globalTime | |
| H.1.1.5.5 | Determine Time Zone Setting | G.1 | | | |
| | | | 1201v03 – 2.4.6 | controllerStandardTimeZone | |
| H.1.1.5.6 | Determine Daylight Saving Mode Setting | H.2.5 | | | |
| | | | 1201v03 – 2.4.2 | globalDaylightSaving | |

© 2023 AASHTO / ITE / NEMA Copy Per RTM Distribution Permission

| Requirements Traceability Matrix (RTM) | | | | | |
|---|---|---|---|---|---|
| **FR ID** | **Functional Requirement** | **Dialog ID** | **Object ID** | **Object Name** | **Additional Specifications** |
| | | | 1201v03 – 2.4.8.1 | maxDaylightSavingEntries | |
| | | | 1201v03 – 2.4.8.2 | dstTable | |
| | | | 1201v03 – 2.4.8.2.1 | dstEntryNumber | |
| | | | 1201v03 – 2.4.8.2.2 | dstBeginMonth | |
| | | | 1201v03 – 2.4.8.2.3 | dstBeginOccurrences | |
| | | | 1201v03 – 2.4.8.2.4 | dstBeginDayOfWeek | |
| | | | 1201v03 – 2.4.8.2.5 | dstBeginDayOfMonth | |
| | | | 1201v03 – 2.4.8.2.6 | dstBeginSecondsToTransition | |
| | | | 1201v03 – 2.4.8.2.7 | dstEndMonth | |
| | | | 1201v03 – 2.4.8.2.8 | dstEndOccurrences | |
| | | | 1201v03 – 2.4.8.2.9 | dstEndDayOfWeek | |
| | | | 1201v03 – 2.4.8.2.10 | dstEndDayOfMonth | |
| | | | 1201v03 – 2.4.8.2.11 | dstEndSecondsToTransition | |
| | | | 1201v03 – 2.4.8.2.12 | dstSecondsToAdjust | |
| | | | 1201v03 – 2.4.7 | controllerLocalTime | |
| H.1.1.5.7 | Monitor Current Time | G.1 | | | |

Copy Per RTM Distribution Permission
© 2023 AASHTO / ITE / NEMA

| Requirements Traceability Matrix (RTM) | | | | | |
|---|---|---|---|---|---|
| **FR ID** | **Functional Requirement** | **Dialog ID** | **Object ID** | **Object Name** | **Additional Specifications** |
| | | | 1201v03 – 2.4.7 | controllerLocalTime | |
| | | | 1201v03 – 2.4.6 | controllerStandardTimeZone | |
| H.1.1.6 | Managing Auxiliary Ports Requirements | | | | |
| H.1.1.6.1 | Determine External Port Information | H.2.5 | | | |
| | | | 1201v03 – 2.9.1 | maxAuxIOv2TableNumDigitalPorts | |
| | | | 1201v03 – 2.9.2 | maxAuxIOv2TableNumAnalogPorts | |
| | | | 1201v03 – 2.9.3 | auxIOv2Table | |
| | | | 1201v03 – 2.9.3.1 | auxIOv2PortType | |
| | | | 1201v03 – 2.9.3.2 | auxIOv2PortNumber | |
| | | | 1201v03 – 2.9.3.3 | auxIOv2PortDescription | |
| | | | 1201v03 – 2.9.3.4 | auxIOv2PortResolution | |
| | | | 1201v03 – 2.9.3.6 | auxIOv2PortDirection | |
| H.1.1.6.2 | Configure Port Information | H.2.7 | | | |
| | | | 1201v03 – 2.9.3 | auxIOv2Table | |
| | | | 1201v03 – 2.9.3.1 | auxIOv2PortType | |
| | | | 1201v03 – 2.9.3.2 | auxIOv2PortNumber | |
| | | | 1201v03 – 2.9.3.3 | auxIOv2PortDescription | |

© 2023 AASHTO / ITE / NEMA Copy Per RTM Distribution Permission

| Requirements Traceability Matrix (RTM) | | | | | |
|---|---|---|---|---|---|
| **FR ID** | **Functional Requirement** | **Dialog ID** | **Object ID** | **Object Name** | **Additional Specifications** |
| H.1.1.6.3 | Required Number of Auxiliary Ports | G.1 | | | |
| | | | 1201v03 – 2.9.1 | maxAuxIOv2TableNumDigitalPorts | |
| | | | 1201v03 – 2.9.2 | maxAuxIOv2TableNumAnalogPorts | |
| H.1.1.7 | Manage Generic Scheduler Requirements | | | | |
| H.1.1.7.1 | Configure Timebased Scheduler Month-Day-Date | H.2.7 | | | |
| | | | 1201v03 – 2.4.3.2.1 | timeBaseScheduleNumber | |
| | | | 1201v03 – 2.4.3.2.2 | timeBaseScheduleMonth | |
| | | | 1201v03 – 2.4.3.2.3 | timeBaseScheduleDay | |
| | | | 1201v03 – 2.4.3.2.4 | timeBaseScheduleDate | |
| | | | 1201v03 – 2.4.3.2.5 | timeBaseScheduleDayPlan | |
| H.1.1.7.2 | Configure Timebased Scheduler Day Plans and Timebased Actions | H.2.7 | | | |
| | | | 1201v03 – 2.4.4.3.1 | dayPlanNumber | |
| | | | 1201v03 – 2.4.4.3.2 | dayPlanEventNumber | |
| | | | 1201v03 – 2.4.4.3.3 | dayPlanHour | |
| | | | 1201v03 – 2.4.4.3.4 | dayPlanMinute | |
| | | | 1201v03 – 2.4.4.3.5 | dayPlanActionNumberOID | |
| H.1.1.8 | Manage Security Definitions Requirements | | | | |

Copy Per RTM Distribution Permission © 2023 AASHTO / ITE / NEMA

| Requirements Traceability Matrix (RTM) | | | | | |
|---|---|---|---|---|---|
| **FR ID** | **Functional Requirement** | **Dialog ID** | **Object ID** | **Object Name** | **Additional Specifications** |
| H.1.1.8.1 | Configure Security Definitions | H.2.7 | | | |
| | | | 1103v03 – A.8.1 | communityNameAdmin | |
| | | | 1103v03 – A.8.2 | communityNamesMax | |
| | | | 1103v03 – A.8.3 | communityNameTable | |
| | | | 1103v03 – A.8.3.1 | communityNameIndex | |
| | | | 1103v03 – A.8.3.2 | communityNameUser | |
| | | | 1103v03 – A.8.3.3 | communityNameAccessMask | |
| H.1.1.9 | Manage Dynamic Objects Requirements | | | | |
| H.1.1.9.1 | Configure Dynamic Object Requirements | | | | |
| H.1.1.9.1.1 | Configure Dynamic Object Persistence Time | G.3 | | | |
| | | | 1103v03 – A.5.1.1 | dynamicObjectPersistence | |
| H.1.1.9.1.2 | Configure Dynamic Object Configuration ID | G.3 | | | |
| | | | 1103v03 – A.5.1.2 | dynamicObjectTableConfigID | |
| H.1.1.10 | Manage Exception Reporting Requirements | | | | |
| H.1.1.10.1 | Enable/Disable Exception Reporting | G.3 | | | |
| | | | 1103v03 – A.9.3.1 | trapControl | |
| H.1.1.10.2 | Configure Exception Reporting Condition Requirements | | | | |
| H.1.1.10.2.1 | Configure a Monitored (Watch) Object | H.2.7 | | | |
| | | | 1103v03 – A.7.5 | eventLogConfigTable | |

© 2023 AASHTO / ITE / NEMA Copy Per RTM Distribution Permission

| Requirements Traceability Matrix (RTM) | | | | | |
|---|---|---|---|---|---|
| **FR ID** | **Functional Requirement** | **Dialog ID** | **Object ID** | **Object Name** | **Additional Specifications** |
| | | | 1103v03 – A.7.5.1 | eventConfigID | |
| | | | 1103v03 – A.7.5.2 | eventConfigClass | |
| | | | 1103v03 – A.7.5.3 | eventConfigMode | |
| | | | 1103v03 – A.7.5.4 | eventConfigCompareValue | |
| | | | 1103v03 – A.7.5.5 | eventConfigCompareValue2 | |
| | | | 1103v03 – A.7.5.6 | eventConfigCompareOID | |
| | | | 1103v03 – A.7.5.7 | eventConfigLogOID | |
| | | | 1103v03 – A.7.5.8 | eventConfigAction | |
| | | | 1103v03 – A.9.1.3 | watchObjectDefinitionTable | |
| | | | 1103v03 – A.9.1.3.1 | watchID | |
| | | | 1103v03 – A.9.1.3.2 | watchStatus | |
| | | | 1103v03 – A.9.1.3.3 | watchBlock | |
| | | | 1103v03 – A.9.1.3.4 | watchOID | |
| H.1.1.10.2.2 | Configure a Monitored Group of Objects (Watch Block) | H.2.7 | | | |
| | | | 1103v03 – A.7.5 | eventLogConfigTable | |

Copy Per RTM Distribution Permission
© 2023 AASHTO / ITE / NEMA

| Requirements Traceability Matrix (RTM) | | | | | |
|---|---|---|---|---|---|
| **FR ID** | **Functional Requirement** | **Dialog ID** | **Object ID** | **Object Name** | **Additional Specifications** |
| | | | 1103v03 – A.7.5.1 | eventConfigID | |
| | | | 1103v03 – A.7.5.2 | eventConfigClass | |
| | | | 1103v03 – A.7.5.3 | eventConfigMode | |
| | | | 1103v03 – A.7.5.4 | eventConfigCompareValue | |
| | | | 1103v03 – A.7.5.5 | eventConfigCompareValue2 | |
| | | | 1103v03 – A.7.5.6 | eventConfigCompareOID | |
| | | | 1103v03 – A.7.5.7 | eventConfigLogOID | |
| | | | 1103v03 – A.7.5.8 | eventConfigAction | |
| | | | 1103v03 – A.9.1.4 | watchBlockTable | |
| | | | 1103v03 – A.9.1.4.1 | watchBlockNumber | |
| | | | 1103v03 – A.9.1.4.2 | watchBlockStatus | |
| | | | 1103v03 – A.9.1.4.3 | watchBlockDescription | |
| | | | 1103v03 – A.9.1.4.4 | watchBlockValue | |
| H.1.1.10.3 | Configure Exception Reporting Data Transmission Requirements | | | | |
| H.1.1.10.3.1 | Configure a Report Object | H.2.7 | | | |
| | | | 1103v03 – A.7.5 | eventLogConfigTable | |

© 2023 AASHTO / ITE / NEMA Copy Per RTM Distribution Permission

| Requirements Traceability Matrix (RTM) | | | | | |
|---|---|---|---|---|---|
| **FR ID** | **Functional Requirement** | **Dialog ID** | **Object ID** | **Object Name** | **Additional Specifications** |
| | | | 1103v03 – A.7.5.1 | eventConfigID | |
| | | | 1103v03 – A.7.5.7 | eventConfigLogOID | |
| | | | 1103v03 – A.7.5.8 | eventConfigAction | |
| | | | 1103v03 – A.9.2.3 | reportObjectDefinitionTable | |
| | | | 1103v03 – A.9.2.3.1 | reportID | |
| | | | 1103v03 – A.9.2.3.2 | reportStatus | |
| | | | 1103v03 – A.9.2.3.3 | reportBlock | |
| | | | 1103v03 – A.9.2.3.4 | reportOID | |
| | | | 1103v03 – A.9.3.7 | trapTable | |
| | | | 1103v03 – A.9.3.7.1 | trapDestEnable | |
| H.1.1.10.3.2 | Configure a Report Group of Objects (Block) | H.2.7 | | | |
| | | | 1103v03 – A.7.5 | eventLogConfigTable | |
| | | | 1103v03 – A.7.5.1 | eventConfigID | |
| | | | 1103v03 – A.7.5.7 | eventConfigLogOID | |
| | | | 1103v03 – A.7.5.8 | eventConfigAction | |
| | | | 1103v03 – A.9.2.4 | reportBlockTable | |

Copy Per RTM Distribution Permission © 2023 AASHTO / ITE / NEMA

| Requirements Traceability Matrix (RTM) | | | | | |
|---|---|---|---|---|---|
| **FR ID** | **Functional Requirement** | **Dialog ID** | **Object ID** | **Object Name** | **Additional Specifications** |
| | | | 1103v03 – A.9.2.4.1 | reportBlockNumber | |
| | | | 1103v03 – A.9.2.4.2 | reportBlockStatus | |
| | | | 1103v03 – A.9.2.4.3 | reportBlockDescription | |
| | | | 1103v03 – A.9.2.4.4 | reportBlockValue | |
| H.1.1.10.4 | Configure Exception Reporting Destination | H.2.7 | | | |
| | | | 1103v03 – A.6.2 | logicalNameTranslationTable | |
| | | | 1103v03 – A.6.2.1 | logicalNameTranslationIndex | |
| | | | 1103v03 – A.6.2.2 | logicalNameTranslationLogicalName | |
| | | | 1103v03 – A.6.2.3 | logicalNameTranslationNetworkAddress | |
| | | | 1103v03 – A.6.2.4 | logicalNameTranslationStatus | |
| | | | 1103v03 – A.7.5.1 | eventConfigID | |
| | | | 1103v03 – A.9.3.6 | trapMgmtTable | |
| | | | 1103v03 – A.9.3.6.1 | trapMgmtManagerIndex | |
| | | | 1103v03 – A.9.3.6.2 | trapMgmtManagerPointer | |
| | | | 1103v03 – A.9.3.7 | trapTable | |
| | | | 1103v03 – A.9.3.7.1 | trapDestEnable | |

© 2023 AASHTO / ITE / NEMA Copy Per RTM Distribution Permission

| Requirements Traceability Matrix (RTM) | | | | | |
|---|---|---|---|---|---|
| **FR ID** | **Functional Requirement** | **Dialog ID** | **Object ID** | **Object Name** | **Additional Specifications** |
| H.1.1.10.5 | Configure Exception Reporting Community | H.2.7 | | | |
| | | | 1103v03 – A.8.3 | communityNameTable | |
| | | | 1103v03 – A.8.3.1 | communityNameIndex | |
| | | | 1103v03 – A.8.3.2 | communityNameUser | |
| | | | 1103v03 – A.8.3.3 | communityNameAccessMask | |
| | | | 1103v03 – A.9.3.6 | trapMgmtTable | |
| | | | 1103v03 – A.9.3.6.1 | trapMgmtManagerIndex | |
| | | | 1103v03 – A.9.3.6.3 | trapMgmtCommunityNamePointer | |
| H.1.1.10.6 | Configure Exception Reporting Operational Mode Requirements | | | | |
| H.1.1.10.6.1 | Configure Exception Reporting Acknowledgement | H.2.7 | | | |
| | | | 1103v03 – A.7.5.1 | eventConfigID | |
| | | | 1103v03 – A.9.3.6 | trapMgmtTable | |
| | | | 1103v03 – A.9.3.6.1 | trapMgmtManagerIndex | |
| | | | 1103v03 – A.9.3.6.7 | trapMgmtMaxRetries | |
| | | | 1103v03 – A.9.3.6.8 | trapMgmtRepeatInterval | |
| | | | 1103v03 – A.9.3.6.9 | trapMgmtDelta | |

Copy Per RTM Distribution Permission © 2023 AASHTO / ITE / NEMA

| Requirements Traceability Matrix (RTM) | | | | | |
|---|---|---|---|---|---|
| **FR ID** | **Functional Requirement** | **Dialog ID** | **Object ID** | **Object Name** | **Additional Specifications** |
| | | | 1103v03 – A.9.3.7 | trapTable | |
| | | | 1103v03 – A.9.3.7.2 | trapMode | |
| H.1.1.10.6.2 | Configure Exception Reporting Aggregation | H.2.7 | | | |
| | | | 1103v03 – A.9.3.7 | trapTable | |
| | | | 1103v03 – A.9.3.7.2 | trapMode | |
| | | | 1103v03 – A.9.3.7.3 | trapAggregationTime | |
| | | | 1103v03 – A.9.3.6 | trapMgmtTable | |
| | | | 1103v03 – A.9.3.6.1 | trapMgmtManagerIndex | |
| | | | 1103v03 – A.9.3.6.7 | trapMgmtMaxRetries | |
| | | | 1103v03 – A.9.3.6.8 | trapMgmtRepeatInterval | |
| | | | 1103v03 – A.9.3.6.9 | trapMgmtDelta | |
| H.1.1.10.6.3 | Configure Exception Reporting Queue | H.2.7 | | | |
| | | | 1103v03 – A.9.3.7 | trapTable | |
| | | | 1103v03 – A.9.3.7.2 | trapMode | |
| | | | 1103v03 – A.9.3.7.3 | trapAggregationTime | |
| | | | 1103v03 – A.9.3.6 | trapMgmtTable | |

© 2023 AASHTO / ITE / NEMA Copy Per RTM Distribution Permission

| Requirements Traceability Matrix (RTM) | | | | | |
|---|---|---|---|---|---|
| **FR ID** | **Functional Requirement** | **Dialog ID** | **Object ID** | **Object Name** | **Additional Specifications** |
| | | | 1103v03 – A.9.3.6.1 | trapMgmtManagerIndex | |
| | | | 1103v03 – A.9.3.6.7 | trapMgmtMaxRetries | |
| | | | 1103v03 – A.9.3.6.8 | trapMgmtRepeatInterval | |
| | | | 1103v03 – A.9.3.6.9 | trapMgmtDelta | |
| | | | 1103v03 – A.9.3.6.10 | trapMgmtQueueDepth | |
| H.1.1.10.6.4 | Configure Exception Reporting (Forced) | H.2.7 | | | |
| | | | 1103v03 – A.9.3.7 | trapTable | |
| | | | 1103v03 – A.9.3.7.2 | trapMode | |
| | | | 1103v03 – A.9.3.7.3 | trapAggregationTime | |
| H.1.1.10.6.5 | Configure Exception Reporting Communications | H.2.7 | | | |
| | | | 1103v03 – A.9.3.6 | trapMgmtTable | |
| | | | 1103v03 – A.9.3.6.1 | trapMgmtManagerIndex | |
| | | | 1103v03 – A.9.3.6.4 | trapMgmtApplicationProtocol | |
| | | | 1103v03 – A.9.3.6.5 | trapMgmtTransportProtocol | |
| | | | 1103v03 – A.9.3.6.6 | trapMgmtPortNum | |
| H.1.1.10.6.6 | Configure Exception Reporting—Maximum Rate | H.2.7 | | | |

Copy Per RTM Distribution Permission © 2023 AASHTO / ITE / NEMA

| Requirements Traceability Matrix (RTM) | | | | | |
|---|---|---|---|---|---|
| **FR ID** | **Functional Requirement** | **Dialog ID** | **Object ID** | **Object Name** | **Additional Specifications** |
| | | | 1103v03 – A.9.3.6 | trapMgmtTable | |
| | | | 1103v03 – A.9.3.6.1 | trapMgmtManagerIndex | |
| | | | 1103v03 – A.9.3.6.12 | trapMgmtAntiStreamRate | |
| H.1.1.10.7 | Determine Watch Block Capabilities | G.1 | | | |
| | | | 1103v03 – A.7.4 | maxEventLogConfigs | |
| | | | 1103v03 – A.9.1.1 | maxWatchObjects | |
| | | | 1103v03 – A.9.1.2 | maxWatchBlocks | |
| H.1.1.10.8 | Determine Report Block Capabilities | G.1 | | | |
| | | | 1103v03 – A.9.2.1 | maxReportObjects | |
| | | | 1103v03 – A.9.2.2 | maxReportBlocks | |
| H.1.1.10.9 | Determine Exception Reporting Trap Channel Capabilities | G.1 | | | |
| | | | 1103v03 – A.9.3.3 | trapMgmtMaxEntries | |
| H.1.1.10.10 | Determine Exception Reporting Aggregation Capabilities | G.1 | | | |
| | | | 1103v03 – A.9.3.4 | trapMaxAggregationEvents | |
| | | | 1103v03 – A.9.3.5 | trapMaxAggregationSize | |
| H.1.1.10.11 | Determine Event Reporting Latency | G.1 | | | |
| | | | 1103v03 – A.7.7.8 | eventTimeLatency | |

© 2023 AASHTO / ITE / NEMA Copy Per RTM Distribution Permission

| Requirements Traceability Matrix (RTM) | | | | | |
|---|---|---|---|---|---|
| **FR ID** | **Functional Requirement** | **Dialog ID** | **Object ID** | **Object Name** | **Additional Specifications** |
| H.1.1.10.12 | Monitor Communications Link State | H.2.5 | | | |
| | | | 1103v03 – A.9.3.6 | trapMgmtTable | |
| | | | 1103v03 – A.9.3.6.1 | trapMgmtManagerIndex | |
| | | | 1103v03 – A.9.3.6.11 | trapMgmtLinkStateStatus | |
| H.1.1.10.13 | Monitor Exception Based Reporting Status Requirements | | | | |
| H.1.1.10.13.1 | Monitor Exception Based Communications Link Error | H.2.5 | | | |
| | | | 1103v03 – A.9.3.3 | trapMgmtMaxEntries | |
| | | | 1103v03 – A.9.3.6 | trapMgmtTable | |
| | | | 1103v03 – A.9.3.6.1 | trapMgmtManagerIndex | |
| | | | 1103v03 – A.9.3.6.13 | trapMgmtErrStatus | |
| H.1.1.10.13.2 | Monitor Exception Based Maximum Rate Exceeded | H.2.5 | | | |
| | | | 1103v03 – A.9.3.3 | trapMgmtMaxEntries | |
| | | | 1103v03 – A.9.3.6 | trapMgmtTable | |
| | | | 1103v03 – A.9.3.6.1 | trapMgmtManagerIndex | |
| | | | 1103v03 – A.9.3.6.13 | trapMgmtErrStatus | |
| H.1.1.10.13.3 | Monitor Exception Based Queue Full Error | H.2.5 | | | |

Copy Per RTM Distribution Permission
© 2023 AASHTO / ITE / NEMA

| Requirements Traceability Matrix (RTM) | | | | | |
|---|---|---|---|---|---|
| **FR ID** | **Functional Requirement** | **Dialog ID** | **Object ID** | **Object Name** | **Additional Specifications** |
| | | | 1103v03 – A.9.3.3 | trapMgmtMaxEntries | |
| | | | 1103v03 – A.9.3.6 | trapMgmtTable | |
| | | | 1103v03 – A.9.3.6.1 | trapMgmtManagerIndex | |
| | | | 1103v03 – A.9.3.6.13 | trapMgmtErrStatus | |
| H.1.1.10.14 | Monitor Exception Based Transmissions | H.2.5 | | | |
| | | | 1103v03 – A.9.3.3 | trapMgmtMaxEntries | |
| | | | 1103v03 – A.9.3.6 | trapMgmtTable | |
| | | | 1103v03 – A.9.3.6.1 | trapMgmtManagerIndex | |
| | | | 1103v03 – A.9.3.6.16 | trapMgmtSeqNum | |
| H.1.1.10.15 | Monitor Number of Lost Queued Exception Based Reports | H.2.5 | | | |
| | | | 1103v03 – A.9.3.3 | trapMgmtMaxEntries | |
| | | | 1103v03 – A.9.3.6 | trapMgmtTable | |
| | | | 1103v03 – A.9.3.6.1 | trapMgmtManagerIndex | |
| | | | 1103v03 – A.9.3.6.14 | trapMgmtLostTraps | |
| H.1.1.10.16 | Monitor Number of Exception Based Events | H.2.5 | | | |
| | | | 1103v03 – A.7.5.1 | eventConfigID | |

© 2023 AASHTO / ITE / NEMA Copy Per RTM Distribution Permission

| Requirements Traceability Matrix (RTM) | | | | | |
|---|---|---|---|---|---|
| **FR ID** | **Functional Requirement** | **Dialog ID** | **Object ID** | **Object Name** | **Additional Specifications** |
| | | | 1103v03 – A.9.3.3 | trapMgmtMaxEntries | |
| | | | 1103v03 – A.9.3.6 | trapMgmtTable | |
| | | | 1103v03 – A.9.3.6.1 | trapMgmtManagerIndex | |
| | | | 1103v03 – A.9.3.7 | trapTable | |
| | | | 1103v03 – A.9.3.7.4 | trapCounter | |
| H.1.1.10.17 | Monitor Exception Based Data | G.3 | | | |
| | | | 1103v03 – A.9.3.2 | trapData | |
| | | | 1103v03 – A.9.4.1 | trapEvent | |
| H.1.1.10.18 | Clear Event Class | G.3 | | | |
| | | | 1103v03 – A.9.5.1 | eventClearClasses | |
| H.1.1.10.19 | Clear Event Configuration | G.3 | | | |
| | | | 1103v03 – A.9.5.2 | eventClearConfiguration | |
| H.1.1.10.20 | Clear Event Log Table | G.3 | | | |
| | | | 1103v03 – A.9.5.3 | eventClearLog | |
| H.1.1.10.21 | Clear Report Objects | G.3 | | | |
| | | | 1103v03 – A.9.5.4 | clearReportObjects | |
| H.1.1.10.22 | Clear Report Blocks | G.3 | | | |
| | | | 1103v03 – A.9.5.5 | clearReportBlockTable | |

Copy Per RTM Distribution Permission © 2023 AASHTO / ITE / NEMA

| Requirements Traceability Matrix (RTM) | | | | | |
|---|---|---|---|---|---|
| **FR ID** | **Functional Requirement** | **Dialog ID** | **Object ID** | **Object Name** | **Additional Specifications** |
| H.1.1.10.23 | Clear Watch Objects | G.3 | | | |
| | | | 1103v03 – A.9.5.6 | clearWatchObjects | |
| H.1.1.10.24 | Clear Watch Blocks | G.3 | | | |
| | | | 1103v03 – A.9.5.7 | clearWatchBlockTable | |
| H.1.1.10.25 | Clear Exception Based Reporting Tables | G.3 | | | |
| | | | 1103v03 – A.9.5.8 | clearTrapMgmtTable | |
| H.1.1.10.26 | Reset a Communications Link | H.2.7 | | | |
| | | | 1103v03 – A.9.3.6 | trapMgmtTable | |
| | | | 1103v03 – A.9.3.6.1 | trapMgmtManagerIndex | |
| | | | 1103v03 – A.9.3.6.17 | trapMgmtSeqNumAck | |
| H.1.1.11 | Configure System Contact Information | G.3 | | | |
| | | | RFC 1213 Clause 6 | sysContact | |
| H.1.1.12 | Monitor Other System Information | G.1 | | | |
| | | | RFC 1213 Clause 6 | sysDescr | |
| | | | RFC 1213 Clause 6 | sysObjectID | |
| | | | RFC 1213 Clause 6 | sysUpTime | |
| | | | RFC 1213 Clause 6 | sysServices | |
| H.1.2 | Generic Status Monitoring Requirements | | | | |
| H.1.2.1 | Monitor Status of External Device | H.2.5 | | | |

© 2023 AASHTO / ITE / NEMA Copy Per RTM Distribution Permission

| Requirements Traceability Matrix (RTM) | | | | | |
|---|---|---|---|---|---|
| **FR ID** | **Functional Requirement** | **Dialog ID** | **Object ID** | **Object Name** | **Additional Specifications** |
| | | | 1201v03 – 2.9.1 | maxAuxIOv2TableNumDigitalPorts | |
| | | | 1201v03 – 2.9.2 | maxAuxIOv2TableNumAnalogPorts | |
| | | | 1201v03 – 2.9.3 | auxIOv2Table | |
| | | | 1201v03 – 2.9.3.1 | auxIOv2PortType | |
| | | | 1201v03 – 2.9.3.2 | auxIOv2PortNumber | |
| | | | 1201v03 – 2.9.3.5 | auxIOv2PortValue | |
| | | | 1201v03 – 2.9.3.7 | auxIOv2PortLastCommandedState | |
| H.1.2.2 | Retrieve Database Management Requirements | | | | |
| H.1.2.2.1 | Monitor Database Operation | G.1 | | | |
| | | | 1201v03 – 2.3.1 | dbCreateTransaction | |
| H.1.2.2.2 | Monitor Database Operation Status | G.1 | | | |
| | | | 1201v03 – 2.3.6 | dbVerifyStatus | |
| H.1.2.2.3 | Monitor Database Operation Error Status | G.1 | | | |
| | | | 1201v03 – 2.3.7 | dbVerifyError | |
| H.1.2.3 | Retrieve Generic Scheduler Settings Requirements | | | | |
| H.1.2.3.1 | Monitor Timebased Scheduler Month-Day-Date | H.2.5 | | | |
| | | | 1201v03 – 2.4.3.1 | maxTimeBaseScheduleEntries | |

Copy Per RTM Distribution Permission
© 2023 AASHTO / ITE / NEMA

| Requirements Traceability Matrix (RTM) | | | | | |
|---|---|---|---|---|---|
| **FR ID** | **Functional Requirement** | **Dialog ID** | **Object ID** | **Object Name** | **Additional Specifications** |
| | | | 1201v03 – 2.4.3.2.1 | timeBaseScheduleNumber | |
| | | | 1201v03 – 2.4.3.2.2 | timeBaseScheduleMonth | |
| | | | 1201v03 – 2.4.3.2.3 | timeBaseScheduleDay | |
| | | | 1201v03 – 2.4.3.2.4 | timeBaseScheduleDate | |
| | | | 1201v03 – 2.4.3.2.5 | timeBaseScheduleDayPlan | |
| H.1.2.3.2 | Monitor Timebased Scheduler Day Plans and Timebased Actions | H.2.7 | | | |
| | | | 1201v03 – 2.4.4.3.1 | dayPlanNumber | |
| | | | 1201v03 – 2.4.4.3.2 | dayPlanEventNumber | |
| | | | 1201v03 – 2.4.4.3.3 | dayPlanHour | |
| | | | 1201v03 – 2.4.4.3.4 | dayPlanMinute | |
| | | | 1201v03 – 2.4.4.3.5 | dayPlanActionNumberOID | |
| H.1.2.3.3 | Monitor Active Timebased Schedule | H.2.6 | | | |
| | | | 1201v03 – 2.4.3.2.1 | timeBaseScheduleNumber | |
| | | | 1201v03 – 2.4.3.2.2 | timeBaseScheduleMonth | |
| | | | 1201v03 – 2.4.3.2.3 | timeBaseScheduleDay | |
| | | | 1201v03 – 2.4.3.2.4 | timeBaseScheduleDate | |

© 2023 AASHTO / ITE / NEMA Copy Per RTM Distribution Permission

| Requirements Traceability Matrix (RTM) | | | | | |
|---|---|---|---|---|---|
| **FR ID** | **Functional Requirement** | **Dialog ID** | **Object ID** | **Object Name** | **Additional Specifications** |
| | | | 1201v03 – 2.4.3.2.5 | timeBaseScheduleDayPlan | |
| H.1.2.3.4 | Monitor Active Timebased Schedule Day Plan and Timebased Actions | G.1 | | | |
| | | | 1201v03 – 2.4.4.4 | dayPlanStatus | |
| H.1.2.4 | Retrieve Security Definitions Requirements | | | | |
| H.1.2.4.1 | Determine Security Definitions | H.2.5 | | | |
| | | | 1103v03 – A.8.1 | communityNameAdmin | |
| | | | 1103v03 – A.8.2 | communityNamesMax | |
| | | | 1103v03 – A.8.3 | communityNameTable | |
| | | | 1103v03 – A.8.3.1 | communityNameIndex | |
| | | | 1103v03 – A.8.3.2 | communityNameUser | |
| | | | 1103v03 – A.8.3.3 | communityNameAccessMask | |
| H.1.2.5 | Retrieve Dynamic Objects Requirements | | | | |
| H.1.2.5.1 | Determine Dynamic Objects Requirements | | | | |
| H.1.2.5.1.1 | Determine Dynamic Object Persistence Time | G.1 | | | |
| | | | 1103v03 – A.5.1.1 | dynamicObjectPersistence | |
| H.1.2.5.1.2 | Determine Dynamic Object Configuration ID | G.1 | | | |
| | | | 1103v03 – A.5.1.2 | dynamicObjectTableConfigID | |
| H.1.2.5.2 | Monitor STMP-Related Communications Requirements | | | | |


© 2023 AASHTO / ITE / NEMA

| Requirements Traceability Matrix (RTM) | | | | | |
|---|---|---|---|---|---|
| **FR ID** | **Functional Requirement** | **Dialog ID** | **Object ID** | **Object Name** | **Additional Specifications** |
| H.1.2.5.2.1 | Monitor STMP Data Exchange Requirements | | | | |
| H.1.2.5.2.1.1 | Monitor Incoming and Outgoing STMP Packet Exchanges | G.1 | | | |
| | | | 1103v03 – A.4.1.1 | stmpInPkts | |
| | | | 1103v03 – A.4.1.2 | stmpOutPkts | |
| H.1.2.5.2.1.2 | Monitor Incoming and Outgoing STMP Packet Types | G.1 | | | |
| | | | 1103v03 – A.4.1.15 | stmpInGetRequests | |
| | | | 1103v03 – A.4.1.16 | stmpInGetNexts | |
| | | | 1103v03 – A.4.1.17 | stmpInSetRequests | |
| | | | 1103v03 – A.4.1.18 | stmpInGetResponses | |
| | | | 1103v03 – A.4.1.25 | stmpOutGetRequests | |
| | | | 1103v03 – A.4.1.26 | stmpOutGetNexts | |
| | | | 1103v03 – A.4.1.27 | stmpOutSetRequests | |
| | | | 1103v03 – A.4.1.28 | stmpOutGetResponses | |
| | | | 1103v03 – A.4.1.31 | stmpInSetRequestsNoReply | |
| | | | 1103v03 – A.4.1.32 | stmpInSetResponses | |
| | | | 1103v03 – A.4.1.33 | stmpInErrorResponses | |

© 2023 AASHTO / ITE / NEMA Copy Per RTM Distribution Permission

| Requirements Traceability Matrix (RTM) | | | | | |
|---|---|---|---|---|---|
| **FR ID** | **Functional Requirement** | **Dialog ID** | **Object ID** | **Object Name** | **Additional Specifications** |
| | | | 1103v03 – A.4.1.34 | stmpOutSetRequestsNoReply | |
| | | | 1103v03 – A.4.1.35 | stmpOutSetResponses | |
| | | | 1103v03 – A.4.1.36 | stmpOutErrorResponses | |
| H.1.2.5.2.2 | Monitor STMP Data Exchange Error Requirements | | | | |
| H.1.2.5.2.2.1 | Monitor Incoming and Outgoing STMP Error Exchanges—Too Big Error | G.1 | | | |
| | | | 1103v03 – A.4.1.8 | stmpInTooBigs | |
| | | | 1103v03 – A.4.1.20 | stmpOutTooBigs | |
| H.1.2.5.2.2.2 | Monitor Incoming and Outgoing STMP Error Exchanges—No Such Name | G.1 | | | |
| | | | 1103v03 – A.4.1.9 | stmpInNoSuchNames | |
| | | | 1103v03 – A.4.1.21 | stmpOutNoSuchNames | |
| H.1.2.5.2.2.3 | Monitor Incoming and Outgoing STMP Error Exchanges—Bad Value | G.1 | | | |
| | | | 1103v03 – A.4.1.10 | stmpInBadValues | |
| | | | 1103v03 – A.4.1.22 | stmpOutBadValues | |
| H.1.2.5.2.2.4 | Monitor Incoming and Outgoing STMP Error Exchanges—Read-Only | G.1 | | | |
| | | | 1103v03 – A.4.1.11 | stmpInReadOnlys | |


© 2023 AASHTO / ITE / NEMA

| Requirements Traceability Matrix (RTM) | | | | | |
|---|---|---|---|---|---|
| **FR ID** | **Functional Requirement** | **Dialog ID** | **Object ID** | **Object Name** | **Additional Specifications** |
| | | | 1103v03 – A.4.1.23 | stmpOutReadOnly | |
| H.1.2.5.2.2.5 | Monitor Incoming and Outgoing STMP Error Exchanges—General Error | G.1 | | | |
| | | | 1103v03 – A.4.1.12 | stmpInGenErrs | |
| | | | 1103v03 – A.4.1.24 | stmpOutGenError | |
| | | | 1103v03 – A.4.1.31 | stmpInSetRequestsNoReply | |
| | | | 1103v03 – A.4.1.32 | stmpInSetResponses | |
| | | | 1103v03 – A.4.1.33 | stmpInErrorResponses | |
| | | | 1103v03 – A.4.1.34 | stmpOutSetRequestsNoReply | |
| | | | 1103v03 – A.4.1.35 | stmpOutSetResponses | |
| | | | 1103v03 – A.4.1.36 | stmpOutErrorResponses | |
| H.1.3 | Generic Data Retrieval Requirements | | | | |
| H.1.3.1 | Support Logged Data | | | | |
| H.1.3.1.1 | Retrieve Current Configuration of Logging Service | H.2.1.1 | | | |
| | | | 1103v03 – A.7.3.1 | eventClassNumber | |
| | | | 1103v03 – A.7.3.2 | eventClassLimit | |
| | | | 1103v03 – A.7.3.3 | eventClassClearTime | |

© 2023 AASHTO / ITE / NEMA Copy Per RTM Distribution Permission

| Requirements Traceability Matrix (RTM) | | | | | |
|---|---|---|---|---|---|
| **FR ID** | **Functional Requirement** | **Dialog ID** | **Object ID** | **Object Name** | **Additional Specifications** |
| | | | 1103v03 – A.7.3.4 | eventClassDescription | |
| | | | 1103v03 – A.7.3.6 | eventClassNumEvents | |
| | | | 1103v03 – A.7.5.1 | eventConfigID | |
| | | | 1103v03 – A.7.5.2 | eventConfigClass | |
| | | | 1103v03 – A.7.5.3 | eventConfigMode | |
| | | | 1103v03 – A.7.5.4 | eventConfigCompareValue | |
| | | | 1103v03 – A.7.5.5 | eventConfigCompareValue2 | |
| | | | 1103v03 – A.7.5.6 | eventConfigCompareOID | |
| | | | 1103v03 – A.7.5.7 | eventConfigLogOID | |
| | | | 1103v03 – A.7.5.8 | eventConfigAction | |
| | | | 1103v03 – A.7.5.9 | eventConfigStatus | |
| H.1.3.1.2 | Configure Event Logging Service | H.2.1.2 | | | |
| | | | 1103v03 – A.7.3.1 | eventClassNumber | |
| | | | 1103v03 – A.7.3.2 | eventClassLimit | |
| | | | 1103v03 – A.7.3.3 | eventClassClearTime | |
| | | | 1103v03 – A.7.3.4 | eventClassDescription | |

Copy Per RTM Distribution Permission © 2023 AASHTO / ITE / NEMA

| Requirements Traceability Matrix (RTM) | | | | | |
|---|---|---|---|---|---|
| **FR ID** | **Functional Requirement** | **Dialog ID** | **Object ID** | **Object Name** | **Additional Specifications** |
| | | | 1103v03 – A.7.5.1 | eventConfigID | |
| | | | 1103v03 – A.7.5.2 | eventConfigClass | |
| | | | 1103v03 – A.7.5.3 | eventConfigMode | |
| | | | 1103v03 – A.7.5.4 | eventConfigCompareValue | |
| | | | 1103v03 – A.7.5.5 | eventConfigCompareValue2 | |
| | | | 1103v03 – A.7.5.6 | eventConfigCompareOID | |
| | | | 1103v03 – A.7.5.7 | eventConfigLogOID | |
| | | | 1103v03 – A.7.5.8 | eventConfigAction | |
| | | | 1103v03 – A.7.5.9 | eventConfigStatus | |
| H.1.3.1.3 | Retrieve Event Logged Data | H.2.1.3 | | | |
| | | | 1103v03 – A.7.3.1 | eventClassNumber | |
| | | | 1103v03 – A.7.3.5 | eventClassNumRowsInLog | |
| | | | 1103v03 – A.7.3.6 | eventClassNumEvents | |
| | | | 1103v03 – A.7.7 | eventLogTable | |
| | | | 1103v03 – A.7.7.1 | eventLogClass | |
| | | | 1103v03 – A.7.7.2 | eventLogNumber | |

© 2023 AASHTO / ITE / NEMA Copy Per RTM Distribution Permission

| Requirements Traceability Matrix (RTM) | | | | | |
|---|---|---|---|---|---|
| **FR ID** | **Functional Requirement** | **Dialog ID** | **Object ID** | **Object Name** | **Additional Specifications** |
| | | | 1103v03 – A.7.7.3 | eventLogID | |
| | | | 1103v03 – A.7.7.4 | eventLogTime | |
| | | | 1103v03 – A.7.7.5 | eventLogValue | |
| | | | 1103v03 – A.7.8 | numEvents | |
| H.1.3.1.4 | Configure Clearing of Event Class Log | H.2.7 | | | |
| | | | 1103v03 – A.7.2 | maxEventClasses | |
| | | | 1103v03 – A.7.3 | eventClassTable | |
| | | | 1103v03 – A.7.3.1 | eventClassNumber | |
| | | | 1103v03 – A.7.3.3 | eventClassClearTime | |
| H.1.3.1.5 | Determine Capabilities of Event Logging Service | G.1 | | | |
| | | | 1103v03 – A.7.2 | maxEventClasses | |
| | | | 1103v03 – A.7.4 | maxEventLogConfigs | |
| | | | 1103v03 – A.7.6 | maxEventLogSize | |
| H.1.3.1.6 | Determine Number of Logged Events per Event Class | H.2.6 | | | |
| | | | 1103v03 – A.7.2 | maxEventClasses | |
| | | | 1103v03 – A.7.3 | eventClassTable | |

Copy Per RTM Distribution Permission © 2023 AASHTO / ITE / NEMA

| Requirements Traceability Matrix (RTM) | | | | | |
|---|---|---|---|---|---|
| **FR ID** | **Functional Requirement** | **Dialog ID** | **Object ID** | **Object Name** | **Additional Specifications** |
| | | | 1103v03 – A.7.3.1 | eventClassNumber | |
| | | | 1103v03 – A.7.3.5 | eventClassNumRowsInLog | |
| | | | 1103v03 – A.7.3.6 | eventClassNumEvents | |
| H.1.3.1.7 | Support a Number of Events to Store in Log | | | | See Requirement H.1.3.1.7 in PRL. |
| H.1.3.1.8 | Configure Clearing of Global Log | G.3 | | | |
| | | | 1103v03 – A.9.5.3 | eventClearLog | |
| H.1.3.1.9 | Determine Total Number of Logged Events | G.1 | | | |
| | | | 1103v03 – A.7.3.1 | eventClassNumber | |
| | | | 1103v03 – A.7.3.5 | eventClassNumRowsInLog | |
| | | | 1103v03 – A.7.3.6 | eventClassNumEvents | |
| | | | 1103v03 – A.7.8 | numEvents | |
| H.1.3.1.10 | Determine Number of Events Within a Class | G.1 | | | |
| | | | 1103v03 – A.7.3.1 | eventClassNumber | |
| | | | 1103v03 – A.7.3.5 | eventClassNumRowsInLog | |
| | | | 1103v03 – A.7.3.6 | eventClassNumEvents | |
| | | | 1103v03 – A.7.8 | numEvents | |
| H.1.3.1.11 | Determine Event Logging Resolution | H.2.6 | | | |

© 2023 AASHTO / ITE / NEMA Copy Per RTM Distribution Permission

| Requirements Traceability Matrix (RTM) | | | | | |
|---|---|---|---|---|---|
| **FR ID** | **Functional Requirement** | **Dialog ID** | **Object ID** | **Object Name** | **Additional Specifications** |
| | | | 1103v03 – A.7.6 | maxEventLogSize | |
| | | | 1103v03 – A.7.7 | eventLogTable | |
| | | | 1103v03 – A.7.7.1 | eventLogClass | |
| | | | 1103v03 – A.7.7.6 | eventLogTimeMilliseconds | |
| H.1.3.1.12 | Clear Event Configuration | G.3 | | | |
| | | | 1103v03 – A.9.5.2 | eventClearConfiguration | |
| H.1.3.1.13 | Clear Event Classes | G.3 | | | |
| | | | 1103v03 – A.9.5.1 | eventClearClasses | |
| H.1.3.1.14 | Clear Event Class Log | H.2.7 | | | |
| | | | 1103v03 – A.7.2 | maxEventClasses | |
| | | | 1103v03 – A.7.3 | eventClassTable | |
| | | | 1103v03 – A.7.3.1 | eventClassNumber | |
| | | | 1103v03 – A.7.3.3 | eventClassClearTime | |
| H.1.3.1.15 | Retrieve Non-Sequential Clock Changes | H.2.1.3 | | | See 4.3.3. |
| | | | 1103v03 – A.7.3.1 | eventClassNumber | |
| | | | 1103v03 – A.7.3.5 | eventClassNumRowsInLog | |
| | | | 1103v03 – A.7.3.6 | eventClassNumEvents | |

Copy Per RTM Distribution Permission
© 2023 AASHTO / ITE / NEMA

| Requirements Traceability Matrix (RTM) | | | | | |
|---|---|---|---|---|---|
| **FR ID** | **Functional Requirement** | **Dialog ID** | **Object ID** | **Object Name** | **Additional Specifications** |
| | | | 1103v03 – A.7.7 | eventLogTable | |
| | | | 1103v03 – A.7.7.1 | eventLogClass | |
| | | | 1103v03 – A.7.7.2 | eventLogNumber | |
| | | | 1103v03 – A.7.7.3 | eventLogID | |
| | | | 1103v03 – A.7.7.4 | eventLogTime | |
| | | | 1103v03 – A.7.7.5 | eventLogValue | |
| | | | 1103v03 – A.7.8 | numEvents | |
| | | | 5.4.22.6 | unitTimeNonSequentialSource | |
| | | | 5.4.22.7 | unitTimeNonSequentialChange | |
| | | | 5.4.22.8 | unitTimeNonSequentialDelta | |
| H.1.3.2 | Supplemental Requirements for Event Monitoring | | | | |
| H.1.3.2.1 | Record and Timestamp Events | | | | |
| H.1.3.2.2 | Support a Number of Event Classes | | | | See Requirement H.1.3.2.2 in PRL. |
| H.1.3.2.3 | Support a Number of Events to Log | | | | See Requirement H.1.3.2.3 in PRL. |
| H.1.3.2.4 | Support Monitoring of Event Type Requirements | | | | |
| H.1.3.2.4.1 | Support On-Change Events | | | | See 1103v03 – A.7.5.3. |
| H.1.3.2.4.2 | Support Greater Than Events | | | | See 1103v03 – A.7.5.3. |
| H.1.3.2.4.3 | Support Less Than Events | | | | See 1103v03 – A.7.5.3. |

© 2023 AASHTO / ITE / NEMA Copy Per RTM Distribution Permission

| Requirements Traceability Matrix (RTM) | | | | | |
|---|---|---|---|---|---|
| **FR ID** | **Functional Requirement** | **Dialog ID** | **Object ID** | **Object Name** | **Additional Specifications** |
| H.1.3.2.4.4 | Support Hysteresis Events | | | | See 1103v03 – A.7.5.3. |
| H.1.3.2.4.5 | Support Periodic Events | | | | See 1103v03 – A.7.5.3. |
| H.1.3.2.4.6 | Support Bit Flag Events | | | | See 1103v03 – A.7.5.3. |
| H.1.3.2.4.7 | Support Event Monitoring on Any Data | | | | |
| H.1.4 | Generic Control Requirements | | | | |
| H.1.4.1 | Control External Device | H.2.7 | | | |
| | | | 1201v02 – 2.8.3.1 | auxIOPortType | |
| | | | 1201v02 – 2.8.3.2 | auxIOPortNumber | |
| | | | 1201v02 – 2.8.3.5 | auxIOPortValue | |
| H.1.4.2 | Control Database Operation Requirements | | | | |
| H.1.4.2.1 | Control Database Access | G.3 | | | |
| | | | 1201v03 – 2.3.1 | dbCreateTransaction | |
| H.1.4.2.2 | Perform Database Consistency Check | 4.2.2 | | | |
| | | | 1201v03 – 2.3.1 | dbCreateTransaction | |
| | | | 1201v03 – 2.3.6 | dbVerifyStatus | |
| | | | 1201v03 – 2.3.7 | dbVerifyError | |
| H.1.4.2.3 | Enforce Consistency Check Parameters | 4.2.2 | | | |
| | | | 1201v03 – 2.3.1 | dbCreateTransaction | |
| | | | 1201v03 – 2.3.6 | dbVerifyStatus | |
| | | | 1201v03 – 2.3.7 | dbVerifyError | |

Copy Per RTM Distribution Permission
© 2023 AASHTO / ITE / NEMA

| Requirements Traceability Matrix (RTM) | | | | | |
|---|---|---|---|---|---|
| **FR ID** | **Functional Requirement** | **Dialog ID** | **Object ID** | **Object Name** | **Additional Specifications** |
| H.1.5 | Generic Performance Requirements | | | | |
| H.1.5.1 | Atomic Operations | | | | |
| | | | | | |

© 2023 AASHTO / ITE / NEMA
Copy Per RTM Distribution Permission

# Annex B
# Object Tree [Informative]

Figure 10 and Figure 11 provide a pictorial representation of the Actuated Signal Controller Object Tree Structure.

The tree structure identifies how the object definitions are combined under specific nodes.

**Figure 10 Object Tree for NTCIP 1202 v03B (Continued in Figure 11)**

Copy Per RTM Distribution Permission © 2023 AASHTO / ITE / NEMA

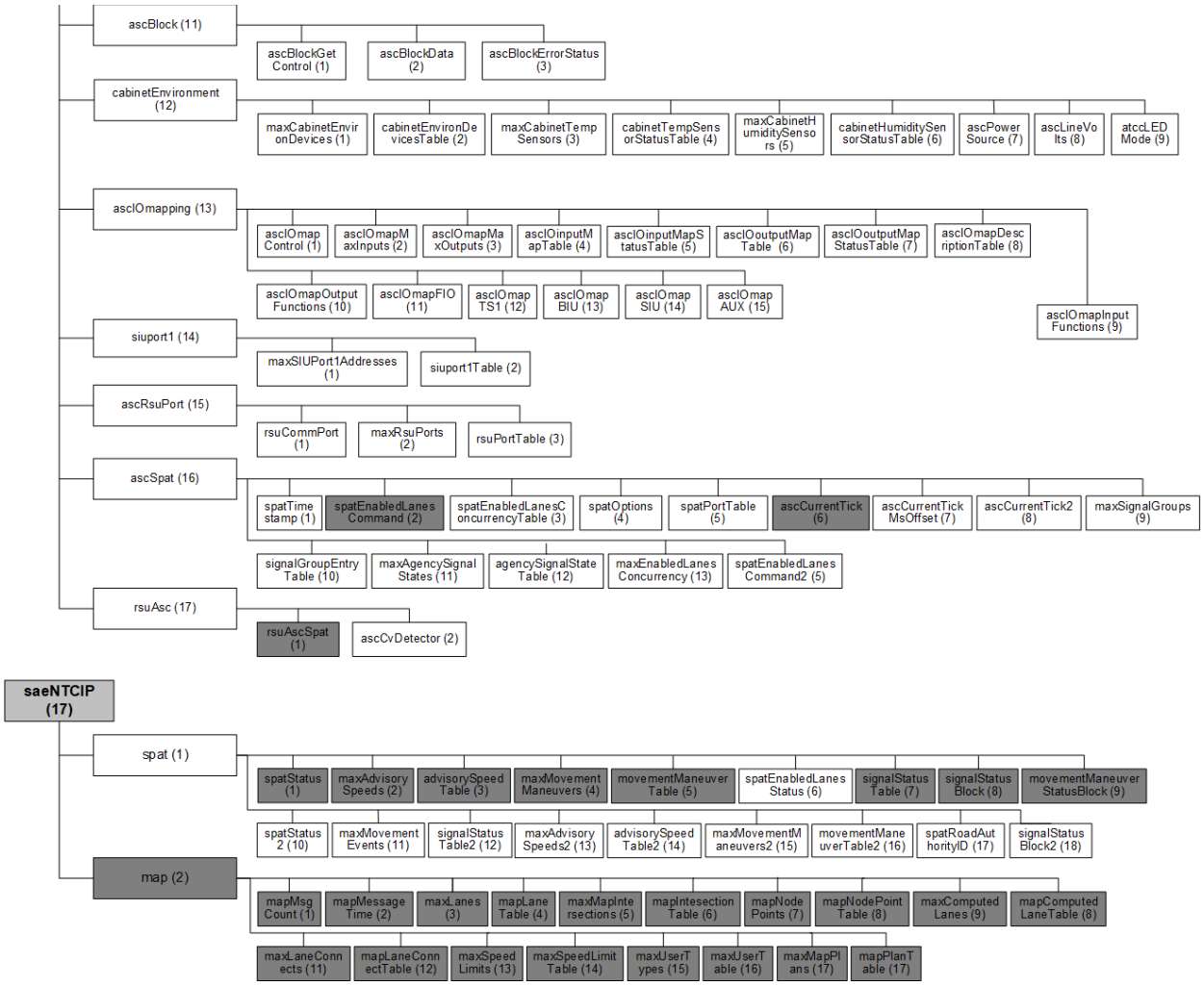


**Figure 11 Object Tree for NTCIP 1202 v03B (Continued)**

© 2023 AASHTO / ITE / NEMA
Copy Per RTM Distribution Permission

# Annex C
# Test Procedures [Normative]

It is anticipated that Test Procedures may be developed as part of a future revision of NTCIP 1202 v03. Annex C is a placeholder, at present.

Copy Per RTM Distribution Permission © 2023 AASHTO / ITE / NEMA

# Annex D
# Documentation of Revisions [Informative]

Annex D identifies the changes that have been made to NTCIP 1202 v03. The NTCIP effort makes reasonable efforts to ensure that standards are as backward compatible as possible, but the primary purpose of NTCIP 1202 v03 is to provide interoperability by developing standards in a consensus environment. When changes are required to meet these objectives, the problematic objects are refined (if the issue is primarily editorial) or deprecated and, in most cases, replaced with new objects. Annex D identifies why each of these changes has been made. New implementations should support the new/replacement objects; they may also support deprecated objects.

## D.1 NTCIP 1202 v02 to NTCIP 1202 v03

The following identify changes that were made from NTCIP 1202 v02 to NTCIP 1202 v03.

### D.1.1 Added Systems Engineering Process

The major change is the structure of the document. NTCIP 1202 v03 adds systems engineering process (SEP) content defined in NTCIP 8002, Annex B1, version 01, which was published in September 2016. The SEP includes the definition of the user needs, functional requirements, dialogs, and a requirements traceability matrix in addition to the already existing management information base (MIB). The conformance group definitions and the conformance statement contained in Version 2 of this standard were replaced by the Protocol Requirements List (Section 3), which allows a user to specify which functions are supposed to be supported by an ASC.

### D.1.2 General MIB Changes

General edits were made to the MIB header in NTCIP 1202 v03 to reflect updates to other MIBs from which the NTCIP 1202 v03 MIB imports data.

All DESCRIPTION fields were updated to conform to NTCIP 8004 v02. Additionally, many DESCRIPTION fields have received additional clarifications and explanations to remove ambiguities.

The STATUS of all objects was changed to "mandatory" to reflect that conformance for NTCIP 1202 v03 is now measured through the use of the PRL as contained in Section 3 and the RTM contained in Annex A.

References to objects defined in NTCIP 1201 are now made through the RTM rather than through comments in the MIB.

Default values (DEFVAL) were added to certain object definitions (e.g., status objects, control objects).

Several objects were added to reflect new user needs.

### D.1.3 New User Needs

In addition to the systems engineering content (user needs, requirements) developed that trace to existing objects in NTCIP 1202 v02, new user needs were defined and supported in NTCIP 1202 v03. From these new user needs, new requirements and design content (in the form of dialogs and object definitions) were developed and included in NTCIP 1202 v03. The following identifies these new user needs supported.

© 2023 AASHTO / ITE / NEMA Copy Per RTM Distribution Permission

#### D.1.3.1 Added Support for Connected Vehicle Environment

NTCIP 1202 v03 supports a new user need to provide a standardized way to exchange signal phasing and timing data (SPaT) and MAP (roadway geometry) data, and support the presence of connected devices with a Roadside Unit (RSU) in a connected vehicle environment. This user need includes support to manage the interface between an ASC and an RSU.

#### D.1.3.2 Added Support to Manage the Cabinet Environment

NTCIP 1202 v03 supports a new user need to provide a standardized way to monitor and manage the operating environment that the ASC is located in. The operating environment includes the temperature and humidity within the ASC cabinet, the status of the cabinet doors (open or closed), and if the cabinet is flooding.

#### D.1.3.3 Added Support to Manage the Power Sources

NTCIP 1202 v03 supports a new user need to provide a standardized way to monitor and manage the power sources for the ASC.

#### D.1.3.4 Added Support to Retrieve Operational Performance Data

NTCIP 1202 v03 supports a new user need to provide a standardized way to manage and retrieve the collection of signal operations and detector data for the analysis of signal timing efficacy. An example of this operational data is the Indiana Traffic Signal Hi Resolution Data Logger Enumerations.

#### D.1.3.5 Added Support to Manage I/O Mapping

NTCIP 1202 v03 supports a new user need to provide a standardized way to manage and retrieve the Input/Output mapping for the ASC. The user need also allows a manager to reset the input/output mapping to a default configuration.

#### D.1.3.6 Added Support for Accessible Pedestrian Signals (APS)

NTCIP 1202 v03 supports a new user need to support the configuration of APS push buttons.

#### D.1.3.7 Added Support to Activate an Action Plan

NTCIP 1202 v03 supports a new user need to provide a standardized way to call a pre-configured action plan. In NTCIP 1202 v02, each action plan defines a group of functions, such as activating an output, that may be activated from a scheduler. NTCIP 1202 v03 extends this feature so the action plan may be manually called outside the scheduler.

#### D.1.3.8 Added Support to Manually Advance the Controller Remotely

NTCIP 1202 v03 supports a new user need to provide a standardized way to remotely and manually advance the ASC through the phase or interval.

#### D.1.3.9 Added Support for Condition-Based Exception Reporting

NTCIP 1202 v03 supports a new user need to provide a standardized way to manage exception-based reporting for the ASC. Under this scenario, a manager can configure an ASC to automatically transmit data to a management station when specific conditions are satisfied.

Copy Per RTM Distribution Permission © 2023 AASHTO / ITE / NEMA

### D.1.4 New Requirements

In addition to new requirements and objects to support the user needs expressed in Annex D.1.3, new requirements (and objects) were added to extend user needs already supported in NTCIP 1202 v02. The following identifies these new requirements and user needs supported in NTCIP 1202 v03.

#### D.1.4.1 Manage ASC Location

NTCIP 1202 v03 adds requirements to manage the location of the ASC.

#### D.1.4.2 Manage Communications Ports

NTCIP 1202 v03 adds requirements to manage the communications ports on the ASC.

#### D.1.4.3 Manage ASC Clock

NTCIP 1202 v03 adds requirements to manage the clock of an ASC.

#### D.1.4.4 Manage User-Defined Backup Time

NTCIP 1202 v03 adds requirements to configure a user-defined backup time, based on user-defined functions in addition to the existing backup time defined in NTCIP 1202 v02. The backup time defines the period of time to be exceeded when no SET operations are received for a set of system control parameters before the ASC reverts to Backup Mode. The set of system control parameters are defined in NTCIP 1202 v02 for the existing backup time, and is user defined for the user-defined backup time.

#### D.1.4.5 Support for Advanced Warning Signal Indications

NTCIP 1202 v03 adds requirements to support warnings in advance of a green or red signal indication for a phase.

#### D.1.4.6 Support for Phase Maximum 3

NTCIP 1202 v03 adds requirements to support a Phase Maximum 3 mode, which has a range from 0 to 6000 seconds.

#### D.1.4.7 Support for Bicycle Phases

NTCIP 1202 v03 adds requirements to support bicycle phases for the ASC.

#### D.1.4.8 Support for Transit Phases

NTCIP 1202 v03 adds requirements to support transit phases for the ASC.

#### D.1.4.9 Manage Alternate Times for Transitions

NTCIP 1202 v03 adds requirements to manage alternate minimum times that can be used during transitions.

#### D.1.4.10 Manage Coordination Point

NTCIP 1202 v03 adds requirements to manage the coordination point for the unit and for a specific pattern for the ASC.

© 2023 AASHTO / ITE / NEMA Copy Per RTM Distribution Permission

#### D.1.4.11 Support for Additional Overlaps

NTCIP 1202 v03 adds support for several additional overlap configurations, including for flashing yellow arrows, flashing red arrows, and transit-specific overlaps.

#### D.1.4.12 Manage Preempt Exit Strategy

NTCIP 1202 v03 adds requirements to manage the exit strategy out of a preempt sequence.

#### D.1.4.13 Manage Additional Alarms

NTCIP 1202 v03 adds requirements to configure and monitor additional alarms for the ASC.

#### D.1.4.14 Support for Paired Detectors

NTCIP 1202 v03 adds requirements to support paired detectors (e.g., speed traps) for the ASC.

#### D.1.4.15 Improved Support for Vehicle Detectors

NTCIP 1202 v03 adds requirements to improve support for vehicle detectors for the ASC. Examples include support to define average vehicle lengths, collect speed data, define detector types, data collection periods up to 3600 seconds, and data collection periods based on the current cycle length (instead of a fixed period).

#### D.1.4.16 Improved Support for Pedestrian Detectors

NTCIP 1202 v03 adds requirements to improve support for detector data for the ASC. Examples include support to reset a pedestrian detector, define a pedestrian pushbutton for accessible pedestrian signal (APS) features, monitor pedestrian detector status, and generate pedestrian detector reports.

#### D.1.4.17 Block Objects for New NTCIP 1202 v03 Objects

NTCIP 1202 v03 adds new block objects to support the new object definitions added in NTCIP 1202 v03.

### D.1.5 Changes to Existing Objects

In addition, new enumerations were added to several existing object definitions in NTCIP 1202 v02. The following identifies the new enumerations supported in NTCIP 1202 v03.

#### D.1.5.1 Additional Coordination Correction Mode

NTCIP 1202 v03 adds an enumeration for a subtractOnly mode for the coordCorrectionMode object. This mode support coordination correction by subtracting only from the timings.

## D.2 NTCIP 1202 v03 to NTCIP 1202 v03A

Updated with errata for Flashing Yellow Arrow (FYA) functionality described in Sections 5.9.2.7, 7.2.5.3, 7.2.5.11, and 7.2.7.1.

## D.3 NTCIP 1202 v03A to NTCIP 1202 v03B

The following identify changes that were made from NTCIP 1202 v02 to NTCIP 1202 v03.

Copy Per RTM Distribution Permission © 2023 AASHTO / ITE / NEMA

### D.3.1 Fixes to RTM

Following the City of Anaheim's testing of NTCIP 1202, numerous errors were discovered with the RTM in NTCIP 1202 v03A. The following errors were corrected in NTCIP 1202 v03B.

- 3.5.1.3.7 Configure ASC Temperature Threshold is updated to follow the H.2.7 dialog instead of the H.2.5 dialog.
- 3.5.1.3.8 Configure ASC Humidity Thresholds is updated to follow the H.2.7 dialog instead of the H.2.5 dialog.
- 3.5.2.1.2.1.51 Configure Flashing Yellow Arrow Associated Vehicle Phase is updated to follow the 4.2.2 dialog instead of the H.2.7 dialog.
- 3.5.2.1.2.1.52 Configure Flashing Red Arrow Associated Vehicle Phase is updated to follow the 4.2.2 dialog instead of the H.2.7 dialog.
- 3.5.2.1.4.1.5 Configure Pattern Maximum Mode is updated to not specify any bits as patternOptions is an enumerated object.
- 3.5.2.1.8.1 Configure Overlap Type Requirements are updated with the correct enumerations and object traceability.
- Several requirements that reference the preemptTable are updated to follow the 4.2.2 dialog instead of the H.2.7 dialog. The requirements are:
    - 3.5.2.1.9.1.12-3.5.2.1.9.1.15
    - 3.5.2.1.9.1.17-3.5.2.1.9.1.21
    - 3.5.2.1.9.1.28
    - 3.5.2.1.9.1.34

### D.3.2 Deprecated User Needs

#### D.3.2.1 Connected Vehicle Manager—Management Station – CV Roadside Process Interface

NTCIP 1202 v03B deprecates user need 2.5.4.2 Connected Vehicle Manager: Management Station – CV Roadside Process Interface and all of its subsequent user needs. These needs are superseded by NTCIP 1218.

### D.3.3 New Requirements

New requirements and objects to support the user needs are expressed in Annex D.3.3. The following identifies these new requirements and user needs supported in NTCIP 1202 v03.

#### D.3.3.1 Support SNMP Conformance Group

NTCIP 1202 v03B adds requirements to support the SNMP Conformance Group that was mandatory in NTCIP 1202 v02 and missed in 1202 v03.

#### D.3.3.2 Support Cabinet Flash

NTCIP 1202 v03B adds a requirement that allows an ASC to know how a cabinet is wired to flash.

#### D.3.3.3 Support Unit Coordination Point

NTCIP 1202 v03B adds a requirement that was missed in NTCIP 1202 v03 to support the Coordination Point being the unitCoordSyncPoint object.

#### D.3.3.4 Support Minus Green Yellow Alternate Overlap

NTCIP 1202 v03B adds a requirement that was missed in NTCIP 1202 v03 to support the Overlap Type being minusGreenYellowAlternate.

© 2023 AASHTO / ITE / NEMA Copy Per RTM Distribution Permission

#### D.3.3.5 Support Preempt Gate Description Configuration

NTCIP 1202 v03B adds a requirement to allow the preemptGateDescription object to be SET. Note: preemptGateDescription has been changed to read-write.

#### D.3.3.6 Configure Intersection Identifier

NTCIP 1202 v03B deprecates 3.5.4.1.3.2 Retrieve Intersection Identifier and adds new requirements, 3.5.4.1.3.17.2, Configure Signal Group Intersection Mapping, which allow the intersection identifier to be configured. Requirement 3.5.4.1.3.11, Configure Road Authority, allows the road authority identifier to be configured.

#### D.3.3.7 New SPaT Requirements to Support CTI 4501

To support conformance to CTI 4501, NTCIP 1202 v03B adds several new requirements. These requirements include:

- Indicating SPaT data as invalid.
- Providing SPaT data about the next movement.
- Providing more details regarding SPaT data broadcasted to other connected devices.

#### D.3.3.8 Security

NTCIP 1202 v03B adds new security requirements, including support for DTLS.

### D.3.4 Deprecated Requirements

NTCIP 1202 v03B deprecates several requirements as follows:

#### D.3.4.1 Drop Support for Management Station – CV Roadside Process Interface

NTCIP 1202 v03B deprecates requirements for the interface between a management station and a CV Roadside Process Interface. These requirements are superseded by NTCIP 1218. The following requirements are deprecated.

- 3.5.4.2 Manage Management Station – CV Roadside Process Interface Requirements and all its subsequent requirements

#### D.3.4.2 Drop Support for RSU SNMP Managers

NTCIP 1202 v03B deprecates requirements for the RSU. The ASC Working Group came to a consensus that the ASC shall act as the SNMP manager. The following requirements are deprecated, as they were written for RSUs acting as SNMP managers.

- 3.5.4.3.1.2 Retrieve Current and Next Movement Information Requirements and all its subsequent requirements.
- 3.5.4.3.2.2 Retrieve Movement Next Occurrence.
- 3.5.4.3.3.2 Provide Connected Devices Presence Information Requirements and all its subsequent requirements.
- 3.5.4.3.4.2 Provide Roadway Geometry Plan Requirements and all its subsequent requirements.
- 3.6.3.3 SPaT-data Request Transmission Rate.
- 3.6.3.4 Condition-based SPaT Maximum Transmission Start Time.

Copy Per RTM Distribution Permission © 2023 AASHTO / ITE / NEMA

# Annex E
# User Requests

Annex E identifies features that were suggested for NTCIP 1202 v03, but are either supported by mechanisms that may not be readily obvious, or are not supported by NTCIP 1202 v03.

## E.1 Features Not Supported by This Version

Features considered for inclusion in NTCIP 1202 v03 but not included are as follows:

### E.1.1 Interval-Based Controllers

The NTCIP ASC Working Group (WG) considered including support for interval-based controllers (see Section 2.3.2) in NTCIP 1202 v03, but due to time and schedule considerations, this was deferred to a future version of NTCIP 1202. User needs and requirements were developed for interval-based controllers, and draft design content to fulfill some of the requirements for interval-based controllers but are not included in NTCIP 1202 v03. The developed content has been saved by NTCIP for consideration for future versions of NTCIP 1202.

### E.1.2 Non-Persistent Timing Patterns

The NTCIP ASC WG considered including support for non-persistent traffic patterns in NTCIP 1202 v03, but due to time and schedule considerations, this was deferred to a future version of NTCIP 1202. Non-persistent timing patterns are temporary timing patterns that are not retained in the ASC through a power loss. User needs were developed to support non-persistent traffic patterns but are not included in NTCIP 1202 v03.

### E.1.3 Traffic Adaptive Algorithm

The NTCIP ASC WG considered including support for traffic adaptive strategies in NTCIP 1202 v03, but due to time and schedule considerations, this was deferred to a future version of NTCIP 1202. Traffic adaptive algorithms are used to continuously adjust the signal timing pattern (cycle, offset, and splits) based on traffic demand as determined by detector inputs and other inputs, such as from an adjacent signalized intersection. User needs and requirements were developed to support traffic adaptive strategies but are not included in NTCIP 1202 v03. The developed content has been saved by NTCIP for consideration for future versions of NTCIP 1202.

### E.1.4 Peer-to-Peer

The NTCIP ASC WG considered including support for peer-to-peer communications in NTCIP 1202 v03, but due to time and schedule considerations and complexity of the topic, this was deferred to a future version of NTCIP 1202. User needs, requirements, and draft design content were developed to support peer-to-peer communications but are not included in NTCIP 1202 v03. The developed content has been saved by NTCIP for consideration for future versions of NTCIP 1202.

### E.1.5 Signal Control Priority

The NTCIP ASC WG considered including support for signal control priority, including for a connected vehicle environment, in NTCIP 1202 v03, but the ASC WG decided that the user needs, requirements and design were better handled by the Signal Control and Priority (SCP) WG. During the development phase, the ASC WG identified several new requirements related to signal control priority, especially as it

© 2023 AASHTO / ITE / NEMA Copy Per RTM Distribution Permission

relates to the connected vehicle environment. New design content was also developed to support most of the new requirements. These new requirements and design content have been saved by NTCIP and provided to the SCP WG for consideration for future versions of NTCIP 1211.

### E.1.6 Additional Support for ADA

The NTCIP ASC WG considered including support for ADA pedestrians using non-visual formats, such as audible tones, verbal messages, and/or vibrating surfaces, but due to time and schedule considerations, this was deferred to a future version of NTCIP 1202. User needs, requirements, and draft design content were developed to support non-visual formats, but consensus was not reached on the design content, and there were higher priority user needs. The developed content has been saved by NTCIP for consideration for future versions of NTCIP 1202.

### E.1.7 Programmable Logic Gates and Functions

The NTCIP ASC WG considered and developed user needs, requirements, and system detailed design (SDD) to support programmable logic functions and gates. However, following the User Comment period, the ASC WG agreed to remove programmable logic functions and gates. While the proposed NTCIP 1202 v03 design incorporated most of the desired functions, custom and unique functions and operations (that were not addressed by the proposed SDD) already exist and are implemented. For that reason, non-NTCIP-standardized objects are still needed and used. In this instance, standardizing programmable logic and gates in NTCIP 1202 v03 offered little benefit to managing this functionality. A Section 3.3.2.1 provision was added to require the provision of a proprietary MIB for ASC devices that wish to claim conformance to NTCIP 1202 v03.

### E.1.8 Advanced Preempt Inputs

The NTCIP ASC WG considered support for advanced preempt inputs, such as provided by IEEE 1570, but due to time and schedule considerations and complexity of the topic, this was deferred to a future version of NTCIP 1202.

### E.1.9 Conflict Monitoring Unit and Channel Support

With the advent of more than 16 channels, the NTCIP ASC WG considered adding support to allow mapping of channel outputs to a Conflict Monitoring Unit (CMU) and to allow external devices, such as video detection or audible pedestrian devices, to monitor the CMU for channel status. The NTCIP ASC WG agreed it did not have sufficient time to properly consider the proper solutions.

### E.1.10 Traffic Signal Controller Broadcast Message (TSCBM)

NTCIP 1202 v02 did not include an interface between the ASC and the RSU. To support early deployments, a Traffic Signal Controller Broadcast Message (TSCBM) was developed using a Systems Engineering Process (SEP) under USDOT Contract No. DTFH61-06-D-00007 to allow an ASC to provide the signal controller data necessary for an RSU to create and broadcast a SPaT message. During the transitional period while the SPaT design elements (dialogs and data objects) in NTCIP 1202 v03 are being implemented and verified, the TSCBM is allowed as an alternative solution if implemented as follows:

a) The ASC is required to broadcast TSCBM to the RSU using the message structure defined in Table 3-4 of the V2I Hub Interface Control Document (ICD) dated March 2017 (see Section 1.2.2); and
b) The ASC is required to broadcast the TSCBM to the RSU at a rate of once per 100 milliseconds continually without interruption.

The TSCBM is not recommended for new designs.

Copy Per RTM Distribution Permission © 2023 AASHTO / ITE / NEMA

### E.1.11 startTime [Deprecated]

While developing the support for the connected vehicle environment, the ASC WG intended to support all mandatory and optional elements of the SAE J2735 SPaT message. However, the optional startTime data within the data frame DF_TimeChangeDetails is not supported in NTCIP 1202 v03. The ASC WG reviewed the definition of startTime and was unable to unambiguously determine a use case for and agree on the proper usage and intent of startTime. Also, there was no known implementation of startTime at the time in the United States. Thus, the ASC WG agreed not to include support for startTime in NTCIP 1202 v03.

### E.1.12 ECLA

The ASC WG considered if the ASC or an External Control Local Application (ECLA) should be responsible for generating the SPaT data needed for a J2735 SPaT message. Contrary to CTI 4501, the ASC WG believes that the controller needs to provide the SPaT data because the controller ultimately controls the signal phases and timing for the signalized intersection (except for cabinet flash). The ASC WG agreed that exchanging data between the controller and the ECLA are needed to properly support the generation of SPaT data, such as the ECLA providing the minimum and maximum end times. However, due to time and schedule considerations, the requirements and design to support these data exchanges are deferred to a future version of NTCIP 1202.

### E.1.13 LikelyTime

The likelyTime defines the most likely point in time when a signal group will terminate its current movement phase state. The ASC WG considered a proposal that likelyTime be calculated as the current time plus the average interval duration for the current interval over the last three (3) cycles, since traffic demand does not always vary greatly from cycle to cycle.

### E.1.14 Advisory Speed by Lane

The ASC WG considered a proposal that the RSU should populate the J2735 message by repeating the same advisory speed for each movement event associated with the signal group, since NTCIP only provides the advisory speeds at the signal group (channel) level.

- Recommend conferring with TOSCo and any others that are providing Eco-Driving to see if it is necessary to change NTCIP 1202 to provide advisory speeds at the movement event (interval) level, like J2735 does, rather than only at the signal group (channel) level.
- Note: TOSCo provides on a per lane basis – provide a green window.

### E.1.15 Assured Green Period

The ASC WG considered and developed user needs and requirements to support Assured Green Period, as defined in CTI 4501. However, due to schedule constraints and an upcoming project to develop the Assured Green Period concept, the ASC WG agreed to defer the user needs and requirements to a future version of NTCIP 1202. The new user needs and requirements have been saved by NTCIP for consideration for future versions of NTCIP 1202.

### E.1.16 Enabled Lanes During Preemption

The ASC WG considered requirements to support enabling lanes during a preempt, particularly to indicate no right turn on red is permitted during railroad preempts.

© 2023 AASHTO / ITE / NEMA Copy Per RTM Distribution Permission

### E.1.17 MAP Consistency Code

The ASC WG deprecated several requirements regarding the configuration of a MAP Message. These requirements are superseded by NTCIP 1218. The ASC WG needs more input from RSU vendors regarding how to do checksums.

### E.1.18 Maneuver by Lane

NTCIP 1202 v03 is designed to be compatible with SAE J2735 and as a result considers maneuvers by movements. It was requested to add a requirement to support maneuvers by lane.

### E.1.19 RSU Virtual Detectors

NTCIP 1202 v03 currently does not support inputs from virtual detectors that may be used by the RSU (e.g., use of the Basic Safety Message).

### E.1.20 Support for DTLS

The ASC WG considered utilization of the Datagram Transport Layer Security (DTLS) Protocol Version 1.3 to protect all communications between the ASC and the RSU, with the exception that if a standardized interaction explicitly identified in this standard does not support the use of DTLS 1.3, then a different security protocol shall be used for that interaction. At the time of publication, the Base Standards and Protocols 2 Working Group (BSP2 WG) was considering recommendations for security, so this topic was deferred. The new user needs and requirements have been saved by NTCIP for consideration for future versions of NTCIP 1202.

## E.2 Recommendations to NTCIP 1218 Roadside Unit Working Group

The ASC Working Group recommends that the Roadside Unit (RSU) Working Group consider the following objects to support the exchange of SPaT data.

```
--5.22 Data Exchanges with Actuated Signal Controllers
rsuAscData OBJECT IDENTIFIER ::= {rsu 21}

--5.22.1 ASC Current Tick Counter
rsuAscCurrentTick  OBJECT-TYPE
      SYNTAX      Integer32 (0..36111)
      MAX-ACCESS  read-write
      STATUS      current
      DESCRIPTION "<Definition> This object is a counter of the number of
            elapsed ASC traffic processing ticks. The value is incremented by
            1 (decisecond) every time the ASC completes its tenth of a second
            processing and commits a new set of IO signal states.

            The object is represented as a rolling counter with a zero
            representing the top of the hour. If the counter were to be
            incremented beyond 35999, unless a leap seconds occur, the value
            shall roll over back to 0. The values 36000..36009 are used when
            a leap second occurs. The values 36010..36110 are reserved for
            future use. 36111 is to be used when the value is undefined or
            unknown.
      <Object Identifier> 1.3.6.1.4.1.1206.4.2.18.21.1"
      REFERENCE "NTCIP 1202 ascCurrentTick2 & SAE J2735 DE_TimeMark"
::= { rsuAscData 1 }

--5.22.2 Maximum Number of Signal Groups
```

 © 2023 AASHTO / ITE / NEMA

```
maxRsuSignalGroups  OBJECT-TYPE
      SYNTAX      Integer32 (2..255)
      MAX-ACCESS  read-only
      STATUS      current
      DESCRIPTION "<Definition> This object indicates the maximum number of
            signal groups that RSU may receive data from an ASC for.
      <Object Identifier> 1.3.6.1.4.1.1206.4.2.18.21.2"
::= { rsuAscData 2 }

--5.22.3 Maximum Number of Movement Events
maxRsuMovementEvents  OBJECT-TYPE
      SYNTAX      Integer32 (2..16)
      MAX-ACCESS  read-only
      STATUS      current
      DESCRIPTION "<Definition> This object indicates the maximum number of
            movement events for a signal group that RSU may receive data from
            an ASC for.
      <Object Identifier> 1.3.6.1.4.1.1206.4.2.18.21.3"
::= { rsuAscData 3 }

--5.22.4 RSU Signal Status Table
rsuSignalStatusTable  OBJECT-TYPE
      SYNTAX SEQUENCE OF RsuSignalStatusEntry
      MAX-ACCESS  not-accessible
      STATUS      current
      DESCRIPTION "<Definition> A table containing the signal phase and
            timing data for the current and upcoming movements for each
            signal group.
      <TableType> static
      <Object Identifier> 1.3.6.1.4.1.1206.4.2.18.21.4"
::= { rsuAscData 4 }

rsuSignalStatusEntry  OBJECT-TYPE
      SYNTAX RsuSignalStatusEntry
      MAX-ACCESS  not-accessible
      STATUS      current
      DESCRIPTION "<Definition> Parameters for a specific signal group.
      <Object Identifier> 1.3.6.1.4.1.1206.4.2.18.21.4.1"
      INDEX { rsuSignalGroupEntryNumber, rsuMovementIndex }
::= { rsuSignalStatusTable 1 }

RsuSignalStatusEntry ::= SEQUENCE {
      rsuSignalGroupEntryNumber     Integer32,
      rsuMovementIndex              Integer32,
      rsuSignalGroupIntersection    Integer32,
      rsuSignalGroupID              Integer32,
      rsuSignalState                Integer32,
      rsuSignalStateMinEndTick      Integer32,
      rsuSignalStateMaxEndTick      Integer32,
      rsuSignalStateLikelyEndTick   Integer32,
      rsuSignalStateTickConfidence  Integer32,
      rsuSignalStateNextTick        Integer32,
      rsuSignalStateStartTick       Integer32   }

--5.22.4.1 ASC SPaT Signal Group Entry Number
rsuSignalGroupEntryNumber  OBJECT-TYPE
      SYNTAX      Integer32 (1..255)
```

© 2023 AASHTO / ITE / NEMA 

```
      MAX-ACCESS  not-accessible
      STATUS      current
      DESCRIPTION "<Definition> The number for objects in this row. This
            value shall not exceed the maxRsuSignalGroups object value.
      <Object Identifier> 1.3.6.1.4.1.1206.4.2.18.21.4.1.1"
      REFERENCE "NTCIP 1202 signalGroupEntryNumber"
::= { rsuSignalStatusEntry 1 }

--5.22.4.2 ASC SPaT Movement Event Number
rsuMovementIndex  OBJECT-TYPE
      SYNTAX      Integer32 (1..16)
      MAX-ACCESS  not-accessible
      STATUS      current
      DESCRIPTION "<Definition> The movement index for objects in this row.
            This value shall not exceed the maxRsuMovementEvents object
            value. Index value 1 contains the value for the current interval
            and Index value 2 contains the value for the next interval.
      <Object Identifier> 1.3.6.1.4.1.1206.4.2.18.21.4.1.2"
      REFERENCE "NTCIP 1202 movementEventNumber"
::= { rsuSignalStatusEntry 2 }

--5.22.4.3 ASC SPaT Intersection Identifier
rsuSignalGroupIntersection  OBJECT-TYPE
      SYNTAX      Integer32 (0..65535)
      MAX-ACCESS  read-write
      STATUS      current
      DESCRIPTION "<Definition> The number is used to uniquely define an
            intersection within the region. A value of 0 indicates that the
            row is disabled and all other values in the row are not valid.
      <Object Identifier> 1.3.6.1.4.1.1206.4.2.18.21.4.1.3"
      REFERENCE "NTCIP 1202 signalGroupIntersection & SAE J2735
            DE_IntersectionID"
      DEFVAL { 0 }
::= { rsuSignalStatusEntry 3 }

--5.22.4.4 ASC SPaT Signal Group Identifier
rsuSignalGroupID  OBJECT-TYPE
      SYNTAX      Integer32 (0..255)
      MAX-ACCESS  read-write
      STATUS      current
      DESCRIPTION "<Definition> The number used to map between a movement
            phase state (and its timings) in the CU and movements defined in
            a MAP message for the intersection. A value of 255 is reserved to
            indicate a permanent green movement state.
      <Object Identifier> 1.3.6.1.4.1.1206.4.2.18.21.4.1.4"
      REFERENCE "NTCIP 1202 signalGroupID & SAE J2735 DE_SignalGroupID"
::= { rsuSignalStatusEntry 4 }

--5.22.4.5 ASC SPaT Event State
rsuSignalState  OBJECT-TYPE
      SYNTAX      INTEGER { other (1),
                  unavailable (2),
                  dark (3),
                  stopThenProceed (4),
                  stopAndRemain (5),
                  preMovement (6),
                  permissiveMovementAllowed (7),
```

 © 2023 AASHTO / ITE / NEMA

```
                  protectedMovementAllowed (8),
                  permissiveClearance (9),
                  protectedClearance (10),
                  cautionConflictingTraffic (11) }
      MAX-ACCESS  read-write
      STATUS      current
      DESCRIPTION "<Definition> This object value defines the movement phase
            state for a signal group. rsuMovementIndex.1 indicates the
            current movement phase state, and rsuMovementIndex.2 indicates
            the next movement phase state. If the movement phase state is
            unknown, a value of 2 is used.
      <Object Identifier> 1.3.6.1.4.1.1206.4.2.18.21.4.1.5"
      REFERENCE "NTCIP 1202 signalState2 & SAE J2735 DE_MovementPhaseState"
::= { rsuSignalStatusEntry 5 }

--5.22.4.6 ASC SPaT Signal State Minimum End Time
rsuSignalStateMinEndTick  OBJECT-TYPE
      SYNTAX      Integer32 (0..36111)
      MAX-ACCESS  read-write
      STATUS      current
      DESCRIPTION "<Definition> The tick count from the ASC representing the
            earliest future time point when the rsuSignalState is expected to
            change, excluding unexpected events such as a preempt request.
            This object is used with the rsuAscCurrentTick object. The value
            of this object will remain constant if the predicted future time
            point of the event does not change. Values from 0 to 35999 cover
            one hour. Values from 36000 to 36009 are used when a leap second
            occurs. Values from 36010 to 36110 are reserved to future use. A
            value of 36111 indicates the time point of the event is undefined
            or unknown.

            If rsuSignalStateMinEndTick is greater than rsuAscCurrentTick
            then the end time is in the current hour. If
            rsuSignalStateMinEndTick is less than rsuCurrentTick then the
            time is in the next hour.
      <Object Identifier> 1.3.6.1.4.1.1206.4.2.18.21.4.1.6"
      REFERENCE "NTCIP 1202 signalStateMinEndTick2 & SAE J2735 DE_TimeMark"
      DEFVAL { 36111 }
::= { rsuSignalStatusEntry 6 }

--5.22.4.7 ASC SPaT Signal State Maximum End Time
rsuSignalStateMaxEndTick  OBJECT-TYPE
      SYNTAX      Integer32 (0..36111)
      MAX-ACCESS  read-write
      STATUS      current
      DESCRIPTION "<Definition> The tick count from the ASC representing the
            latest future time point when the rsuSignalState is expected to
            change, excluding unexpected events such as a preempt request.
            This object is used with the rsuAscCurrentTick object. The value
            of this object will remain constant if the predicted future time
            point of the event does not change. Values from 0 to 35999 cover
            one hour. Values from 36000 to 36009 are used when a leap second
            occurs. Values from 36010 to 36110 are reserved to future use. A
            value of 36111 indicates the time point of the event is undefined
            or unknown.
```

© 2023 AASHTO / ITE / NEMA 

```
            If rsuSignalStateMaxEndTick is greater than rsuAscCurrentTick
            then the end time is in the current hour. If
            rsuSignalStateMaxEndTick is less than rsuAscCurrentTick then the
            time is in the next hour.
      <Object Identifier> 1.3.6.1.4.1.1206.4.2.18.21.4.1.7"
      REFERENCE "NTCIP 1202 signalStateMaxEndTick2 & SAE J2735 DE_TimeMark"
      DEFVAL { 36111 }
::= { rsuSignalStatusEntry 7 }

--5.22.4.8 ASC SPaT Signal State Likely Time
rsuSignalStateLikelyEndTick  OBJECT-TYPE
      SYNTAX      Integer32 (0..36111)
      MAX-ACCESS  read-write
      STATUS      current
      DESCRIPTION "<Definition> The tick count from the ASC representing the
            most likely future time point when the rsuSignalState is expected
            to change, excluding unexpected events such as a preempt request.
            This object is used with the rsuAscCurrentTick object. The value
            of this object will remain constant if the predicted future time
            point of the event does not change. Values from 0 to 35999 cover
            one hour. Values from 36000 to 36009 are used when a leap second
            occurs. Values from 36010 to 36110 are reserved to future use. A
            value of 36111 indicates the time point of the event is undefined
            or unknown.

            If rsuSignalStateLikelyEndTick is greater than rsuAscCurrentTick
            then the end time is in the current hour. If
            rsuSignalStateLikelyEndTick is less than rsuAscCurrentTick then
            the time is in the next hour.
      <Object Identifier> 1.3.6.1.4.1.1206.4.2.18.21.4.1.6"
      REFERENCE "NTCIP 1202 signalStateLikelyEndTick2 & SAE J2735
            DE_TimeMark"
      DEFVAL { 36111 }
::= { rsuSignalStatusEntry 8 }

--5.22.4.9 ASC SPaT Signal State Time Confidence
rsuSignalStateTickConfidence  OBJECT-TYPE
      SYNTAX      Integer32 (0..15)
      MAX-ACCESS  read-write
      STATUS      current
      DESCRIPTION "<Definition> The statistical confidence in the predicted
            value of the rsuSignalStateLikelyEndTick.
      <Object Identifier> 1.3.6.1.4.1.1206.4.2.18.21.4.1.9"
      REFERENCE "NTCIP 1202 signalStateTickConfidence2 & SAE J2735
            DE_TimeIntervalConfidence"
      DEFVAL { 0 }
::= { rsuSignalStatusEntry 9 }

--5.22.4.10 ASC SPaT Signal Next Tick
rsuSignalStateNextTick  OBJECT-TYPE
      SYNTAX      Integer32 (0..36111)
      MAX-ACCESS  read-write
      STATUS      current
      DESCRIPTION "<Definition> The tick count from the ASC representing the
            most likely future time point when the movement is expected to be
            allowed to move again (e.g., green), excluding unexpected events
            such as a preempt request. This object is used with the
```

 © 2023 AASHTO / ITE / NEMA

```
            rsuAscCurrentTick object. The value of this object will remain
            constant if the predicted future time point of the event does not
            change. Values from 0 to 35999 cover one hour. Values from 36000
            to 36009 are used when a leap second occurs. Values from 36010 to
            36110 are reserved to future use. A value of 36111 indicates the
            time point of the event is undefined or unknown.

            If rsuSignalStateNextTick is greater than rsuAscCurrentTick then
            the next time is in the current hour. If rsuSignalStateNextTick
            is less than rsuAscCurrentTick then the time is in the next hour.
      <Object Identifier> 1.3.6.1.4.1.1206.4.2.18.21.4.1.10"
      REFERENCE "NTCIP 1202 signalStateNextTick2 & SAE J2735 DE_TimeMark"
      DEFVAL { 36111 }
::= { rsuSignalStatusEntry 10 }

--5.22.4.11 ASC SPaT Signal Start Tick
rsuSignalStateStartTick  OBJECT-TYPE
      SYNTAX      Integer32 (0..36111)
      MAX-ACCESS  read-write
      STATUS      current
      DESCRIPTION "<Definition> The tick count from the ASC representing the
            start time of the next (future) movement state to follow the
            current movement state for a signal group. This object is used
            with the rsuAscCurrentTick object. The value of this object will
            remain constant if the predicted future time point of the event
            does not change. Values from 0 to 35999 cover one hour. Values
            from 36000 to 36009 are used when a leap second occurs. Values
            from 36010 to 36110 are reserved to future use. A value of 36111
            indicates the time point of the event is undefined or unknown.

            If rsuSignalStateStartTick is greater than rsuAscCurrentTick then
            the start time of the next movement state is in the current hour.
            If rsuSignalStateStartTick is less than rsuAscCurrentTick then
            the time is in the next hour.
      <Object Identifier> 1.3.6.1.4.1.1206.4.2.18.21.4.1.11"
      REFERENCE "NTCIP 1202 signalStateStartTick & SAE J2735 DE_TimeMark"
      DEFVAL { 36111 }
::= { rsuSignalStatusEntry 11 }

--5.22.5 Maximum SPaT Movement Maneuvers
maxRsuMovementManeuvers  OBJECT-TYPE
      SYNTAX      Integer32 (1..255)
      MAX-ACCESS  read-only
      STATUS      current
      DESCRIPTION "<Definition> This object indicates the maximum number of
            rows which shall appear in the rsuMovementManeuverTable object.
      <Object Identifier> 1.3.6.1.4.1.1206.4.2.18.21.5"
::= { rsuAscData 5 }

--5.22.6 ASC SPaT Movement Maneuvers Table
rsuMovementManeuverTable  OBJECT-TYPE
      SYNTAX      SEQUENCE OF RsuMovementManeuverEntry
      MAX-ACCESS  not-accessible
      STATUS      current
      DESCRIPTION "<Definition> A table containing maneuver assist data from
            the ASC for a specific movement at a signalized intersection.
      <Object Identifier> 1.3.6.1.4.1.1206.4.2.18.21.6"
```

© 2023 AASHTO / ITE / NEMA Copy Per RTM Distribution Permission

```
::= { rsuAscData 6 }

rsuMovementManeuverEntry OBJECT-TYPE
      SYNTAX      RsuMovementManeuverEntry
      MAX-ACCESS  not-accessible
      STATUS      current
      DESCRIPTION "<Definition> Maneuvers assist information for a specific
            movement at a signalized intersection.
      <Object Identifier> 1.3.6.1.4.1.1206.4.2.18.21.6.1"
      INDEX { rsuMovementManeuverIndex }
::= { rsuMovementManeuverTable 1 }

RsuMovementManeuverEntry ::= SEQUENCE {
      rsuMovementManeuverIndex            Integer32,
      rsuMovementManeuverIntersection     Integer32,
      rsuMovementManeuverSignalGroupID    Integer32,
      rsuMovementManeuverQueue            Integer32,
      rsuMovementManeuverStatus           BITS }

--5.22.6.1 ASC SPaT Movement Maneuver Identifer
rsuMovementManeuverIndex  OBJECT-TYPE
      SYNTAX      Integer32 (1..255)
      MAX-ACCESS  not-accessible
      STATUS      current
      DESCRIPTION "<Definition> The movement maneuver index for objects in
            this row. This value shall not exceed the maxRsuMovementManeuvers
            object value.
      <Object Identifier> 1.3.6.1.4.1.1206.4.2.18.21.6.1.1"
      REFERENCE "NTCIP 1202 movementManeuverId2 & SAE J2735
            DF_ConnectionManeuverAssist and DE_LaneConnectionID"
::= { rsuMovementManeuverEntry 1 }

--5.22.6.2 ASC SPaT Movement Intersection Identifier
rsuMovementManeuverIntersection  OBJECT-TYPE
      SYNTAX      Integer32 (0..65535)
      MAX-ACCESS  read-write
      STATUS      current
      DESCRIPTION "<Definition> This object is the intersection identifier
            for which the maneuver assist is for. A value of 0 indicates that
            the row is disabled and all other values in the row are not
            valid.
      <Object Identifier> 1.3.6.1.4.1.1206.4.2.18.21.6.1.2"
      REFERENCE "NTCIP 1202 signalGroupIntersection & SAE J2735
            DE_IntersectionID"
      DEFVAL { 0 }
::= { rsuMovementManeuverEntry 2 }

--5.22.6.3 ASC SPaT Movement Signal Group Identifier
rsuMovementManeuverSignalGroupID  OBJECT-TYPE
      SYNTAX      Integer32 (0..255)
      MAX-ACCESS  read-write
      STATUS      current
      DESCRIPTION "<Definition> This object is the signalGroupID for which
            the maneuver assist is for.
      <Object Identifier> 1.3.6.1.4.1.1206.4.2.18.21.6.1.3"
      REFERENCE "NTCIP 1202 signalGroupID & SAE J2735 DE_SignalGroupID"
::= { rsuMovementManeuverEntry 3 }
```

Copy Per RTM Distribution Permission © 2023 AASHTO / ITE / NEMA

```
--5.22.6.4 ASC SPaT Movement Queue
rsuMovementManeuverQueue  OBJECT-TYPE
      SYNTAX      Integer32 (0..10000)
      MAX-ACCESS  read-write
      STATUS      current
      DESCRIPTION "<Definition> This object SET by the ASC used to provide an
            estimated distance in meters from the stop bar to the back edge
            of the last vehicle in the queue for this movement, along the
            lane centerline.
      <Object Identifier> 1.3.6.1.4.1.1206.4.2.18.21.6.1.4"
      REFERENCE "NTCIP 1202 movementManeuverQueue2 & SAE J2735
            DF_ConnectionManeuverAssist and DE_ZoneLength"
::= { rsuMovementManeuverEntry 4 }

--5.22.6.5 ASC SPaT Movement Assist Status
rsuMovementManeuverStatus  OBJECT-TYPE
      SYNTAX      BITS { status(1)}
      MAX-ACCESS  read-write
      STATUS      current
      DESCRIPTION "<Definition> This object SET by the ASC indicating options
            for traveler connections through an intersection.
            Bit 7:      Reserved
            Bit 6:      Reserved
            Bit 5:      Reserved
            Bit 4:      Reserved
            Bit 3:      Reserved
            Bit 2:      Reserved
            Bit 1:      Status bit set to TRUE (1) if ANY pedestrians or
            bicyclists are detected in a conflicting movement. Set to FALSE
            (0) if there is a high certainty no pedestrians or bicyclists are
            present.
            Bit 0:      Reserved
            A SET of a 'reserved' bit to a value other than zero (0) shall
            return a badValue(3) error.
      <Object Identifier> 1.3.6.1.4.1.1206.4.2.18.21.6.1.5"
      REFERENCE "NTCIP 1202 movementManeuverStatus2 and
            DE_PedestrianBicycleDetect"
::= { rsuMovementManeuverEntry 5 }

--5.22.7 Maximum SPaT Speed Advisories
maxRsuAdvisorySpeeds  OBJECT-TYPE
      SYNTAX      Integer32 (1..255)
      MAX-ACCESS  read-only
      STATUS      current
      DESCRIPTION "<Definition> This object contains the maximum number of
            movement speed advisory entries this RSU supports.
      <OBJECT IDENTIFIER> 1.3.6.1.4.1.1206.4.2.18.21.7"
::= { rsuAscData 7 }

--5.22.8 ASC SPaT Advisory Speed Table
rsuAdvisorySpeedTable  OBJECT-TYPE
      SYNTAX      SEQUENCE OF RsuAdvisorySpeedEntry
      MAX-ACCESS  not-accessible
      STATUS      current
      DESCRIPTION "<Definition> A table containing data from the ASC on speed
            advisories at a signalized intersection.
```

© 2023 AASHTO / ITE / NEMA Copy Per RTM Distribution Permission

```
      <Object Identifier> 1.3.6.1.4.1.1206.4.2.18.21.8"
::= { rsuAscData 8 }

rsuAdvisorySpeedEntry  OBJECT-TYPE
      SYNTAX      RsuAdvisorySpeedEntry
      MAX-ACCESS  not-accessible
      STATUS      current
      DESCRIPTION "<Definition> Speed advisory information for a signal group
            at a signalized intersection.
      <Object Identifier> 1.3.6.1.4.1.1206.4.2.18.21.8.1"
      INDEX { rsuAdvisorySpeedIndex }
::= { rsuAdvisorySpeedTable 1 }

RsuAdvisorySpeedEntry::= SEQUENCE {
      rsuAdvisorySpeedIndex         Integer32,
      rsuAdvisorySpeedIntersection  Integer32,
      rsuAdvisorySpeedSignalGroupID Integer32,
      rsuAdvisorySpeedType          Integer32,
      rsuAdvisorySpeedAdvice        Integer32,
      rsuAdvisorySpeedZoneLength    Integer32,
      rsuAdvisorySpeedClass         Integer32  }

--5.22.8.1  ASC SPaT Advisory Speed Index
rsuAdvisorySpeedIndex  OBJECT-TYPE
      SYNTAX      INTEGER (1..255)
      MAX-ACCESS  read-write
      STATUS      current
      DESCRIPTION "<Definition> The advisory speed index for objects in this
            row. This value shall not exceed the maxRsuAdvisorySpeeds object
            value.
      <Object Identifier> 1.3.6.1.4.1.1206.4.2.18.21.8.1.1
      <Unit> number"
::= { rsuAdvisorySpeedEntry 1 }

--5.22.8.2 ASC SPaT Advisory Speed Intersection Identifier
rsuAdvisorySpeedIntersection  OBJECT-TYPE
      SYNTAX      Integer32 (0..65535)
      MAX-ACCESS  read-write
      STATUS      current
      DESCRIPTION "<Definition> This object is the intersection identifier
            for which the advisory is for. A value of 0 indicates that the
            row is disabled and all other values in the row are not valid.
      <Object Identifier> 1.3.6.1.4.1.1206.4.2.18.21.8.1.2"
      REFERENCE "NTCIP 1202 signalGroupIntersection & SAE J2735
            DE_IntersectionID"
      DEFVAL { 0 }
::= { rsuAdvisorySpeedEntry 2 }

--5.22.8.3 ASC SPaT Advisory Speed Signal Group Identifier
rsuAdvisorySpeedSignalGroupID  OBJECT-TYPE
      SYNTAX      Integer32 (0..255)
      MAX-ACCESS  not-accessible
      STATUS      current
      DESCRIPTION "<Definition> This object is the signalGroupID for which
            the advisory is for.
      <Object Identifier> 1.3.6.1.4.1.1206.4.2.18.21.8.1.3"
      REFERENCE "SAE J2735 DE_SignalGroupID"
```

 © 2023 AASHTO / ITE / NEMA

```
::= { rsuAdvisorySpeedEntry 3 }

--5.22.8.4  ASC SPaT Advisory Speed Type
rsuAdvisorySpeedType  OBJECT-TYPE
      SYNTAX      INTEGER { none(1),
                            greenwave(2),
                            ecoDrive(3),
                            transit(4)}
      MAX-ACCESS  read-write
      STATUS      current
      DESCRIPTION "<Definition> The type of speed advisory provided by the
            ASC for this movement, such as greenwave or ecoDrive. Note: The
            enumerations do not match DE_AdvisorySpeedType.
      <Object Identifier> 1.3.6.1.4.1.1206.4.2.18.21.8.1.4"
      REFERENCE "NTCIP 1202 advisorySpeedType2 & SAE J2735
            DE_AdvisorySpeedType"
::= { rsuAdvisorySpeedEntry 4 }

--5.22.8.5  ASC SPaT Advisory Speed Advice
rsuAdvisorySpeedAdvice  OBJECT-TYPE
      SYNTAX      Integer32 (0..500)
      MAX-ACCESS  read-write
      STATUS      current
      DESCRIPTION "<Definition> The advisory speed provided by the ASC for
            this movement, in units of 0.1 meters per second. A value of 500
            indicates that speed is unavailable.
      <Object Identifier> 1.3.6.1.4.1.1206.4.2.18.21.8.1.5
      <Unit> one-tenth of a meter per second"
      REFERENCE "NTCIP 1202 advisorySpeedAdviceSpeed2 & SAE J2735
            DE_SpeedAdvice"
      DEFVAL { 500 }
::= { rsuAdvisorySpeedEntry 5 }

--5.22.8.6 ASC SPaT Advisory Speed Zone
rsuAdvisorySpeedZoneLength  OBJECT-TYPE
      SYNTAX      Integer32 (0..10000)
      MAX-ACCESS  read-write
      STATUS      current
      DESCRIPTION "<Definition> The distance, in meters, indicates the region
            upstream from the stopbar SET by the ASC for which the advisory
            speed is recommended.
      <Object Identifier> 1.3.6.1.4.1.1206.4.2.18.21.8.1.6
      <Unit> meter"
      REFERENCE "NTCIP 1202 advisorySpeedAdviceSpeedZoneLength & SAE J2735
            DE_ZoneLength"
::= { rsuAdvisorySpeedEntry 6 }

--5.22.8.7 ASC SPaT Advisory Speed Restriction Class
rsuAdvisorySpeedClass  OBJECT-TYPE
      SYNTAX      Integer32 (0..255)
      MAX-ACCESS  read-write
      STATUS      current
      DESCRIPTION "<Definition> The vehicle type(s) to which the advisory
            speed applies to. The value is provided in the MAP message for
            the intersection. A value of 0 indicates that advisory speed
            applies to all vehicle types.
      <Object Identifier> 1.3.6.1.4.1.1206.4.2.18.21.8.1.7"
```

© 2023 AASHTO / ITE / NEMA 

```
      REFERENCE "NTCIP 1202 advisorySpeedClass2 & SAE J2735
            DE_RestrictionClassID"
      DEFVAL { 0 }
::= { rsuAdvisorySpeedEntry 7 }

--5.22.9 ASC Intersection Status
rsuSpatStatus  OBJECT-TYPE
      SYNTAX      BITS{
                  manual(0),
                  stopTime(1),
                  failureFlash(2),
                  preempt(3),
                  priority(4),
                  fixedTime(5),
                  trafficDependent(6),
                  standby(7),
                  failureMode(8),
                  invalidMAP(12),
                  invalidSPaT(13) }
      MAX-ACCESS  read-write
      STATUS      current
      DESCRIPTION "<Definition> If a bit is enabled or active, the associated
            bit shall be set to (1). The definition of the term 'recent' is
            defined by the system in use. Bit 0 is equal to Bit 0 of the BIT
            STRING of DE_IntersectionStatusObject, Bit 1 is equal to Bit 1,
            etc.
      Bit 0: Enabled when unitControlStatus is remoteManualControl (9) or
            localManualControl (10)
      Bit 1: Enabled when Bit 4: Stop Time in unitAlarmStatus2 is TRUE
      Bit 2: Enabled when unitFlashStatus is localManual (4), faultMonitor
            (5), or mmu (6). This bit may also be enabled if the preemptState
            is other(1) and indeterminate.
      Bit 3: Enabled when the preemptState for any preempt is any value other
            than notActive (2) or notActiveWithCall (3). This bit may also be
            enabled if the preemptState is other(1) and determinate.
      Bit 4: Enabled when the priorityStrategyRequestStatusInCO for any
            priority request is a value of requestQueued (2), or
            activeProcessing (4).
      Bit 5: Enabled if the CU is operating in fixedTime mode. This bit and
            bit 6 cannot both be simultaneously active (1).
      Bit 6: Enabled if the CU is operating in an actuated mode. This bit and
            bit 5 cannot both be simultaneously active (1).
      Bit 7: Enabled if the unitFlashStatus is automatic (3), startup (7), or
            preempt (8).
      Bit 8: Controller failure or failure in operation.
      Bit 9: Reserved. SET to 0.
      Bit 10: Reserved. SET to 1.
      Bit 11: Reserved. SET to 1.
      Bit 12: Enabled if the MAP message is invalid.
      Bit 13: Enabled if the SPaT message is invalid.
      Bits 14-15: Reserved

            The default bit value for Bits 10 and 11 is enabled (1). The
            default bit value for all other Bits is disabled (0).
      <Object Identifier> 1.3.6.1.4.1.1206.4.18.21.9"
      REFERENCE "NTCIP 1202 spatStatus2 & SAE J2735
            DE_IntersectionStatusObject"
```

 © 2023 AASHTO / ITE / NEMA

```
::= { rsuAscData 9 }

--5.22.10   Road Authority Identifier
rsuSpatRoadAuthorityID  OBJECT-TYPE
      SYNTAX      OBJECT IDENTIFIER
      MAX-ACCESS  read-write
      STATUS      current
      DESCRIPTION "<Definition> This object is the unique identifier of the
            agency for the SPaT and MAP message. This object shall be either
            a valid OBJECT IDENTIFIER or a null string.
      <Object Identifier> 1.3.6.1.4.1.1206.4.18.21.10"
      REFERENCE "SAE J2735 DE_RelativeRoadAuthorityID"
::= { rsuAscData 10 }

--5.22.11   ASC Enabled Lanes
rsuSpatEnabledLanesStatus  OBJECT-TYPE
      SYNTAX      OCTET STRING
      MAX-ACCESS  read-write
      STATUS      current
      DESCRIPTION "<Definition> Each octet within the octet string contains
            the (revocable) lane identifier that is currently enabled. Lanes
            that may not always be ACTIVE (enabled) should be identified as a
            revocable lane in the MAP message for the intersection.
      <Object Identifier> 1.3.6.1.4.1.1206.4.18.21.11"
      REFERENCE "SAE J2735 DF_EnabledLaneList"
::= { rsuAscData 11 }

--5.22.12   ASC Signal Status Block
rsuSignalStatusBlock OBJECT-TYPE
      SYNTAX      OerString
      MAX-ACCESS  read-write
      STATUS      current
      DESCRIPTION "<Definition> An OER encoded string of the mandatory data
         required from an ASC to support a SPaT message as defined below.
         This object is used for uploading SPaT data from the ASC in a
         bandwidth efficient manner.

         rsuSignalStatus ::= SEQUENCE {
            rsuAscCurrentTick.0,          -- Bytes 1 & 2
            rsuSpatStatus.0               -- 2 BYTES
            rsuSpatEnabledLanesCount.0    -- 1 BYTE
            rsuSpatEnabledLanesStatus.0   -- n BYTES
            rsuSignalGroupEntryCount.0    -- 1 BYTE
            rsuSignalData2    SEQUENCE OF RsuSignalStatusData2    OPTIONAL
         }

         RsuSignalStatusData2 ::== SEQUENCE {
            rsuSignalGroupEntryNumber.y         -- 1 BYTE
            rsuSignalState2.y.x                 -- 1 BYTE
            rsuSignalStateMinEndTick2.y.x       -- 2 BYTES
            rsuSignalStateMaxEndTick2.y.x       -- 2 BYTES
            rsuSignalStateNextTick2.y.x         -- 2 BYTES
            rsuSignalStateStartTick.y.x         -- 2 BYTES
            }

         where:
```

© 2023 AASHTO / ITE / NEMA 

```
        n = rsuSpatEnabledLanesCount. This is the number of octets in the
        OCTET STRING of rsuSpatEnabledLanesStatus
        rsuSignalGroupEntryCount is a count of the number of
        rsuSignalGroupEntryNumber included in this object
        y is the rsuSignalGroupEntryNumber in the rsuSignalStatusTable
        x is the movementEventNumber for the rsuSignalStatusTable. Only a
        value of 1 (current interval) and 2 (next interval) are used.

        It is necessary that the rsuSignalGroupIntersection and
        rsuSignalGroupID objects in the rsuSignalStatusTable be populated
        before the rsuSignalStatusBlock be used.

        Although this object theoretically allows up to 255
        rsuSignalGroupEntryNumbers, check that the number does not exceed
        the Maximum Transmission Unit (MTU) of the lower layers used.
      <Object Identifier> 1.3.6.1.4.1.1206.4.18.21.12"
::= { rsuAscData 12 }
```


© 2023 AASHTO / ITE / NEMA

# Annex F
# Generic Concepts and Definitions [Informative]

## F.1 Meaning of 'Other' as a Value

To obtain the goals of interoperability and interchangeability among devices complying with NTCIP standards, the standard has been written to allow the introduction and use of values and methods other than those defined in the standard, but with the caveat that the setting of values within standardized functions and objects does not allow it to set a value to 'other,' while the retrieval of values within standardized functions and objects includes a value of 'other.' This approach allows non-standardized approaches to address special operations, while maintaining the integrity of the standard.

Should the use of a value of 'other' be allowed to be set for very specific standardized functions and objects, the intended operations follow:

a) SET value of standardized object to a value of 'other,' indicating that none of the standardized values are to be used.
b) Use the vendor's detailed documentation to determine the vendor-specific function or object that is associated with the standardized function or object whose value has been set to 'other.'
c) SET of vendor-specific function or object to the desired value.
d) When performing a GET on the standardized function or object, the ASC returns a value of 'other' and it is assumed that the vendor-specific function or object is known and can be queried to return the configured value to address the desired function or object.

## F.2 Manufacturer-Specific Consistency Checks

There are functional differences between CUs manufactured by different vendors. It is assumed that manufacturers will use consistency checks, beyond those specified here, to prevent accidental corruption of the CU database. Any such consistency checks have to utilize the error reporting mechanism defined by this standard. These consistency checks and associated error messages should be clearly described and documented.

This annex provides:

a) Examples of how a management station may interface with an ASC complying with this standard as envisioned by the authors. Any ASC claiming conformance with the subject features depicted in these figures shall support the exchanges as shown. However, the flexible design of the NTCIP protocols allows a large number of other possibilities and these figures do not limit any other requirements of these standards. These diagrams are merely provided to promote a common understanding of how systems may be designed in order to increase the likelihood of interoperability in deployed systems.
b) Supplemental information on overlap sequences based on programming data for 'overlapIncludedPhases' and 'overlapModifierPhases.'

## F.3 Connected Intersections

A Connected Intersection (CI) is defined as an infrastructure system that broadcasts Signal, Phase, and Timing (SPaT); mapping information; and positional correction data to vehicles directly via a Roadside Unit (RSU). At a CI, an RSU broadcasts intersection and approach geometry (MAP) and SPaT messages to connected devices near the intersection. The source of the MAP data is from an agency or map provider, who loads the MAP data to the RSU for broadcasting. The source of the SPaT data is the traffic controller, who provides the data to the RSU for broadcasting. Connected devices, such as a connected vehicle or a connected pedestrian, use the MAP and SPaT data to traverse through the intersection. For

© 2023 AASHTO / ITE / NEMA Copy Per RTM Distribution Permission

additional information about a connected intersection, refer to CTI 4501, Connected Intersections (CI) Implementation Guide.

From the context of NTCIP 1202, the RSU is viewed as a functional entity called the CV Roadside Process in the context of NTCIP 1202 v03. The CV Roadside Process may reside in a separate physical device (specifically, the RSU) or as a functional process within the ASC Controller Unit. The CV Roadside Process is responsible for managing and processing connected vehicle applications, and receiving and broadcasting connected vehicle (e.g., SAE J2735) messages. The ASC Process is a functional entity that resides within the ASC Controller Unit and is responsible for managing signal operations for a signalized intersection.

Part of the following guidance was developed by a Traffic Controller Vendors Subcommittee from the Connected Intersections project, sponsored by USDOT JPO. This subcommittee was part of the Traffic Controller Issues Task Force (TCI TF) of the Connected Intersections (CI) Steering Committee. The Subcommittee was tasked with establishing a consistent set of assumptions and criteria that should be adhered to when generating SPaT data from within NTCIP 1202-based traffic controller firmware for all operational modes of traffic control. This commonality aims to reduce the vendor-specific ambiguity of controller-generated SPaT data; it also seeks to improve the determinism and quality of SPaT data when sourced by NTCIP 1202 v03–based traffic controllers. The full guidance by the subcommittee can be found in Annex A of CTI 4501. It was a goal of this guide to provide SPaT data in a nationally interoperable manner for a connected intersection during all possible times and conditions of signalized operation, including non-standard scenarios. This includes, but is not limited to, startup, flashing, manual control, and preemptive operation.

### F.3.1 Base Assumptions

This section provides the base assumptions and input parameters that all NTCIP 1202 v03 traffic controllers should apply when generating SPaT data.

#### F.3.1.1 Active TOD Control

SPaT data shall be generated by the traffic control firmware under assumption that the currently active time of day plans (Event Plan), input driven commands, or active pages will remain currently active. This is to include coordination patterns, timing plans, sequence tables, and other “pages” that are run on a time-of-day basis and/or triggered from a variety of potential sources. A traffic controller's SPaT data can be enhanced to “look ahead” into pending plans, patterns, sequences, and pages that are soon to become active, but this is not a requirement of the control firmware.

#### F.3.1.2 Active Preemption Control

SPaT data shall be generated under assumption that any inactive preemption, NTCIP 1211, or Signal Request Message (SRM) requests will remain inactive and any active priority requests will remain active until served. The controller firmware shall update SPaT values within one second upon receiving changes to priority control inputs. One second was selected to allow the controller sufficient time to determine various analog inputs (e.g., high / low for a preemption input). The controller still must update the SPaT values as required in Sections 3.6.3.1 and 3.6.3.6.

#### F.3.1.3 Active Demand

SPaT data shall be generated under assumption of any active demand for phase or pedestrian service. This demand can be sourced from cabinet inputs, central system commands, controller configuration, internal logic, or various other means. The controller shall generate SPaT data upon current demand (Phase/Ped calls) and be updated within one-tenth of a second upon changes to this demand (see Sections 3.6.3.1 and 3.6.3.6). Note that the demand need not be actively serviceable to be considered in the SPaT message. As an example, a coordinator may omit a phase until its permissive window opens;

Copy Per RTM Distribution Permission © 2023 AASHTO / ITE / NEMA

however, the SPaT data generated shall consider this phase to have serviceable demand with expectation of future opening of this permissive window.

#### F.3.1.4 NTCIP 1202 v03 Configuration

SPaT data shall be generated with consideration of the NTCIP configuration of the traffic controller for those objects listed below. These objects form the minimal basis of consideration for SPaT generation. Vendors are encouraged to improve the accuracy of SPaT by incorporation of additional features or algorithmic logic; however, this minimal set of features, if supported by the traffic controller, shall be factored into SPaT generation. There is not a documented basis for “factoring” in these features. It is expected that each traffic controller vendor maintains active timers for these features and can compute the expected phase sequence and timing intervals using these internal mechanisms. SPaT data shall be updated within one-tenth of a second after any consistency checks and transactional database changes are applied to the traffic controller.

Example: If the traffic controller supports options to include MUTCD 3 second all red pedestrian clearance, pedestrian change through yellow, and pedestrian change through red, then the TimeMark generated for the end of green estimation must be adjusted based upon the pedestrian timing to include these three features if enabled as follows:

TimeMark >= Current Time
+ Pedestrian Walk Time Remaining
+ Pedestrian Change Time Remaining
+ MUTCD 3 Second Pedestrian Clearance (if enabled)
– Pedestrian Change Through Yellow (if enabled)
– Pedestrian Change Through Red (if enabled)

Some of these objects and how they affect SPaT should be fully self-explanatory (e.g., dual entry is highlighted below so that type of call should be treated as demand when applicable). Others may require more detailed guidance for how the object is to be applied.

```
PhaseEntry ::= SEQUENCE {
        phaseNumber             INTEGER,
        phaseWalk               INTEGER,
        phasePedestrianClear    INTEGER,
        phaseMinimumGreen       INTEGER,
        phasePassage            INTEGER,
        phaseMaximum1           INTEGER,
        phaseMaximum2           INTEGER,
        phaseYellowChange       INTEGER,
        phaseRedClear           INTEGER,
        phaseRedRevert          INTEGER,
        phaseAddedInitial       INTEGER,
        phaseMaximumInitial     INTEGER,
        phaseDynamicMaxLimit    INTEGER,
        phaseDynamicMaxStep     INTEGER,
        phaseOptions            INTEGER,
        phaseRing               INTEGER,
        phaseConcurrency        OCTET STRING,
        phaseMaximum3           INTEGER,
        phaseYellowandRedChangeTimeBeforeEndPedClear    INTEGER,
        phasePedWalkService     INTEGER,
        phaseDontWalkRevert     INTEGER,
        phasePedAlternateClearance      INTEGER,
        phasePedAlternateWalk           INTEGER,
        phasePedAdvanceWalkTime         INTEGER,
        phasePedDelayTime               INTEGER,
```

© 2023 AASHTO / ITE / NEMA Copy Per RTM Distribution Permission

phaseAdvWarnGrnStartTime INTEGER,
phaseAdvWarnRedStartTime INTEGER,
phaseAltMinTimeTransition INTEGER }

PhaseStatusGroupEntry ::= SEQUENCE { }
PhaseControlGroupEntry ::= SEQUENCE { }

unitStartUpFlash
unitAutoPedestrianClear
unitRedRevert
unitFlashStatus SYNTAX INTEGER { notFlash(2),
automatic(3),
localManual(4),
faultMonitor(5),
mmu(6),
startup(7),
preempt (8)}
unitAlarmStatus2
Bit 5: Offset Transitioning – Whenever the CU is performing an offset transition (correction in process)
Bit 4: Stop Time – When either CU Stop Time Input becomes active.
Bit 3: External Start – When the CU External Start becomes active.
unitAlarmStatus1
Bit 7: CoordActive – When coordination is active and not preempted or overridden.
Bit 6: Local Free – When any of the CU inputs and/or programming cause it not to run coordination.
Bit 5: Local Flash – When the Controller Unit Local Flash input becomes active, MMU Flash input is not active, and Flash is not commanded by the system.
Bit 4: MMU Flash – When the Controller Unit MMU Flash input remains active for a period of time exceeding the Start-Up Flash time.
shortAlarmStatus
Bit 1: T&F Flash – When either the Local Flash or MMU Flash input becomes active.
Bit 0: Preempt – When any of the CU Preempt inputs become active.
unitControl
Bit 5: Walk Rest Modifier
Bit 4: Call to Non-Actuated 2
Bit 3: Call to Non-Actuated 1
Bit 2: External Minimum Recall

MCE/Manual Advance

PreemptEntry ::= SEQUENCE { }
RingControlGroupEntry ::= SEQUENCE { }
channelGreenType SYNTAX INTEGER { other (1),
protected (2),
permissive (3),
flashYellow (4),
flashRed (5) }
OverlapEntry ::= SEQUENCE { }

#### F.3.1.5 Proprietary Features

Vendors are encouraged, but not required, to implement SPaT for proprietary controller features. Those features that impact the features listed above shall be assumed to be incorporated into SPaT when these dependent features are affected (e.g., Minimum Green affected by proprietary queue measurement techniques).

Copy Per RTM Distribution Permission © 2023 AASHTO / ITE / NEMA

#### F.3.1.6 Externally Coordinated and/or Adaptively Controlled Intersections

In certain cases, the resultant signal state durations are not being decided by the traffic controller but rather an external process that is asserting a higher-level control over the traffic controller. The traffic controller may be commanded to run free, hold-on-line, or run specific coordination patterns by the external control process that are then manipulated in real time by hold/force-off/omit or other remote commands. CTI 4501 describes this process as an External Control Local Application (ECLA). SPaT messages generated by the traffic controller in these cases will not be accurate to the future state control commands that are offered by the external process.

As an example, an intersection running under an external command to free or hold-on-line may not have awareness of serviceable side street demand or pending force off commands that are being managed by the external process. In these cases, the external process should carry the responsibility to distribute the SPaT messages since it alone knows the likely future state of the intersection. It, however, may not have awareness of cabinet I/O, preemptive control, or other higher priority actions within the traffic controller.

The ASC WG discussed if the ASC or the ECLA should be responsible for generating the SPaT data needed for a J2735 SPaT message. Contrary to CTI 4501, the ASC WG believes that the controller needs to provide the SPaT data because the controller ultimately controls the signal phases and timing for the signalized intersection (except for cabinet flash). The ASC WG agreed that exchanging data between the controller and the ECLA is needed to properly support the generation of SPaT data, such as the ECLA providing the minimum and maximum end times. However, due to time and schedule considerations, the requirements and design to support these data exchanges are deferred to a future version of NTCIP 1202.

#### F.3.1.7 Post-Processed SPaT Generation

There are expected cases where the SPaT message is not generated by the traffic controller, but rather a separate device that is observing the operation of the traffic controller. This could include MMUs/CMUs that are observing the actual field outputs, or a process that is performing NTCIP polling of the traffic controller status and issuing SPaT messages on behalf of the traffic controller. These methods will be limited in their knowledge of the inner workings of the traffic controller; however, they offer some means to retrofit SPaT functionality to intersections running legacy control equipment that cannot support SPaT message generation.

In these cases, the device that is generating the SPaT message is not likely to be able to handle more detailed cases, such as timed overlaps, preemptions, and/or flash events. Given the critical safety nature of SPaT messages, it is recommended that this approach be taken only when the signals are running simple sequences and conditions that the post-processed SPaT generator can accurately represent.

### F.3.2 Conformance

For an ASC to claim conformance to NTCIP 1202 v03 for a connected vehicle environment, the ASC shall provide the connected vehicle interface for a management station including all mandatory requirements identified in the PRL Table (Table 5) for the interface between the management station and the ASC Process. As noted in Section 3.3.2.1, a conformant device may offer additional (optional) features, as long as they are conformant with the requirements of NTCIP 1202 v03 and the standards it references (e.g., NTCIP 1201 v03).

Support of the interface between the ASC Process and CV Roadside Process is also required to claim conformance with NTCIP 1202 v03. The ASC shall provide for that interface by fulfilling all mandatory requirements identified in the PRL Table (Table 5). It is recognized that there are various methods and communications protocols that can be used to exchange information across either interface and are highly dependent on the relationship between the ASC Process and the CV Roadside Process.

© 2023 AASHTO / ITE / NEMA Copy Per RTM Distribution Permission

For example, one possibility is that the ASC Process and the CV Roadside Process are integral to and performed by the ASC, with an external V2X Radio for communicating with connected devices. In this situation, the ASC Process – CV Roadside Process interface does not exist from the perspective of NTCIP 1202 v03 because the functions of the ASC Process and the CV Roadside Process are considered to be internal to the ASC controller unit.

### F.3.3 Notes and Guidance

This section contains notes and guidance for object definitions in NTCIP 1202 that provide SPaT data from the ASC Process to the CV Roadside Process.

#### F.3.3.1 Disciplined Time

For the purposes of this discussion, the time from a reliable source will be called **disciplined time**—that is, it "does not accumulate any offset over time." When broadcasting SPaT messages, the CV Roadside Process has to provide signal timing data using disciplined time.

However, many existing traffic signal controllers use AC line frequency, which is not disciplined time, to determine their internal time. AC line frequency has the benefit that all signal controllers that use the same line frequency, such as along an arterial, remain synchronized for signal timing coordination, but is an issue when providing SPaT data.

To address this issue, the ASC provides ascCurrentTick2 that defines the current time point for the ASC. This time point is provided in units of tenths of a second, with a value of 0 representing the top of the hour, resulting in a range of 0 to 35999. The value of 36009 is used to support leap seconds. 36111 is used when the time is undefined or unknown. These time points do not need to be synchronized with UTC time or the RSU time.

#### F.3.3.2 SPaT and MAP Relationship

The ASC is the source of the SPaT data that may be broadcast to travelers, in the form of an SAE J2735 SPaT message, for a signalized intersection. However, this SPaT data has little value to travelers unless the SPaT data can be correlated with a desired traveler movement through a signalized intersection. In SAE J2735, this desired movement is characterized by the identity of the lanes the traveler wishes to enter and exit the signalized intersection. The identity and location of the lane is provided in a MAP data message that is broadcast to travelers. Without this MAP data message, a traveler may receive the SPaT data broadcast, but cannot unambiguously determine what data applies to his desired movement through the signalized intersection.

In SAE J2735, the relationship between the SPaT and MAP messages is established by a data element, DE_SignalGroupID. In the SPaT message, DE_SignalGroupID is identified with a movement phase state (e.g., green, yellow, red) and timing data (TimeChangeDetails) for that movement. In the MAP data message, every allowed movement (e.g., identifier of the desired lanes to enter and exit the intersection) is associated with DE_SignalGroupID. Every DE_SignalGroupID in the SPaT data provided by the traffic controller in NTCIP 1202 v03B must also have the DE_SignalGroupID identified in the corresponding MAP message.

#### F.3.3.3 SPaT Data Overview

Figure 12 shows the relationship between the tables and objects defined by NTCIP 1202 v03B to support providing SPaT data to the CV Roadside Process to generate a SPaT message. Each box represents a table in NTCIP 1202 v03.

Copy Per RTM Distribution Permission © 2023 AASHTO / ITE / NEMA

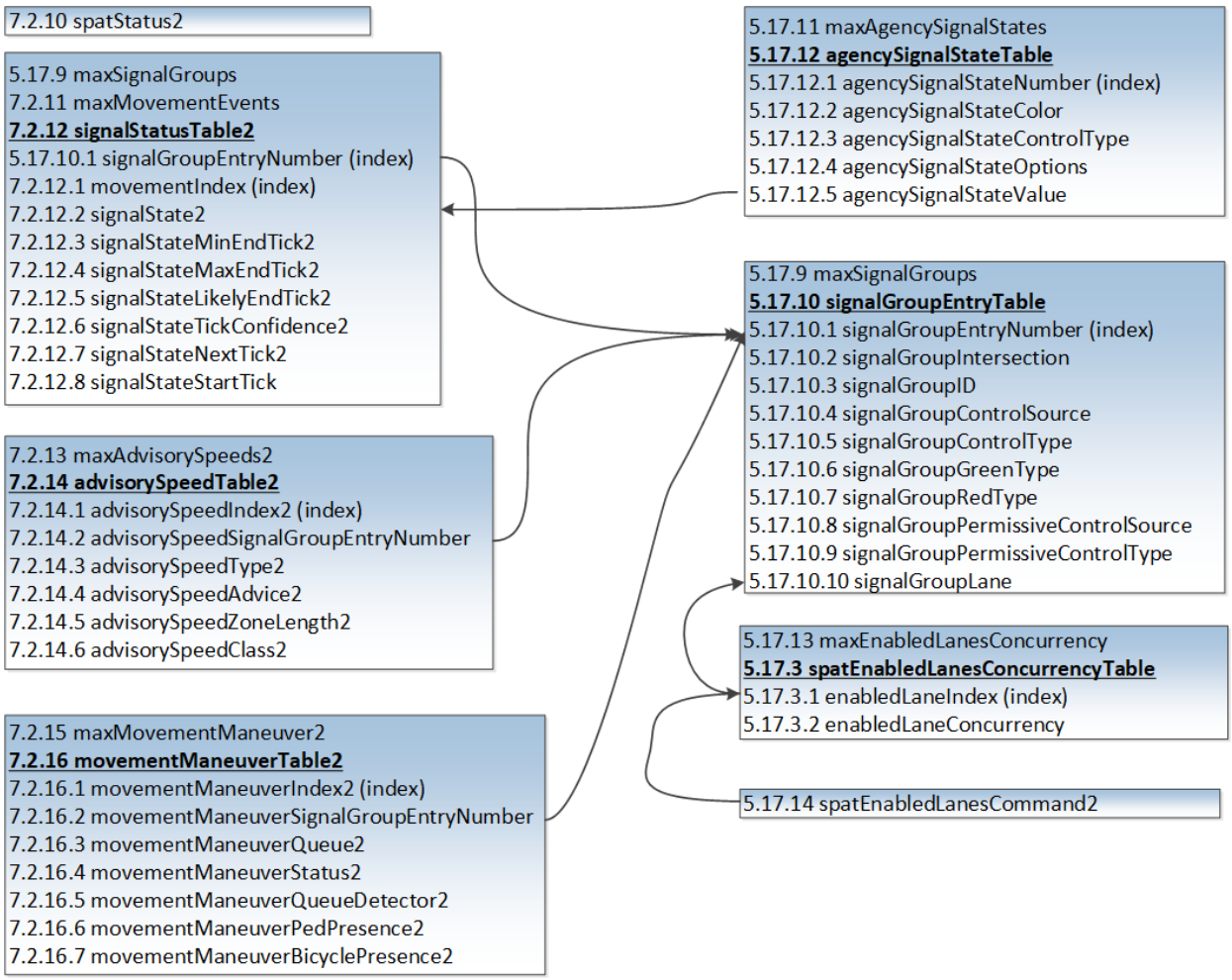


**Figure 12 NTCIP 1202 v03B Tables to Provide SPaT Data**

The remainder of this section provides an overview of the tables and objects defined in this standard to support the exchange of SPaT data so a CV Roadside Process can generate and broadcast SPaT messages and so a management station such as a server at a TMC can monitor the SPaT data being generated by the ASC.

Note that the SPaT data can be exchanged with more than one CV Roadside Process (or RSU). This scenario may be necessary for ASCs that control signal timing for more than one intersection that may be spaced far apart. Assuming V2X communications, such as Dedicated Short-Range Communications (DSRC) or C-V2X, has a broadcast/receive range of approximately 300 meters, when considering the speeds of vehicles approaching a signalized intersection, a broadcast range of 300 meters may be insufficient if the intersections controlled by an ASC are far apart, thus requiring the use of more than one RSU to broadcast SPaT messages. Examples of intersections that also may require more than one RSU are complex traffic circles (e.g., Dupont Circle in Washington, D.C.) or Texas diamond interchanges.

The SPaT data provided from an ASC to the CV Roadside Process using NTCIP 1202 v03B is categorized into six parts. The first four parts are mandatory to be provided to the CV Roadside Process.

1. **Intersection Status**. Represented by spatStatus2, provides the status of the traffic signal controller. See Annex F.3.3.4 for additional guidance.

© 2023 AASHTO / ITE / NEMA Copy Per RTM Distribution Permission

2. **Movement Phase State**. Represented by signalState2 in signalStatusTable2, provides the current and next state of each allowed movement at the intersection. See Annex F.3.3.5 for additional guidance.
3. **TimeChangeDetails**. Represented by signalStateMinEndTick2, signalStateMaxEndTick2, signalStateNextTick2, and signalStateStartTick objects in signalStatusTable2, provides the predicted start and end of each allowed movement at the intersection. The signalStatusTable2 also includes the signalStateLikelyEndTick2 and signalStateTickConfidence2 objects, but these objects are not mandatory for a SPaT message, as defined in CTI 4501. See Annex F.3.3.6 for additional guidance.
4. **Enabled Lanes**. Represented by spatEnabledLanesStatus, indicates what revocable lanes are "asserted." See Annex F.3.3.7 for additional guidance.
5. **Advisory Speeds**. Represented in advisorySpeedTable2, provides advisory speed for a signalGroupID. See Annex F.3.3.8 for additional guidance.
6. **Movement Maneuver Assist**. Represented in movementManeuverTable2, provides assist information for a movement at a signalized intersection. See Annex F.3.3.9 for additional guidance.

The signalGroupEntryTable and agencySignalStateTable determine the Movement Phase State for a signalGroupID based on the current signal indications. The spatEnabledLanesConcurrencyTable defines the allowable sets of enabled lanes (lanes that can be concurrently enabled) for the intersection.

The signalStatusBlock2 is an oerstring that contains the four mandatory parts required to be provided to the CV Roadside Process to support the generation of a SPaT message. The oerstring is a "compressed" version that consists of the Intersection Status, Movement Phase States, Enabled Lanes, and the mandatory parts of TimeChangeDetails.

It is the intention that the ASC will exchange the details of the signalStatusBlock2 with the CV Roadside Process 10 times per second. The signalStatusBlock2 object is the design from the viewpoint of the ASC—all the "objects" that make up the signalStatusBlock2 object are read-only objects. The equivalent object in the CV Roadside Process is called rsuSignalStatusBlock, which is a read-write object. Note that the equivalent CV Roadside Process objects should be defined in NTCIP 1218, but at the time of publication, the RSU Working Group had not re-convened, so these objects are proposed and are defined in Annex E.2. The specific requirement for this exchange is 3.5.4.3.1.1.9, Provide SPaT Information to a CV Roadside Process, and the design to fulfill this requirement is for the ASC to SET rsuSignalStatusBlock on the CV Roadside Process. The signalStatusBlock2 can be used by the ASC to provide the SPaT information to a management station, such as a traffic management center.

#### F.3.3.3.1 Example

The following provides an octet string value for a signalStatusBlock2 object. This example is based on the intersection diagram in Figure 13. The example assumes no right-turn-on-red, so signal group 14 is NOT in effect, but signal group 24 is in effect. Also note that signal group 13 is not used. The example assumes a 3.0 second yellow duration and a 2.0 second red duration.

```
-- SEQUENCE
-- 46 51        ascCurrentTick2 = 18001 tenths of a second from the top of the hour
-- 0C 40        spatStatus2. Bits 6, 10, and 11 are TRUE. Bit 6 indicates Traffic Dependent mode.
-- 01           spatEnabledLanesCount
-- 0E           spatEnabledLanesStatus
-- 0F           signalGroupEntryCount = 15 signalGroupEntryNumbers
-- SEQUENCE OF (SignalStatusData2)
--   SEQUENCE # 1 (signalGroupEntryNumber=1 / movementEventNumber=1)
-- 01           signalGroupEntryNumber
-- 05           signalState2. Indicates stop-And-Remain.
-- 46 84        signalStateMinEndTick2. Minimum End Time is 18052 tenths of a second from the top of
                the hour
```

 © 2023 AASHTO / ITE / NEMA

```
-- 46 BE        signalStateMaxEndTick2. 18110 tenths of a second from the top of the hour
-- 8D 0F        signalStateNextTick2. A value of 36111 is used to represent unknown.
-- 8D 0F        signalStateStartTick. The Start Time of the current movement state is not sent.
--   SEQUENCE # 2 (signalGroupEntryNumber=1 / movementEventNumber=2)
-- 01           signalGroupEntryNumber
-- 08           signalState2. Indicates protected-Movement-Allowed
-- 8D 0F        signalStateMinEndTick2. A value of 36111 is used to represent unknown.
-- 8D 0F        signalStateMaxEndTick2. A value of 36111 is used to represent unknown.
-- 8D 0F        signalStateNextTick2. A value of 36111 is used to represent unknown.
-- 8D 0F        signalStateStartTick. Next Start Time is equal to the Minimum End Time.
--   SEQUENCE # 3 (signalGroupEntryNumber=2 / movementEventNumber=1)
-- 02           signalGroupEntryNumber
-- 07           signalState2. Indicates permissive-Movement-Allowed.
-- 46 52        signalStateMinEndTick2. Minimum End Time is 18002 tenths of a second from the top of
                the hour
-- 46 8C        signalStateMaxEndTick2. 18060 tenths of a second from the top of the hour
-- 8D 0F        signalStateNextTick2. A value of 36111 is used to represent unknown.
-- 8D 0F        signalStateStartTick. The Start Time of the current movement state is not sent.
--   SEQUENCE # 4 (signalGroupEntryNumber=2 / movementEventNumber=2)
-- 02           signalGroupEntryNumber
-- 09           signalState2. Indicates permissive-clearance (9)
-- 46 70        signalStateMinEndTick2. Minimum End Time is 18032 tenths of a second from the top of
                the hour
-- 46 AA        signalStateMaxEndTick2. 18090 tenths of a second from the top of the hour
-- 8D 0F        signalStateNextTick2. A value of 36111 is used to represent unknown.
-- 46 70        signalStateStartTick. Next Start Time is equal to the Minimum End Time.
…
--   SEQUENCE # 24 (signalGroupEntryNumber=12 / movementEventNumber=2)
-- 0C           signalGroupEntryNumber
-- 07           signalState2. Indicates permissive-Movement-Allowed.
-- 47 2E        signalStateMinEndTick2. Minimum End Time is 18222 tenths of a second from the top of
                the hour
-- 47 EA        signalStateMaxEndTick2. 18410 tenths of a second from the top of the hour
-- 8D 0F        signalStateNextTick2. A value of 36111 is used to represent unknown.
-- 47 2E        signalStateStartTick. Next Start Time is equal to the Minimum End Time.
--   SEQUENCE # 25 (signalGroupEntryNumber=15 / movementEventNumber=1)
-- 0F           signalGroupEntryNumber
-- 07           signalState2. Indicates permissive-Movement-Allowed.
-- 46 C0        signalStateMinEndTick2. Minimum End Time is 18112 tenths of a second from the top of
                the hour
-- 47 36        signalStateMaxEndTick2. 18230 tenths of a second from the top of the hour
-- 8D 0F        signalStateNextTick2. A value of 36111 is used to represent unknown.
-- 8D 0F        signalStateStartTick. The Start Time of the current movement state is not sent.
…
--   SEQUENCE # 29 (signalGroupEntryNumber=24 / movementEventNumber=1)
-- 18           signalGroupEntryNumber
-- 05           signalState2. Indicates stop-And-Remain.
-- 46 F2        signalStateMinEndTick2. Minimum End Time is 18162 tenths of a second from the top of
                the hour
-- 47 68        signalStateMaxEndTick2. 18280 tenths of a second from the top of the hour
-- 8D 0F        signalStateNextTick2. A value of 36111 is used to represent unknown.
-- 8D 0F        signalStateStartTick. The Start Time of the current movement state is not sent.
--   SEQUENCE # 30 (signalGroupEntryNumber=24 / movementEventNumber=2)
-- 18           signalGroupEntryNumber
-- 07           signalState2. Indicates permissive-Movement-Allowed.
```

© 2023 AASHTO / ITE / NEMA Copy Per RTM Distribution Permission

-- 47 88 signalStateMinEndTick2. Minimum End Time is 18312 tenths of a second from the top of the hour
-- 48 4E signalStateMaxEndTick2. 18510 tenths of a second from the top of the hour
-- 8D 0F signalStateNextTick2. A value of 36111 is used to represent unknown.
-- 47 88 signalStateStartTick. Next Start Time is equal to the Minimum End Time.

#### F.3.3.4 Intersection Status

DE_IntersectionStatusObject is a required data element when broadcasting an SAE J2735 SPaT message. DE_IntersectionStatusObject consists of several bit fields that must be populated—most of the bits are populated by the controller while some bits are populated by the CV Roadside Process. The traffic controller uses the spatStatus2 object to provide these status bits to the CV Roadside Process. See Sections 3.6.3.1 and 3.6.3.2 for the performance requirements to send spatStatus2 to the CV Roadside Process.

This section provides additional guidance for each bit for spatStatus2.

##### F.3.3.4.1 Manual Control

Represented by Bit 0 in spatStatus2, Manual Control indicates to the receiver of this information that the controller is "not in control," thus the controller generally does not know when the movement phase state will change. Under certain conditions, the controller may know the minimum end time for an interval, such as a yellow interval, in which case the controller will report the minimum end time. An external entity, such as a police officer at the cabinet or an operator at a traffic management center, is controlling the duration of certain intervals. When in manual control, the controller is unaware if the interval may terminate early or the interval may dwell for a longer period of time.

When manual control is "active" and the controller is in a green interval:

- the minimum time of change will be equal to the greater of the current time plus the minimum green time remaining (if in effect), or the assured green end time if the AGP is in use;
- while the controller is in a green dwell interval, the minimum time of change will not be less than 0.1 seconds; and
- the value for maximum time of change will be unknown.

When manual control is "active" and the controller is in a vehicle/pedestrian change or clearance interval that is not timed:

- the minimum time of change will not be less than 0.1 seconds; and
- the value for maximum time of change will be unknown.

When manual control is "active," the controller is in a vehicle/pedestrian change or clearance interval, and the interval durations (such as yellows) are timed, then the controller will provide the known TimeChangeDetails values.

The movement phase states are known by the controller in manual control, and should be reflected in the SPaT output.

##### F.3.3.4.2 Stop Time

Represented by Bit 1 in spatStatus2, Stop Time indicates to the receiver of this information that all counting/timing by the controller has stopped, thus most TimeChangeDetails are unknown.

When the controller receives a stop time input, the active (frozen) controller state on the affected (stopped) ring shall remain as the basis for SPaT generation. Even if the stop time duration is unknown, the SPaT output (movement phase state) will remain consistent to the current phase timers.

Copy Per RTM Distribution Permission © 2023 AASHTO / ITE / NEMA

If the form of stop time input allows continuation of countdown timers for clearance intervals or other timers, the TimeChangeDetails will be adjusted accordingly. Otherwise, the values for TimeChangeDetails will be set to unknown.

#### F.3.3.4.3 Failure Flash

Represented by Bit 2 in spatStatus2, Failure Flash indicates to the receiver of this information that the controller is in a flashing condition and the flashing operation must be terminated by a source external to the controller—that is, the end of the flash condition is indeterminate.

Generally, there are three types of Failure Flash:

- "Monitor Flash" is a flash controlled by the monitor in the following two scenarios. In both cases, the controller sets NTCIP unitFlashStatus to mmu (6) during Monitor Flash:
    - When resuming operation after a power loss or interruption, the monitor keeps the Flash Bus energized for a minimum of 6 seconds before energizing the Signal Bus and transferring control to the controller.
    - When a fault is detected by the monitor, it energizes the Flash Bus until either the fault is cleared by pressing the Reset button on the monitor (latching fault) or, with certain types of faults, when the condition that caused the fault is no longer present (non-latching fault).
- "Fault Monitor Flash" occurs when the controller detects an anomaly in the components within the field cabinet, such as a mismatch between its copy of the permissive channels and the signal monitoring unit's copy of the permissive channels. The way the controller causes Fault Monitor Flash differs by cabinet architecture. For example, the controller sets the Fault Monitor output to FALSE in NEMA TS 2 Type 1 cabinets and sets Message Type 62 Bit 1 to 1 in ITS and ATC cabinets. The controller exits Fault Monitor Flash when the anomaly is no longer present. Contrast Fault Monitor Flash with Fault Flash, which is initiated by the monitor and persists until the monitor is reset. The controller sets NTCIP unitFlashStatus to faultMonitor (5) during Fault Monitor Flash.
- "Local Flash" is a flash controlled by human-operated switches in the cabinet, typically labeled "AUTO/FLASH," that is used by technicians to flash the signals when performing maintenance on the controller (Tech Flash) or by police during unusual traffic conditions or situations (Police Flash). The controller sets NTCIP unitFlashStatus to localManual (4) during Local Flash.

When the intersection is in Failure Flash, the end of Failure Flash is indeterminate because the controller does not know when the monitor is going to be reset (for Monitor Flash or Fault Monitor Flash), when the condition that caused the fault is no longer present, or when the flash switch is going to be moved from "FLASH" to "AUTO." Therefore, valid numeric values for the TimeChangeDetails during Cabinet Flash cannot be supplied by the controller. Thus, the values for TimeChangeDetails are undefined or unknown.

Both Monitor Flash and Local Flash are considered to be Cabinet Flash. Cabinet flash is a flash condition initiated and terminated by a source external to the controller. Fault Monitor Flash is initiated by the controller, but terminated by a source external to the controller.

During Cabinet Flash, the signal indications are determined by cabinet wiring (jumpers or flash program blocks) rather than controller software, so the controller may not have intrinsic knowledge of the signal indications (i.e., the controller may not know the movement phase states).

- If the cabinet architecture allows the controller to monitor the real-time voltage and current measurements, and the controller can determine the colors (Yellow, Red, or Dark) of the signal indications during Cabinet Flash, then the controller can provide the values of the Movement Phase States.
- If the controller is unable to monitor the real-time voltage and current measurements, the controller will provide a movement phase state of unavailable for all movements.

Certain cabinet architectures such as NEMA TS 1 do not define Flash Sense inputs to the controller. Deployers using these cabinets are cautioned that, without special accommodations, controllers running

© 2023 AASHTO / ITE / NEMA Copy Per RTM Distribution Permission

in these cabinets do not know that Cabinet Flash is active and may continue to cycle normally and erroneously provide normal time change details and movement phase states to OBUs/MUs during Cabinet Flash. Thus, controllers that cannot determine if Cabinet Flash is active are PROHIBITED from providing any SPaT data to the RSU.

Note: An intersection can be in either Cabinet Flash or Controller Flash, but not both.

Note: Some transportation agencies, as part of their operational policy or local laws or regulations, may not allow the controller to broadcast that an intersection is in failure flash. As noted in Section 2.7, operational policies, rules, and regulations take precedence. If a transportation agency does not permit broadcast of Failure Flash, then all values for TimeChangeDetails shall be set to unknown.

#### F.3.3.4.4 Preempt Control

Represented by Bit 3 in spatStatus2, Preempt Control indicates to the receiver of this information that the controller is actively servicing a preemption request. The TimeChangeDetails for the intersection may suddenly change as the controller changes from "normal" operations to servicing a preemption request, which may require earlier end times for each subsequent interval as the controller quickly transitions to serve the movement requested.

In cases of an active Preemption, override values may be used to calculate the TimeChangeDetails values—such as preemptMinimumGreen or preemptEnterPedClear. The TimeChangeDetails for the intersection during the preempt clearance phases while the controller is servicing the preemption request are generally known and should be reflected in the SPaT data provided.

When the controller is in the dwell phase of the preemption service:

- the minimum time of change will be equal to the current time plus the minimum green time (if in effect) or minimum dwell time remaining;
- once the minimum duration times for the dwell phase are satisfied, the minimum time of change will not be less than 0.1 seconds unless the green termination was commanded, and the field outputs change is imminent; and
- the value for maximum time of change will be the maximum dwell time (if available) or an appropriate value as timed by the controller until the controller determines when it will exit out of the dwell phase.

The TimeChangeDetails for the intersection during the exit phases while the controller is servicing the preemption request are generally known and should be reflected in the SPaT data provided.

The movement phase states are known by the controller while servicing the preemption request, and should be reflected in the Movement Phase State.

If the controller is in a controller flash condition while servicing a preemption request, or is in a controller flash condition as a result of a preemption request, the Standby Operation bit (see F.3.3.4.8) will also be active.

#### F.3.3.4.5 Priority Control

Represented by Bit 4 in spatStatus2, Priority Control indicates to the receiver of this information that the controller is actively servicing a priority request and thus, the TimeChangeDetails for the intersection may suddenly change as the controller changes from "normal" operations to servicing a priority request as the controller transitions to serve the movement requested.

The TimeChangeDetails for the intersection while the controller is servicing the priority request are generally known and should be reflected in the SPaT data provided. The Movement Phase States also

Copy Per RTM Distribution Permission © 2023 AASHTO / ITE / NEMA

are known by the controller while servicing the priority request, and should be reflected in the SPaT data provided.

If the controller supports NTCIP 1211, priority active is enabled when the priorityStrategyRequestStatusInCO for any priority request is a value of requestQueued (2), or activeProcessing (4). The priority bit is not active when the request for service can be fulfilled without changes to the current signal timing because there is no change to the TimeChangeDetails.

#### F.3.3.4.6 Fixed Time Operation

Represented by Bit 5 in spatStatus2, Fixed Time Operation indicates to the receiver of this information that the controller is operating in fixed time and thus the values in TimeChangeDetails are not dynamically changing cycle by cycle. The TimeChangeDetails for the intersection while the controller is in fixed time operation are generally known and should be reflected in the SPaT data. The movement phase states are known by the controller during fixed time operation, and should be reflected in the SPaT data.

If the controller is in Manual Control, Stop Time, or Standby Operation, then Fixed Time Operation should be disabled.

#### F.3.3.4.7 Traffic Dependent Operation

Represented by Bit 6 in spatStatus2, Traffic Dependent Operation indicates to the receiver of this information that the controller is operating based on different levels of traffic parameters (requests, duration of gaps, or more complex parameters), and not a fixed time mode.

The values for TimeChangeDetails for the intersection while the controller is in traffic dependent operation may change frequently as the traffic parameters (demand) changes and should be reflected in the SPaT data.

The movement phase states are known by the controller during traffic dependent operation, and should be reflected in the SPaT data.

Semi-actuated control, which is a legacy term, is considered traffic dependent operation (non-fixed time).

If the controller is in Manual Control, Stop Time, or StandbyOperation, then Traffic Dependent Operation should be disabled.

The controller cannot be in Fixed Time Operation and Traffic Dependent Operation simultaneously.

#### F.3.3.4.8 Standby Operation

Represented by Bit 7 in spatStatus2, StandbyOperation indicates that the controller is in a flashing condition but the controller will be aware of when the controller will exit the flashing condition. StandbyOperation indicates to the receiver of this information that the intersection is in a flash condition but the end of the flash condition is determinate at some point. StandbyOperation, also called soft flash, is initiated by the controller through the Signal Bus (load switches or switch packs), thus the signal indications (flashing red, yellow, or not at all/dark) are controlled by the controller, so the movement phase states are known by the controller and are reflected in the TimeChangeDetails.

Generally, there are three types of StandbyOperation:

- "Startup Flash" is a transitory interval timed immediately after the monitor transfers control to the controller. The duration of Startup Flash is controlled by the NTCIP unitStartupFlash object, which may be 0. The controller sets NTCIP unitFlashStatus to startup (7) during Startup Flash. The following TimeChangeDetails are deterministic during Startup Flash:
    - Minimum End Time: use NTCIP 1202 v03A unitStartupFlash.
    - Maximum End Time: use NTCIP 1202 v03A unitStartupFlash.

© 2023 AASHTO / ITE / NEMA 

- "Automatic Flash" is commanded by NTCIP Pattern 255, either manually or on a scheduled basis. It is typically used as an operational strategy during off-peak or overnight times when steady (stop-and-go) operation is not warranted. The controller sets NTCIP unitFlashStatus to automatic (3) during Automatic Flash. The following time change intervals may be deterministic during Scheduled Flash:
    - Minimum End Time: use NTCIP 1202 v03A schedules (TOD schedule look ahead is optional per section)
    - Maximum End Time: use NTCIP 1202 v03A schedules (TOD schedule look ahead is optional per section)
- "Preempt Flash" occurs during a preempt's Dwell state if the preempt's NTCIP preemptControl Bit 3 (Flash Dwell) = 1. The controller sets NTCIP unitFlashStatus to preempt (8) during Preempt Flash. The following TimeChangeDetails may be deterministic during Preempt Flash:
    - Minimum End Time: use NTCIP 1202 v03A preemptDwellGreen
    - Maximum End Time: use NTCIP 1202 v03A preemptMaximumPresence

For Startup Flash and Automatic Flash, the controller enters and exits StandbyOperations in a controlled, deterministic manner and, as such, can provide TimeChangeDetails information for flash entry and flash exit intervals. For other StandbyOperations, the controller must satisfy specific conditions before it exits out of flash conditions. For example, for Preempt Flash, a train must clear the track crossing before the controller starts timing the preempt exit phases. Once the train exits the track crossing, the controller can deterministically provide the time it will exit out of flash and provide numeric values for TimeChangeDetails.

Note that when the controller flash is performed through the Flash Bus due to either controller software behavior (for example, by setting the Fault Monitor output to FALSE) or if the cabinet is specially wired (e.g., connecting a Flash output from the controller to the cabinet's Main Contactor), signal indications are determined by cabinet wiring (jumpers or flash program blocks) rather than controller software and the controller does not have intrinsic knowledge of the signal indications. See the discussion on Cabinet Flash in the Failure Flash section (Section F.3.3.4.3).

#### F.3.3.4.9 Failure Mode

Represented by Bit 8 in spatStatus2, Failure Mode indicates to the receiver of this information that the controller is not operating properly or has failed. Examples of a controller failure mode include a process in the controller that is not operating properly, a memory data error was detected, or an internal voltage failure was detected. Most failures will be fatal and would not result in this bit being SET, but for non-catastrophic failures, this bit can be set and the controller would likely activate cabinet flash.

#### F.3.3.4.10 Controller Off

Represented by Bit 9 in spatStatus2, this bit in the DE_IntersectionStatusObject representing the controller is OFF is not set by the controller, thus this bit is reserved. This bit is set by the CV Roadside Process to indicate it has not received valid SPaT data from the controller in the last 300 milliseconds.

#### F.3.3.4.11 Recent MAP Message Update

Represented by Bit 10 in spatStatus2, Recent MAP Message Update indicates that the MAP message transmitted by the RSU was recently updated. However, in practice the DE_IntersectionStatusObject is not used by RLVW applications on OBUs. RLVW applications are expected to use the revision counter in the MAP message to determine if there are changes in the MAP messages. Since the controller is generally unaware of what MAP messages are being broadcast, this information is not set by the controller.

By default and consistent with CTI 4501, this bit is always a value of 1.

Copy Per RTM Distribution Permission © 2023 AASHTO / ITE / NEMA

#### F.3.3.4.12 Recent Enabled Lanes Update

Represented by Bit 11 in spatStatus2, Recent Enabled Lanes Update indicates that the lane definitions or enabled lanes in the SPaT message transmitted by the RSU have recently been updated. However, in practice this bit is not used by RLVW applications on OBUs. RLVW applications are expected to use the revision counter in the SPaT and MAP messages to determine if there are changes in either message. There is no clear definition of "recently been updated" and although the controller may set this information, CTI 4501 v01.01 states, by default, that this bit is SET to a value of 1.

By default and consistent with CTI 4501, this bit is always a value of 1.

#### F.3.3.4.13 No MAP Available

Represented by Bit 12 in spatStatus2, No MAP Available indicates that the MAP message being broadcasted is unavailable or invalid. A MAP message can be broadcasted without a SPaT message, but the SPaT message must be sent with a valid MAP message describing the intersection associated with the SPaT message. Since the controller is generally unaware of what MAP messages are being broadcast by the CV Roadside Process, this information is generally SET by the CV Roadside Process.

Situations when a MAP may be invalid include:

- Temporary lane closures, when the contents of the MAP message broadcasted by the RSU may not be valid. This applies when a contractor is setting up cones/barrels for lane closures, presence of flaggers, etc.
- The IOO decides not to generate a MAP message, maybe for operational or maintenance purposes.
- The MAP message doesn't have a valid IEEE 1609.2-2016 certificate.

However, the first two situations above may require that field maintenance personnel also mark the SPaT data generated by the controller be invalid (see 3.5.4.1.3.15), and the controller is generally more accessible by the field maintenance personnel than the RSU (which is sealed for security purposes and may be mounted on a pole). Also, since the SPaT message is a dynamic message (while the MAP message is generally a static message, i.e., changes infrequently), and has a bit to indicate the MAP is invalid, the ASC WG agreed to add a requirement to mark the MAP message invalid via the traffic controller.

#### F.3.3.4.14 No SPaT Available

Represented by Bit 13 in spatStatus2, No SPaT Available indicates that the SPaT message broadcasted is unavailable or invalid. No SPaT Available indicates to the receiver of this information that the contents of the SAE SPaT message (DE_IntersectionStatusObject except for this bit, TimeChangeDetails, MovementPhaseState) should be ignored and not used by applications.

Situations when a SPaT message may be invalid include:

- The signalized intersection is under test and is not broadcasting a valid SPaT message.
- Temporary lane closures, when the contents of the MAP message broadcasted by the RSU may not be valid. This applies when a contractor is setting up cones/barrels for lane closures, presence of flaggers, etc.
- The CV Roadside Process has not received valid SPaT data from the controller within the last 300 milliseconds.
- A corresponding valid MAP message is not being broadcasted (the SPaT message must be sent with a valid MAP message describing the intersection associated with the SPaT message).

spatOptions allows a management station to indicate if the SPaT message is valid or invalid. For the latter two bullets above, since the controller is generally unaware of what MAP messages are being broadcast by the CV Roadside Process, or if the SPaT data provided by the controller is received by the CV Roadside Process, this bit would be set by the CV Roadside Process.

© 2023 AASHTO / ITE / NEMA Copy Per RTM Distribution Permission

### F.3.3.5 Movement Phase State

This section provides additional guidance beyond the description in SAE J2735 for providing the movement phase state of each allowed movement at a signalized intersection.

DE_MovementPhaseState is a required data element when broadcasting an SAE J2735 SPaT message. DE_MovementPhaseState describes the movement state (both current and future) for a signalGroupID. The signalGroupID maps a group of common movements, defined as a connection between an ingress lane to an egress lane in the MAP message, at a signalized intersection to a movement state. The controller then provides the movement phase state and the TimeChangeDetails for each signalGroupID.

The controller uses the signalState2 object to provide the movement phase state for each signalGroupID to the CV Roadside Process. CTI 4501 requires that the controller provide the movement phase state for the current and the next interval. This is accomplished by the movementEventNumber, where movementEventNumber.1 represents the current interval and movementEventNumber.2 represents the next interval. See Sections 3.6.3.1 and 3.6.3.2 for the performance requirements to send signalState2 to the CV Roadside Process.

SAE J2735 describes signal state data elements and MAP data so that external roadway users can understand the current and future state signalization of the roadway. This status is provided in a simplified format using MovementPhaseState and TimeChangeDetails to represent the roadway indications. This mapping implies an assumption that the traffic controller can map its perceived signal timing into the signal indications (Signal Groups) that are presented to the roadway users.

In real-world applications, this is not always the case. Overlaps, Controller I/O processing, In-Cabinet output panels, and other possible esoteric applications can have an impact to override the actual signal outputs that are displayed to the roadway users to control their movements on associated Lane IDs. Given the critical nature of SPaT messages for real-time safely applications, intersections that generate SPaT data must remove any in-cabinet output panels, controller output logic processing, or other post-processed means of output override that would render the SPaT data inaccurate relative to the signal group displays above the roadway. In cases where overlaps are mapped to control the signal outputs, it is the responsibility of the traffic controller to generate SPaT data consistent to the overlap and/or phase states that are actively controlling the signal group. This output assignment often occurs on a time of day and/or preemptive basis and cannot easily be performed outside the traffic controller itself. If the traffic controller is both independently controlling phase timing as well as generating the SPaT message, it must consider all internally known details that will affect the controller-level outputs prior to establishing these TimeChangeDetails. A cabinet with external logic cannot send a SPaT message.

#### F.3.3.5.1 signalGroupEntryTable

The signalGroupEntryTable is to be completed by a signal timing engineer to represent the signal phasing of an intersection for each movement at an intersection. Each movement at an intersection (signalGroupIntersection) is identified by a signalGroupID number (signalGroupID). signalGroupControlSource and signalGroupControlType generally define the vehicle phase, pedestrian phase, or overlap number associated with the signalGroupID.

signalGroupGreenType defines the type of movement allowed—whether the movement is protected, permissive, or protected-permissive. For vehicle movements, steady green arrows (left, through, or right) are considered protected movements, and all green balls are represented as permissive movements. For pedestrian movements, if there are no conflicts with any movement other than another pedestrian movement during a pedestrian WALK interval, then the signalGroupGreenType is a protected movement; otherwise, it is a permissive movement. preMovement informs the traveler that a permitted (protected or permissive) movement is imminent, such as a light rail vehicle, but otherwise is not common in the U.S.

Copy Per RTM Distribution Permission © 2023 AASHTO / ITE / NEMA

signalGroupRedType defines the type of movement during red signal indications—whether the traveler is to stop and remain (at the stop bar for vehicles), or can stop then proceed (such as for flashing red indications or right turn on red).

For movements that can be protected or permissive, the signalGroupPermissiveControlSource and signalGroupPermissiveControlType defines the phase or overlap that determines if the movement is protected or permissive. Otherwise, these objects can be ignored.

The signalGroupLane defines the enabled lanes that determine if the signalGroupID for that row is active. If the lane numbers specified are enabled, then the signalGroupID for that row is active. If no lanes are specified, then the signalGroupID for that row is always active.

Figure 13 represents an example intersection depicting the phases (Ph#) and overlaps (OLn), the lane numbers, and the signalGroupID. Lane numbers within a box are revocable lanes (e.g., lanes 4 and 14).

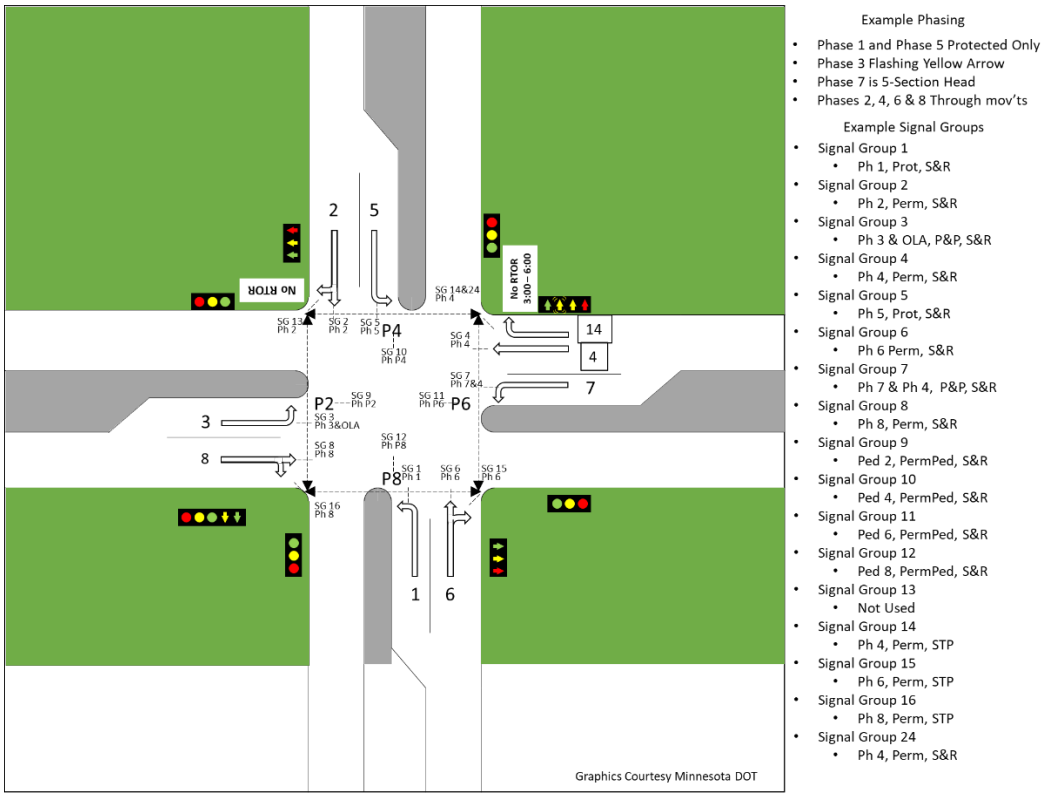


**Figure 13 Example Intersection Diagram**

Figure 14 represents how the signalGroupEntryTable for the signalized intersection in Figure 13 would be completed. In the example intersection, whether Signal Group 3 is a protected-permissive green is determined by Vehicle Phase 3 plus the 4-section Flashing Yellow Arrow Overlap A controlled left turn movement, while whether Signal Group 7 is a protected-permissive green is determined by Vehicle Phase 7 and Vehicle Phase 4 for the 5-section controlled left turn movement.

Similarly, whether Signal Group 9 and Signal Group 11 are protected-permissive walk movements are determined by Pedestrian Phase 2 and Pedestrian Phase 6 and Vehicle Phase 2 and Vehicle Phase 6, respectively. Note: It is assumed that if the vehicle phase is red when the associated pedestrian phase is walk, then the pedestrian phase is either a leading pedestrian interval or a "Barnes dance" pedestrian interval, not in conflict with any vehicle green or yellow intervals.

© 2023 AASHTO / ITE / NEMA Copy Per RTM Distribution Permission

signalGroupIDs 1 to 8 represent either through movements or left turn movements for Vehicle Phases 1 to 8—thus, the signalGroupRedType is Stop And Remain for those vehicle phases when the signal indication for that movement is red. signalGroupIDs 14 to 16 represent the right turn movements for Vehicle Phases 4, 6, and 8, but the signalGroupRedType for these signalGroupIDs is Stop Then Proceed, indicating that right turn on red is permitted. However, note that signalGroupID 13 for the right turn movement for Vehicle Phase 2 is unnecessary because right-turn-on-red is prohibited and Stop And Remain is already addressed in signalGroupID 2.

However, the Right Turn on Red by time-of-day for Vehicle Phase 4 is determined by which revocable lane set (1 or 2—see Table 10) is enabled. A right-turn-on-red scenario is presented in more detail below.

| signalGroupEntryNumber | signalGroupIntersection | signalGroupID | signalGroupControlSource | signalGroupControlType | signalGroupGreenType | signalGroupRedType | signalGroupPermissiveControlSource | signalGroupPermissiveControlType | signalGroupLane |
|---|---|---|---|---|---|---|---|---|---|
| 1 | 1 | 1 | 1 | phaseVehicle (2) | protectedMovementAllowed (4) | StopAndRemain (3) | 0 | none (2) | 0 |
| 2 | 1 | 2 | 2 | phaseVehicle (2) | permissiveMovementAllowed (3) | StopAndRemain (3) | 0 | none (2) | 0 |
| 3 | 1 | 3 | 3 | phaseVehicle (2) | protectedPermissive (5) | StopAndRemain (3) | 1 | overlap (5) | 0 |
| 4 | 1 | 4 | 4 | phaseVehicle (2) | permissiveMovementAllowed (3) | StopAndRemain (3) | 0 | none (2) | 0 |
| 5 | 1 | 5 | 5 | phaseVehicle (2) | protectedMovementAllowed (4) | StopAndRemain (3) | 0 | none (2) | 0 |
| 6 | 1 | 6 | 6 | phaseVehicle (2) | permissiveMovementAllowed (3) | StopAndRemain (3) | 0 | none (2) | 0 |
| 7 | 1 | 7 | 7 | phaseVehicle (2) | protectedPermissive (5) | StopAndRemain (3) | 4 | phaseVehicle (3) | 0 |
| 8 | 1 | 8 | 8 | phaseVehicle (2) | permissiveMovementAllowed (3) | StopAndRemain (3) | 0 | none (2) | 0 |
| 9 | 1 | 9 | 2 | phasePedestrian (3) | protectedPermissive (5) | StopAndRemain (3) | 2 | phaseVehicle (3) | 0 |
| 10 | 1 | 10 | 4 | phasePedestrian (3) | permissiveMovementAllowed (3) | StopAndRemain (3) | 0 | none (2) | 0 |
| 11 | 1 | 11 | 6 | phasePedestrian (3) | protectedPermissive (5) | StopAndRemain (3) | 6 | phaseVehicle (3) | 0 |
| 12 | 1 | 12 | 8 | phasePedestrian (3) | permissiveMovementAllowed (3) | StopAndRemain (3) | 0 | none (2) | 0 |
| 13 | 1 | 13 | | | | | | | |
| 14 | 1 | 14 | 4 | phaseVehicle (2) | permissiveMovementAllowed (3) | stopThenProceed (2) | 0 | none (2) | 1 |
| 15 | 1 | 15 | 6 | phaseVehicle (2) | permissiveMovementAllowed (3) | stopThenProceed (2) | 0 | none (2) | 0 |
| 16 | 1 | 16 | 8 | phaseVehicle (2) | permissiveMovementAllowed (3) | stopThenProceed (2) | 0 | none (2) | 0 |
| 17 | 1 | 24 | 4 | phaseVehicle (2) | permissiveMovementAllowed (3) | StopAndRemain (3) | 0 | none (2) | 2 |

**Figure 14 Example signalGroupEntryTable**

#### F.3.3.5.2 agencySignalStateTable

The agencySignalStateTable is a lookup table to determine the movement phase state (both current and for the next interval) for each signalGroupID defined for the signalized intersections. The agencySignalStateTable has default values configured but is customizable. While the movement phase state typically depends on what color a signal is, the state may also depend on whether the signal is for a vehicle or pedestrian, whether turns on red are permitted, and whether the movement is protected or permissive (which may be driven by another source in the controller's output).

Using the entries in the signalGroupEntryTable, the current and future movementPhaseState for each signalGroupID is determined by:

- **agencySignalStateColor.** The current signal indication color for the signalGroupID defined by the signalGroupControlType/signalGroupControlSource.
- **agencySignalStateControlType.** The control type (vehicle or pedestrian) for the signalGroupID. Vehicle, bicycle, and transit phases and overlaps are considered a vehicle control type. Pedestrian phases and pedestrian overlaps are considered a pedestrian control type.
- **agencySignalStateOptions.** This object contains three pieces of information.
    - Bits 0-1. The signalGroupRedType for the signalGroupID. It is either stopAndRemain, stopThenProceed, or not applicable.
    - Bit 2 is reserved for preMovement green, although it is not used in the United States in practice.
    - Bits 3-4. The signalGroupGreenType for the signalGroupID. When the movement is allowed, it is either a permissive movement, a protected movement, could be permissive or protected, or not applicable.
    - Bits 5-9. The current signal indication color for the signalGroupPermissiveControlType / signalGroupPermissiveControlSource of the signalGroupID. If all Bits are FALSE, then the signal indication color is not applicable. If more than 1 bit is TRUE, then either signal indication color is applicable (e.g., if Bits 7 and 8 are TRUE, then either Flashing Yellow or Green).
- **agencySignalStateValue.** The valid movement phase state for the signalGroupID. The valid movement phase states are defined in SAE J2735 DE_MovementPhaseState.

 © 2023 AASHTO / ITE / NEMA

The values in Figure 15 are the default values for the agencySignalStateTable. If the controller provides features that are not compatible with the logic in this lookup table, the controller vendor must provide lookup logic such that the SPaT data reflects the movement phase state conveyed by the physical signal indications in the field given the vendor supported features. An agency may also add, delete, or change row entries as appropriate depending on their agency-specific rules, regulations, and standards.

| Row | agencySignalStateColor | agencySignalStateControlType | signalGroupGreenType agencySignalStateOptions Bits 2 - 4 | signalGroupPermissiveControl Color agencySignalStateOptions Bits 5- 9 | signalGroupRedType agencySignalStateOptions Bits 0 - 1 | agencySignalStateValue |
|---|---|---|---|---|---|---|
| 1 | green (4) | vehicle (2) | Bit 4 = TRUE | Bits 5-9 = FALSE | Bits 0-1 = FALSE | protectedMovementAllowed (8) |
| 2 | green (4) | vehicle (2) | Bit 3 = TRUE | Bits 5-9 = FALSE | Bits 0-1 = FALSE | permissiveMovementAllowed (7) |
| 3 | green (4) | vehicle (2) | Bits 3 & 4 = TRUE | Bits 5-9 = TRUE | Bits 0-1 = FALSE | protectedMovementAllowed (8) |
| 4 | green (4) | pedestrian (3) | Bit 4 = TRUE | Bits 5-9 = FALSE | Bits 0-1 = FALSE | protectedMovementAllowed (8) |
| 5 | green (4) | pedestrian (3) | Bit 3 = TRUE | Bits 5-9 = FALSE | Bits 0-1 = FALSE | permissiveMovementAllowed (7) |
| 6 | green (4) | pedestrian (3) | Bits 3 & 4 = TRUE | Bit 5 = TRUE | Bits 0-1 = FALSE | protectedMovementAllowed (8) |
| 7 | green (4) | pedestrian (3) | Bits 3 & 4 = TRUE | Bit 7 = TRUE | Bits 0-1 = FALSE | permissiveMovementAllowed (7) |
| 8 | green (4) | pedestrian (3) | Bits 3 & 4 = TRUE | Bit 6 = TRUE | Bits 0-1 = FALSE | permissiveMovementAllowed (7) |
| 9 | yellow (3) | vehicle (2) | Bit 4 = TRUE | Bits 5-9 = FALSE | Bits 0-1 = FALSE | protectedClearance (10) |
| 10 | yellow (3) | vehicle (2) | Bit 3 = TRUE | Bits 5-9 = FALSE | Bits 0-1 = FALSE | permissiveClearance (9) |
| 11 | yellow (3) | vehicle (2) | Bits 3 & 4 = TRUE | Bits 5-9 = TRUE | Bits 0-1 = FALSE | protectedClearance (10) |
| 12 | red (2) | vehicle (2) | Bit 4 = TRUE | Bits 5-9 = FALSE | Bit 0 = TRUE | stopThenProceed (4) |
| 13 | red (2) | vehicle (2) | Bit 4 = TRUE | Bits 5-9 = FALSE | Bit 1 = TRUE | stopAndRemain (5) |
| 14 | red (2) | vehicle (2) | Bit 3 = TRUE | Bits 5-9 = FALSE | Bit 0 = TRUE | stopThenProceed (4) |
| 15 | red (2) | vehicle (2) | Bit 3 = TRUE | Bits 5-9 = FALSE | Bit 1 = TRUE | stopAndRemain (5) |
| 16 | red (2) | vehicle (2) | Bits 3 & 4 = TRUE | Bits 7-8 = TRUE | Bits 0-1 = FALSE | permissiveMovementAllowed (7) |
| 17 | red (2) | vehicle (2) | Bits 3 & 4 = TRUE | Bit 6 = TRUE | Bits 0-1 = FALSE | permissiveClearance (9) |
| 18 | red (2) | vehicle (2) | Bits 3 & 4 = TRUE | Bit 5 = TRUE | Bit 0 = TRUE | stopThenProceed (4) |
| 19 | red (2) | vehicle (2) | Bits 3 & 4 = TRUE | Bit 5 = TRUE | Bit 1 = TRUE | stopAndRemain (5) |
| 20 | red (2) | vehicle (2) | Bits 3 & 4 = TRUE | Bit 9 = TRUE | Bits 0-1 = FALSE | stopThenProceed (4) |
| 21 | dark (5) | vehicle (2) | Bits 3 & 4 = TRUE | Bits 7-8 = TRUE | Bits 0-1 = FALSE | permissiveMovementAllowed (7) |
| 22 | dark (5) | vehicle (2) | Bits 3 & 4 = TRUE | Bit 6 = TRUE | Bits 0-1 = FALSE | permissiveClearance (9) |
| 23 | dark (5) | vehicle (2) | Bits 3 & 4 = TRUE | Bit 5 = TRUE | Bit 0 = TRUE | stopThenProceed (4) |
| 24 | dark (5) | vehicle (2) | Bits 3 & 4 = TRUE | Bit 5 = TRUE | Bit 1 = TRUE | stopAndRemain (5) |
| 25 | dark (5) | vehicle (2) | Bits 3 & 4 = TRUE | Bit 9 = TRUE | Bits 0-1 = FALSE | stopThenProceed (4) |
| 26 | red (2) | pedestrian (3) | Bit 4 = TRUE | Bits 5-9 = FALSE | Bits 0-1 = FALSE | stopAndRemain (5) |
| 27 | red (2) | pedestrian (3) | Bit 3 = TRUE | Bits 5-9 = FALSE | Bits 0-1 = FALSE | stopAndRemain (5) |
| 28 | red (2) | pedestrian (3) | Bits 3 & 4 = TRUE | Bits 5-9 = FALSE | Bits 0-1 = FALSE | stopAndRemain (5) |
| 29 | flashingYellow (7) | vehicle (2) | Bits 3 & 4 = FALSE | Bits 5-9 = FALSE | Bits 0-1 = FALSE | cautionConflictingTraffic (11) |
| 30 | flashingRed (6) | vehicle (2) | Bits 3 & 4 = FALSE | Bits 5-9 = FALSE | Bits 0-1 = FALSE | stopThenProceed (4) |
| 31 | flashingRed (6) | pedestrian (3) | Bit 4 = TRUE | Bits 5-9 = FALSE | Bits 0-1 = FALSE | protectedClearance (10) |
| 32 | flashingRed (6) | pedestrian (3) | Bit 3 = TRUE | Bits 5-9 = FALSE | Bits 0-1 = FALSE | permissiveClearance (9) |
| 33 | flashingRed (6) | pedestrian (3) | Bits 3 & 4 = TRUE | Bit 5 = TRUE | Bits 0-1 = FALSE | protectedClearance (10) |
| 34 | flashingRed (6) | pedestrian (3) | Bits 3 & 4 = TRUE | Bit 7 = TRUE | Bits 0-1 = FALSE | permissiveClearance (9) |
| 35 | flashingRed (6) | pedestrian (3) | Bits 3 & 4 = TRUE | Bit 6 = TRUE | Bits 0-1 = FALSE | permissiveClearance (9) |

**Figure 15 Example agencySignalStateTable**

Using the example signalGroupEntryTable in Figure 14, below are some sample signalState2 values:

- For signalGroupEntryNumber 1 (Intersection 1, signalGroupID 1), when phaseVehicle 1 is Green, then Row 1 in the agencySignalStateTable applies because the signalGroupGreenType is protected. So the value for signalState2 for signalGroupEntryNumber 1 is protectedMovementAllowed.
- For signalGroupEntryNumber 3 (Intersection 1, signalGroupID 3), when phaseVehicle 3 is Green and Overlap A is On, then Row 3 in the agencySignalStateTable applies because the signalGroupGreenType is protectedPermissive. So the value for signalState2 for signalGroupEntryNumber 3 is protectedMovementAllowed.
- For signalGroupEntryNumber 9 (Intersection 1, signalGroupID 9), when phasePedestrian 2 is Walk and phaseVehicle 2 is Red, then Row 6 in the agencySignalStateTable applies because the signalGroupGreenType is protectedPermissive. So the value for signalState2 for signalGroupEntryNumber 9 is protectedMovementAllowed. This example may be a leading pedestrian interval.
- For signalGroupEntryNumber 24 (Intersection 1, signalGroupID 24), when phaseVehicle 4 is Red and Lane 14 is enabled, then Row 15 in the agencySignalStateTable applies because the signalGroupGreenType is permissive and signalGroupRedType is stopAndRemain. So the value for signalState2 for signalGroupEntryNumber 24 is stopAndRemain. This example may be a right-turn-on-red by time of day.

In addition, the following guidance is reprinted from CTI 4501, Connected Intersections (CI) Implementation Guide.

© 2023 AASHTO / ITE / NEMA Copy Per RTM Distribution Permission

- **Flashing Yellow Arrow Permissive Movement.** At an intersection that uses a flashing yellow arrow to control a permissive movement as part of a protected-permissive turn, a connected intersection shall use the value of permissive-Movement-Allowed as the current movement state for the signal group when the flashing yellow arrow is active, as defined by DE_MovementPhaseState in SAE J2735_202007.
- **Protected and Permissive Clearance.** A connected intersection shall use the value of protected-clearance or permissive-Clearance as the current movement state of a signal group to correspond with the protected or permissive condition of the allowed movement immediately preceding the current (clearance) interval, as defined by DE_MovementPhaseState in SAE J2735_202007.
- **Conflict Causes Permissive.** When any allowed movement controlled by a signal group includes a maneuver in conflict with any other movement that is in a permitted or clearance state, a connected intersection shall use permissive-Movement-Allowed or permissive-Clearance as the current movement state for the signal group, as defined by DE_MovementPhaseState in SAE J2735_202007. Examples include a green ball with an opposing green ball, and a green ball with a permitted pedestrian movement for a turn.
- **No Conflict Causes Protected.** When an allowed movement controlled by a signal group includes no maneuver in conflict with any other vehicle, pedestrian, or bicycle movement that is in a permitted or clearance state, a connected intersection shall use protected-Movement-Allowed or protected-clearance as the current movement state for the signal group, as defined by DE_MovementPhaseState in SAE J2735_202007.
- **WALK State Enumeration (No Conflict).** When an allowed pedestrian movement has no conflict with a vehicle movement controlled by a signal group that is in a permitted or clearance state, a connected intersection shall use protected-Movement-Allowed as the current movement state for the pedestrian WALK interval, as defined by DE_MovementPhaseState in SAE J2735_202007. Examples of a WALK state with no conflict include leading pedestrian intervals or exclusive pedestrian interval (Barnes dance).
- **WALK State Enumeration (Potential Conflict).** When an allowed pedestrian movement is in conflict with a vehicle movement controlled by a signal group that is in a permitted or clearance state, a connected intersection shall use permissive-Movement-Allowed as the current movement state for the pedestrian WALK interval, as defined by DE_MovementPhaseState in SAE J2735_202007. Examples of a WALK state with potential conflicts include vehicles turning right on green across the pedestrian crosswalk in a WALK state.
- **Flashing DON'T WALK State Enumeration.** A connected intersection shall use the protected-clearance or permissive-Clearance as the current movement state for the pedestrian Flashing DON'T WALK interval, as defined by DE_MovementPhaseState in SAE J2735_202007, to correspond with the protected or permissive condition of the allowed WALK movement immediately preceding the current (clearance) interval.
- **Steady DON'T WALK State Enumeration.** A connected intersection shall use stop-And-Remain as the current movement state for the pedestrian Steady DON'T WALK interval, as defined by DE_MovementPhaseState in SAE J2735_202007.

The ASC WG agreed that steady green arrows (left, through, or right) are represented in DE_MovementPhaseState as protected-Movement-Allowed, and green balls are represented as permissive-Movement-Allowed.

#### F.3.3.5.3 Editing agencySignalStateTable

This section provides details on how to edit the agencySignalStateTable. As noted in Annex F.3.3.5.2, the agencySignalStateTable is expected to be a static table with default values but can be customized for each agency or intersection. It is expected that the controller vendor will create and populate the agencySignalStateTable based on the operating agency's operations and maintenance procedures and policies.

 © 2023 AASHTO / ITE / NEMA

The agencySignalStateColor object is used to identify the current or next (interval) color of the primary source that drives the signal, which may be Red, Yellow, Green, Dark, Flashing Red, or Flashing Yellow. The agencySignalStateType object allows the movement to be specified as a vehicle or pedestrian.

The agencySignalStateOptions object allows multiple properties to be configured for the signal group. The object is an integer with each bit in its binary representation representing different properties for the signal group. Combinations of different properties may result in different movement phase states for the signal group. The following properties are configurable.

- The Red indication may be configured as stopThenProceed or stopAndRemain. This is done using bits 0 and 1 of the agencySignalStateOptions object.
- The Green indication may be configured as preMovement (not used in the United States), protectedMovementAllowed, or permissiveMovementAllowed. This is done using bits 2-4 of the agencySignalStateOptions object. If the movement may be protected or permissive, then both bits 3 and 4 are asserted (TRUE).
- The movement phase state for a signal group may depend on the movement phase state of another source (such as another phase or overlap). Bits 5-9 allow the user to specify the signal indication of that other source to determine the movement phase state of the signal group. Bit 5 is asserted (TRUE) if the signal indication of the other source is red. Bits 7 and 8 are asserted (TRUE) if the signal indication of the other source is either Green or Flashing Yellow. If Bits 5 through 9 are asserted, then the signal indication of the other source can be any, while if none of Bits 5 through 9 are asserted, then the signal indication of the source is not applicable.

Figure 16 shows a four-section signal with a Flashing Yellow Arrow and a green arrow for a left turn from Lane 3. This left turn is a protected-permissive movement; the movement is protected during some portions of the cycle and permissive during other portions of the cycle. The green arrow is controlled by Phase 3 and Overlap A controls the flashing-yellow-arrow, the yellow-arrow, and the red-arrow.

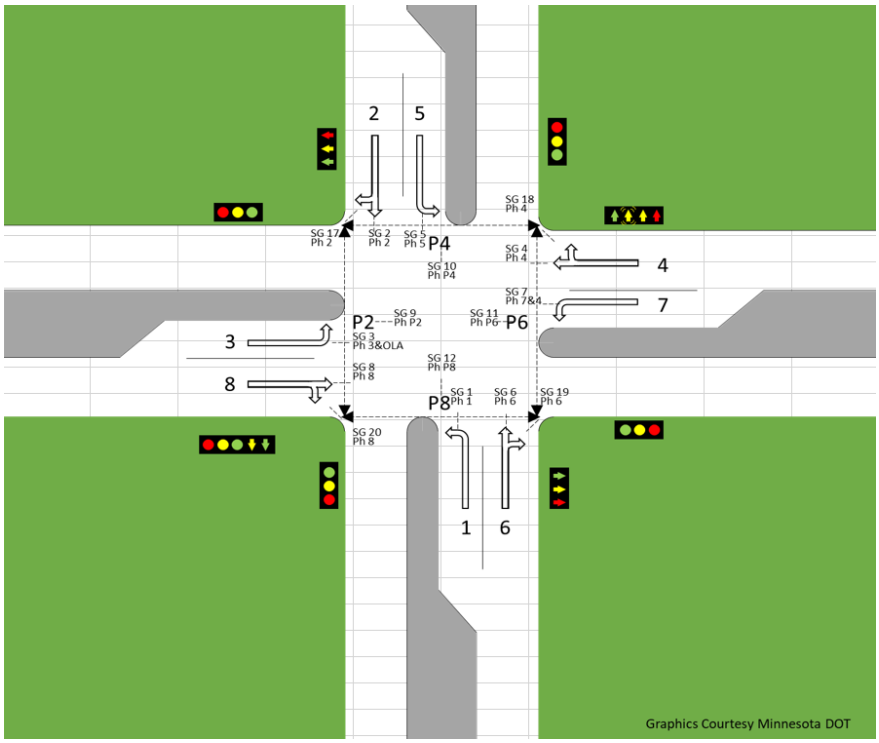


**Figure 16 Example Intersection Diagram 2**

The row in Table 8 contains the details for signalGroupID 3 as copied from the table in Figure 14. The left turn movement is represented as signalGroupID 3, controlled by vehicle phase 3, with a

© 2023 AASHTO / ITE / NEMA 

signalGroupGreenType of protectedPermissive, with its permissive controlled by Overlap A (represented as 1), and is of signalGroupRedType Stop And Remain.

**Table 8 signalGroupEntryTable Example**

| signal GroupID | signalGroup ControlSource | signalGroup ControlType | signalGroup GreenType | signalGroup RedType | signalGroupPermissive ControlSource | signalGroup Permissive ControlType |
|---|---|---|---|---|---|---|
| 3 | 3 | phaseVehicle(2) | protectedPermissive (5) | stopAndRemain(3) | A | overlap(5) |

**Table 9 agencySignalStateTable Excerpt**

| Row | agencySignal StateColor | agencySignal StateControlType | agencySignal StateOptions | agencySignalStateValue |
|---|---|---|---|---|
| 3 | green(4) | vehicle(2) | 1016<br>Bits 3-9 are TRUE | protectedMovementAllowed (8) |
| 11 | yellow(3) | vehicle(2) | 1016<br>Bits 3-9 are TRUE | protectedClearance (10) |
| 16 | red(2) | vehicle(2) | 408<br>Bits 3, 4, 7, & 8 are TRUE | permissiveMovementAllowed (7) |
| 17 | red(2) | vehicle(2) | 88<br>Bits 3, 4, & 6 are True | permissiveClearance (9) |
| 19 | red(2) | vehicle(2) | 56<br>Bits 3, 4, & 5 is True | stopAndRemain (5) |

When vehicle phase 3 is Green, overlap A will be dark, and the signal indication will be showing a solid Green Arrow. Using the agencySignalStateTable in Figure 15, this state is represented by row 3 because the agencySignalStateColor is Green, the agencySignalControlType is vehicle, and agencySignalStateOption is a value of 1016 because the signalGroupGreenType is protectedPermissive (Bits 3 and 4 are TRUE), and the signalGroupPermissiveControlColor is Any (Bits 5-9 are TRUE), and signalGroupRedType is not applicable (Bits 0-1 are FALSE). Thus the agencySignalStateValue for Signal Group ID 3 is protectedMovementAllowed (see the first row in Table 9).

When vehicle phase 3 is Yellow, overlap A is Yellow, and the signal indication is showing a solid Yellow Arrow. Using the agencySignalStateTable in Figure 15, this state is represented by row 11 because the agencySignalStateColor is Yellow, the agencySignalControlType is vehicle, and agencySignalStateOption is a value of 1016 because the signalGroupGreenType is protectedPermissive (Bits 3 and 4 are TRUE), and the signalGroupPermissiveControlColor is Any (Bits 5 – 9 are TRUE), and signalGroupRedType is not applicable (Bits 0 – 1 are FALSE). Thus the agencySignalStateValue for Signal Group ID 3 is protectedClearance (see the second row in Table 9).

When vehicle phase 3 is Red, overlap A is flashing-yellow-arrow, and the signal indication is showing a Flashing Yellow Arrow. Using the agencySignalStateTable in Figure 15, this state is represented by row 16 because the agencySignalStateColor is Red, the agencySignalControlType is vehicle, and agencySignalStateOption is a value of 408 because the signalGroupGreenType is protectedPermissive (Bits 3 and 4 are TRUE), and the signalGroupPermissiveControlColor is Green or Flashing Yellow (Bits 7-8 are TRUE), and signalGroupRedType is not applicable (Bits 0-1 are FALSE). Thus the agencySignalStateValue for Signal Group ID 3 is permissiveMovementAllowed (see the third row in Table 9).

When vehicle phase 3 is Red, overlap A is Yellow, and the signal indication is showing a Solid Yellow Arrow. Using the agencySignalStateTable in Figure 15, this state is represented by row 17 because the agencySignalStateColor is Red, the agencySignalControlType is vehicle, and agencySignalStateOption is a value of 88 because the signalGroupGreenType is protectedPermissive (Bits 3 and 4 are TRUE), and the signalGroupPermissiveControlColor is Yellow (Bit 6 is TRUE), and signalGroupRedType is not

 © 2023 AASHTO / ITE / NEMA

applicable (Bits 0-1 are FALSE). Thus the agencySignalStateValue for Signal Group ID 3 is permissiveClearance (see the fourth row in Table 9).

When vehicle phase 3 is Red, overlap A is Red, and the signal indication is showing a Solid Red Arrow. Using the agencySignalStateTable in Figure 15, this state is represented by row 19 because the agencySignalStateColor is Red, the agencySignalControlType is vehicle, and agencySignalStateOption is a value of 56 because the signalGroupGreenType is protectedPermissive (Bits 3 and 4 are TRUE), and the signalGroupPermissiveControlColor is Red (Bit 5 is TRUE), and signalGroupRedType is not applicable (Bits 0-1 are FALSE). Thus the agencySignalStateValue for Signal Group ID 3 is stopAndRemain (see the fifth row in Table 9).

#### F.3.3.5.4 Right Turn on Red

This section provides guidance for right-turn-on-red (RTOR). The same guidance applies for left-turn-on-red but for simplicity, only RTOR scenarios are presented.

There have been inconsistencies by implementations on whether to use stop-Then-Proceed (2) or stop-And-Remain (3) for DE_MovementPhaseState in an SAE J2735 SPaT message for a right turn movement at signalized intersections where RTOR is allowed. There is a need that IOOs represent RTOR scenarios when a red ball signal indication is present in a nationally interoperable manner so vehicle applications can properly address RTOR scenarios. NTCIP 1202 v03B adds support for how RTOR in a connected vehicle environment should be handled in a Time-of-day scenario. In the future, NTCIP 1202 will support RTOR in a connected vehicle environment with preemption scenarios.

MUTCD contains the following for a CIRCULAR RED signal indication as follows:

> Except when a traffic control device is in place prohibiting a turn on red or a steady RED ARROW signal indication is displayed, vehicular traffic facing a steady CIRCULAR RED signal indication is permitted to enter the intersection to turn right, or to turn left from a one-way street into a one-way street, after stopping. The right to proceed with the turn shall be subject to the rules applicable after making a stop at a STOP sign.[1]

The application of DE_MovementPhaseState in SAE J2735 is unclear with respect to RTOR:

- stop-Then-Proceed (2),
  - Often called 'flashing red' in U.S.
  - Driver Action:
    - Stop vehicle at stop line.
    - Do not proceed unless it is safe.
      - Note that the right to proceed either right or left when it is safe may be contained in the lane description to handle what is called a 'right on red.'
- stop-And-Remain (3),
  - e.g., called 'red light' in U.S.
  - Driver Action:
    - Stop vehicle at stop line.
    - Do not proceed.
      - Note that the right to proceed either right or left when it is safe may be contained in the lane description to handle what is called a 'right on red.'

There are several assumptions in a connected vehicle environment for RTOR.

1. A vehicle application intending to make a right turn at the intersection would process the SPaT message and determine what the DE_MovementPhaseState is for the right turn and what enabled lanes are active.

[1] Manual on Uniform Traffic Control Devices (MUTCD), 2009, Section 4D.04.C.1

© 2023 AASHTO / ITE / NEMA 

2. A vehicle application intending to make a right turn at the intersection would process the MAP message and determine if the lane (that the vehicle is currently in) allows an RTOR movement.
3. A valid MAP message is broadcasted with a valid SPaT message at a connected intersection.

The following are the requirements for RTOR in a connected vehicle environment.

1. The MAP message for a connected intersection shall indicate if RTOR is permitted for a lane.
    a. If RTOR is permitted for the lane, both maneuverRightAllowed AND maneuverRightTurnOnRedAllowed bits are TRUE in DE_AllowedManeuvers for that lane and for that movement to indicate that right turn and RTOR are allowed.
    b. If RTOR is NOT permitted for the lane, the maneuverRightAllowed bit is TRUE but the maneuverRightTurnOnRedAllowed bit is FALSE in DE_AllowedManeuvers for that lane and for that movement to indicate RTOR is not allowed.
    c. If whether RTOR is permitted for a lane at the connected intersection varies, two revocable lanes shall be defined for the same physical lane in the MAP message—one revocable lane indicating RTOR is permitted, and one RTOR indicating RTOR is not permitted.
2. The SPaT message for a connected intersection shall indicate if RTOR is permitted for a lane.
    a. If RTOR is permitted for a lane, the SPaT message shall indicate stop-Then-Proceed for DE_MovementPhaseState for that right turn movement.
    b. If RTOR is not permitted for a lane, the SPaT message shall indicate stop-And-Remain for DE_MovementPhaseState for that right turn movement.
    c. If whether RTOR is permitted for a lane at the connected intersection varies, the SPaT message shall indicate which revocable lane, as defined in the MAP message, is enabled. Only the signal group associated with the right turn for that revocable lane, with a stop-Then-Proceed or stop-And-Remain state as appropriate for the current RTOR effective condition, is included in the SPaT message.
    d. The requirements above shall be fulfilled even if whether RTOR is permitted varies by time-of-day/day-of-week.

To fulfill Requirements 1, 1a, and 1b above, the MAP message shall be used to indicate that whether RTOR is permitted.

In Figure 13, RTOR is allowed in Lanes 6 and 8, RTOR is NOT allowed in Lane 2, and whether RTOR is allowed is dependent on the time-of-day in Lanes 4/14.

The SAE J2735 MAP message uses DE_AllowedManeuvers to indicate when an RTOR scenario exists. The individual bits in the bitstring of DE_AllowedManeuvers indicates what turns are allowed for each lane at an intersection. Using Figure 13 as a reference, Table 10 shows how the MAP message should be used to indicate that RTOR is allowed—Lane indicates the lane number, AllowedManeuvers indicates what maneuvers are allowed for that lane and for that movement, and Description is a textual description of the movement at the intersection.

Note that DE_AllowedManeuvers is provided for each lane and for each movement (lane connection) for the lane. For the lane DE_AllowedManeuvers lists all maneuvers that can be made at the stop line from that lane. For the connection, DE_AllowedManevuers only includes the maneuver allowed in that connection. The signalGroupID is associated with the connection.

Copy Per RTM Distribution Permission © 2023 AASHTO / ITE / NEMA

**Table 10 Example Lane Attributes**

| Lane | DE_AllowedManeuvers (MAP) | Description |
|---|---|---|
| 1 | bit (1) maneuverLeftAllowed | NB Protected Left |
| 2 | bit (0, 2) maneuverStraightAllowed, maneuverRightAllowed | SB Thru<br>SB Permissive Right<br>(RTOR Not Allowed) |
| 3 | bit (1) maneuverLeftAllowed | EB Protected Left |
| 4 | bit (0, 2, 5) maneuverStraightAllowed, maneuverRightAllowed, maneuverRightTurnOnRedAllowed | WB Thru<br>WB Permissive Right<br>(RTOR Allowed) |
| 5 | bit (1) maneuverLeftAllowed | SB Protected Left |
| 6 | bit (0, 2, 5) maneuverStraightAllowed, maneuverRightAllowed, maneuverRightTurnOnRedAllowed | EB Thru<br>EB Permissive Right<br>(RTOR Allowed) |
| 7 | bit (1) maneuverLeftAllowed | WB Protected Left |
| 8 | bit (0, 2, 5) maneuverStraightAllowed, maneuverRightAllowed, maneuverRightTurnOnRedAllowed | EB Thru<br>EB Permissive Right<br>(RTOR Allowed) |
| 14 | bit (0, 2) maneuverStraightAllowed, maneuverRightAllowed | WB Thru<br>WB Permissive Right<br>(RTOR Not Allowed) |

Both bits, maneuverRightAllowed AND maneuverRightTurnOnRedAllowed, are SET to TRUE for DE_AllowedManeuvers to show that both right turn and RTOR are allowed. maneuverRightAllowed is SET to TRUE and maneuverRightTurnOnRedAllowed is SET to FALSE when a right turn is allowed and RTOR is not allowed.

However, an intersection may allow RTOR only at specific times of the day and days of the week, such as for Lane 4 in Figure 13. In Figure 13, RTOR is not allowed in Lane 4 from 3:00 PM to 6:00 PM every day.

To address this situation, revocable lanes are defined in the MAP message so its contents do not have to be updated on a daily basis. Revocable lanes are not considered to be part of the current MAP unless they are in the DF_EnabledLaneList in the SPaT message.

In Figure 13, two revocable lanes are defined for each physical lane where RTOR is allowed, one with RTOR movement allowed (Lane 4), and the other lane with RTOR prohibited (Lane 14). DF_EnabledLaneList in the SPaT message indicates which lane, if any, is currently enabled (in effect). Only one revocable lane defined for each physical lane should be provided in DF_EnabledLaneList at any given time. Only the signalGroupIDs associated with currently active lanes should be broadcast.

All the lanes shown in Figure 13 are vehicle lanes and Table 11 shows the specific properties enabled for each lane. DE_LaneAttributes-Vehicle is used to indicate if the lane is revocable.

© 2023 AASHTO / ITE / NEMA Copy Per RTM Distribution Permission

**Table 11 Lanes with Revocable Indications**

| Lane | Description | DE_LaneAttributes-Vehicle |
|---|---|---|
| 1 | NB Protected Left | |
| 2 | SB Thru and SB Permissive Right | |
| 3 | EB Protected Left | |
| 4 | WB Thru and WB Permissive Right (RTOR Permitted) | isVehicleRevocableLane (0) |
| 5 | SB Protected Left | |
| 6 | NB Thru and NB Permissive Right | |
| 7 | WB Protected Left | |
| 8 | EB Thru and EB Permissive Right | |
| 14 | WB Thru and WB Permissive Right (RTOR Prohibited) | isVehicleRevocableLane (0) |

To fulfill requirement 2a, the SPaT message shall indicate stop-Then-Proceed for DE_MovementPhaseState when the signal indication for the right turn movement is a circular red ball.

The DE_MovementPhaseState is determined using the signalGroupEntryTable (see Figure 14) and the agencySignalStateTable (see Figure 15). Each signalGroupID for an intersection is assigned a unique signalGroupEntryNumber. The DE_MovementPhaseState (agencySignalStateValue) for that signalGroupID is defined by the current signal indication color (agencySignalStateColor), agencySignalStateControlType, signalGroupGreenType, signalGroupPermissiveControl Color, and signalGroupRedType in the agencySignalStateTable.

For example, for signalGroupID 15 in Figure 13 corresponds to signalGroupEntryNumber 15 in Figure 14 (this example has only 1 intersection). signalGroupID 15 only applies to the right turn movement of the northbound lane. The through movement is signalGroupID 6. signalGroupEntryNumber 15 has a signalGroupControlType of phaseVehicle, a signalGroupGreenType of permissive, and a signalGroupRedType of stopThenProceed. When the signal indication for signalGroupEntryNumber 15 is red, row ID 14 in Figure 15 is applicable so DE_MovementPhaseState is stop-Then-Proceed. At the same time, signalGroupID is 6 is used for the through movement from the same lane but has signalGroupRedType of stopAndRemain.

> Note: The signalGroupEntryNumber, NOT signalGroupID, is the index for the signalGroupEntryTable because a controller may support multiple intersections. The signalGroupEntryNumber uniquely identifies an intersectionID and a signalGroupID.

To fulfill requirement 2b, the SPaT message shall indicate stop-And-Remain for DE_MovementPhaseState when the signal indication for the right turn movement is a circular red ball.

To fulfill requirements 2c and 2d above, the SPaT message shall indicate which revocable lane, and by extension, which signalGroupID is in effect.

Referencing Figure 13, Table 12 indicates which revocable lanes are enabled during different times of the day. When RTOR is prohibited, Lane 14 in Figure 13 is included in enabled while lane 4 is omitted. When RTOR is permitted, Lane 4 is enabled while 14 is omitted.

**Table 12 Example Enabled Lanes by Time Of Day**

| Time | EnabledLaneList |
|---|---|
| 3:00 – 6:00 PM | 14 |
| All Other Times | 4 |

Copy Per RTM Distribution Permission © 2023 AASHTO / ITE / NEMA

At any point in time, either Lane 4 or 14 must be enabled and appear in the spatEnabledLanesStatus object. Lanes marked as revocable but not included in spatEnabledLanesStatus are not active.

The spatEnabledLanesConcurrencyTable contains the set of revocable lanes allowed to exist concurrently. Thus, no set of lanes in this table should contain Lanes 4 and 14 (i.e., these lanes MUST be exclusive). Table 13 shows how enabled lanes are stored in the NTCIP 1202 spatEnabledLanesConcurrencyTable.

**Table 13 Example spatEnabledLanesConcurrencyTable**

| enabledLaneIndex | enabledLaneConcurrency | enabledLaneIntersection |
|---|---|---|
| 1 | 4 | 1 |
| 2 | 14 | 1 |

Lanes can be enabled based on the schedule in the timeBaseDayPlanTable, which refers to the timebaseAscAction table using the OID of the timebaseAscNumber object (1.3.6.1.4.1.1206.4.2.1.5.3.1.1) in the day. Table 14 and Table 15 show how to use the schedule to enable/disable lanes for the intersection shown in Figure 13.

**Table 14 Example timeBaseDayPlanTable**

| dayPlanNumber | dayPlanEventNumber | dayPlanHour | dayPlanMinute | dayPlanActionNumberOID |
|---|---|---|---|---|
| 1 | 1 | 0 | 0 | 1.3.6.1.4.1.1206.4.2.1.5.3.1.1.1 |
| 1 | 2 | 15 | 0 | 1.3.6.1.4.1.1206.4.2.1.5.3.1.1.2 |
| 1 | 3 | 18 | 0 | 1.3.6.1.4.1.1206.4.2.1.5.3.1.1.1 |

**Table 15 Example timeBaseAscActionTable**

| timebaseAsc ActionNumber | timebaseAsc Pattern | TimebaseAsc AuxiliaryFunction | timebaseAsc SpecialFunction | timebaseAsc EnabledLane |
|---|---|---|---|---|
| 1 | 1 | 0 | 0 | 1 |
| 2 | 0 | 0 | 0 | 2 |

At midnight (dayPlanHour 0, dayPlanMinute 0 in Table 14), timebaseAscActionNumber 1 would be activated, which would activate patternNumber 1 in the patternTable and enabledLaneIndex 1 in the spatEnabledLanesConcurrencyTable, which would enable lane 4. At 3:00 PM, timebaseAscActionNumber 2 would be activated, which would activate enabledLaneIndex 2 in the spatEnabledLanesConcurrencyTable, which would enable lane 14 and revoke lane 4. Since the timebaseAscPattern value is 0, no pattern is specified and pattern 1 would continue cycling. At 6:00 PM, timebaseAscActionNumber 1 would be activated, which would reenable lane 4 and revoke lane 14.

> Note: NTCIP 1202 v03A included a patternSpatEnabledLanes object in the patternTable to associate revocable lanes with pattern. The patternSpatEnabledLanes object is deprecated in NTCIP 1202 v03B and replaced with the timebaseAscEnabledLane object referring to the spatEnabledLanesconcurrencyTable. This ensures that lanes can still be active as well as enabled or revoked if the controller is unable to run the specified pattern and falls into Free mode.

To fulfill requirement 2d above, the SPaT message shall indicate if RTOR is in effect. If RTOR is in effect, the SPaT message shall indicate stop-Then-Proceed for DE_MovementPhaseState when the signal indication for the right turn movement is a circular red ball. If RTOR is prohibited, the SPaT message shall indicate stop-And-Remain for DE_MovementPhaseState when the signal indication for the right turn movement is a circular red ball.

The signalGroupLane of the signalGroupEntryTable in Figure 14 defines which signalGroupEntryNumber should be used when a set of revocable lanes are enabled, as defined by enabledLaneConcurrency.

© 2023 AASHTO / ITE / NEMA Copy Per RTM Distribution Permission

For example, signalGroupEntryNumber 14 has a signalGroupID of 14 and a signalGroupLane of 1. This means signalGroupEntryNumber 14 is active when all lanes defined in enabledLaneConcurrency.1 is enabled. enabledLaneConcurrency.1 contains only lane 4 of intersection 1 (see Table 13). Since lane 4 permits RTOR, the signalGroupRedType is stop-And-Proceed. When the signal indication for signalGroupEntryNumber 14 is red, row ID 14 in Figure 15 is applicable, so DE_MovementPhaseState is stop-Then-Proceed.

On the other hand, signalGroupEntryNumber 17 (signalGroupID 24) is active when all lanes defined in enabledLaneConcurrency.2 is enabled. enabledLaneConcurrency.2 contains only lane 14 of intersection 1 (see Table 13). Since lane 14 prohibits RTOR, the signalGroupRedType is stopAndRemain. Thus when the signal indication for signalGroupEntryNumber 14 is red, row ID 15 in Figure 15 is applicable, so DE_MovementPhaseState is stop-And-Remain.

#### F.3.3.6 TimeChangeDetails

This section provides additional guidance to provide the TimeChangeDetails for each allowed movement at a signalized intersection.

DF_TimeChangeDetails is a sequence of data elements that is included in an SAE J2735 SPaT message. DF_TimeChangeDetails describes time points (TimeMark) when the current movement state for each signalGroupID may change to the next movement phase state. Only minEndTime is a required data element in an SAE J2735 SPaT message, but CTI 4501 also requires maxEndTime, startTime, and nextTime.

The controller uses the signalStateMinEndTick2, signalStateMaxEndTick2, signalStateNextTick2, and signalStateStartTick objects to provide the time points for each signalGroupID to the CV Roadside Process. CTI 4501 requires that the controller provide the time points for the current and the next interval. This is accomplished by the movementEventNumber, where movementEventNumber.1 represents the current interval and movementEventNumber.2 represents the next interval. See Sections 3.6.3.1 and 3.6.3.2 for the performance requirements to send signalState2 to the CV Roadside Process.

Portions of the following sections are reprinted from CTI 4501 *Connected Intersections (CI) Implementation Guide*.

##### F.3.3.6.1 Vendor-Specific Values

If the vendor can provide more accurate TimeChangeDetails when using the vendor-specific timing values (objects), the vendor is encouraged to do so.

##### F.3.3.6.2 signalStateMinEndTick2

This time mark defines the earliest point in time when the signal group may terminate its current indication as output by the traffic controller assuming current demand and operational conditions (preemption state, etc.). This time mark must take into consideration all active phase calls, preemption requests, coordination holds, or other demand inputs at the time of SPaT message generation, but does not need to provide the absolute minimum end time for demand inputs that have not yet been received. The signalStateMinEndTick2 should not be decreasing. The minimum end time shall be generated in accordance with the following rules:

For all numeric values:

TimeMark >= Current Time

For Green Indications of movements that are currently running in actuated mode:

TimeMark = Current Time
+ Minimum Green Timer Remaining for controlling phase (if any)
+ Gap (Passage) Timer Remaining if less than Minimum Green Timer

 © 2023 AASHTO / ITE / NEMA

+ Trailing Overlap Green Timer if signal group is currently being controller by an overlap that will time its trailing green based upon current demand.

For Green Indications of movements that are currently in a non-actuated mode:

TimeMark = Current Time
+ Maximum Green or Split Max Timer Remaining for controlling phase (if any)
+ Trailing Overlap Green Timer if signal group is currently being controller by an overlap that will time its trailing green based upon current demand.

For Green Indications of movements that are actively timing a pedestrian phase that must terminate with the controlling movement, the Time Mark established above must be adjusted based upon the pedestrian state.

TimeMark >= Current Time
+ Pedestrian Walk Time Remaining
+ Pedestrian Clearance Time Remaining
+ MUTCD 3 Second Ped Clearance (if applicable)
– Ped Clearance Through Yellow (if applicable)
– Ped Clearance Through Red (if applicable)

For Yellow Indications of movements:

TimeMark = Current Time
+ Yellow Timer for phase or overlap that is currently controlling the signal group.

For Red Indications of movements:

TimeMark = Current Time
+ Expected minimum duration of all movements that have active demand prior to service of the phase or overlap will next control this signal group.

A common situation that has been difficult to characterize with SPaT is the case of a phase resting in green awaiting service on conflicting movements. The time mark for this case can either reflect a minimum time to change of 0.1 second or 0.0 seconds, a likely time that is very indeterminate, and a maximum time that can be for even hours in late night operation. It is recommended that 0.1 second be used as the minimum time to change, rather than 0.0. 0.0 should be reserved for the case where green termination was commanded, and the field outputs change is imminent. A vehicle resting in green may display 0.1 second for an indefinite period with increased value to match the active passage timer if/when additional vehicle actuations on the movement reset the passage timer.

In cases of an active Preemption, the aforementioned intervals may be programmed to run override values. The generation methods above shall remain valid; however, the traffic controller must substitute the preemptively overridden timing values upon controller activation of the preemptive timing (may occur before or after preemption input delay interval).

#### F.3.3.6.3 signalStateMaxEndTick2

This time mark defines the absolute latest point in time when the signal group may terminate its current indication as output by the traffic controller. This time mark must take into consideration all active phase calls, coordination force-offs, preemption requests, or other demand inputs at the time of SPaT message generation, but does not need to provide the absolute maximum end time for demand inputs that have not yet been received or consider the possibility of the removal of an actively received demand inputs.

This time mark should not be increasing (extending further into the future (incrementing)) because then it really wasn't a Maximum. However, the time mark is allowed to change from a value of Unknown to an integer to allow a vehicle to go through the intersection, and then change back to a value of Unknown.

The maximum end time shall be generated in accordance with the following rules.

© 2023 AASHTO / ITE / NEMA Copy Per RTM Distribution Permission

For Green Indications of movements that are currently running in actuated mode with a call on a conflicting phase:

TimeMark = Current Time
+ Maximum Green or Maximum Split Timer remaining for controlling phase (whichever is greater, if either apply)
+ Added Extension Timer Remaining (if this feature is enabled and current demand will require added extension)
+ Trailing Overlap Green Timer if signal group is currently being controller by an overlap that will time its trailing green based upon current demand.
+ any dynamic max green additions

Note: Maximum Split Timer is defined as the time to phase force off if running under a coordinated or preempted mode.

Note: In cases where no conflicting demand is present, this Time Mark will be set to the value for unknown.

For Green Indications of movements that are currently in a non-actuated mode:

TimeMark = Current Time
+ Maximum Green or Split Max Timer Remaining for controlling phase (if any)
+ Trailing Overlap Green Timer if signal group is currently being controller by an overlap that will time its trailing green based upon current demand.

For Green Indications of movements that are actively timing a pedestrian phase that must terminate with the controlling movement, the Time Mark established above must be adjusted based upon the pedestrian state.

TimeMark >= Current Time
+ Pedestrian Walk Time Remaining
+ Pedestrian Clearance Time Remaining
+ MUTCD 3 Second Ped Clearance (if applicable)
– Ped Clearance Through Yellow (if applicable)
– Ped Clearance Through Red (if applicable)

For Yellow Indications of movements:

TimeMark = Current Time
+ Yellow Timer for phase or overlap that is currently controlling the signal group.

For Red Indications of movements:

TimeMark = Current Time
+ Expected maximum duration of all movements that have active demand prior to service of the phase or overlap will next control this signal group.

For non-actuated mode (fixed time operations) or when the interval duration of the current movement state is deterministic (e.g., max recall, yellow interval duration):

Time Mark for the maxEndTime = Time Mark for the minEndTime

#### F.3.3.6.4 signalStateLikelyEndTick2

This time mark defines the most likely point in time when the signal group will terminate its current indication as output by the traffic controller. This time mark has already been applied in practice along with the associated TimeIntervalConfidence for green indications. The confidence factor requires a cycle-by-cycle and/or historic statistical analysis of signal timing that is beyond the capabilities of NTCIP 1202 v03A standard traffic controllers. Rather than undermine the existent deployments of this data field, this time mark was left as an optional field in NTCIP 1202 v03B. This field can be utilized by external systems that are performing a statistical analysis of signal timing.

Copy Per RTM Distribution Permission © 2023 AASHTO / ITE / NEMA

The predictive nature of signal timing is expected to be characterized and bounded using the minEndTime and maxEndTime for all indications (R, Y, G). A mean value for green duration is not available unless the traffic controller has capability to generate this likely time and interval confidence. In cases where the green duration is deterministic (fixed time, max recall, etc.), the minEndTime will equal the maxEndTime, revealing this level of certainty to the end user.

#### F.3.3.6.5 signalStateTickConfidence2

The likelyTimeConfidence is defined as the statistical confidence that the reported likely end time point of the current movement (e.g., at the end of a protected green or end of a permissive clearance time) at an intersection is accurate. The confidence value is measured as a probability class, as defined by DE_TimeIntervalConfidence in SAE J2735. However, at this time, there is no defined method or formula by this standard or SAE J2735 to determine the statistical confidence. Until a standard method or formula to calculate likelyTimeConfidence is defined, signalStateTickConfidence is unused and should be SET to 0.

#### F.3.3.6.6 signalNextTick2

This time mark defines the point in time when the movement phase state is NEXT allowed to proceed AFTER a clearance interval. The movement phase state is next allowed to proceed when DE_MovementPhaseState is equal to permissive-Movement-Allowed or protected-Movement-Allowed. The movement phase state is considered to be in a clearance interval if DE_MovementPhaseState is equal to stop-Then-Proceed, stop-And-Remain, permissive-Clearance, protected-Clearance, or caution-Conflicting-Traffic.

This is a best predicted value based upon awareness of the intersection. Full demand of all phases can be assumed unless the traffic controller is capable of monitoring current phase usage and can more accurately estimate future split/phase utilization. This value should include the time to service full demand for all phases that precede the next beginning of green service of the current signal group.

If the movement is currently in a flashing yellow arrow state, and the next movement state is a protected green arrow, the nextTime is NOT the time mark when the movement state being the protected green arrow. The nextTime is the time mark when the movement state is next permissive-Movement-Allowed or protected-Movement-Allowed AFTER the clearance interval.

In **coordinated operation**, this value establishes the time mark for the next service of a protected-permissive movement based upon the continued in-step coordinated operation and timing commensurate to the regular permissive/split window of the phase. In cases of coordinated transition or transit signal priority, accuracy can be improved if the split adjustment methodologies are factored into this value computation. This improvement is desirable, but not mandatory for the traffic control to apply.

In **free operation**, this value establishes the time mark for the next service of a protected-permissive movement based upon current intersection demand. If the traffic controller can apply data for recent average green timing of each phase (split monitor), it will improve this estimate. However, at a minimum, the traffic controller generates this value assuming minimum green timing of all active calls to preceding phases and assuming pedestrian service for all actively registered pedestrian demand.

#### F.3.3.6.7 signalStateStartTick

This time mark defines the point in time when the next interval (after the current interval) will begin for the same signal group. To avoid ambiguity in the meaning of the time mark, the time mark is always considered to be a time in the future. Therefore, time mark cannot be used for intervals that have already begun timing.

This time mark will be a numeric value only if the start time of the next movement phase state immediately after the current movement phase state is known.

© 2023 AASHTO / ITE / NEMA Copy Per RTM Distribution Permission

If the start time is unknown, a value of unknown is used.

If the next movement phase state is unknown, a value of unknown for the start time will be used.

#### F.3.3.6.8 Special Traffic Control Situations

The following guidance is reprinted from CTI 4501 and is offered to resolve any ambiguity and ensure SPaT messaging can be supported in these situations.

There is a common case here when a flashing yellow arrow (permissive left) will revert directly to a protected left green arrow. These time change details may lead roadway users to assume these time marks are the time when change will occur from a protected or permissive movement into a restricted movement and not realize this change can occur between protected and permissive movements. The TimeChange detail shall indicate the following:

> nextTime = likelyTime for cases when the movement will shift between protected and permissive movements, without a clearance interval present.
>
> nextTime = likelyTime + Clearance Interval for cases when the movement will shift between protected and permissive movements, with an interim clearance interval present.

### F.3.3.7 Enabled Lanes

Revocable lanes are defined in SAE J2735 to define the different uses of a physical lane that may vary by time-of-day or during special events. For example, an agency may define a revocable lane each for when a physical lane can be used for travel in a direction, not allowed for travel (e.g., a parking lane), or for travel in the opposite direction. The MAP data message describes the attributes for each lane defined for an intersection, including if a lane is a revocable lane.

When a revocable lane is "asserted" or in use, it is called an enabled lane. The spatEnabledLanesStatus object definition indicates what lanes are currently enabled.

NTCIP 1202 v03B provides two methods to enable revocable lanes. Lanes can also be enabled using an entry in the timebaseAscActionTable. A new object definition, timebaseAscEnabledLane, was added to the timebaseAscActionTable to indicate what set of revocable lanes are enabled, by pointing to entries in the spatEnabledLanesConcurrencyTable2. Each entry in the spatEnabledLanesConcurrencyTable2 defines the set of revocable lanes to be concurrently enabled.

The spatEnabledLanesCommand2 object allows a management station to set which revocable lanes are enabled. This object overrides any enabled lanes established in the timebaseAscActionTable. An octet value of "0xFF" will cancel this command and revert back to the values currently in effect in the timebaseAscActionTable.

In scenarios where a controller generates SPaT data for more than one signalized intersection, the same lane identifier should be assigned to a revocable lane for all signalized intersections that the controller provides SPaT data for. With support for up to 255 lanes per controller, a lane identifier used by all signalized intersections managed by a controller should be possible. NTCIP 1202 does not support using different lane identifiers at signalized intersections for a revocable lane.

For example, in Figure 17, the revocable lane between signalized intersection A and signalized intersection B is assigned the same lane identifier—lane identifier 9 when vehicular traffic is moving westbound (from intersection B to intersection A), and lane identifier 109 when vehicular traffic is moving eastbound (from intersection A to intersection B). In this example, lane 9 is an ingress lane into and lane 109 is an egress lane out of intersection A. Conversely, lane 109 is an ingress lane into and lane 9 is an

Copy Per RTM Distribution Permission © 2023 AASHTO / ITE / NEMA

egress lane out of intersection B. Lane identifiers 9 and 109 should not be assigned to any other lane for any signalized intersection managed by the controller.

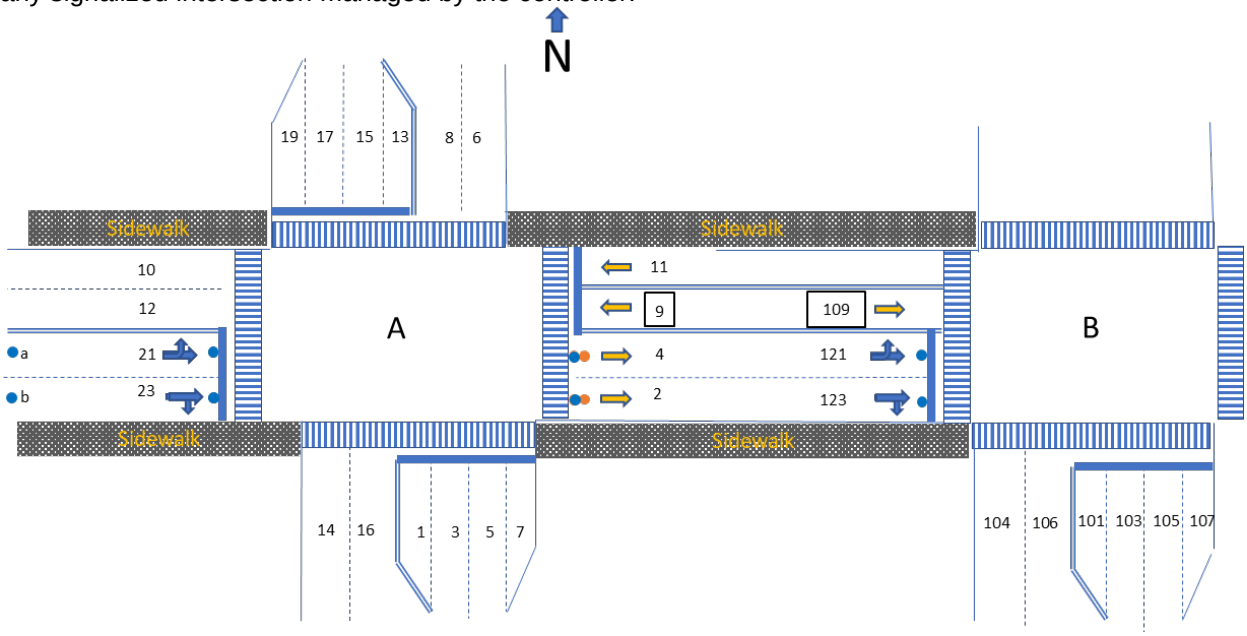


**Figure 17 Enabled Lanes Example**

### F.3.3.8 Advisory Speeds

The advisorySpeedTable2 contains advisory speeds for an approach into the intersection. For a specified signalGroupEntryNumber, each row contains an advisory speed type (as defined by DE_AdvisorySpeedType in SAE J2735), the advisory speed, the distance from and to the stop bar that the advisory speed is applicable for, and if applicable, the specific class of user defined for the intersection. Providing advisory speeds in a SPaT message is optional.

### F.3.3.9 Movement Maneuvers

The movementManeuverTable2 provides additional information that may assist a traveler wishing to perform a specific maneuver at the intersection. SAE J2735 allows a controller to provide movement data for up to 16 movement maneuvers (e.g., northbound left turn, southbound left turn) for a signalGroupID. For a specified signalGroupEntryNumber, each row contains a lane connection identifier (which defines the lane to lane connection in the corresponding MAP message); the existing queue length, in meters, that has been detected for that connection; and a bit that indicates if any pedestrians or bicyclists are detected that conflict with the desired maneuver. Each row also identifies the detector number input(s), in the form of octet strings, that provide the information to determine the queue length, and the potential presence of pedestrians and bicyclists. An octet of 00 indicates no additional detectors in the octet string.

SAE J2735 also supports a data element to provide the distance from the stop bar within which travelers have a high probability of successfully executing the desired movement before the movement ends (e.g., before the phase starts the clearance interval); however, the ASC WG decided not to support that data element at this time, because current traffic controllers are unable to calculate that information.

The movementManeuverId2 object, when set to 0, indicates that row in the movementManeuverTable2 does not contain any valid information (i.e., that row is disabled).

© 2023 AASHTO / ITE / NEMA

#### F.3.3.10 Implementation

NTCIP 1202 v03 allows an ASC to provide the information needed to generate a SPaT message. A bit in the spatOptions object is used to enable the ASC to generate and exchange SPaT data. Once the SPaT data is generated, a SNMP manager, such as a management station at a traffic management center, can retrieve that SPaT data.

A management station can enable communications with the CV Roadside Process using the rsuPortTable. The rsuPortTable contains the configuration and status information for the logical ports used by an ASC to communicate with RSUs. The rsuPortTable uses the logicalNameTranslationTable to identify the IP address of the RSU. A polling period and a watchdog timer to measure inactivity can be configured for each rsuPortEntry.

The spatPortTable establishes which RSU ports the ASC Process should provide SPaT data to, and the status of that provision of SPaT data. The spatPortTable is indexed by the rsuPortIndex used for the rsuPortTable. Each row in the spatPortTable contains a bit in the spatPortOptions object to enable the exchange of SPaT data with that logical RSU port, a bit to indicate if the SPaT data provided (assuming SPaT is enabled) is valid or invalid, and a bit to indicate if the MAP message is valid or invalid. Although the MAP message is broadcasted by the RSU, field maintenance personnel are more to likely have easier access to the traffic controller than the RSU. Since field maintenance personnel are likely to mark the SPaT data invalid during testing or temporary field work, the capability to indicate if the MAP message is valid or invalid is added to the traffic controller since the bit to indicate an invalid MAP message is in the SPaT message (which represents dynamic data, and specifically in the DE_IntersectionStatus object) and so the field maintenance personnel will not need access to the RSU also.

spatPortStatus indicates the status of the SPaT data exchange for that logical RSU port. The spatPortStatus is disabled (2) if Bit 0 of spatPortOptions for the same row is FALSE. spatPortStatus is enabledLanesError (5) if the value of the patternSpatEnabledLanes object does not match one of the entries in spatEnabledLanesConcurrencyTable.

The ASC also has a spatTimestamp object to indicate the time when the SPaT data was last updated by the ASC. Note that the time for this object uses the ASC's local time. However, the SPaT message broadcast by the CV Roadside Process uses UTC time. It is expected that the CV Roadside Process will make any time adjustments necessary before the SPaT message is broadcast.

#### F.3.3.11 Connected Device Detectors [Deprecated]

> Note: This section on Connected Vehicle Detectors and the next section on Connected Vehicle Data, and the object definitions, were written for NTCIP 1202 v03. NTCIP 1202 v03 was developed and published before NTCIP 1218, Object Definitions for Roadside Units (RSUs) was developed and published. Since the detection of the presence of travelers via "connected vehicle" will be determined by the RSU, users should refer to NTCIP 1218 for user needs, requirements, and object definitions for a "connected vehicle" detector. However, there may still be needs and requirements for the ASC to use the detection actuation information from the RSUs so this section and the object definitions are retained for informational purposes until the needs and requirements are developed in a future version of NTCIP 1202.

BSMs and PSMs broadcast by connected devices can provide a rich source of information about travelers around an ASC. Connected vehicles broadcasting BSMs and connected devices on travelers broadcasting PSMs can supplement, or replace, detectors around the ASC. RSUs at an intersection can receive BSMs and PSMs 360 degrees around the RSU, as long as the connected devices is within the receiving range of the RSU, nominally assumed to be 300 meters.

NTCIP 1202 v02 already allows vehicle and pedestrian detectors to be defined as inputs for signal operations and for data collection. NTCIP 1202 v03 extends that capability to connected vehicles by allowing a user to define detection zones for BSMs and PSMs, called a connected device detector. If the

Copy Per RTM Distribution Permission © 2023 AASHTO / ITE / NEMA

CV Roadside Process detects a BSM or PSM within the detection zone, NTCIP 1202 v03 can use the data from the BSM or PSM as an input. NTCIP 1202 v03 also allows filters to be configured for each connected device detector so only BSMs and PSMs that satisfy the user defined criteria.

To support connected device detectors, the cvDetectorTable and detectionZoneNodePointTable were added to allow NTCIP 1202 v03 to use the BSMs and PSMs as inputs to the ASC.

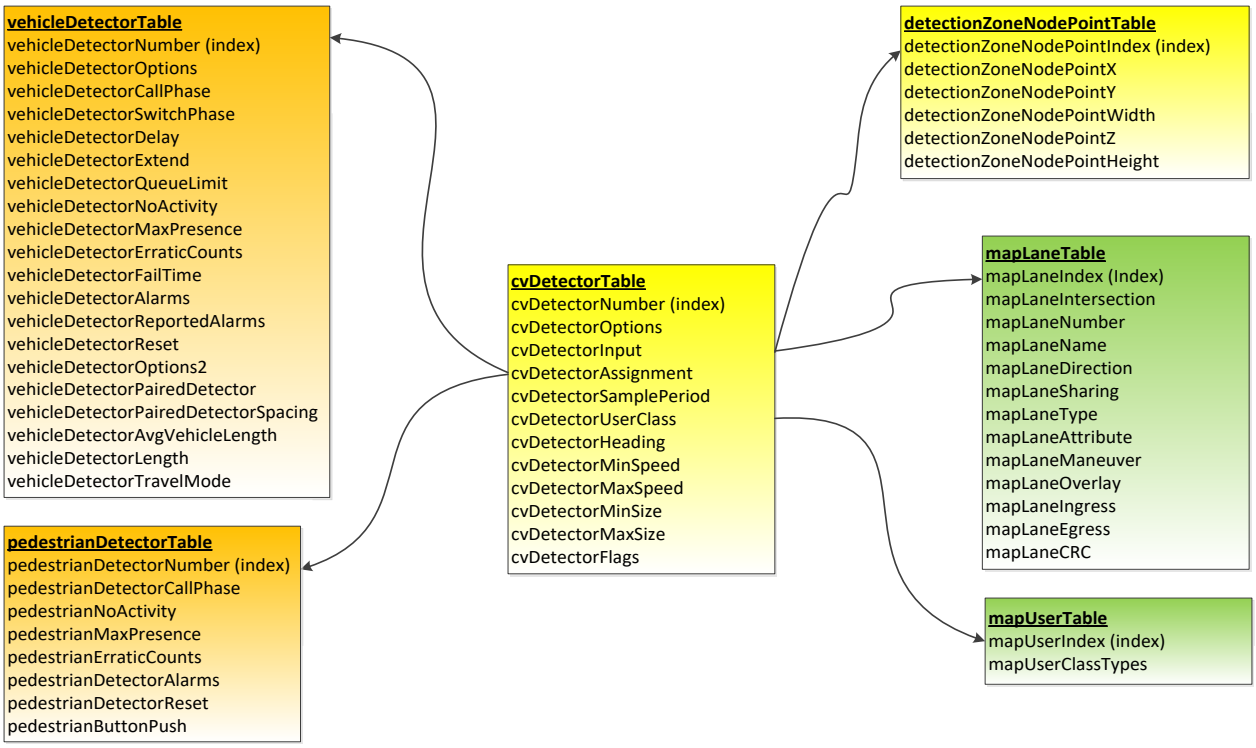


**Figure 18 Connected Data Detectors Mapping**

The cvDetectorTable defines the connected device detection zones, that is, the detection zones based on BSM and PSM transmissions from connected devices. This table assigns each connected device detection zone to either the mapLaneIndex in the mapLaneTable or to a detectionZoneNodePointIndex in the detectionZoneNodePointTable. Assigning the detection zone to the mapLaneIndex allows the CV Roadside Process to exchange actuation data or detection reports, for that lane with the ASC. The detectionZoneNodePointTable defines a series of node points that form a sequence of X-Y-Z offsets values, like defining a lane, and including the width and the elevation. The first node point is offset from the intersection's (cvDetectorIntersection) reference point, while all subsequent node points are offset values from the previous node point.

If no mapLaneIndex or detectionZoneNodePointIndex is assigned (i.e., cvDetectorInput = 00 for that connected device detection zone), then that connected device detection zone will process any BSM or PSM received by the CV Roadside Process, regardless of the geographic location of the connected device. Figure 18 depicts the relationship between these tables. The detector tables in NTCIP 1202 v03 and found on the ASC are in orange, MAP related tables are in green, and tables specific to the collection of connected vehicles data are in yellow.

Each connected device detector can also be assigned to one or more detector inputs on the ASC. This assignment allows the assigned detector input(s) to use the connected device data from that connected device detector for signal operations or for data collection. It also allows the connected device detector to adopt the parameters and settings for that detector input, such as its status, alarms, and options. The detector input is a detector number in either the vehicleDetectorTable, or pedestrianDetectorTable. Note

© 2023 AASHTO / ITE / NEMA Copy Per RTM Distribution Permission

that while a connected device detector may be assigned to more than one detector input, the detector inputs have to be of the same type (i.e., a vehicle type should be input to a vehicle detector).

The cvDetectorTable also defines the criteria to filter BSMs or PSMs within the detection zone to be used as actuations or for data collection. Only BSMs or PSMs that satisfy all the criteria are processed by the CV Roadside Process and are exchanged with the ASC Process. Filters supported in cvDetectorTable are:

a) cvDetectorUserClass.

   Note: currently, the BSMs currently do not broadcast vehicle type according to SAE J2945/1. PSMs does include a DE_PersonalDeviceUserType to describe the type of non-vehicular traveler, however the relevant user class restrictions are defined by DE_RestrictionAppliesTo limited to equippedBicycle, pedestrians, slowMovingPersons, wheelchairUsers, visualDisabilities, audioDisabilities, and otherUnknownDisabilities.

b) cvDetectorHeading. The direction of travel.
c) cvDetectorMinSpeed and cvDetectorMaxSpeed. The speed of the connected device.
d) cvDetectorMinSize and cvDetectorMaxSize. The size of the connected vehicle.
e) cvDetectorFlags. The status of one or more event flags or the brake status of the connected vehicle. Note this is a OR flag, not an AND flag, if more than one flag or brake status is selected.

#### F.3.3.12 Connected Device Data

Note: The previous section on Connected Vehicle Detectors and this section on Connected Vehicle Data, and the object definitions, were written for NTCIP 1202 v03. NTCIP 1202 v03 was developed and published before NTCIP 1218 *Object Definitions for Roadside Units (RSUs)* was developed and published. Since the detection of the presence of travelers via "connected vehicle" will be determined by the RSU, users should refer to NTCIP 1218 for user needs, requirements, and object definitions for a "connected vehicle" detector. However, there may still be needs and requirements for the ASC to use the detection actuation information from the RSUs, so this section and the object definitions are retained for informational purposes until the needs and requirements are developed in a future version of NTCIP 1202.

There are different methods that a CV Roadside Process can provide the ASC with the data collected from the BSMs and PSMs within the connected device detection zones (detectors). One simple method is to place a call on the appropriate detector input on the backplane, on the appropriate serial port, or via the ASC's Application Programming Interface (API). Each of these methods are outside the scope of NTCIP 1202 v03.

NTCIP 1202 v03 supports two formats for exchanging BSM and PSM data collected in the connected device detection zones with an ASC:

a) **Actuations**: Actuation data is exchanged across the ASC Process–CV Roadside Process when the only input needed by the ASC is if the presence of a traveler (vehicle, pedestrian, or bicyclist) is detected within the detection zone. This may be a vehicle on the side street, or a pedestrian wishing to cross the street.
b) **Processed Data**: Processed data is used when the processing of the BSMs and PSMs is performed by the CV Roadside Process. The results of the processing may then be exchanged across the ASC Process–CV Roadside Process as inputs to the ASC for its signal timing operations.

The two different formats are not mutually exclusive; that is, both formats can be exchanged across the ASC Process and the CV Roadside Process interface. The formats are enabled in cvDetectorOptions for each connected device detector in cvDetectorTable.

Copy Per RTM Distribution Permission © 2023 AASHTO / ITE / NEMA

#### F.3.3.12.1 Actuations

The cvDetectionGroupActuation in the cvDetectionGroupTable provides actuation data for connected devices detected within a connected device detection zone and satisfies the criteria established for that connected device detector in the cvDetectorTable (e.g., heading, speed). Each row in the cvDetectionGroupTable represents a set of 8 connected device detectors. The cvDetectionActuationSamplePeriod defines the frequency the cvDetectionGroupActuations is exchanged between the CV Roadside Process and the ASC Process. An implementation that supports NTCIP 1103-based traps can configure a trap so this cvDetectionGroupActuation object is transmitted on change (assuming the CV Roadside Process is the SNMP agent and the ASC Process is the SNMP manager).

#### F.3.3.12.2 Processed Data

The detectionReportTable reports the data processed by the CV Roadside Process. This data may be used by an ASC for signal operations or by a management station for archival purposes. Each row in the detectionReportTable represents a snapshot of the status of connected devices within the connected vehicle detection zone. Data in each snapshot may include the number of connected devices in the detection zone, the average speed of the connected devices, the average travel time through the detection zone, the average queue (as a number of vehicles), the average gap between connected vehicles, and the number of connected vehicles in a platoon.

As the connected device data is received and processed by the CV Roadside Process, each detection report is stored in the detectionReportTable. A sequence counter is maintained to track every time a detection report is successfully stored in a row. The frequency of how often a detection report is generated and exchanged is defined in cvDetectorSamplePeriod in the cvDetectorTable.

© 2023 AASHTO / ITE / NEMA Copy Per RTM Distribution Permission

# Annex G
# SNMP Interface [Normative]

The ASC shall conform to the requirements for the Simple Network Management Protocol (SNMP) as defined in NTCIP 1103 v03. Annexes G.1 through G.4 provide a description of the key services offered by SNMP assuming no errors. Precise rules and procedures are defined in NTCIP 1103 v02. Annex G.5 extends the requirements of NTCIP 1103 v03 by providing additional requirements that supplement, but do not replace, any requirements of NTCIP 1103 v03.

## G.1 Generic SNMP Get Interface

SNMP defines a generic process by which a management station can retrieve data from a device. This process consists of a Get request (GET) and a GetResponse as depicted in Figure 19. Both the Get request and the GetResponse messages contain a list of objects as defined by the varBindingList structure (see Annex G.4).

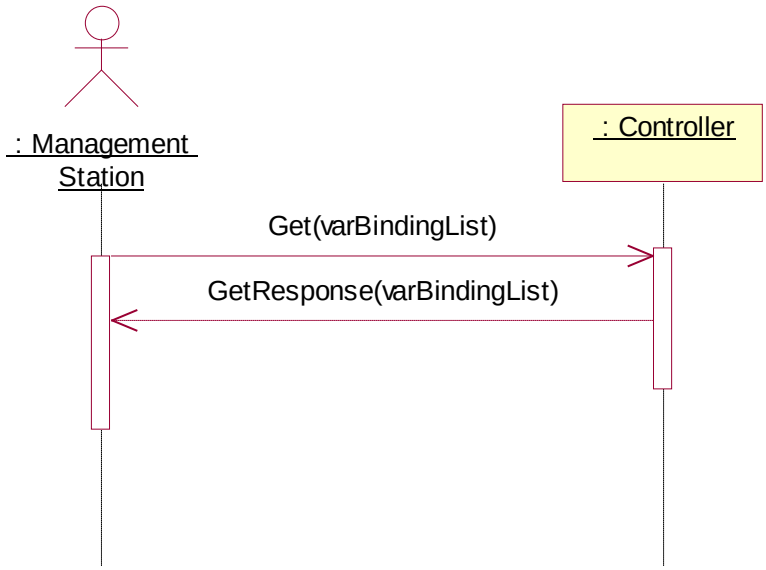


**Figure 19 SNMP Get Interface**

This generic process is customized by subsequent sections of NTCIP 1202 v03, by referencing the 'GET' operation, and directly by the RTM, by section number, to fulfill a wide range of the requirements defined in Section 3.

## G.2 Generic SNMP Get-Next Interface

SNMP defines a process by which a management station can explore data within a device to fulfill the requirement as defined in Section 3. This process consists of a GetNext request and a GetResponse as depicted in Figure 20. Both the GetNext request and the GetResponse messages contain a list of objects as defined by the varBindingList structure (see Annex G.4).


© 2023 AASHTO / ITE / NEMA

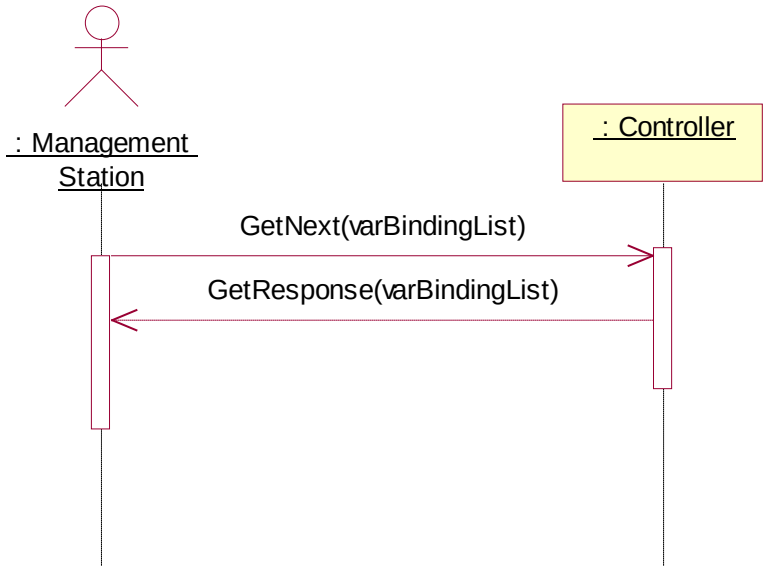


**Figure 20 SNMP GetNext Interface**

## G.3 Generic SNMP Set Interface

SNMP defines a generic process by which a management station can send data to a device. This process consists of a Set request and a GetResponse (sic—see note below) as depicted in Figure 21. Both the Set request and the GetResponse messages contain a list of objects as defined by the varBindingList structure (see Annex G.4).

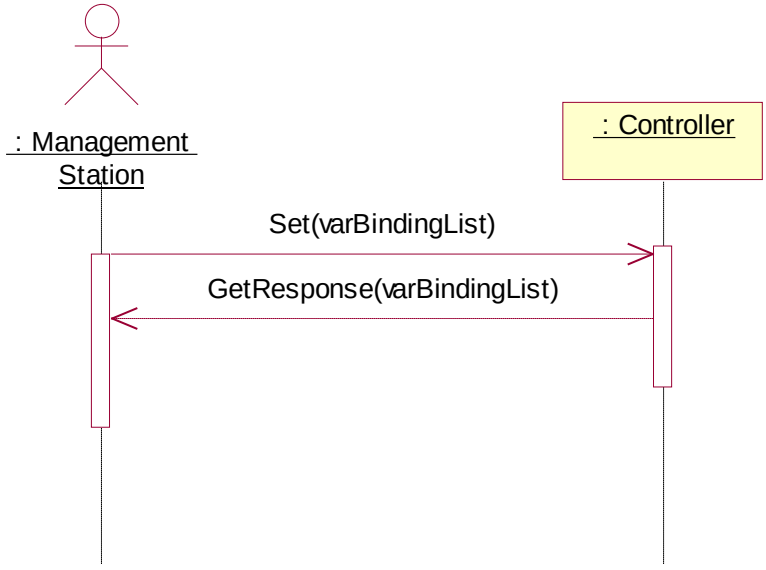


**Figure 21 SNMP Set Interface**

Note: The response message issued to an SNMP Set request is the same message structure as used to respond to an SNMP Get request. The SNMP standard calls this response message a GetResponse, but it is in fact a response to either a GET or a SET.

© 2023 AASHTO / ITE / NEMA

This generic process is customized by subsequent sections of this standard, by referencing the 'SET' operation, and directly by the RTM, by section number, to fulfill a wide range of the requirements defined in Section 3. Additional rules for SETs are defined by the Control Mode State Machine.

## G.4 Variable Binding List Structure

The requests and responses for the Get, Get Next, and Set operations all use the varBindingList structure. NTCIP 1103 v03 defines this structure as containing zero or more varBindings, where each varBinding is defined to consist of an object name (as indicated by an Object Identifier (OID)) and the associated object value. This relationship is depicted in Figure 22.

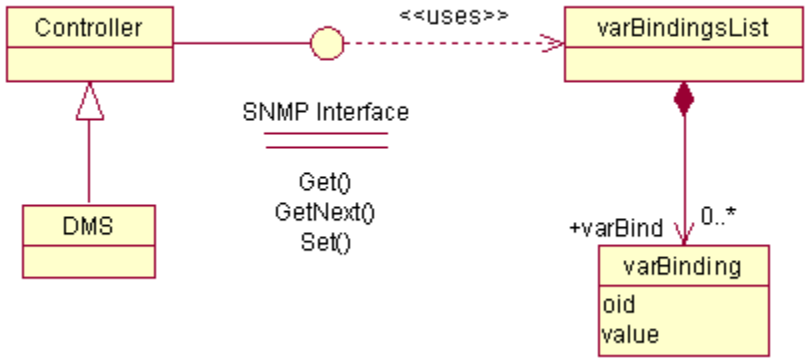


**Figure 22 SNMP Interface—View of Participating Classes**

## G.5 Additional Requirements

### G.5.1 Grouping of Objects in a Request

The ASC shall allow the management station to perform a single Get, GetNext, or Set operation on any combination of supported objects with the objects listed in any order within the message, unless otherwise restricted by NTCIP 1202 v03.

The ASC shall not associate any semantics to the ordering of objects within the varBindingsList. As required by RFC 1157 Section 4.1.5, each object shall be affected “as if simultaneously set with respect to all other assignments specified in the same message.”

### G.5.2 Support of Get

The ASC shall allow the management station to perform the Get operation on any supported object for which support for the Get Operation is indicated in Annex G.4.

### G.5.3 Support of Get-Next

The ASC shall allow the management station to perform the GetNext operation on any OBJECT IDENTIFIER.

### G.5.4 Support of Set

The ASC shall allow the management station to perform the Set operation on any supported object for which support for the Set Operation is indicated in Annex G.4.

Copy Per RTM Distribution Permission © 2023 AASHTO / ITE / NEMA

### G.5.5 Performance

The ASC shall process the Get, GetNext, or Set request in accordance with all of the rules of NTCIP 1103 v03, including updating the value in the database and initiating the transmission of the appropriate response (assuming that the ASC has permission to transmit) within 1 second of receiving the last byte of the request.

> Note: If a user desires a shorter response time, the user needs to specify this in the agency procurement specification.

### G.5.6 Properly Defined Objects

Every supported object shall be defined in a manner that conforms to RFC 1212 and shall have a unique OBJECT IDENTIFIER properly registered under the ISO Naming Tree. If the definition of the supported object is controlled by parties within the ITS community, the object definition should also conform to NTCIP 8004 v02.

© 2023 AASHTO / ITE / NEMA Copy Per RTM Distribution Permission

# Annex H
# NTCIP 1201 v03- and NTCIP 1103 v03-Derived Functional Requirements and Dialogs [Normative]

Annex H serves as a reference for NTCIP 1202 v03. Eventually this reference information may be moved to successors of NTCIP 1201 v03 and NTCIP 1103 v03.

> Note: At the time, the ASC WG needed to reference certain information from NTCIP 1103 (Transportation Management Protocols) and NTCIP 1201 (Global Object Definitions), such as the functional requirements and dialogs. However, neither NTCIP 1103 or NTCIP 1201 contained this type of information to the extent necessary. The ASC WG, with support from the responsible NTCIP WG and from NEMA, developed and provided the following temporary references in NTCIP 1202 v03 Annex H. When NTCIP 1103 and NTCIP 1201 support the information, then NTCIP 1202 v03 Annex H is slated for removal.

## H.1 Generic Functional Requirements

The following functional requirements address features defined in NTCIP 1201 v03.

### H.1.1 Generic Configuration Requirements

Requirements for configuring a device controller follow.

#### H.1.1.1 Determine Device Component Information

Upon request from a management station, the ASC shall return the identification information for each module contained in the device including:

a) An indication of the type of ASC
b) The manufacturer of the module
c) The model number or firmware reference of the module
d) The version of the module
e) An indication of whether it is a software or hardware module

#### H.1.1.2 Determine Device Configuration Identifier Requirements

The requirements to create ASC-specific configuration identifier information for configuration parameters defined within the ASC database follow.

##### H.1.1.2.1 Determine Unique Deployment Configuration Identifier

Upon request from a management station, the ASC shall return the identifier created using a checksum-creation-like approach across all configuration parameters contained in the ASC database, which the ASC creates across all configuration parameter values at powerup and updates whenever changes are made to any of the configuration parameters.

> Note: While the order of the configuration parameters within the ASC database to create the unique configuration identifier is not important, the number and actual configuration parameters to be used to create the identifier are essential to determine whether any, but not which, changes to the configuration parameters contained within the ASC database have been made.

Copy Per RTM Distribution Permission © 2023 AASHTO / ITE / NEMA

#### H.1.1.2.2 Determine Configuration Identifier Parameter Content

Upon request from a management station, the ASC shall return the configuration parameters being used to create configuration parameter identifiers by listing all configuration parameters based on their SNMP Object Identifiers (Object OIDs), including scalar and instance indicators and starting with configuration parameter OIDs defined in the NTCIP standards and followed by any manufacturer-specific configuration parameter OIDs.

### H.1.1.3 Determine Supported Standards

Upon request from a management station, the ASC shall return the NTCIP standards that it supports.

### H.1.1.4 Manage Unique System Name

Upon request from a management station, the ASC shall store the system name and location of the ASC. This unique system name could be any unique number such as a serial number or another unique number.

### H.1.1.5 Manage Time

Requirements for managing the controller's clock follow.

#### H.1.1.5.1 Configure Time

Upon request from a management station, the ASC shall store the coordinated universal time to the nearest second.

#### H.1.1.5.2 Configure Time Zone

Upon request from a management station, the ASC shall store the time zone in which the ASC is located.

#### H.1.1.5.3 Configure Daylight Saving Mode

Upon request from a management station, the ASC shall store whether or not daylight saving time adjustments should be performed when determining local time.

#### H.1.1.5.4 Determine Time Setting

Upon request from a management station, the ASC shall return the coordinated universal time settings, to the nearest second.

#### H.1.1.5.5 Determine Time Zone Setting

Upon request from a management station, the ASC shall return the time zone setting defined within the ASC.

#### H.1.1.5.6 Determine Daylight Saving Mode Setting

Upon request from a management station, the ASC shall return the daylight saving time setting (whether or not adjustments should be performed when determining the local time).

#### H.1.1.5.7 Monitor Current Time

Upon request from a management station, the ASC shall return the current time as set within the controller.

© 2023 AASHTO / ITE / NEMA Copy Per RTM Distribution Permission

#### H.1.1.6 Managing Auxiliary Ports Requirements

Requirements for managing the auxiliary input and output ports follow.

##### H.1.1.6.1 Determine External Port Information

Upon request from a management station, the ASC shall return the number of auxiliary ports and the following information for each port:

a) an indication of whether the port is analog or digital
b) a description of the port
c) an indication of the port resolution
d) an indication of whether the port can be used for input, output, or both

##### H.1.1.6.2 Configure Port Information

Upon request from a management station, the ASC shall store the indicated description for the indicated auxiliary port.

##### H.1.1.6.3 Required Number of Auxiliary Ports

Upon request from a management station, the ASC shall support the number of analog auxiliary ports of the resolution and direction (input, output, or bidirectional) contained in the agency procurement specification. If the agency procurement specification does not define the number, resolution, or direction of analog ports, the ASC supports at least one binary analog output port for external devices.

#### H.1.1.7 Manage Generic Scheduler Requirements

Requirements for managing the scheduler follow.

##### H.1.1.7.1 Configure Timebased Scheduler Month-Day-Date

Upon request from a management station, the ASC shall store the month, day of month, or day of week settings for each day plan for as far as two years in advance within the scheduler. The selection process is first based on the month settings, then the day of month (date) settings, and then the day of week (day) settings.

##### H.1.1.7.2 Configure Timebased Scheduler Day Plans and Timebased Actions

Upon request from a management station, the ASC shall store the day plans within the scheduler, which points to actions to be executed when the month, day, or date and the time within the day plan have been reached (and no other actions, such as manual control overriding timebased scheduling, inhibits the execution of the action).

#### H.1.1.8 Manage Security Definitions Requirements

Requirements for managing the security protections expressed by username and password combinations and assignments of allowed data access for each follow.

##### H.1.1.8.1 Configure Security Definitions

Upon request from a management station, the ASC shall store the configuration of the authorized users, their passwords, and the rights associated with the functions and database of the ASC. The ASC ensures that the configuration can only be edited and modified by authorized users with ASC-specific system-administrative rights.

Copy Per RTM Distribution Permission © 2023 AASHTO / ITE / NEMA

#### H.1.1.9 Manage Dynamic Objects Requirements

Requirements for managing the dynamic objects, which are used to compress the data transmissions of user-selected data for data collection and data configuration follow.

##### H.1.1.9.1 Configure Dynamic Object Requirements

The requirements to configure Dynamic Objects within the ASC follow.

###### H.1.1.9.1.1 Configure Dynamic Object Persistence Time

Upon request from a management station, the device shall store the maximum power outage time, in minutes, before all values in the dynamic objects in the device are invalidated. Valid values are from 0 to 65534 minutes. A value of 0 indicates that all values in the dynamic objects are invalidated upon device powerup. A value of 65535 indicates that all values persist indefinitely.

###### H.1.1.9.1.2 Configure Dynamic Object Configuration ID

Upon request, the device shall store an identifier, which is calculated using all valid values in the dynamic objects. The identifier, which may be a checksum, is generated whenever there is a change to any value in the dynamic objects. The identifier is used to detect any changes to the configuration of dynamic objects.

#### H.1.1.10 Manage Exception Reporting Requirements

The requirements to manage exception reporting are as follows. A detailed explanation of how the design content (that are traced from these requirements) works can be found in Section 6 of NTCIP 1103 v03.

##### H.1.1.10.1 Enable/Disable Exception Reporting

The management station shall be able to enable and disable exception-based reporting for an ASC when user-specified conditions are met.

##### H.1.1.10.2 Configure Exception Reporting Condition Requirements

If exception based reporting is supported, a management station needs to specify the conditions under which the ASC is to automatically transmit data to the management station. The requirements to configure the user-specified conditions that the ASC will monitor upon which the ASC will transmit data to a management station follow.

###### H.1.1.10.2.1 Configure a Monitored (Watch) Object

Upon request from a management station, the ASC shall store the data element to be monitored for a specified change. The allowable changes, if supported by the ASC, are:

a) On-change Event—monitor the data element for changes in value
b) Greater Than Event—monitor the data element for values exceeding a defined threshold
c) Less Than Event—monitor the data element for values falling below a defined threshold
d) Hysteresis Event—monitor the data element for values exceeding an upper limit or dropping below a lower limit
e) Periodic Event—monitor the data element and create a log entry at user-defined intervals
f) Bit Flag Event—monitor the data element for one or more bits of a value becoming true (i.e., obtaining a value of one)

© 2023 AASHTO / ITE / NEMA Copy Per RTM Distribution Permission

#### H.1.1.10.2.2 Configure a Monitored Group of Objects (Watch Block)

Upon request from a management station, the ASC shall store a group of one or more data elements (watch block) to be monitored to determine if a change has occurred to any data element in the group. This requirement allows an ASC to monitor two or more objects such that a change to any of the data elements in the group triggers the ASC to transmit preconfigured data value(s) to a management station. Monitoring a group of data elements provides the ASC with flexibility for supporting event logging and exception-based reporting with a wide variety of possible triggers.

### H.1.1.10.3 Configure Exception Reporting Data Transmission Requirements

If exception based reporting is supported, a management station needs to specify the data to be automatically transmitted by the ASC if user-specified conditions are satisfied. The requirements to configure the data to be automatically transmitted by the ASC to a management station when a monitored condition occurs follow.

#### H.1.1.10.3.1 Configure a Report Object

Upon request from a management station, the ASC shall store a data element whose value is to be transmitted to a management station when a user-specified condition occurs.

#### H.1.1.10.3.2 Configure a Report Group of Objects (Block)

Upon request from a management station, the ASC shall store a group of one or more data elements whose values are to be transmitted to a management station when a user-specified condition occurs. Creating a block object, called a report block, containing this group of data to be transmitted reduces the transmission overhead.

### H.1.1.10.4 Configure Exception Reporting Destination

Upon request from a management station, the ASC shall store the destination(s), in the form of a logical name and an IP address, that pre-configured data is to be transmitted when the user-specified conditions are met. This requirement allows the management station to specify the destination(s) that the pre-configured data is to be transmitted when a user-specified condition occurs.

### H.1.1.10.5 Configure Exception Reporting Community

Upon request from a management station, the ASC shall store the community name to use when pre-configured data is transmitted when the user-specified conditions are met. This requirement allows the management station to specify the community to use for each destination that the pre-configured data is transmitted when a user-specified condition occurs.

### H.1.1.10.6 Configure Exception Reporting Operational Mode Requirements

A management station needs to configure the operation of how and when the pre-configured data is transmitted from the ASC to its destination, and the response of the destination management station when the data transmission is received. The requirements to configure the operations for exception-based reporting follows.

#### H.1.1.10.6.1 Configure Exception Reporting Acknowledgement

Upon request from a management station, the ASC shall store if an acknowledgement is expected from the destination management station when pre-configured data is transmitted when user-specified conditions are met. If an acknowledgement is expected, the destination management station is expected to acknowledge receipt of the pre-configured data back to the ASC. If an acknowledgement from the

Copy Per RTM Distribution Permission © 2023 AASHTO / ITE / NEMA

destination management station is not received, the ASC will retransmit (retry) the data until an acknowledgement is received or the maximum number of retries is reached.

#### H.1.1.10.6.2 Configure Exception Reporting Aggregation

Upon request from a management station, the ASC shall configure if the pre-configured data to be transmitted when user-specified conditions are met is aggregated before actual transmission. If enabled, pre-configured data to be transmitted is aggregated until a specific event occurs, until enough events have occurred, or until the buffer with the aggregated data has been filled. Support for aggregated data transmissions allows the reduction of data transmissions, reduces message overhead, and aggregates the data transmissions until the communications channel to the management station is available.

#### H.1.1.10.6.3 Configure Exception Reporting Queue

Upon request from a management station, the ASC shall configure if the pre-configured data to be transmitted when user-specified conditions are met is queued until the communications link between the ASC and the destination management station is available for transmission. If enabled, pre-configured data to be transmitted to a destination management station is queued until an acknowledgement is received (if acknowledgement is expected) and other previously transmitted pre-configured data in the queue is acknowledged (if acknowledgement is expected), OR an error condition for the communications link between the ASC and destination management station is cleared.

#### H.1.1.10.6.4 Configure Exception Reporting (Forced)

Upon request from a management station, the ASC shall store if re-configured data to be transmitted immediately (forced) when user-specified conditions are met. If a data transmission is 'forced,' the data transmission is not queued and is transmitted regardless of the current link state between the ASC and the destination management station. 'Forced' data transmissions do not require any acknowledgement from the destination management station.

#### H.1.1.10.6.5 Configure Exception Reporting Communications

Upon request from a management station, the ASC shall store the communications protocols to be used to transmit pre-configured data to a destination. The communications protocols consist of the application layer protocol (snmp v1, sfmp), transport profile (T2 encapsulation, udp), and port of the destination management station.

#### H.1.1.10.6.6 Configure Exception Reporting—Maximum Rate

Upon request from a management station, the ASC shall store the maximum number of data transmissions that can be generated in one minute for a specific communications link. This requirement prevents an ASC from flooding the communications network with exception-based messages.

### H.1.1.10.7 Determine Watch Block Capabilities

Upon request from a management station, the ASC shall report the maximum number of data elements that the ASC can include in the watch blocks and the maximum number of watch blocks that can be configured in the ASC.

### H.1.1.10.8 Determine Report Block Capabilities

Upon request from a management station, the ASC shall report the maximum number of data elements that the ASC can log in the report blocks and the maximum number of report blocks that can be configured in the ASC.

© 2023 AASHTO / ITE / NEMA Copy Per RTM Distribution Permission

#### H.1.1.10.9 Determine Exception Reporting Trap Channel Capabilities

Upon request from a management station, the ASC shall report the maximum number of "trap channels" supported by the ASC. Each trap channel defines the destination management station, the communications protocols to be used, and an operational configuration for how and when the pre-configured data is transmitted from the ASC to its destination, and the response of the destination management station when the data transmission is received.

Note: The concept of a trap channel is introduced here for clarity.

#### H.1.1.10.10 Determine Exception Reporting Aggregation Capabilities

Upon request from a management station, the ASC shall report the capabilities of the ASC to aggregate pre-configured data for transmission. The ASC's capabilities for exception reporting data are defined by the maximum number of events (user-defined conditions that are met) and the maximum size (in bytes) of aggregated data (for transmission).

#### H.1.1.10.11 Determine Event Reporting Latency

Upon request from a management station, the ASC shall report the maximum amount of time, in milliseconds, that may elapse between an event's occurrence and the time reported for that event. The latency should consider all sources of latency, including hardware and firmware delays. The range of values is from 0 to 1000 milliseconds. A value of 0 indicates that the ASC reports accurate event times with millisecond resolution. A value of 1000 indicates that the device cannot accurately report sub-second event times.

#### H.1.1.10.12 Monitor Communications Link State

Upon request from a management station, the ASC shall return the state of the communications link for a specific trap channel. The valid status values are as follows:

a) Ready—Any exception report data can be sent to the destination management station
b) Pending—Waiting for an acknowledgement from the destination management station for the last transmitted exception report data
c) Error—An acknowledgement has not been received from the destination management station for the last transmitted exception report data and the allowed number of retries (to resend the exception report data) has been exceeded
d) Other—State not defined by this standard

#### H.1.1.10.13 Monitor Exception Based Reporting Status Requirements

The requirements to determine the status of an alarm for a specific trap channel follow.

#### H.1.1.10.13.1 Monitor Exception Based Communications Link Error

Upon request from a management station, the ASC shall return an alarm value when there is an error in the communications link of a specific trap channel.

#### H.1.1.10.13.2 Monitor Exception Based Maximum Rate Exceeded

Upon request from a management station, the ASC shall return an alarm value when the number of data transmissions generated exceeds the maximum number of allowable data transmissions in a minute for a specific trap channel.

Copy Per RTM Distribution Permission © 2023 AASHTO / ITE / NEMA

#### H.1.1.10.13.3 Monitor Exception Based Queue Full Error

Upon request from a management station, the ASC shall return an alarm value when the queue for pre-configured data to be transmitted on a specific trap channel is full.

#### H.1.1.10.14 Monitor Exception Based Transmissions

Upon request from a management station, the ASC shall return the sequence number assigned to the last data transmission on a specific trap channel. This requirement allows a management station to determine if a data transmission on the trap channel is a duplicate or if a data transmission has been lost.

#### H.1.1.10.15 Monitor Number of Lost Queued Exception Based Reports

Upon request from a management station, the ASC shall return the number of exception based reports that have been discarded due to a queue full error for a specific trap channel. This requirement allows a management station to determine if exception based reports have been lost because of a queue full error.

#### H.1.1.10.16 Monitor Number of Exception Based Events

Upon request from a management station, the ASC shall return the number of occurrences of a user-specified condition for a specific trap channel since the last reset of the ASC.

#### H.1.1.10.17 Monitor Exception Based Data

Upon request from a management station, the ASC shall return the contents of a trap message. A trap message consists of the user-specified condition that triggered the exception based report and the pre-configured data. If the pre-configured data is aggregated, the trap message also contains a sequence number assigned to the aggregated data.

#### H.1.1.10.18 Clear Event Class

Upon request from a management station, the ASC shall clear all information related to the requested event class from the report node (globalReport).

#### H.1.1.10.19 Clear Event Configuration

Upon request from a management station, the ASC shall clear all information related to the requested event configuration from the report node (globalReport).

#### H.1.1.10.20 Clear Event Log Table

Upon request from a management station, the ASC shall clear all the log entries from the event logs.

#### H.1.1.10.21 Clear Report Objects

Upon request from a management station, the ASC shall clear all report objects and report block definitions in the ASC.

#### H.1.1.10.22 Clear Report Blocks

Upon request from a management station, the ASC shall delete all report blocks definitions in the ASC.

#### H.1.1.10.23 Clear Watch Objects

Upon request from a management station, the ASC shall clear all watch objects and watch block definitions in the ASC.

© 2023 AASHTO / ITE / NEMA Copy Per RTM Distribution Permission

#### H.1.1.10.24 Clear Watch Blocks

Upon request from a management station, the ASC shall delete all watch blocks definitions in the ASC.

#### H.1.1.10.25 Clear Exception Based Reporting Tables

Upon request from a management station, the ASC shall clear all the user-specified conditions for automatically transmitting data to the management station.

#### H.1.1.10.26 Reset a Communications Link

Upon request from a management station, the ASC shall reset a communications link providing exception-based data to be acknowledged. For such communications links, a sequence number is included with each piece of exception-based data transmitted—no additional exception-based data is transmitted on this communications link by the ASC until the previously transmitted data is acknowledged or the communications link is reset (in case the data is lost in transit).

### H.1.1.11 Configure System Contact Information

Upon request from a management station, the ASC shall store a contact name for the device, including how to contact this person.

### H.1.1.12 Monitor Other System Information

Upon request from a management station, the ASC shall return information regarding the system operation, including the system description, the authoritative identification (as an object identifier) of the network management subsystem contained in the ASC, the time (in hundredths of a second) since the network management portion of the ASC was last re-initialized, and the set of services that the ASC offers.

## H.1.2 Generic Status Monitoring Requirements

Requirements for monitoring the status of an ASC controller follow.

### H.1.2.1 Monitor Status of External Device

Upon request from a management station, the ASC shall return the following information for the indicated auxiliary port:

a) Current state
b) Last commanded state

### H.1.2.2 Retrieve Database Management Requirements

Requirements for monitoring the database management within the ASC follow.

#### H.1.2.2.1 Monitor Database Operation

Upon request from a management station, the ASC shall return the current database management function status, such as opening the database, allowing data to be written into the database, verifying the validity and coherence of the written data, and closing the database, after which time, the ASC starts using the new data.

Copy Per RTM Distribution Permission © 2023 AASHTO / ITE / NEMA

#### H.1.2.2.2 Monitor Database Operation Status

Upon request from a management station, the ASC shall return the current database management function status to determine whether a database modification action was successfully executed by the ASC.

#### H.1.2.2.3 Monitor Database Operation Error Status

Upon request from a management station, the ASC shall return the current database management function status to determine which error has occurred in conjunction with the modification of the database values.

### H.1.2.3 Retrieve Generic Scheduler Settings Requirements

Requirements for retrieving the scheduler data follow.

#### H.1.2.3.1 Monitor Timebased Scheduler Month-Day-Date

Upon request from a management station, the ASC shall return the month, day of month, or day of week settings for each defined day plan configured for as far as 2 years in advance within the scheduler.

#### H.1.2.3.2 Monitor Timebased Scheduler Day Plans and Timebased Actions

Upon request from a management station, the ASC shall return the hour and minute settings and the action to be executed for each defined day plan and defined day plan event configured within the scheduler. A defined action is executed when the month, date, day, and time (hour and minute) within the day plan have been reached.

#### H.1.2.3.3 Monitor Active Timebased Schedule

Upon request from a management station, the ASC shall return the Month-Day-Date entry within the scheduler that is currently selected for use.

> Note: A schedule entry indicated to be active does not mean that this schedule entry is actually active (because other actions within the device, such as manual control overriding timebased scheduling, might override the activation and use of the selected day plan).

#### H.1.2.3.4 Monitor Active Timebased Schedule Day Plan and Timebased Actions

Upon request from a management station, the ASC shall return the day plan within the scheduler that is currently selected for use.

> Note: A day plan indicated to be active does not mean that this plan is actually active (because other actions within the ASC, such as manual control overriding timebased scheduling, might override the activation and use of the selected day plan).

### H.1.2.4 Retrieve Security Definitions Requirements

Requirements for monitoring the security protections expressed by username and password combinations and assignments of allowed data access for each are provided in the following subsections.

#### H.1.2.4.1 Determine Security Definitions

Upon request from a management station, the ASC shall return the configuration of the authorized users, their passwords, and the rights associated with the functions and database of the ASC. The ASC ensures

© 2023 AASHTO / ITE / NEMA Copy Per RTM Distribution Permission

that the configuration can only be viewed by authorized users with ASC-specific system-administrative rights.

#### H.1.2.5 Retrieve Dynamic Objects Requirements

Requirements for retrieving the dynamic objects, which are used to compress the data transmissions of user-selected data for data collection and data configuration, are provided in the following subsections.

##### H.1.2.5.1 Determine Dynamic Objects Requirements

The requirements to determine the configuration settings for Dynamic Objects within the ASC follow.

###### H.1.2.5.1.1 Determine Dynamic Object Persistence Time

Upon request, the device shall return the maximum power outage time, in minutes, before all values in the dynamic objects in the device are invalidated. Valid values are from 0 to 65534 minutes. A value of 0 indicates that all values in the dynamic objects are invalidated upon device power up. A value of 65535 indicates that all values persist indefinitely.

###### H.1.2.5.1.2 Determine Dynamic Object Configuration ID

Upon request, the device shall return an identifier, which is calculated using all valid values in the dynamic objects. The identifier, which may be a checksum, is generated whenever there is a change to any value in the dynamic objects. The identifier is used to detect any changes to the configuration of dynamic objects.

##### H.1.2.5.2 Monitor STMP-Related Communications Requirements

The requirements to retrieve the statistics for the data exchanges between a management center and an ASC when using the Simple Transportation Management Protocol (STMP) follow.

###### H.1.2.5.2.1 Monitor STMP Data Exchange Requirements

The requirements to determine the statistics pertaining to STMP data exchanges such as the number of GETs or SETs, and other statistical information within the ASC follow.

###### H.1.2.5.2.1.1 Monitor Incoming and Outgoing STMP Packet Exchanges

Upon request from a management station, the ASC shall return the statistics pertaining to incoming and outgoing STMP data packet exchanges.

###### H.1.2.5.2.1.2 Monitor Incoming and Outgoing STMP Packet Types

Upon request from a management station, the ASC shall return the statistics pertaining to incoming and outgoing STMP data packet types such as GET, SET, GETNext Requests, SET, SET-NoReplies, and Error Responses.

###### H.1.2.5.2.2 Monitor STMP Data Exchange Error Requirements

The requirements to determine the error statistics pertaining to STMP data exchanges such as the number of failed data exchanges and data package size errors within the ASC follow.

Copy Per RTM Distribution Permission © 2023 AASHTO / ITE / NEMA

#### H.1.2.5.2.2.1 Monitor Incoming and Outgoing STMP Error Exchanges—Too Big Error

Upon request from a management station, the ASC shall return the error statistics pertaining to incoming and outcoming STMP data exchanges with errors based on the data packets being too big.

#### H.1.2.5.2.2.2 Monitor Incoming and Outgoing STMP Error Exchanges—No Such Name

Upon request from a management station, the ASC shall return the error statistics pertaining to incoming and outcoming STMP data exchanges with no such name errors.

#### H.1.2.5.2.2.3 Monitor Incoming and Outgoing STMP Error Exchanges—Bad Value

Upon request from a management station, the ASC shall return the error statistics pertaining to incoming and outcoming STMP data exchanges with bad value errors.

#### H.1.2.5.2.2.4 Monitor Incoming and Outgoing STMP Error Exchanges—Read-Only

Upon request from a management station, the ASC shall return the error statistics pertaining to incoming and outcoming STMP data exchanges containing SET commands to read-only objects.

#### H.1.2.5.2.2.5 Monitor Incoming and Outgoing STMP Error Exchanges—General Error

Upon request from a management station, the ASC shall return the error statistics pertaining to incoming and outcoming STMP data exchanges with general errors.

### H.1.3 Generic Data Retrieval Requirements

There are no data retrieval requirements for a generic device controller.

### H.1.3.1 Support Logged Data

Requirements for managing the logged data follow.

#### H.1.3.1.1 Retrieve Current Configuration of Logging Service

Upon request from a management station, the ASC shall return the current configuration of the event logging service, including the classes and types of events that are currently configured.

#### H.1.3.1.2 Configure Event Logging Service

Upon request from a management station, the ASC shall configure the event logging service as requested, including configuration of the event classes and event types to log.

#### H.1.3.1.3 Retrieve Event Logged Data

Upon request from a management station, the ASC shall return the event log.

#### H.1.3.1.4 Configure Clearing of Event Class Log

Upon request from a management station, the ASC shall clear the indicated log entries of a given event class that are less than or equal to a given time.

© 2023 AASHTO / ITE / NEMA Copy Per RTM Distribution Permission

#### H.1.3.1.5 Determine Capabilities of Event Logging Service

Upon request from a management station, the ASC shall return the capabilities of the event logging service, including the number of classes, number of event types, and number of events that can be supported by the ASC.

#### H.1.3.1.6 Determine Number of Logged Events per Event Class

Upon request from a management station, the ASC shall return the total number of events within the event class that the device has currently in its event log.

#### H.1.3.1.7 Support a Number of Events to Store in Log

Upon request from a management station, the ASC event log shall support the number of events as defined in the agency procurement specification, up to a maximum of 65535 events. If the agency procurement does not define the number of events for the log, the ASC supports at least one event in the log.

#### H.1.3.1.8 Configure Clearing of Global Log

Upon request from a management station, the ASC shall allow a management station to clear all log entries in the event log.

#### H.1.3.1.9 Determine Total Number of Logged Events

Upon request from a management station, the ASC shall allow a management station to determine the total number of events that the ASC has logged since powerup.

#### H.1.3.1.10 Determine Number of Events Within a Class

Upon request from a management station, the ASC shall allow a management station to determine the number of events that the ASC has in the log for a specified event class.

#### H.1.3.1.11 Determine Event Logging Resolution

Upon request from a management station, the ASC shall return the frequency (resolution) with which the ASC logs new events within the log, separately for each event class, with a resolution of 0.1 seconds.

#### H.1.3.1.12 Clear Event Configuration

Upon request from a management station, the ASC shall allow a management station to clear one or all event configurations, except for the pre-configured event configurations.

#### H.1.3.1.13 Clear Event Classes

Upon request from a management station, the ASC shall allow a management station to clear one or all existing event classes, except for the pre-configured event classes.

#### H.1.3.1.14 Clear Event Class Log

Upon request from a management station, the ASC shall allow a management station to clear all logged events for the event classes.

Copy Per RTM Distribution Permission © 2023 AASHTO / ITE / NEMA

#### H.1.3.1.15 Retrieve Non-Sequential Clock Changes

Upon request from a management station, the ASC shall allow a management station to retrieve the timestamp, the new time, and the source of the new time that caused a non-sequential clock change.

### H.1.3.2 Supplemental Requirements for Event Monitoring

Supplemental requirements for monitoring for the occurrence of certain events follow.

#### H.1.3.2.1 Record and Timestamp Events

Upon request from a management station, the ASC shall support the capability to record configured event types with timestamps, in a local log (log contained in the device controller), upon request by the user and/or the management station.

#### H.1.3.2.2 Support a Number of Event Classes

Upon request from a management station, the ASC shall support the number of event classes as defined by the specification. If the specification does not define the number of event classes, the ASC supports at least one event class.

#### H.1.3.2.3 Support a Number of Events to Log

Upon request from a management station, the ASC shall support the maximum number of events as defined by the specification.

#### H.1.3.2.4 Support Monitoring of Event Type Requirements

Supplemental requirements for monitoring types of events follow.

##### H.1.3.2.4.1 Support On-Change Events

Upon request from a management station, the ASC shall allow any event type configuration to monitor data for changes in value.

##### H.1.3.2.4.2 Support Greater Than Events

Upon request from a management station, the ASC shall allow any event type configuration to monitor data for values exceeding a defined threshold for a period of time.

##### H.1.3.2.4.3 Support Less Than Events

Upon request from a management station, the ASC shall allow any event type configuration to monitor data for values falling below a defined threshold for a period of time.

##### H.1.3.2.4.4 Support Hysteresis Events

Upon request from a management station, the ASC shall allow any event type configuration to monitor data for values exceeding an upper limit or dropping below a lower limit.

##### H.1.3.2.4.5 Support Periodic Events

Upon request from a management station, the ASC shall allow any event type configuration to monitor data on a periodic basis.

© 2023 AASHTO / ITE / NEMA Copy Per RTM Distribution Permission

#### H.1.3.2.4.6 Support Bit Flag Events

Upon request from a management station, the ASC shall allow any event type configuration to monitor one or more bits of a value becoming true (e.g., obtaining a value of one).

#### H.1.3.2.4.7 Support Event Monitoring on Any Data

Upon request from a management station, the ASC shall allow a management station to configure any event type to monitor any piece of data supported by the ASC within the logical rules of the type of event (e.g., ASCII strings should not be monitored with greater than or less than conditions).

Note: This allows a user to monitor an event based on the value of any data.

### H.1.4 Generic Control Requirements

Requirements for controlling an ASC controller follow.

#### H.1.4.1 Control External Device

Upon request from a management station, the ASC shall activate or de-activate, as requested, a simple external device connected through an analog auxiliary port.

#### H.1.4.2 Control Database Operation Requirements

Requirements for controlling the operations on the ASC database follow.

#### H.1.4.2.1 Control Database Access

Upon request from a management station, the ASC shall allow opening or closing the ASC database and if open, shall allow data to be written into the database.

#### H.1.4.2.2 Perform Database Consistency Check

Upon request from a management station, the ASC shall allow consistency checks to be performed within database to verify the validity and coherence of the written data. Once the consistency checks have been passed successfully, the ASC starts using the new data.

#### H.1.4.2.3 Enforce Consistency Check Parameters

Upon request to store specific database parameters from a management station, the ASC shall enforce that specific database parameters can only be stored in the ASC's database, if they are set as part of a database consistency check (and not with a direct SNMP or STMP SET command). The ASC returns an SNMP general error, if the management station attempts to store one of these specific database parameters bypassing the consistency check.

### H.1.5 Generic Performance Requirements

#### H.1.5.1 Atomic Operations

Reports shall be generated based on atomic operations to prevent multiple reports of the same atomic event. The guidelines for timing and atomic operations are found in NTCIP 1103 v03, Section 6.1.1.

Copy Per RTM Distribution Permission © 2023 AASHTO / ITE / NEMA

## H.2 Derived Global Dialogs

### H.2.1 Manage Communications Environment

Standardized dialogs for managing the communications environment that are more complex than simple GETs or SETs are defined in the following subsections.

#### H.2.1.1 Retrieve Current Configuration of Event Reporting and Logging Service

The standardized dialog for a management station to determine the current configuration of the logging service and/or exception reporting events shall be as follows:

a) (Precondition) The management station shall be aware of the number of classes and event configurations supported by the ASC (see Annex A for Requirement 3.4.2.5).
b) For each row of the event class table, the management station shall GET the following data:
   1) eventClassLimit.x
   2) eventClassClearTime.x
   3) eventClassDescription.x
c) For each row of the event configuration table, the management station shall GET the following data:
   1) eventConfigClass.y
   2) eventConfigMode.y
   3) eventConfigCompareValue.y
   4) eventConfigCompareValue2.y
   5) eventConfigCompareOID.y
   6) eventConfigLogOID.y
   7) eventConfigAction.y
   8) eventConfigStatus.y

   Where:
   x = event class number
   y = event configuration identifier

   Note: Depending on the value of eventConfigMode, not all other objects may be necessary for the event to be defined; however, they shall always be SET as a part of the standardized dialog.

#### H.2.1.2 Configuring Reporting/Logging Service

The standardized dialog for a management station to configure the logging service or events to be reported shall be as follows:

a) (Precondition) The management station shall determine that there are sufficient rows in the event configuration and event class tables to download the proposed configuration.
b) The management station shall SET the following data to the desired values to configure each desired event class:
   1) eventClassLimit.x
   2) eventClassClearTime.x
   3) eventClassDescription.x

   Note: Each event type to be monitored is classified into one event class. For example, critical events may be grouped into Class 1 events and warnings may be grouped into Class 2 events. This step defines the structure of each class of events.

c) The management station shall SET the following data to the desired values to configure each desired event to be monitored:
   1) eventConfigClass.y
   2) eventConfigMode.y

© 2023 AASHTO / ITE / NEMA Copy Per RTM Distribution Permission

3) eventConfigCompareValue.y
4) eventConfigCompareValue2.y
5) eventConfigCompareOID.y
6) eventConfigLogOID.y
7) eventConfigAction.y

Note: Depending on the value of eventConfigMode, not all other objects may be necessary for the event to be defined; however, they shall always be SET as a part of the standardized dialog.

d) The management station shall GET eventConfigStatus.y to check that there is not an error in the configuration.

Where:
x = event class number
y = event configuration identifier

#### H.2.1.3 Retrieving Logged Data

The standardized dialog for a management station to retrieve logged data shall be as follows:

a) (Precondition) The management station shall be aware of the number of events that had previously been reported for the device for the subject event class (e.g., from the previous performance of this operation).
b) The management station shall GET the following data:
   1) eventClassNumRowsInLog.x
   2) eventClassNumEvents.x
c) If eventClassNumEvents.x has not changed since the previous reading, the management station shall exit the process. Otherwise, the management station shall determine the additional number of events that have occurred since the last read.

   Note: This is generally determined by subtracting the previous number of events from eventClassNumEvents; however, since this object wraps at 65535, the management station should be prepared to determine the differential if eventClassNumEvents is less than the previous number.

d) The management station shall determine the lesser of eventClassNumRowsInLog and the additional number of events that have occurred since the last read. This number shall be termed the Events to Read.
e) Starting with y = eventClassNumRowsInLog and working down until y = (eventClassNumRowsInLog - Events to Read), the management station shall GET the following data:
   1) eventLogID.x.y
   2) eventLogTime.x.y
   3) eventLogValue.x.y
f) Repeat the same GET operation with y decremented by one (1) for each set of duplicated values (until y reaches a value of zero (0)).

   Note: If the event class is full and another event occurs, the new event is recorded in the last entry and all previously logged data is moved to one index lower, with index 1 being deleted from the table. Thus, if a duplicate row is detected (e.g., same event at same time), it is likely an indication that the same event is being read and that a new event was added to the log.

   Note: The management station may wish to clear the event log after the read to minimize the above problem.

Copy Per RTM Distribution Permission © 2023 AASHTO / ITE / NEMA

Where:
x = event log class
y = event log number

### H.2.2 Determining Device Component Information

The standardized dialog for a management station to identify the hardware and software configuration of a NTCIP device shall be as follows:

a) The management station shall GET the object globalMaxModules.0.
b) For each row in the module table, the management station shall GET the following objects:
   1) moduleDeviceNode.x,
   2) moduleMake.x,
   3) moduleModel.x,
   4) moduleVersion.x,
   5) moduleType.x.

Where:
x = module number

### H.2.3 Global Time Data

The following subsection identifies the interface to a field device to obtain and manage time related information.

#### H.2.3.1 Graphical Depiction of Global Time Data

See Figure 23.

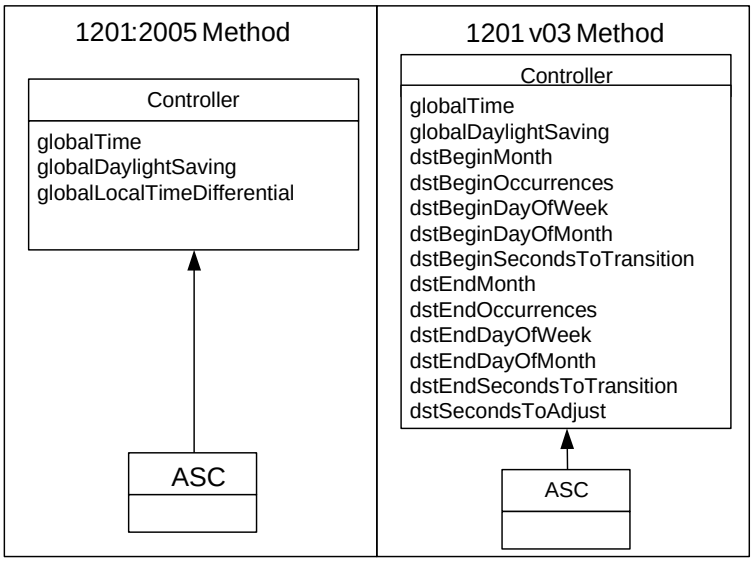


**Figure 23 Global Time Data**

© 2023 AASHTO / ITE / NEMA 

### H.2.4 Configure Events

See NTCIP 1103 v03 for the definition of how events shall be managed.

### H.2.5 Generic Retrieve Table Dialog

Note: This is a generic dialog that is referenced by requirements in the RTM with specific object names. This generic dialog does NOT supersede the requirements and mechanism of the Block Object management defined in NTCIP 1201 v03, Section 2.3 and Annex A.1. If the rows of a table are retrieved using a Block Object, the block object retrieval process defined in NTCIP 1201 v03 governs.

The list of objects provided by the specific dialog shall include:

a) an object that indicates the number of rows in the table;
b) the object(s) that serve as the index field of the table row; and
c) the list of columnar objects to be retrieved from the table.

The standardized dialog for a management station to retrieve a table shall be as follows:

a) The management station shall GET the number of rows in the table.
b) For each row of the table, the management station shall GET all objects referenced by the specific dialog that references this generic dialog, except for the number of rows object and the index object(s).

For example, the standardized dialog for a management station to identify the hardware and software configuration of a NTCIP device would be as follows:

a) The management station shall GET the object globalMaxModules.0.
b) For each row in the module table, the management station shall GET the following objects:
    1) moduleDeviceNode.x,
    2) moduleMake.x,
    3) moduleModel.x,
    4) moduleVersion.x,
    5) moduleType.x.

Where:

x = module number

### H.2.6 Generic Retrieve Table Row Dialog

Note: This is a generic dialog that is referenced by other dialogs with specific object names. This generic dialog does NOT supersede the requirements and mechanism of the Block Object management defined in NTCIP 1201 v03, Section 2.3 and Annex A.1. If the rows of a table are retrieved using a Block Object, the block object retrieval process defined in NTCIP 1201 v03 governs.

The list of objects provided by the specific dialog shall include:

a) the object(s) that serve as the index field of the table row; and
b) the list of columnar objects to be retrieved from the table.

The standardized dialog for a management station to retrieve a table shall be as follows:

a) (Precondition) The management station shall be aware of which row of the table is to be retrieved.

Copy Per RTM Distribution Permission © 2023 AASHTO / ITE / NEMA

b) For the specified row, the management station shall GET all objects referenced by the specific dialog that references this generic dialog, except for the index object(s).

### H.2.7 Generic Configure Table Row

Note: This is a generic dialog that is referenced by other dialogs with specific object names.

The list of objects provided by the specific dialog shall include:

a) the object(s) that serve as the index field of the table row; and
b) the list of columnar objects to be configured and their desired values.

The standardized dialog for a management station to configure a table row shall be as follows:

a) (Precondition) The management station shall be aware of which row in the table is to be configured.
b) For the specified row, the management station shall SET all objects (to their desired values) referenced by the specific dialog that references this generic dialog, except for the index object(s).

## H.3 External Data Elements

NTCIP 1202 v03 references data elements within this annex that are physically defined within NTCIP 1201 v03. See NTCIP 1201 v03.

© 2023 AASHTO / ITE / NEMA Copy Per RTM Distribution Permission

# Annex I
# Communications Ports Protocols [Normative]

This annex content serves as a reference for the standardized communications protocols used by the communications ports.

> Note: At the time, the ASC WG needed to reference certain information from Internet Standards and RFCs developed and maintained by the Internet Engineering Task Force (IETF). These IETF standards and RFCs do not contain either functional requirements or dialogs, which were added in Sections 3 and 4 of this document, and these standards included many options, which needed to be addressed and specified for the use within actuated signal controllers complying with NTCIP 1202 v03 (this standard). The content presented here was originally contained in NTCIP 1202 v02 and has been retained, except where shown.

The different tables shown below are defined in the following RFC:

| Table Name | Originating IETF Standard or RFC |
|---|---|
| SNMP Group | RFC 1213 |
| System Group | RFC 1213 |
| RS232 Group | RFC 1317 |
| HDLC Group | RFC 1381 |
| Interfaces Group | RFC 1213 |
| IP Group | RFC 1213 |
| ICMP Group | RFC 1213 |
| TCP Group | RFC 1213 |
| UDP Group | RFC 1213 |
| Ethernet Group | RFC 1643 |

## I.1 SNMP Group

The SNMP Group shall consist of the following objects:

| SNMP Group | | | | | | |
|---|---|---|---|---|---|---|
| rfc 1213 | Object Name | Object Type | Object Status | Object Support | Allowed Values | Supported Values |
| snmp | **SNMP Group** | -- | M | Yes | --- | |
| snmp.1 | snmpInPkts | S | snmp : M | Yes | Counter | |
| snmp.2 | snmpOutPkts | S | snmp : M | Yes | Counter | |
| snmp.3 | snmpInBadVersions | S | snmp : M | Yes | Counter | |
| snmp.4 | snmpInBadCommunityNames | S | snmp : M | Yes | Counter | |
| snmp.5 | snmpInBadCommunityUses | S | snmp : M | Yes | Counter | |
| snmp.6 | snmpInASNParseErrs | S | snmp : M | Yes | Counter | |
| snmp.8 | snmpInTooBigs | S | snmp : M | Yes | Counter | |
| snmp.9 | snmpInNoSuchNames | S | snmp : M | Yes | Counter | |
| snmp.10 | snmpInBadValues | S | snmp : M | Yes | Counter | |
| snmp.11 | snmpInReadOnlys | S | snmp : M | Yes | Counter | |
| snmp.12 | snmpInGenErrs | S | snmp : M | Yes | Counter | |
| snmp.13 | snmpInTotalReqVars | S | snmp : O | Yes / No | Counter | |
| snmp.14 | snmpInTotalSetVars | S | snmp : O | Yes / No | Counter | |
| snmp.15 | snmpInGetRequests | S | snmp : M | Yes | Counter | |
| snmp.16 | snmpInGetNexts | S | snmp : M | Yes | Counter | |
| snmp.17 | snmpInSetRequests | S | snmp : M | Yes | Counter | |
| snmp.18 | snmpInGetResponses | S | snmp : M | Yes | Counter | |


© 2023 AASHTO / ITE / NEMA

| SNMP Group | | | | | | |
|---|---|---|---|---|---|---|
| rfc 1213 | Object Name | Object Type | Object Status | Object Support | Allowed Values | Supported Values |
| snmp.19 | snmpInTraps | S | snmp : M | Yes | Counter | |
| snmp.20 | snmpOutTooBigs | S | snmp : M | Yes | Counter | |
| snmp.21 | snmpOutNoSuchNames | S | snmp : M | Yes | Counter | |
| snmp.22 | snmpOutBadValues | S | snmp : M | Yes | Counter | |
| snmp.24 | snmpOutGenErrs | S | snmp : M | Yes | Counter | |
| snmp.25 | snmpOutGetRequests | S | snmp : M | Yes | Counter | |
| snmp.26 | snmpOutGetNexts | S | snmp : M | Yes | Counter | |
| snmp.27 | snmpOutSetRequests | S | snmp : M | Yes | Counter | |
| snmp.28 | snmpOutGetResponses | S | snmp : M | Yes | Counter | |
| snmp.29 | snmpOutTraps | S | snmp : O | Yes / No | Counter | |
| snmp.30 | snmpEnableAuthenTraps | P | snmp : O | Yes / No | INT | |

| SNMP Group | | | | | | |
|---|---|---|---|---|---|---|
| NTCIP 1103 Clause | Object Name | Object Type | Object Status | Object Support | Allowed Values | Supported Values |
| A.3.1 | snmpmaxPacketSize | S | snmp : M | Yes | 484-65535 | |

## I.2 System Group

The System Group shall consist of the following objects:

| System Group | | | | | | |
|---|---|---|---|---|---|---|
| rfc 1213 | Object Name | Object Type | Object Status | Object Support | Allowed Values | Supported Values |
| system | **System Group** | -- | M | Yes | --- | |
| system 1 | sysDescr | S | system : M | Yes | string | |
| system 2 | sysObjectID | S | system : M | Yes | OID | |
| system 3 | sysUpTime | S | system : M | Yes | TimeTicks | |
| system 4 | sysContact | P | system : M | Yes | string | |
| system 5 | sysName | P | system : M | Yes | atring | |
| system 6 | sysLocation | P | system : M | Yes | string | |
| system 7 | sysServices | S | system : M | Yes | 0..127 | |

## I.3 RS232 Group

The RS232 Group shall consist of the following objects:

| RS232 Group | | | | | | |
|---|---|---|---|---|---|---|
| rfc 1317 | Object Name | Object Type | Object Status | Object Support | Allowed Values | Supported Values |
| rs232 | **RS232 Group** | -- | O | Yes / No | ---- | --- |
| rs232.1 | rs232Number | S | rs232 : M | Yes | INT | |
| rs232.2 | rs232PortTable | -- | rs232 : M | Yes | --- | --- |
| | rs232PortEntry | -- | rs232 : M | Yes | --- | --- |
| rs232.2.1 | rs232PortIndex | S | rs232 : M | Yes | INT | |
| rs232.2.2 | rs232PortType | S | rs232 : M | Yes | 1..5 | |
| | other(1) | -- | --- | Yes / No | --- | --- |
| | rs232(2) | -- | --- | Yes / No | --- | --- |
| | rs422(3) | -- | --- | Yes / No | --- | --- |
| | rs423(4) | -- | --- | Yes / No | --- | --- |
| | v35(5) | -- | --- | Yes / No | --- | --- |
| rs232.2.3 | rs232PortInSigNumber | S | rs232 : O | Yes / No | INT | |
| rs232.2.4 | rs232PortOutSigNumber | S | rs232 : O | Yes / No | INT | |
| rs232.2.5 | rs232PortInSpeed | P | rs232 : M | Yes | INT | |
| rs232.2.6 | rs232PortOutSpeed | P | rs232 : M | Yes | INT | |

© 2023 AASHTO / ITE / NEMA 

| RS232 Group | | | | | | |
|---|---|---|---|---|---|---|
| rfc 1317 | Object Name | Object Type | Object Status | Object Support | Allowed Values | Supported Values |
| rs232.3 | rs232AsyncPortTable | -- | rs232 : M | Yes | --- | --- |
| | rs232AsyncPortEntry | -- | rs232 : M | Yes | --- | --- |
| rs232.3.1 | rs232AsyncPortIndex | S | rs232 : M | Yes | INT | |
| rs232.3.2 | rs232AsyncPortBits | P | rs232 : O | Yes / No | 5..8 | |
| | five(5) | -- | --- | Yes / No | --- | --- |
| | six(6) | -- | --- | Yes / No | --- | --- |
| | seven(7) | -- | --- | Yes / No | --- | --- |
| | eight(8) | -- | --- | Yes / No | --- | --- |
| rs232.3.3 | rs232AsyncPortStopBits | P | rs232 : O | Yes / No | 1..4 | |
| | one(1) | -- | --- | Yes / No | --- | --- |
| | two(2) | -- | --- | Yes / No | --- | --- |
| | one-and-half(3) | -- | --- | Yes / No | --- | --- |
| | dynamic(4) | -- | --- | Yes / No | --- | --- |
| rs232.3.4 | rs232AsyncPortParity | P | rs232 : O | Yes / No | 1..5 | |
| | none(1) | -- | --- | Yes / No | --- | --- |
| | odd(2) | -- | --- | Yes / No | --- | --- |
| | even(3) | -- | --- | Yes / No | --- | --- |
| | mark(4) | -- | --- | Yes / No | --- | --- |
| | space(5) | -- | --- | Yes / No | --- | --- |
| rs232.3.5 | rs232AsyncPortAutobaud | P | rs232 : O | Yes / No | 1..2 | |
| | enabled(1) | -- | --- | Yes / No | --- | --- |
| | disabled(2) | -- | --- | Yes / No | --- | --- |
| rs232.3.6 | rs232AsyncPortParityErrs | S | rs232 : O | Yes / No | Counter | |
| rs232.3.7 | rs232AsyncPortFramingErrs | S | rs232 : M | Yes | Counter | |
| rs232.3.8 | rs232AsyncPortOverrunErrs | S | rs232 : M | Yes | Counter | |

A device may require the rs232PortInSpeed and rs232PortOutSpeed to be the same value. Therefore, a SET of rs232PortInSpeed may automatically SET rs232PortOutSpeed to the same value and vice-versa.

### I.4 HDLC Group

The HDLC Group shall consist of the following objects:

| HDLC Group | | | | | | |
|---|---|---|---|---|---|---|
| rfc 1381 | Object Name | Object Type | Object Status | Object Support | Allowed Values | Supported Values |
| lapb | **HDLC Group** | -- | O | Yes / No | ---- | --- |
| lapb.1 | lapbAdmnTable | -- | lapb : M | Yes | --- | --- |
| | lapbAdmnEntry | -- | lapb : M | Yes | --- | --- |
| lapb.1.1 | lapbAdmnIndex | S | lapb : M | Yes | IfIndexType | |
| lapb.1.2 | lapbAdmnStationType | P | lapb : O | Yes / No | 1..3 | |
| | dte(1) | -- | --- | Yes / No | --- | --- |
| | dce(2) | -- | --- | Yes / No | --- | --- |
| | dxe(3) | -- | --- | Yes / No | --- | --- |
| lapb.1.3 | lapbAdmnControlField | P | lapb : O | Yes / No | 1..2 | |
| | modulo8(1) | -- | --- | Yes / No | --- | --- |
| | modulo128(2) | -- | --- | Yes / No | --- | --- |
| lapb.1.4 | lapbAdmnTransmitN1FrameSize | P | lapb : M | Yes | P Integer | |
| lapb.1.5 | lapbAdmnReceiveN1FrameSize | P | lapb : M | Yes | P Integer | |
| lapb.1.6 | lapbAdmnTransmitKWindowSize | P | lapb : O | Yes / No | 1..127 | |
| lapb.1.7 | lapbAdmnReceiveKWindowSize | P | lapb : O | Yes / No | 1..127 | |
| lapb.1.8 | lapbAdmnN2RxmitCount | P | lapb : O | Yes / No | 0..65535 | |
| lapb.1.9 | lapbAdmnT1AckTimer | P | lapb : M | Yes | P Integer | |
| lapb.1.10 | lapbAdmnT2AckDelayTimer | P | lapb : M | Yes | P Integer | |
| lapb.1.11 | lapbAdmnT3DisconnectTimer | P | lapb : M | Yes | P Integer | |
| lapb.1.12 | lapbAdmnT4IdleTimer | P | lapb : M | Yes | P Integer | |
| lapb.1.13 | lapbAdmnActionInitiate | P | lapb : O | Yes / No | 1..5 | |
| | sendSABM(1) | -- | --- | Yes / No | --- | --- |
| | sendDISC(2) | -- | --- | Yes / No | --- | --- |
| | sendDM(3) | -- | --- | Yes / No | --- | --- |


© 2023 AASHTO / ITE / NEMA

| HDLC Group | | | | | | |
|---|---|---|---|---|---|---|
| rfc 1381 | Object Name | Object Type | Object Status | Object Support | Allowed Values | Supported Values |
| | none(4) | -- | --- | Yes / No | --- | --- |
| | other(5) | -- | --- | Yes / No | --- | --- |
| lapb.1.14 | lapbAdmnActionRecvDM | P | lapb : O | Yes / No | 1..3 | |
| | sendSABM(1) | -- | --- | Yes / No | --- | --- |
| | sendDISC(2) | -- | --- | Yes / No | --- | --- |
| | other(3) | -- | --- | Yes / No | --- | --- |
| lapb.2 | lapbOperTable | -- | lapb : M | Yes | ---- | --- |
| | lapbOperEntry | -- | lapb : M | Yes | ---- | --- |
| lapb.2.1 | lapbOperIndex | S | lapb : M | Yes | IfIndexType | |
| lapb.2.2 | lapbOperStationType | S | lapb : O | Yes / No | 1..3 | |
| | dte(1) | -- | --- | Yes / No | --- | --- |
| | dce(2) | -- | --- | Yes / No | --- | --- |
| | dxe(3) | -- | --- | Yes / No | --- | --- |
| lapb.2.3 | lapbOperControlField | S | lapb : O | Yes / No | 1..2 | |
| | modulo8(1) | -- | --- | Yes / No | --- | --- |
| | modulo128(2) | -- | --- | Yes / No | --- | --- |
| lapb.2.4 | lapbOperTransmitN1FrameSize | S | lapb : O | Yes / No | P Integer | |
| lapb.2.5 | lapbOperReceiveN1FrameSize | S | lapb : O | Yes / No | P Integer | |
| lapb.2.6 | lapbOperTransmitKWindowSize | S | lapb : O | Yes / No | 1..127 | |
| lapb.2.7 | lapbOperReceiveKWindowSize | S | lapb : O | Yes / No | 1..127 | |
| lapb.2.8 | lapbOperN2RxmitCount | S | lapb : O | Yes / No | 0..65535 | |
| lapb.2.9 | lapbOperT1AckTimer | S | lapb : O | Yes / No | P Integer | |
| lapb.2.10 | lapbOperT2AckDelayTimer | S | lapb : O | Yes / No | P Integer | |
| lapb.2.11 | lapbOperT3DisconnectTimer | S | lapb : O | Yes / No | P Integer | |
| lapb.2.12 | lapbOperT4IdleTimer | S | lapb : O | Yes / No | P Integer | |
| lapb.2.13 | lapbOperPortId | S | lapb : M | Yes | OID | |
| lapb.2.14 | lapbOperProtocolVersionID | S | lapb : O | Yes / No | OID | |

'P Integer = Positive Integer

## I.5 Interfaces Group

The Interfaces Group shall consist of the following objects:

| Interfaces Group | | | | | | |
|---|---|---|---|---|---|---|
| rfc 1213 | Object Name | Object Type | Object Status | Object Support | Allowed Values | Supported Values |
| if | **Interfaces Group** | -- | O | Yes / No | ---- | --- |
| if.1 | ifNumber | S | if : M | Yes | --- | |
| if.2 | ifTable | -- | if : M | Yes | --- | --- |
| | ifEntry | -- | if : M | Yes | --- | --- |
| if.2.1 | ifIndex | S | if : M | Yes | INT | |
| if.2.2 | ifDescr | S | if : M | Yes | string | |
| if.2.3 | ifType | S | if : M | Yes | INT | |
| if.2.4 | ifMtu | S | if : M | Yes | INT | |
| if.2.5 | ifSpeed | S | if : M | Yes | gauge | |
| if.2.6 | ifPhysAddress | S | if : M | Yes | PhysAddress | |
| if.2.7 | ifAdminStatus | C | if : O | Yes / No | INT | |
| if.2.8 | ifOperStatus | S | if : M | Yes | INT | |
| if.2.9 | ifLastChange | S | if : O | Yes / No | TimeTicks | |
| if.2.10 | ifInOctets | S | if : O | Yes / No | counter | |
| if.2.11 | ifInUcastPkts | S | if : O | Yes / No | counter | |
| if.2.12 | ifInNUcastPkts | S | if : O | Yes / No | counter | |
| if.2.13 | ifInDiscards | S | if : O | Yes / No | counter | |
| if.2.14 | ifInErrors | S | if : O | Yes / No | counter | |
| if.2.15 | ifInUnknownProtos | S | if : O | Yes / No | counter | |
| if.2.16 | ifOutOctets | S | if : O | Yes / No | counter | |
| if.2.17 | ifOutUcastPkts | S | if : O | Yes / No | counter | |
| if.2.18 | ifOutNUcastPkts | S | if : O | Yes / No | counter | |
| if.2.19 | ifOutDiscards | S | if : O | Yes / No | counter | |
| if.2.20 | ifOutErrors | S | if : O | Yes / No | counter | |
| if.2.21 | ifOutQLen | S | if : O | Yes / No | gauge | |

© 2023 AASHTO / ITE / NEMA Copy Per RTM Distribution Permission

| Interfaces Group | | | | | | |
|---|---|---|---|---|---|---|
| rfc 1213 | Object Name | Object Type | Object Status | Object Support | Allowed Values | Supported Values |
| if.2.22 | ifSpecific | S | if : O | Yes / No | OID | |

## I.6 IP Group

The IP Group shall consist of the following objects:

| IP GROUP | | | | | | |
|---|---|---|---|---|---|---|
| rfc 1213 | Object Name | Object Type | Object Status | Object Support | Allowed Values | Supported Values |
| ip | **IP Group** | -- | O | Yes / No | ---- | --- |
| ip.1 | ipForwarding | C | ip : M | Yes | INT | |
| ip.2 | ipDefaultTTL | C | ip : M | Yes | INT | |
| ip.3 | ipInReceives | S | ip : M | Yes | counter | |
| ip.4 | ipInHdrErrors | S | ip : M | Yes | counter | |
| ip.5 | ipInAddrErrors | S | ip : M | Yes | counter | |
| ip.6 | ipForwDatagrams | S | ip : M | Yes | counter | |
| ip.7 | ipInUnknownProtos | S | ip : M | Yes | counter | |
| ip.8 | ipInDiscards | S | ip : M | Yes | counter | |
| ip.9 | ipInDelivers | S | ip : M | Yes | counter | |
| ip.10 | ipOutRequests | S | ip : M | Yes | counter | |
| ip.11 | ipOutDiscards | S | ip : M | Yes | counter | |
| ip.12 | ipOutNoRoutes | S | ip : M | Yes | counter | |
| ip.13 | ipReasmTimeout | S | ip : M | Yes | counter | |
| ip.14 | ipReasmReqds | S | ip : M | Yes | counter | |
| ip.15 | ipReasmOKs | S | ip : M | Yes | counter | |
| ip.16 | ipReasmFails | S | ip : M | Yes | counter | |
| ip.17 | ipFragOKs | S | ip : M | Yes | counter | |
| ip.18 | ipFragFails | S | ip : M | Yes | counter | |
| ip.19 | ipFragCreates | S | ip : M | Yes | counter | |
| ip.20 | ipAddrTable | -- | ip : M | Yes | --- | |
| ip.20.1 | ipAddrEntry | -- | ip : M | Yes | --- | |
| ip.20.1.1 | ipAdEntAddr | S | ip : M | Yes | IpAddress | |
| ip.20.1.2 | ipAdEntIfIndex | S | ip : M | Yes | INT | |
| ip.20.1.3 | ipAdEntNetMask | S | ip : M | Yes | IpAddress | |
| ip.20.1.4 | ipAdEntBcastAddr | S | ip : M | Yes | INT | |
| ip.20.1.5 | ipAdEntReasmMaxSize | S | ip : M | Yes | INT | |
| ip.21 | ipRouteTable | -- | ip : M | Yes | --- | |
| ip.21.1 | ipRouteEntry | -- | ip : M | Yes | --- | |
| ip.21.1.1 | ipRouteDest | C | ip : M | Yes | IpAddress | |
| ip.21.1.2 | ipRouteIfIndex | C | ip : M | Yes | INT | |
| ip.21.1.3 | ipRouteMetric1 | C | ip : M | Yes | INT | |
| ip.21.1.4 | ipRouteMetric2 | C | ip : M | Yes | INT | |
| ip.21.1.5 | ipRouteMetric3 | C | ip : M | Yes | INT | |
| ip.21.1.6 | ipRouteMetric4 | C | ip : M | Yes | INT | |
| ip.21.1.7 | ipRouteNextHop | C | ip : M | Yes | IpAddress | |
| ip.21.1.8 | ipRouteType | C | ip : M | Yes | INT | |
| ip.21.1.9 | ipRouteProto | C | ip : M | Yes | INT | |
| ip.21.1.10 | ipRouteAge | C | ip : M | Yes | INT | |
| ip.21.1.11 | ipRouteMask | C | ip : M | Yes | IpAddress | |
| ip.21.1.12 | ipRouteMetric5 | C | ip : M | Yes | INT | |
| ip.21.1.13 | ipRouteInfo | S | ip : M | Yes | OID | |
| ip.22 | ipNetToMediaTable | -- | ip : M | Yes | --- | |
| ip.22.1 | ipNetToMediaEntry | -- | ip : M | Yes | --- | |
| ip.22.1.1 | ipNetToMediaIfIndex | C | ip : M | Yes | INT | |
| ip.22.1.2 | ipNetToMediaPhysAddress | C | ip : M | Yes | PhysAddress | |
| ip.22.1.3 | ipNetToMediaNetAddress | C | ip : M | Yes | IpAddress | |
| ip.22.1.4 | ipNetToMediaType | C | ip : M | Yes | INT | |
| ip.23 | ipRoutingDiscards | S | ip : M | Yes | counter | |


© 2023 AASHTO / ITE / NEMA

| IP GROUP | | | | | | |
|---|---|---|---|---|---|---|
| rfc 1213 | Object Name | Object Type | Object Status | Object Support | Allowed Values | Supported Values |
| | | | | | | |

## I.7 ICMP Group

The ICMP Group shall consist of the following objects:

| ICMP GROUP | | | | | | |
|---|---|---|---|---|---|---|
| rfc 1213 | Object Name | Object Type | Object Status | Object Support | Allowed Values | Supported Values |
| icmp | **ICMP Group** | -- | O | Yes / No | ---- | --- |
| icmp.1 | icmpInMsgs | S | icmp : M | Yes | counter | |
| icmp.2 | icmpInErrors | S | icmp : M | Yes | counter | |
| icmp.3 | icmpInDestUnreachs | S | icmp : M | Yes | counter | |
| icmp.4 | icmpInTimeExcds | S | icmp : M | Yes | counter | |
| icmp.5 | icmpInParmProbs | S | icmp : M | Yes | counter | |
| icmp.6 | icmpInSrcQuenchs | S | icmp : M | Yes | counter | |
| icmp.7 | icmpInRedirects | S | icmp : M | Yes | counter | |
| icmp.8 | icmpInEchos | S | icmp : M | Yes | counter | |
| icmp.9 | icmpInEchoReps | S | icmp : M | Yes | counter | |
| icmp.10 | icmpInTimestamps | S | icmp : M | Yes | counter | |
| icmp.11 | icmpInTimestampReps | S | icmp : M | Yes | counter | |
| icmp.12 | icmpInAddrMasks | S | icmp : M | Yes | counter | |
| icmp.13 | icmpInAddrMaskReps | S | icmp : M | Yes | counter | |
| icmp.14 | icmpOutMsgs | S | icmp : M | Yes | counter | |
| icmp.15 | icmpOutErrors | S | icmp : M | Yes | counter | |
| icmp.16 | icmpOutDestUnreachs | S | icmp : M | Yes | counter | |
| icmp.17 | icmpOutTimeExcds | S | icmp : M | Yes | counter | |
| icmp.18 | icmpOutParmProbs | S | icmp : M | Yes | counter | |
| icmp.19 | icmpOutSrcQuenchs | S | icmp : M | Yes | counter | |
| icmp.20 | icmpOutRedirects | S | icmp : M | Yes | counter | |
| icmp.21 | icmpOutEchos | S | icmp : M | Yes | counter | |
| icmp.22 | icmpOutEchoReps | S | icmp : M | Yes | counter | |
| icmp.23 | icmpOutTimestamps | S | icmp : M | Yes | counter | |
| icmp.24 | icmpOutTimestampReps | S | icmp : M | Yes | counter | |
| icmp.25 | icmpOutAddrMasks | S | icmp : M | Yes | counter | |
| icmp.26 | icmpOutAddrMaskReps | S | icmp : M | Yes | counter | |

## I.8 A.33 TCP Group

The TCP Group shall consist of the following objects:

| TCP GROUP | | | | | | |
|---|---|---|---|---|---|---|
| rfc 1213 | Object Name | Object Type | Object Status | Object Support | Allowed Values | Supported Values |
| tcp | **TCP Group** | -- | O | Yes / No | ---- | --- |
| tcp.1 | tcpRtoAlgorithm | S | tcp : M | Yes | INT | |
| tcp.2 | tcpRtoMin | S | tcp : M | Yes | INT | |
| tcp.3 | tcpRtoMax | S | tcp : M | Yes | INT | |
| tcp.4 | tcpMaxConn | S | tcp : M | Yes | INT | |
| tcp.5 | tcpActiveOpens | S | tcp : M | Yes | counter | |
| tcp.6 | tcpPassiveOpens | S | tcp : M | Yes | counter | |
| tcp.7 | tcpAttemptFails | S | tcp : M | Yes | counter | |
| tcp.8 | tcpEstabResets | S | tcp : M | Yes | counter | |
| tcp.9 | tcpCurrEstab | S | tcp : M | Yes | counter | |
| tcp.10 | tcpInSegs | S | tcp : M | Yes | counter | |
| tcp.11 | tcpOutSegs | S | tcp : M | Yes | counter | |
| tcp.12 | tcpRetransSegs | S | tcp : M | Yes | counter | |
| tcp.13 | tcpConnTable | -- | tcp : M | Yes | --- | |
| tcp.13.1 | tcpConnEntry | -- | tcp : M | Yes | --- | |

© 2023 AASHTO / ITE / NEMA Copy Per RTM Distribution Permission

| TCP GROUP | | | | | | |
|---|---|---|---|---|---|---|
| rfc 1213 | Object Name | Object Type | Object Status | Object Support | Allowed Values | Supported Values |
| tcp.13.1.1 | tcpConnState | C | tcp : M | Yes | INT | |
| tcp.13.1.2 | tcpConnLocalAddress | S | tcp : M | Yes | IpAddress | |
| tcp.13.1.3 | tcpConnLocalPort | S | tcp : M | Yes | INT | |
| tcp.13.1.4 | tcpConnRemAddress | S | tcp : M | Yes | IpAddress | |
| tcp.13.1.5 | tcpConnRemPort | S | tcp : M | Yes | INT | |
| tcp.14 | tcpInErrs | S | tcp : M | Yes | counter | |
| tcp.15 | tcpOutRsts | S | tcp : M | Yes | counter | |

## I.9 A.34 UDP Group

The UDP Group shall consist of the following objects:

| UDP GROUP | | | | | | |
|---|---|---|---|---|---|---|
| rfc 1213 | Object Name | Object Type | Object Status | Object Support | Allowed Values | Supported Values |
| udp | **UDP Group** | -- | O | Yes / No | ---- | --- |
| udp.1 | udpInDatagrams | S | udp : M | Yes | INT | |
| udp.2 | udpNoPorts | S | udp : M | Yes | INT | |
| udp.3 | udpInErrors | S | udp : M | Yes | INT | |
| udp.4 | udpOutDatagrams | S | udp : M | Yes | INT | |
| udp.5 | udpTable | -- | udp : M | Yes | --- | |
| udp.5.1 | udpEntry | -- | udp : M | Yes | --- | |
| udp.5.1.1 | udpLocalAddress | S | udp : M | Yes | IpAddress | |
| udp.5.1.2 | udpLocalPort | S | udp : M | Yes | INT | |
| | | | | | | |

## I.10 A.35 Ethernet Group

The Ethernet Group shall consist of the following objects:

| Ethernet Group | | | | | | |
|---|---|---|---|---|---|---|
| rfc 1643 | Object Name | Object Type | Object Status | Object Support | Allowed Values | Supported Values |
| dot3 | **Ethernet Group** | -- | O | Yes / No | ---- | --- |
| dot3.2 | dot3StatsTable | -- | dot3 : M | Yes | --- | --- |
| dot3.2.1 | dot3StatsEntry | -- | dot3 : M | Yes | --- | --- |
| dot3.2.1.1 | dot3StatsIndex | S | dot3 : M | Yes | INT | |
| dot3.2.1.2 | dot3StatsAlignmentErrors | S | dot3 : M | Yes | counter | |
| dot3.2.1.3 | dot3StatsFCSErrors | S | dot3 : M | Yes | counter | |
| dot3.2.1.4 | dot3StatsSingleCollisionFrames | S | dot3 : M | Yes | counter | |
| dot3.2.1.5 | dot3StatsMultipleCollisionFrames | S | dot3 : M | Yes | counter | |
| dot3.2.1.6 | dot3StatsSQETestErrors | S | dot3 : M | Yes | counter | |
| dot3.2.1.7 | dot3StatsDeferredTransmissions | S | dot3 : M | Yes | counter | |
| dot3.2.1.8 | dot3StatsLateCollisions | S | dot3 : M | Yes | counter | |
| dot3.2.1.9 | dot3StatsExcessiveCollisions | S | dot3 : M | Yes | counter | |
| dot3.2.1.10 | dot3StatsInternalMacTransmitErrors | S | dot3 : M | Yes | counter | |
| dot3.2.1.11 | dot3StatsCarrierSenseErrors | S | dot3 : M | Yes | counter | |
| dot3.2.1.13 | dot3StatsFrameTooLongs | S | dot3 : M | Yes | counter | |
| dot3.2.1.16 | dot3StatsInternalMacReceiveErrors | S | dot3 : M | Yes | counter | |
| dot3.2.1.17 | dot3StatsEtherChipSet | S | dot3 : M | Yes | OID | |
| dot3.5 | dot3CollTable | -- | dot3 : O | Yes / No | | |
| dot3.5.1 | dot3CollEntry | -- | dot3 : O | Yes / No | | |
| dot3.5.1.2 | dot3CollCount | S | dot3 : O | Yes / No | INT | |
| dot3.5.1.3 | dot3CollFrequencies | S | dot3 : O | Yes / No | counter | |
| dot3.6 | dot3Tests | -- | dot3 : O | Yes / No | | |
| dot3.6.1 | dot3TestTdr | S | dot3 : O | Yes / No | | |
| dot3.6.2 | dot3TestLoopBack | S | dot3 : O | Yes / No | | |
| dot3.7 | dot3Errors | -- | dot3 : O | Yes / No | | |
| dot3.7.1 | dot3ErrorInitError | S | dot3 : O | Yes / No | | |


© 2023 AASHTO / ITE / NEMA

| Ethernet Group | | | | | | |
|---|---|---|---|---|---|---|
| **rfc 1643** | **Object Name** | **Object Type** | **Object Status** | **Object Support** | **Allowed Values** | **Supported Values** |
| dot3.7.2 | dot3ErrorLoopbackError | S | dot3 : O | Yes / No | | |

§

© 2023 AASHTO / ITE / NEMA
Copy Per RTM Distribution Permission