A Joint Standard of AASHTO, ITE, and NEMA

NTCIP 1204 version v04.26b

National Transportation Communications for ITS Protocol

Environmental Sensor Station (ESS) Interface Protocol

Publish Date: April 1, 2022

Published by

American Association of State Highway and Transportation Officials (AASHTO)
444 North Capitol Street, N.W., Suite 249
Washington, D.C. 20001

Institute of Transportation Engineers (ITE)
1099 14th Street, N.W., Suite 300 West
Washington, D.C. 20005-3438

National Electrical Manufacturers Association (NEMA)
1300 North 17th Street, Suite 900
Rosslyn, Virginia 22209-3801

© 2022 National Electrical Manufacturers Association

NOTICES

Copyright Notice

© 2022 by the American Association of State Highway and Transportation Officials (AASHTO), the Institute of Transportation Engineers (ITE), and the National Electrical Manufacturers Association (NEMA). All intellectual property rights, including, but not limited to, the rights of reproduction, translation, and display are reserved under the laws of the United States of America, the Universal Copyright Convention, the Berne Convention, and the International and Pan American Copyright Conventions. Except as licensed or permitted, you may not copy these materials without prior written permission from AASHTO, ITE, or NEMA. Use of these materials does not give you any rights of ownership or claim of copyright in or to these materials.

Visit www.ntcip.org for other copyright information, for instructions to request reprints of excerpts, and to request reproduction that is not granted below.

PDF File License Agreement

To the extent that these materials are distributed by AASHTO / ITE / NEMA in the form of an Adobe® Portable Document Format (PDF) electronic data file (the “PDF file”), AASHTO / ITE / NEMA authorizes each registered PDF file user to view, download, copy, or print the PDF file available from the authorized Web site, subject to the terms and conditions of this license agreement:

a) you may download one copy of each PDF file for personal, noncommercial, and intraorganizational use only;
b) ownership of the PDF file is not transferred to you; you are licensed to use the PDF file;
c) you may make one more electronic copy of the PDF file, such as to a second hard drive or burn to a CD;
d) you agree not to copy, distribute, or transfer the PDF file from that media to any other electronic media or device;
e) you may print one paper copy of the PDF file;
f) you may make one paper reproduction of the printed copy;
g) any permitted copies of the PDF file must retain the copyright notice, and any other proprietary notices contained in the file;
h) the PDF file license does not include (1) resale of the PDF file or copies, (2) republishing the content in compendiums or anthologies, (3) publishing excerpts in commercial publications or works for hire, (4) editing or modification of the PDF file except those portions as permitted, (5) posting on network servers or distribution by electronic mail or from electronic storage devices, and (6) translation to other languages or conversion to other electronic formats;
i) other use of the PDF file and printed copy requires express, prior written consent.

Data Dictionary and MIB Distribution Permission

To the extent that these materials are distributed by AASHTO / ITE / NEMA in the form of a Data Dictionary (“DD”) or Management Information Base (“MIB”), AASHTO / ITE / NEMA extend the following permission:

You may make or distribute unlimited copies, including derivative works, of the DD or MIB, including copies for commercial distribution, provided that:

a) each copy you make or distribute includes the citation “Derived from NTCIP 0000 [insert the standard number]. Copyright by AASHTO / ITE / NEMA. Used by permission.”;
b) the copies or derivative works are not made part of the standard publications or works offered by other standard developing organizations or publishers or as works-for-hire not associated with

commercial hardware or software products intended for field implementation;

c) use of the DD or MIB is restricted in that the syntax fields may only be modified to define: 1) a more restrictive subrange; or 2) a subset of the standard enumerated values; or 3) a set of retired and defined enumerated values for systems supporting multiversion interoperability;
d) the description field may be modified but only to the extent that: 1) the more restrictive subrange is defined; and 2) only those bit values or enumerated values that are supported are listed. [from 8002 A2 v04]

These materials are delivered "AS IS" without any warranties as to their use or performance.

AASHTO / ITE / NEMA and their suppliers do not warrant the performance or results you may obtain by using these materials. AASHTO / ITE / NEMA and their suppliers make no warranties, express or implied, as to noninfringement of third party rights, merchantability, or fitness for any particular purpose. In no event will AASHTO / ITE / NEMA or their suppliers be liable to you or any third party for any claim or for any consequential, incidental or special damages, including any lost profits or lost savings, arising from your reproduction or use of these materials, even if an AASHTO / ITE / NEMA representative has been advised of the possibility of such damages.

Some states or jurisdictions do not allow the exclusion or limitation of incidental, consequential, or special damages, or the exclusion of implied warranties, so the above limitations may not apply to a given user.

Use of these materials does not constitute an endorsement or affiliation by or between AASHTO, ITE, or NEMA and the user, the user's company, or the products and services of the user's company.

If the user is unwilling to accept the foregoing restrictions, he or she should immediately return these materials.

PRL and RTM Distribution Permission

To the extent that these materials are distributed by AASHTO / ITE / NEMA in the form of a Profile Requirements List ("PRL") or a Requirements Traceability Matrix ("RTM"), AASHTO / ITE / NEMA extend the following permission:

a) you may make or distribute unlimited copies, including derivative works of the PRL (then known as a Profile Implementation Conformance Statement ("PICS")) or the RTM, provided that each copy you make or distribute contains the citation "Based on NTCIP 0000 [insert the standard number] PRL or RTM. Used by permission. Original text © AASHTO / ITE / NEMA.";
b) you may only modify the PRL or the RTM by adding: 1) text in the Project Requirements column, which is the only column that may be modified to show a product's implementation or the project-specific requirements; and/or 2) additional table columns or table rows that are clearly labeled as ADDITIONAL for project-unique or vendor-unique features; and
c) if the PRL or RTM excerpt is made from an unapproved draft, add to the citation "PRL (or RTM) excerpted from a draft standard containing preliminary information that is subject to change."

This limited permission does not include reuse in works offered by other standards developing organizations or publishers, and does not include reuse in works-for-hire, compendiums, or electronic storage devices that are not associated with procurement documents, or commercial hardware, or commercial software products intended for field installation.

A PICS is a Profile Requirements List which is completed to indicate the features that are supported in an implementation. Visit www.ntcip.org for information on electronic copies of the MIBs, PRLs, and RTMs.

© 2022 National Electrical Manufacturers Association

TRF Distribution Permission

A Testing Requirements Form ("TRF") may be a Testing Requirements Traceability Table and/or Test Procedures. To the extent that these materials are distributed by AASHTO / ITE / NEMA in the form of a TRF, AASHTO / ITE / NEMA extend the following permission:

a) you may make and/or distribute unlimited electronic or hard copies, including derivative works of the TRF, provided that each copy you make and/or distribute contains the citation "Based on NTCIP 0000 [insert the standard number] TRF. Used by permission. Original text © AASHTO / ITE / NEMA.";
b) you may not modify the logical flow of any test procedure, without clearly noting and marking any such modification; and
c) if the TRF excerpt is made from an unapproved draft, add to the citation "TRF excerpted from a draft standard containing preliminary information that is subject to change."

Content and Liability Disclaimer

The information in this publication was considered technically sound by the consensus of persons engaged in the development and approval of the document at the time it was developed. Consensus does not necessarily mean that there is unanimous agreement among every person participating in the development of this document.

AASHTO, ITE, and NEMA standards and guideline publications, of which the document contained herein is one, are developed through a voluntary consensus standards development process. This process brings together volunteers and seeks out the views of persons who have an interest in the topic covered by this publication. While AASHTO, ITE, and NEMA administer the process and establish rules to promote fairness in the development of consensus, they do not write the document and they do not independently test, evaluate, or verify the accuracy or completeness of any information or the soundness of any judgments contained in their standards and guideline publications.

AASHTO, ITE, and NEMA disclaim liability for any personal injury, property, or other damages of any nature whatsoever, whether special, indirect, consequential, or compensatory, directly or indirectly resulting from the publication, use of, application, or reliance on this document. AASHTO, ITE, and NEMA disclaim and make no guaranty or warranty, express or implied, as to the accuracy or completeness of any information published herein, and disclaims and makes no warranty that the information in this document will fulfill any of your particular purposes or needs. AASHTO, ITE, and NEMA do not undertake to guarantee the performance of any individual manufacturer or seller's products or services by virtue of this standard or guide.

In publishing and making this document available, AASHTO, ITE, and NEMA are not undertaking to render professional or other services for or on behalf of any person or entity, nor are AASHTO, ITE, and NEMA undertaking to perform any duty owed by any person or entity to someone else. Anyone using this document should rely on his or her own independent judgment or, as appropriate, seek the advice of a competent professional in determining the exercise of reasonable care in any given circumstances. Information and other standards on the topic covered by this publication may be available from other sources, which the user may wish to consult for additional views or information not covered by this publication.

AASHTO, ITE, and NEMA have no power, nor do they undertake to police or enforce compliance with the contents of this document. AASHTO, ITE, and NEMA do not certify, test, or inspect products, designs, or installations for safety or health purposes. Any certification or other statement of compliance with any health or safety-related information in this document shall not be attributable to AASHTO, ITE, or NEMA and is solely the responsibility of the certifier or maker of the statement.

© 2022 National Electrical Manufacturers Association

Trademark Notice

NTCIP is a trademark of AASHTO / ITE / NEMA. All other marks mentioned in this standard are the trademarks of their respective owners.

© 2022 National Electrical Manufacturers Association

< This page is intentionally left blank. >

© 2022 National Electrical Manufacturers Association

ACKNOWLEDGEMENTS

NTCIP 1204 v04 was prepared by the NTCIP Environmental Sensor Station Working Group (ESS WG), which is a subdivision of the Joint Committee on the NTCIP. The Joint Committee is organized under a Memorandum of Understanding among the American Association of State Highway and Transportation Officials (AASHTO), the Institute of Transportation Engineers (ITE), and the National Electrical Manufacturers Association (NEMA). The Joint Committee on the NTCIP consists of six representatives from each of the standards organizations, and provides guidance for NTCIP development.

When NTCIP 1204 v04 was prepared, the following individuals were voting members of the NTCIP ESS WG:

- Joerg (Nu) Rosenbohm (Co-Chair)
- Kevin Balke
- Liang Hsia
- Brett Hansen
- John Markham
- Curt Pape
- Kenneth Vaughn
- John Spence

When NTCIP 1204 v04 was prepared, the following individuals were Observing members of the NTCIP ESS WG:

- Russell Allen
- Alan Clelland
- Ron Meyer
- Rose Mooney
- Edward Seymour
- John Stenz

When NTCIP 1204 v04 was prepared, the following individuals were additional stakeholders of the NTCIP ESS WG:

- Ralph Boaz
- Russ Brookshire
- Patrick Chan
- Eric Cottone
- Doug Crawford
- James Daley
- Scott Evans
- Michael Forbis
- Greg Fuller
- Tina Greenfield
- Manny Insignares
- Dale Kirmer
- Patrick Klos
- Joseph Knapka
- Michael Lashmet
- Robert Lopes
- Amit Misra
- Greg Mizell
- Mark Morse
- Alexis Mousadi
- Bryan Mulligan
- Robert Rausch
- Douglas Tarico
- John Thai
- Jeffrey Thorn
- Thomas Timcho
- Keith Vennel

In addition to the many volunteer efforts, recognition is also given to those organizations that supported the effort by providing comments and funding, including:
[To be revised as NTCIP 1204 v04 development proceeds.]

- U.S. Department of Transportation
- AASHTO
- AECom Corp., Alexis Mousadi
- Applied Information, Inc.
- Booz, Allan

© 2022 AASHTO / ITE / NEMA Do Not Copy Without Written Permission

- Boschung America
- Campbell Scientific
- City of Anaheim
- Consensus Systems Technologies
- Eberle Design, Inc.
- Econolite Control Products, Inc.
- FDOT TERL
- Florida DOT, NW 126
- Force America, Inc.
- High Sierra Electronics, Inc.
- IA DOT
- Intelight Inc.
- ITE
- Iteris
- Kapsch
- Klos Technologies, Inc.
- KS DOT
- McCain Inc.
- Minnesota DOT
- NEMA
- Noblis
- North Carolina Department of Transportation
- NY State DOT
- Parsons
- Pillar Consulting
- RCC Consultants, Inc.
- Sciovid Inc.
- Southwest Research Institute
- Texas A&M University
- Texas Transportation Institute
- TransCore ITS Inc.
- TransCore, ITS, LLC
- Trevilon Corp.
- Vaisala
- Vaisala
- WA State DOT, MS-25
- Washington State DOT
- WSDOT, SC Region
- WSP

Do Not Copy Without Written Permission © 2022 AASHTO / ITE / NEMA

FOREWORD

NTCIP 1204 v04, an NTCIP standards publication, identifies and defines how a management station may wish to interface with a field device to control and monitor pavement sensors, weather stations, air quality sensors, and other equipment related to the monitoring of and response to environmental conditions in an NTCIP-conformant fashion. NTCIP 1204 v04 uses only metric units.

NTCIP 1204 v04 is titled *Environmental Sensor Station (ESS) Interface Protocol* to express the multiple sections and annexes that are included in this standards publication. This NTCIP 1200-series standards publication has grown beyond the “object definitions” that were reflected in the title for the NTCIP 1204 versions v01, v02 and v03.

NTCIP 1204 v04 provides definitions of data elements for environmental sensor data, including weather data, pavement condition data, water level data, and air quality data. The data is defined using the Simple Network Management Protocol (SNMP) object-type format as defined in RFC 1212 and NTCIP format defined in NTCIP 8004 v02. This data is typically exchanged between a management station and a field device using one of the NTCIP 1103 v03-recognized Application Layers (e.g., SNMP). The data may also be exchanged among management stations using other protocols.

NTCIP 1204 v04 defines requirements that are applicable to all NTCIP environments and it also contains optional and conditional sections that are applicable to specific environments for which they are intended.

The following keywords apply to NTCIP 1204 v04: AASHTO, ITE, NEMA, NTCIP, ESS, data, data dictionary, object, environmental sensor.

NTCIP 1204 v04 contains four normative and four informative annexes:

a) Annex A is normative and contains a Requirements Traceability Matrix (RTM) that traces requirements to dialogs and data concepts (messages, data frames, and data elements) used to fulfill one or more requirements.
b) Annex B is informative and provides a graphical representation of the major nodes of the ISO tree as defined by NTCIP 1204 v04.
c) Annex C is normative and defines the test procedures for NTCIP 1204 v04.
d) Annex D is informative and identifies the significant revisions in NTCIP 1204 v04 that have been made since previous versions of NTCIP 1204 v04.
e) Annex E is informative and responds to user requests by providing an explanation as to how certain complex features can be supported by NTCIP 1204 v04 and why certain other features are not supported by NTCIP 1204 v04.
f) Annex F is informative and provides sample encodings of block objects.
g) Annex G is normative and contains the definitions for the Generic SNMP interface including the definitions to perform GET, SET, GET NEXT commands. These definitions may be moved to a different NTCIP standard at a future date, because this content is applicable to all device-specific NTCIP standards.
h) Annex H is normative and serves as a placeholder for systems engineering descriptions that may be moved to a different NTCIP standard at a future date, because this content is applicable to all device-specific NTCIP standards.

NTCIP 1204 v04 is also an NTCIP Data Dictionary standard. Data Dictionary standards provide definitions of data concepts (messages, data frames, and data elements) for use within NTCIP systems; they are approved by AASHTO, ITE, and NEMA through a ballot process, after a recommendation by the NTCIP Joint Committee. For more information about NTCIP standards, visit www.ntcip.org.

© 2022 AASHTO / ITE / NEMA Do Not Copy Without Written Permission

User Comment Instructions

The term “User Comment” includes any type of written inquiry, comment, question, or proposed revision, from an individual person or organization, about any part of this standards publication’s content. A “Request for Interpretation” is also classified as a User Comment. User Comments are solicited at any time. In preparation of this NTCIP standards publication, input of users and other interested parties was sought and evaluated.

All User Comments are referred to the committee responsible for developing and/or maintaining this standards publication. The committee chairperson, or their designee, may contact the submitter for clarification of the User Comment. When the committee chairperson or designee reports the committee’s consensus opinion related to the User Comment, that opinion is forwarded to the submitter. The committee chairperson may report that action on the User Comment may be deferred to a future committee meeting and/or a future revision of the standards publication. Previous User Comments and their disposition may be available for reference and information at www.ntcip.org.

A User Comment should be submitted to this address:

NTCIP Coordinator
National Electrical Manufacturers Association
1300 North 17th Street, Suite 900
Rosslyn, Virginia 22209-3801
e-mail: ntcip@nema.org

A User Comment should be submitted in the following form:

Standard Publication number and version:
Page:
Section, Paragraph, or Clause:
Comment:
Editorial or Substantive?:
Suggested Alternative Language:

Please include your name, organization, and address in your correspondence.

Approvals

NTCIP 1204 v04 was separately balloted and approved by AASHTO, ITE, and NEMA after recommendation by the Joint Committee on the NTCIP. Each organization has approved NTCIP 1204 v04 as the following standard type, as of the date:

AASHTO—Standard Specification;
ITE—Software Standard;
NEMA—Standard;

History

In 1992, the NEMA 3-TS Transportation Management Systems and Associated Control Devices Section began development of the NTCIP. The Transportation Section’s purpose was in response to user needs to include standardized systems communication in the NEMA TS 2 standard, *Traffic Controller Assemblies*. Under the guidance of the Federal Highway Administration’s NTCIP Steering Group, the NEMA effort was expanded to include the development of communications standards for all transportation field devices that could be used in an Intelligent Transportation Systems (ITS) network.

Do Not Copy Without Written Permission © 2022 AASHTO / ITE / NEMA

In September 1996, an agreement was executed among AASHTO, ITE, and NEMA to jointly develop, approve, and maintain the NTCIP standards. Under the guidance of a Joint AASHTO/ITE/NEMA Committee on the NTCIP, a Working Group was created to develop the object definitions for Environmental Sensor Stations. The first meeting of this working group was in November 1996, and the 1204 version 01 was produced in 1998. In 2001, efforts began to update and enhance the standard, which resulted in version 02, produced in 2005. In 2006, efforts began to update and enhance the standard with test procedures, which resulted in NTCIP 1204 v03, produced in 2009.

NTCIP 1204 version 01 (v01) was published as NTCIP 1204:1998 and was also formerly known as NEMA TS 3.7. NTCIP 1204 v02 was developed to reflect lessons learned, to update to new documentation formats, and to add new features such as the control of automated de-icing equipment. NTCIP 1204 v03 was developed to add test procedures (Annex C) and to correct issues that had been identified with NTCIP 1204 v02. NTCIP 1204 v04 was developed to reflect lessons learned since publication of NTCIP 1204 v03 and to support newly identified user needs.

Compatibility of Versions

To distinguish NTCIP 1204 v04 (as published) from previous drafts, NTCIP 1204 v04 also includes NTCIP 1204 v04.XX on each page header. All NTCIP Standards Publications have a major and minor version number for configuration management. The version number syntax is "v00.00a," with the major version number before the period, and the minor version number and edition letter (if any) after the period.

NTCIP 1204 v04 is designated, and should be cited as, NTCIP 1204 v04. Anyone using NTCIP 1204 v04 should seek information about the version number that is of interest to them in any given circumstance. The MIB, the PRL, and the PICS should all reference the version number of the standards publication that was the source of the excerpted material.

Compliant systems based on later, or higher, version numbers MAY NOT be compatible with compliant systems based on earlier, or lower, version numbers. Anyone using NTCIP 1204 v04 should also consult NTCIP 8004 v02 for specific guidelines on compatibility.

© 2022 AASHTO / ITE / NEMA Do Not Copy Without Written Permission

< This page is intentionally left blank. >

Do Not Copy Without Written Permission © 2022 AASHTO / ITE / NEMA

CONTENTS

Page

Section 1 General [Informative] 1

1.1 Scope 1
1.2 References 2
1.2.1 Normative References 2
1.2.2 Other References 2
1.2.3 Contact Information 3
1.3 General Statements 5
1.4 Terms 5
1.5 Abbreviations 8

Section 2 Concept of Operations [Normative] 10

2.1 Tutorial [Informative] 10
2.2 Current Situation and Problem Statement [Informative] 11
2.3 Reference Physical Architecture [Informative] 13
2.3.1 Remote Weather Station 15
2.3.2 Air Quality Station 15
2.3.3 Mobile Weather Station 15
2.3.4 Sprayer Combined with a Pavement Sensor 15
2.3.5 Pavement Treatment Station 16
2.4 Architectural Needs 16
2.4.1 Generic Architectural Needs 17
2.5 Features 17
2.5.1 ESS Manager Features 17
2.5.2 Sensor Manager Features 18
2.5.3 Pavement Treatment System Manager Features 20
2.5.4 Backward Compatibility Needs 21
2.6 Security 21
2.7 Relationship to the ITS National Architecture [Informative] 21

Section 3 Functional Requirements [Normative] 24

3.1 Tutorial [Informative] 24
3.2 Scope of the Interface [Informative] 25
3.3 Protocol Requirements List (PRL) 25
3.3.1 Notation [Informative] 25
3.3.2 Instructions for Completing the PRL [Informative] 27
3.3.3 Protocol Requirements List (PRL) Table 28
3.4 Architectural Requirements 49
3.5 Data Exchange and Operational Environment Requirements 49
3.5.1 ESS Manager Requirements 49
3.5.2 Sensor Manager Requirements 51
3.5.3 PTS Manager Requirements 73
3.5.4 Backward Compatibility Requirements 76
3.6 Supplemental Non-Communications Requirements 79
3.6.1 Required Number of Atmospheric Pressure Sensors 79
3.6.2 Required Number of Wind Sensors 80
3.6.3 Required Number of Temperature Sensors 80
3.6.4 Required Number of Humidity Sensors 80

© 2022 AASHTO / ITE / NEMA Do Not Copy Without Written Permission

3.6.5 Required Number of Precipitation Sensors ... 80
3.6.6 Required Number of Solar Radiation Sensors ... 80
3.6.7 Required Number of Visibility Sensors ... 80
3.6.8 Required Number of Pavement Sensors ... 80
3.6.9 Active Pavement Treatment Sensors ... 80
3.6.10 Passive Pavement Treatment Sensors ... 80
3.6.11 Required Number of Subsurface Sensors ... 81
3.6.12 Required Number of Pavement Treatment Products ... 81
3.6.13 Required Number of Carbon Monoxide Sensors ... 81
3.6.14 Required Number of Carbon Dioxide Sensors ... 81
3.6.15 Required Number of Nitric Oxide Sensors ... 81
3.6.16 Required Number of Nitrogen Dioxide Sensors ... 81
3.6.17 Required Number of Sulfur Dioxide Sensors ... 81
3.6.18 Required Number of Ozone Sensors ... 82
3.6.19 Required Number of Small Particulate Matter Sensors ... 82
3.6.20 Required Number of Snapshot Cameras ... 82
3.6.21 Maximum Response Time for Requests ... 82
3.6.22 Required Number of Water Level Sensors ... 82
3.6.23 Support Camera Number in Filename ... 82
3.6.24 Support Sequence Number in Filename ... 82
3.6.25 Support Date in Filename ... 82
3.6.26 Support Time in Filename ... 82
3.6.27 Support Long Filenames ... 83
3.6.28 Required Number of Small Particulate Matter (2.5) Sensors ... 83
3.6.29 Maximum Transmission Start Time ... 83

Section 4 Dialogs [Normative] ... 84

4.1 Tutorial [Informative] ... 85
4.2 Specified Dialogs ... 85
4.2.1 Capture Snapshot Image ... 85
4.2.2 Retrieve Snapshot ... 86
4.2.3 Delete Snapshot ... 86
4.2.4 Copy Snapshot—Deprecated in v03 ... 87
4.2.5 Retrieve Stationary Pavement Treatment Configuration ... 87
4.2.6 Retrieve Icing Conditions—Passive ... 87
4.2.7 Configure Stationary Pavement Treatment System ... 88
4.2.8 Configure Passive Ice Detection Logic ... 88
4.2.9 Configure Mobile Pavement Treatment System ... 88
4.2.10 Configure Snapshot Camera ... 89
4.2.11 Retrieve Snapshot Camera Configuration ... 89
4.2.12 Retrieve Precipitation Presence [Versions 01 to 03] ... 89
4.2.13 Retrieve Solar Radiation [Versions 01 to 03] ... 90
4.2.14 Retrieve Pavement Surface Condition ... 90
4.2.15 Retrieve Icing Conditions—Active ... 90
4.2.16 Retrieve Precipitation Presence ... 90
4.2.17 Retrieve Solar Radiation ... 91
4.2.18 Retrieve Mobile Pavement Treatment System ... 91
4.2.19 Retrieve Pavement Treatment Profile ... 91
4.2.20 Retrieve Sensor Profile for Mobile Platforms ... 92
4.3 State Transition Diagrams ... 93
4.3.1 Pavement Treatment System State Transition Diagram ... 93
4.4 Class Diagrams ... 95
4.4.1 ESS Characteristics ... 96
4.4.2 Pressure Sensor ... 97
4.4.3 Wind Data ... 98

 © 2022 AASHTO / ITE / NEMA

4.4.4 Temperature 99
4.4.5 Precipitation 99
4.4.6 Radiation 103
4.4.7 Visibility 104
4.4.8 Pavement Sensor Data 105
4.4.9 Subsurface Data 106
4.4.10 Air Quality Data 107
4.4.11 Snapshot Data 109
4.4.12 Pavement Treatment System 110

Section 5 Management Information Base (MIB) [Normative] 112

5.1 MIB Header 112
5.2 Identification Objects 113
5.2.1 Station Category 113
5.2.2 Site Description 113
5.3 Data Instrumentation Objects 113
5.3.1 Type of Station 114
5.3.2 Door Status 114
5.3.3 Battery Status 114
5.3.4 Line Volts 115
5.3.5 Station Meta Data Block 115
5.3.6 Weather Block 116
5.3.7 Mobile Block 118
5.3.8 Station Meta Data Block Version 3 118
5.3.9 Weather Block Version 3 119
5.3.10 ESS Status 121
5.4 Location Objects 121
5.4.1 Latitude 121
5.4.2 Longitude 122
5.4.3 Vehicle Speed 122
5.4.4 Vehicle Bearing 122
5.4.5 Odometer 123
5.5 Station Elevation Objects 123
5.5.1 Reference Height 123
5.5.2 Pressure Height 123
5.5.3 Wind Sensor Height 124
5.5.4 Atmospheric Pressure 124
5.5.5 Number of Pressure Sensors 124
5.5.6 Pressure Sensor Table 125
5.5.7 Pressure Sensor 125
5.6 Wind Data Section 128
5.6.1 Average Wind Direction 128
5.6.2 Average Wind Speed 128
5.6.3 Spot Wind Direction 128
5.6.4 Spot Wind Speed 129
5.6.5 Wind Situation 129
5.6.6 Wind Gust Speed 130
5.6.7 Wind Gust Direction 130
5.6.8 Number of Wind Sensors 130
5.6.9 Wind Sensor Table 130
5.6.10 Wind Sensor 131
5.7 Temperature Data Objects 136
5.7.1 Number of Temperature Sensors 136
5.7.2 Temperature Sensor Table 136

© 2022 AASHTO / ITE / NEMA Do Not Copy Without Written Permission

5.7.3 Temperature Sensor 136
5.7.4 Wetbulb Temperature 139
5.7.5 Dewpoint Temperature 139
5.7.6 Maximum Temperature 140
5.7.7 Minimum Temperature 140
5.8 Humidity and Precipitation Data Objects 140
5.8.1 Relative Humidity 141
5.8.2 Water Depth 141
5.8.3 Adjacent Snow Depth 141
5.8.4 Roadway Snow Depth 141
5.8.5 Roadway Snow Pack Depth 142
5.8.6 Precipitation Indicator 142
5.8.7 Rainfall or Water Equivalent of Snow 142
5.8.8 Snowfall Accumulation Rate 143
5.8.9 Precipitation Situation 143
5.8.10 Ice Deposit (Thickness) 144
5.8.11 Precipitation Start Time 144
5.8.12 Precipitation End Time 145
5.8.13 Total Precipitation Past One Hour 145
5.8.14 Total Precipitation Past Three Hours 145
5.8.15 Total Precipitation Past Six Hours 146
5.8.16 Total Precipitation Past Twelve Hours 146
5.8.17 Total Precipitation Past Twenty-Four Hours 146
5.8.18 Precipitation Sensor Model Information 147
5.8.19 Number of Water Level Sensors 147
5.8.20 Water Level Sensor Table 147
5.8.21 Water Level Sensor 148
5.8.22 Number of Precipitation Sensors 151
5.8.23 Precipitation Sensor Table 151
5.8.24 Precipitation Sensor 151
5.8.25 Number of Humidity Sensors 160
5.8.26 Humidity Sensor Table 160
5.8.27 Humidity Sensor 160
5.9 Radiation Objects 164
5.9.1 Solar Radiation 164
5.9.2 Total Sun 164
5.9.3 Cloud Cover Situation 165
5.9.4 Terrestrial Radiation 165
5.9.5 Solar Radiation—Version 2 165
5.9.6 Total Radiation 166
5.9.7 Total Radiation Period 166
5.9.8 Number of Radiation Sensors 166
5.9.9 Radiation Sensor Table 167
5.9.10 Radiation Sensor 167
5.9.11 Cloud Cover Situation V4 170
5.10 Visibility Data Objects 171
5.10.1 Visibility 171
5.10.2 Visibility Situation 171
5.10.3 Visibility Sensor Height 172
5.10.4 Visibility Sensor Latitude 172
5.10.5 Visibility Sensor Longitude 173
5.10.6 Visibility Sensor Location 173
5.10.7 Visibility Sensor Model Information 173
5.11 Pavement Sensor Objects 173
5.11.1 Number of Pavement Sensors 174

 © 2022 AASHTO / ITE / NEMA

5.11.2 Pavement Sensor Table 174
5.11.3 Pavement Sensor 174
5.11.4 Number of Subsurface Sensors 185
5.11.5 Subsurface Sensor Table 186
5.11.6 Subsurface Sensor 186
5.11.7 Pavement Block 189
5.11.8 Subsurface Block Object 190
5.11.9 Pavement Block V3 191
5.12 Mobile Platform Objects 191
5.12.1 Detected Friction 192
5.12.2 Observed Ground State 192
5.12.3 Observed Pavement State 192
5.12.4 Observed Ground State - Version 4 193
5.12.5 Observed Pavement State - Version 4 194
5.13 Pavement Treatment Objects 195
5.13.1 Number of Treatments 195
5.13.2 Pavement Treatment Table 195
5.13.3 Pavement Treatment 195
5.13.4 Treatment Amount 197
5.13.5 Treatment Width 198
5.13.6 Pavement Treatment Block 198
5.13.7 Operational Mode [Obsolete] 199
5.13.8 Command State [Obsolete] 200
5.13.9 Sprayer State 200
5.13.10 Signal Duration 200
5.13.11 Signal Event Count 201
5.13.12 Last Signal Event 201
5.13.13 Active Event Count 201
5.13.14 Inactive Event Count 201
5.13.15 Last Active Event 202
5.13.16 Last Inactive Event 202
5.13.17 PTS Error Code 202
5.13.18 Monitoring Detectors 202
5.13.19 Operational Mode—Version 3 203
5.13.20 Command State—Version 3 204
5.13.21 PTS Latitude 204
5.13.22 PTS Longitude 204
5.13.23 PTS Location 205
5.13.24 PTS Model Information 205
5.14 Air Quality Parameters 205
5.14.1 Carbon Monoxide Parameter 205
5.14.2 Carbon Dioxide Parameter 206
5.14.3 Nitrous Oxide Parameter 206
5.14.4 Nitrogen Dioxide Parameter 206
5.14.5 Sulfur Dioxide Parameter 207
5.14.6 Ozone Parameter 207
5.14.7 Particulate Matter Parameter 207
5.14.8 Air Quality Block Object 208
5.14.9 Particulate Matter (2.5) Parameter 208
5.14.10 Number of Air Quality Sensors 208
5.14.11 Air Quality Sensor Table 209
5.14.12 Air Quality Sensor 209
5.14.13 Carbon Dioxide Version 4 Parameter 211
5.14.14 Nitric Oxide Version 4 Parameter 211
5.14.15 Ozone Version 4 Parameter 212

© 2022 AASHTO / ITE / NEMA Do Not Copy Without Written Permission

5.15 Water Quality Parameters 212
5.16 Snapshot Parameters 212
5.16.1 Number of Snapshot Cameras 212
5.16.2 Snapshot Camera Table 212
5.16.3 Snapshot Camera 213
5.17 Snapshot 216
5.17.1 Filename [Deprecated in v04] 216
5.17.2 Image [Deprecated in v04] 216

Annex A Requirements Traceability Matrix (RTM) [Normative] 217

A.1 Notation [Informative] 217
A.1.1 Functional Requirement Columns 217
A.1.2 Dialog Column 217
A.1.3 Object Columns 218
A.1.4 Additional Specifications 218
A.2 Instructions for Completing the RTM [Informative] 218
A.3 Requirements Traceability Matrix (RTM) Table 218

Annex B Object Tree [Informative] 268

Annex C Test Procedures [Normative] 269

C.1 Purpose 269
C.1.1 Scope 269
C.1.2 Keywords 269
C.1.2.1 Additional Keywords 269
C.1.2.2 Keyword Combinations 269
C.1.3 Rules for Following Test Procedures 270
C.2 Testing Requirements 270
C.2.1 Field Device Test Environment 270
C.2.2 Traceability Table 270
C.2.3 Test Procedures 286
C.2.3.1 ESS Manager Tests 286
C.2.3.1.1 ESS Characteristics 286
C.2.3.1.2 Retrieve Compressed Station Metadata 289
C.2.3.1.3 Retrieve ESS Door Status 294
C.2.3.1.4 Retrieve Battery Status 295
C.2.3.1.5 Retrieve Line Volts 296
C.2.3.1.6 Retrieve Mobile ESS Movement 297
C.2.3.1.7 Retrieve Compressed Mobile Station Data 299
C.2.3.1.8 Retrieve ESS Status 302
C.2.3.2 Weather Metadata Tests 304
C.2.3.2.1 Retrieve Atmospheric Pressure Height [Versions 01 to 03] 304
C.2.3.2.2 Retrieve Metadata for Each Wind Sensor 305
C.2.3.2.3 Retrieve Temperature Sensor Metadata 306
C.2.3.2.4 Retrieve Pavement Sensor Metadata 307
C.2.3.2.5 Retrieve Subsurface Sensor Metadata 309
C.2.3.2.6 Configure Pavement Sensor 311
C.2.3.2.7 Configure Subsurface Sensor 313
C.2.3.2.8 Configure Passive Ice Detection Logic 315
C.2.3.2.9 Configure Snapshot Camera 317
C.2.3.2.10 Retrieve Atmospheric Pressure Metadata - Location 319
C.2.3.2.11 Retrieve Atmospheric Pressure Metadata - Sensor Information 322
C.2.3.2.12 Configure Atmospheric Pressure Metadata - Location 323
C.2.3.2.13 Retrieve Wind Sensor Metadata - Location 325
C.2.3.2.14 Retrieve Wind Sensor Metadata – Sensor Information 326

 © 2022 AASHTO / ITE / NEMA

C.2.3.2.15 Configure Wind Sensor Metadata - Location 327
C.2.3.2.16 Retrieve Temperature Sensor Metadata - Location 328
C.2.3.2.17 Retrieve Temperature Sensor Metadata – Sensor Information 331
C.2.3.2.18 Configure Temperature Sensor Metadata - Location 332
C.2.3.2.19 Retrieve Humidity Sensor Metadata - Location 334
C.2.3.2.20 Retrieve Humidity Sensor Metadata - Sensor Information 336
C.2.3.2.21 Configure Humidity Sensor Metadata - Location 337
C.2.3.2.22 Retrieve Precipitation Sensor Metadata – Location 339
C.2.3.2.23 Retrieve Precipitation Sensor Metadata - Sensor Information 341
C.2.3.2.24 Configure Precipitation Sensor Metadata - Location 342
C.2.3.2.25 Configure Precipitation Sensor Total User Specified Period 344
C.2.3.2.26 Retrieve Solar Radiation Sensor Metadata - Location 346
C.2.3.2.27 Retrieve Solar Radiation Sensor Metadata - Sensor Information 348
C.2.3.2.28 Configure Solar Radiation Sensor Metadata - Location 349
C.2.3.2.29 Retrieve Visibility Sensor Metadata - Location 351
C.2.3.2.30 Retrieve Visibility Sensor Metadata - Sensor Information 352
C.2.3.2.31 Configure Visibility Sensor Metadata - Location 353
C.2.3.2.32 Retrieve Pavement Sensor Metadata - Location 355
C.2.3.2.33 Retrieve Pavement Sensor Metadata - Sensor Information 357
C.2.3.2.34 Configure Pavement Sensor Metadata - Location 358
C.2.3.2.35 Retrieve SubSurface Sensor Metadata - Location 361
C.2.3.2.36 Retrieve SubSurface Sensor Metadata - Sensor Information 363
C.2.3.2.37 Configure SubSurface Sensor Metadata - Location 364
C.2.3.2.38 Retrieve Air Quality Sensor Metadata - Location 366
C.2.3.2.39 Retrieve Air Quality Sensor Metadata - Sensor Information 368
C.2.3.2.40 Configure Air Quality Sensor Metadata - Location 369
C.2.3.2.41 Retrieve Water Level Sensor Metadata - Location 371
C.2.3.2.42 Retrieve Water Level Sensor Metadata - Sensor Information 373
C.2.3.2.43 Retrieve Water Level Sensor Metadata - Warning Level 374
C.2.3.2.44 Configure Water Level Sensor Metadata - Location 375
C.2.3.2.45 Configure Water Level Sensor Metadata - Warning Level 377
C.2.3.2.46 Retrieve PTS Metadata - Location 379
C.2.3.2.47 Retrieve PTS Metadata - Sensor Information 380
C.2.3.2.48 Configure PTS Metadata - Location 381
C.2.3.3 Weather Data Tests 383
C.2.3.3.1 Retrieve Weather Profile with Mobile Sources 383
C.2.3.3.2 Retrieve Atmospheric Pressure [Versions 01 to 03] 393
C.2.3.3.3 Retrieve Wind Data 394
C.2.3.3.4 Retrieve Temperature 396
C.2.3.3.5 Retrieve Daily Minimum and Maximum Temperature 397
C.2.3.3.6 Retrieve Humidity [Versions 01 to 03] 398
C.2.3.3.7 Retrieve Precipitation Presence [Versions 01 to 03] 399
C.2.3.3.8 Retrieve Precipitation Rates [Versions 01 to 03] 401
C.2.3.3.9 Retrieve Precipitation Totals [Versions 01 to 03] 402
C.2.3.3.10 Retrieve Solar Radiation [Versions 01 to 03] 404
C.2.3.3.11 Retrieve Visibility 406
C.2.3.3.12 Retrieve Compressed Weather Data 407
C.2.3.3.13 Retrieve Precipitation Presence 416
C.2.3.3.14 Retrieve Precipitation Rates 418
C.2.3.3.15 Retrieve Precipitation Totals 420
C.2.3.3.16 Retrieve Precipitation Totals – User Specified 422
C.2.3.3.17 Retrieve Atmospheric Pressure 423
C.2.3.3.18 Retrieve Relative Humidity Sensor 424
C.2.3.3.19 Retrieve Solar Radiation 426
C.2.3.4 Pavement Tests 428
C.2.3.4.1 Retrieve Pavement Surface Condition [Versions 01 to 03] 428

© 2022 AASHTO / ITE / NEMA Do Not Copy Without Written Permission

C.2.3.4.2 Retrieve Icing Conditions—Active 430
C.2.3.4.3 Retrieve Icing Conditions—Passive 432
C.2.3.4.4 Retrieve Adjacent Snow Depth [Versions 01 to 03] 435
C.2.3.4.5 Retrieve Roadway Snow Depth [Versions 01 to 03] 436
C.2.3.4.6 Retrieve Roadway Ice Thickness [Versions 01 to 03] 437
C.2.3.4.7 Retrieve Compressed Pavement Condition Data 438
C.2.3.4.8 Retrieve Basic Subsurface Conditions 441
C.2.3.4.9 Retrieve Subsurface Moisture 442
C.2.3.4.10 Retrieve Compressed Subsurface Condition Data 443
C.2.3.4.11 Retrieve Pavement Surface Condition 445
C.2.3.4.12 Retrieve Forecasted Pavement Surface Condition 447
C.2.3.4.13 Retrieve Roadway Friction Coefficient 448
C.2.3.4.14 Retrieve Adjacent Snow Depth 449
C.2.3.4.15 Retrieve Roadway Snow Depth 450
C.2.3.4.16 Retrieve Roadway Ice Thickness 451
C.2.3.5 Situation Tests 452
C.2.3.5.1 Retrieve Wind Situation 452
C.2.3.5.2 Retrieve Precipitation Situation 453
C.2.3.5.3 Retrieve Cloud Situation [Versions 01 to 03] 454
C.2.3.5.4 Retrieve Visibility Situation 455
C.2.3.5.5 Retrieve Ground State [Versions 01 to 03] 456
C.2.3.5.6 Retrieve Pavement State [Versions 01 to 03] 457
C.2.3.5.7 Retrieve Cloud Situation 458
C.2.3.5.8 Retrieve Ground State 459
C.2.3.5.9 Retrieve Pavement State 460
C.2.3.6 Air Quality Tests 461
C.2.3.6.1 Retrieve Carbon Monoxide Reading 461
C.2.3.6.2 Retrieve Carbon Dioxide Reading [Versions 01 to 03] 462
C.2.3.6.3 Retrieve Nitric Oxide Reading [Versions 01 to 03] 463
C.2.3.6.4 Retrieve Nitrogen Dioxide Reading 464
C.2.3.6.5 Retrieve Sulfur Dioxide Reading 465
C.2.3.6.6 Retrieve Ozone Reading [Versions 01 to 03] 466
C.2.3.6.7 Retrieve Small Particulate Matter Reading 467
C.2.3.6.8 Retrieve Compressed Air Quality Data 468
C.2.3.6.9 Retrieve Particulate Matter (2.5) Reading 471
C.2.3.6.10 Retrieve Carbon Dioxide Reading - Version 4 472
C.2.3.6.11 Retrieve Nitric Oxide Reading - Version 4 473
C.2.3.6.12 Retrieve Ozone Reading - Version 4 474
C.2.3.7 Water Level and Snapshot Tests 475
C.2.3.7.1 Retrieve Water Level 475
C.2.3.7.2 Retrieve Snapshot 476
C.2.3.8 Pavement Treatment Tests 478
C.2.3.8.1 Retrieve Stationary Pavement Treatment Configuration 478
C.2.3.8.2 Configure Stationary Pavement Treatment System 480
C.2.3.8.3 Retrieve Mobile Pavement Treatment Configuration 482
C.2.3.8.4 Configure Mobile Pavement Treatment System 484
C.2.3.8.5 Retrieve Pavement Treatment Status 486
C.2.3.8.6 Set PTS Operational Mode 488
C.2.3.8.7 Manually Activate PTS Sprayer 489
C.2.3.8.8 Retrieve Pavement Treatment Profile with Mobile Sources 490
C.2.3.8.9 Retrieve Mobile Pavement Treatment Configuration 493
C.2.3.9 Event Logging Tests 495
C.2.3.9.1 Determine Capabilities of Event Logging Service 495
C.2.3.9.2 Configure Event Log 496
C.2.3.9.3 Retrieve Logged Data 498
C.2.3.9.4 Clear Log 499

 © 2022 AASHTO / ITE / NEMA

C.2.3.9.5 Determine Total Number of Events 500
C.2.3.9.6 Verify Log Limit Storage 501
C.2.3.9.7 Verify Support for an On-Change Event 503
C.2.3.9.8 Verify Support for a Greater Than Event 504
C.2.3.9.9 Verify Support for a Less Than Event 505
C.2.3.9.10 Verify Support for a Hysteresis Event 506
C.2.3.9.11 Verify Support for a Periodic Event 507
C.2.3.9.12 Verify Support for a Bit-flag Event 508
C.2.3.9.13 Determine Configuration of Logging Service 509
C.2.3.10 Global Tests 510
C.2.3.10.1 Explore Data 510
C.2.3.10.2 Determine Device Component Information 511
C.2.3.10.3 Retrieve Device Configuration Identifier 512
C.2.3.10.4 Determine Supported Standards 513
C.2.3.10.5 Retrieve System Name 513
C.2.3.10.6 Set Time 514
C.2.3.10.7 Monitor External Port Information 515
C.2.3.10.8 Configure External Port 517
C.2.3.11 Backward Compatibility Tests 519
C.2.3.11.1 Version 1 Wind Sensor Meta Data 519
C.2.3.11.2 Version 1 Average Wind Sensor Data 520
C.2.3.11.3 Version 1 Spot Wind Sensor Data 521
C.2.3.11.4 Version 1 Wind Gust Data 522
C.2.3.11.5 Version 1 Wind Situation 523
C.2.3.11.6 Version 1 Water Depth 524
C.2.3.11.7 Version 1 Solar Radiation 525
C.2.3.11.8 Version 1 Surface Water Depth 526
C.2.3.11.9 Version 1 Surface Conductivity 527
C.2.3.11.10 Version 2 Station Meta Data Block 528
C.2.3.11.11 Version 2 Weather Block 533
C.2.3.11.12 Version 2 Pavement Block 540
C.2.3.11.13 Version 3 Monitor External Port Information 543
C.2.3.11.14 Version 3 Configure External Port 545
C.2.3.12 Mobile Sources Tests 547
C.2.3.12.1 Retrieve Sensor Profile with Mobile Sources 547

Annex D Documentation of Revisions [Informative] 551

D.1 NTCIP 1204 v01 to NTCIP 1204 v02 551
D.1.1 Station Category 551
D.1.2 Latitude 551
D.1.3 Wind Sensor Information 551
D.1.4 Water Depth 552
D.1.5 Solar Radiation 552
D.1.6 Surface Water Depth 552
D.1.7 Surface Conductivity 552
D.1.8 NTCIP 1204 V02 Errata 552
D.1.9 Correct OID Numbers 552
D.1.10 Correct Snapshot Camera Details 552
D.2 NTCIP 1204 v02 to NTCIP 1204 v03 552
D.2.1 NTCIP References 553
D.2.1.1 NTCIP 1201 Reference 553
D.2.1.2 NTCIP 1103 v01 Reference 553
D.2.1.3 NTCIP 8004 v02 Reference 553
D.2.1.4 NTCIP 8007 v01 Reference 553
D.2.2 Deletion of Requirement 3.5.1.3.2 553
D.2.3 Clarify Snapshot Camera Configuration 553

© 2022 AASHTO / ITE / NEMA Do Not Copy Without Written Permission

D.2.4 Remove Copy Snapshot Requirement 553
D.2.5 Correct Stationary Pavement Treatment System Configuration 554
D.2.6 Required Number of Water Level Sensors 554
D.2.7 Addition of Configurable Filenames for Snapshot Images 554
D.2.8 Modify Set Constraints 554
D.2.9 Clarify essTypeofStation 554
D.2.10 Correct Block Objects 554
D.2.11 Correct Access of essSnapshotCameraCommand 555
D.2.12 Added a Backward Compatibility User Need and Associated Requirements 555
D.2.13 Added Dialogs to Separate NTCIP 1204 v01 and NTCIP 1204 v02 Objects 555
D.2.14 Clarified Handling of globalSetIDParameter 556
D.2.15 Clarify Meaning of Static Tables 556
D.2.16 Seven Corrections Prior to Publication 556
D.3 NTCIP 1204 v03 to NTCIP 1204 v04 556
D.3.1 NTCIP References 556
D.3.1.1 NTCIP 1201 Reference 557
D.3.1.2 NTCIP 1103 v03 Reference 557
D.3.2 Requirements for Compressed Data 557
D.3.3 Multiple Sensors 557
D.3.3.1 Atmospheric Pressure Sensor 558
D.3.3.2 Humidity Sensor 558
D.3.3.3 Precipitation Sensor 558
D.3.3.4 Radiation Sensor 559
D.3.3.5 Friction 559
D.3.4 Expanded Support for Metadata 559
D.3.5 Removed <Set Constraint> 559
D.3.6 Added <Object Identifier> 559
D.3.7 Updated Cloud Situation 559
D.3.8 Updated Pavement Surface Condition 560
D.3.9 Updated Ground State Assessment 560
D.3.10 Updated Pavement State Assessment 560
D.3.11 Pavement Monitoring Location 560
D.3.12 Pavement Ice Percentage 560
D.3.13 Added Support for Particulate Matter (2.5) Readings 560
D.3.14 Retrieve Mobile Treatment Information Requirement 560
D.3.15 Retrieve Mobile Treatment Information Requirement 560
D.3.16 Height Objects 561
D.3.17 Air Quality Parameter Corrections 561

Annex E User Requests [Informative] 562

E.1 Features Indirectly Supported 562
E.1.1 Archiving Data on a Periodic Basis for Dial-up Operations 562
E.1.2 Precision and Accuracy Information 562
E.1.3 Retrieve Sensor Profile with Mobile Sources 562
E.1.3.1 Example Mobile Block MIB 563
E.1.3.2 Example Mobile Block XML Schema 563
E.1.3.3 Example Latitude MIB and XML Schema 564
E.2 Features Not Supported by This Version 565
E.2.1 User Defined Sampling Periods 565
E.3 File Transfer Protocol (FTP) 565

Annex F Generic Clauses [Normative] 566

F.1 External Concept of Operations 566
F.1.1 Generic Architectural Needs 566
F.1.1.1 Provide Live Data 566

 © 2022 AASHTO / ITE / NEMA

F.1.1.2 Provide Compressed Data 566
F.1.1.3 Provide Off-line Log Data 566
F.1.1.4 Condition-based Exception Reporting 567
F.1.2 Generic Features 567
F.1.2.1 Retrieve Device Identity 567
F.1.2.2 Control External Devices 567
F.2 External Requirements 567
F.2.1 Generic Architectural Requirements 567
F.2.1.1 Support Basic Communications 567
F.2.1.1.1 Retrieve Data 567
F.2.1.1.2 Deliver Data 567
F.2.1.1.3 Explore Data 567
F.2.1.2 Support Logged Data 568
F.2.1.2.1 Retrieve Current Configuration of Logging Service 568
F.2.1.2.2 Configure Logging Service 568
F.2.1.2.3 Retrieve Logged Data 568
F.2.1.2.4 Clear Log 568
F.2.1.2.5 Retrieve Capabilities of Event Logging Service 568
F.2.1.2.6 Retrieve Total Number of Logged Events 568
F.2.1.3 Manage Exception Reporting Requirements 568
F.2.1.3.1 Enable/Disable Exception Reporting 568
F.2.1.3.2 Configure Exception Reporting Condition Requirements 568
F.2.1.3.2.1 Configure a Monitored (Watch) Object 569
F.2.1.3.2.2 Configure a Monitored Group of Objects (Watch Block) 569
F.2.1.3.3 Configure Exception Reporting Data Transmission Requirements 569
F.2.1.3.3.1 Configure a Report Object 569
F.2.1.3.3.2 Configure a Report Group of Objects (Block) 569
F.2.1.3.4 Configure Exception Reporting Destination 569
F.2.1.3.5 Configure Exception Reporting Community 569
F.2.1.3.6 Configure Exception Reporting Operational Mode Requirements 570
F.2.1.3.6.1 Configure Exception Reporting Acknowledgement 570
F.2.1.3.6.2 Configure Exception Reporting Aggregation 570
F.2.1.3.6.3 Configure Exception Reporting Queue 570
F.2.1.3.6.4 Configure Exception Reporting (Forced) 570
F.2.1.3.6.5 Configure Exception Reporting Communications 570
F.2.1.3.6.6 Configure Exception Reporting - Maximum Rate 570
F.2.1.3.7 Determine Watch Block Capabilities 571
F.2.1.3.8 Determine Report Block Capabilities 571
F.2.1.3.9 Determine Exception Reporting Trap Channel Capabilities 571
F.2.1.3.10 Determine Exception Reporting Aggregation Capabilities 571
F.2.1.3.11 Determine Event Reporting Latency 571
F.2.1.3.12 Monitor Communications Link State 571
F.2.1.3.13 Monitor Exception Based Reporting Status 571
F.2.1.3.13.1 Monitor Exception Based Communications Link Error 572
F.2.1.3.13.2 Monitor Exception Based Maximum Rate Exceeded 572
F.2.1.3.13.3 Monitor Exception Based Queue Full Error 572
F.2.1.3.14 Monitor Exception Based Transmissions 572
F.2.1.3.15 Monitor Number of Lost Queued Exception Based Reports 572
F.2.1.3.16 Monitor Number of Exception Based Events 572
F.2.1.3.17 Monitor Exception Based Data 572
F.2.1.3.18 Clear Event Class 572
F.2.1.3.19 Clear Event Configuration 572
F.2.1.3.20 Clear Event Log Table 572
F.2.1.3.21 Clear Report Objects 573
F.2.1.3.22 Clear Report Blocks 573
F.2.1.3.23 Clear Watch Objects 573

© 2022 AASHTO / ITE / NEMA Do Not Copy Without Written Permission

F.2.1.3.24 Clear Watch Blocks 573
F.2.1.3.25 Clear Exception Based Reporting Tables 573
F.2.1.3.26 Reset a Communications Link 573
F.2.2 Generic Functional Requirements 573
F.2.2.1 Generic Configuration Requirements 573
F.2.2.1.1 Retrieve Device Component Information 573
F.2.2.1.2 Retrieve Device Configuration Identifier 573
F.2.2.1.3 Retrieve Supported Standards 574
F.2.2.1.4 Retrieve System Name 574
F.2.2.1.5 Manage Time 574
F.2.2.1.5.1 Set Time 574
F.2.2.1.5.2 Retrieve Current Time 574
F.2.2.1.6 Retrieve External Port Information 574
F.2.2.1.7 Configure Port Information 574
F.2.2.2 Generic Status Monitoring Requirements 574
F.2.2.2.1 Monitor Status of External Device 574
F.2.2.3 Generic Data Retrieval Requirements 574
F.2.2.4 Generic Control Requirements 575
F.2.2.4.1 Control External Device 575
F.2.3 Generic Supplemental Requirements 575
F.2.3.1 Supplemental Requirements for Event Monitoring 575
F.2.3.1.1 Record and Timestamp Events 575
F.2.3.1.2 Support a Number of Event Classes 575
F.2.3.1.3 Support a Number of Event Types to Monitor 575
F.2.3.1.4 Support Monitoring of Event Types 575
F.2.3.1.4.1 Support On-Change Events 575
F.2.3.1.4.2 Support Greater Than Events 575
F.2.3.1.4.3 Support Less Than Events 575
F.2.3.1.4.4 Support Hysteresis Events 575
F.2.3.1.4.5 Support Periodic Events 576
F.2.3.1.4.6 Support Bit Flag Events 576
F.2.3.1.5 Support Event Monitoring on Any Data 576
F.2.3.1.6 Support a Number of Events to Store in Log 576
F.2.3.2 Required Number of Auxiliary Ports 576
F.2.3.3 Atomic Operations 576
F.3 Derived GLOBAL Dialogs 576
F.3.1 Manage Communications Environment 576
F.3.1.1 Retrieving Logged Data 576
F.3.1.2 Determining Current Configuration of Event Reporting/Logging Service 577
F.3.1.3 Configuring Reporting/Logging Service 577
F.3.2 Manage Tables 578
F.3.2.1 Generic Retrieve Table Dialog 578
F.3.2.2 Generic Retrieve Table Row Dialog 579
F.3.2.3 Generic Configure Table Row 579
F.3.3 Global Time Data 579
F.3.3.1 Graphical Depiction of Global Time Data 579
F.4 External Data Elements 580
F.5 Objects “Deprecated” in v04 580
F.5.1 Filename [Deprecated in v04] 580
F.5.2 Image [Deprecated in v04] 580
Annex G SNMP Interface [Normative] 581
G.1 Generic SNMP Get Interface 581
G.2 Generic SNMP Get-Next Interface 582
G.3 Generic SNMP Set Interface 582

 © 2022 AASHTO / ITE / NEMA

G.4 Variable Binding List Structure 583
G.5 Additional Requirements 583
G.5.1 Grouping of Objects in a Request 583
G.5.2 Support of Get 583
G.5.3 Support of Get-Next 583
G.5.4 Support of Set 584
G.5.5 Performance 584

Annex H Controller Configuration Objects [Normative] 585

H.1 Controller Configuration - Version 03 585
H.2 Controller Configuration - Version 04 586

FIGURES

Page

Figure 1 Reference Physical Architecture - Weather System 13
Figure 2 Reference Logical Architecture—ESS 14
Figure 3 Remote Weather Station 15
Figure 4 Air Quality Station 15
Figure 5 Mobile Weather Station 15
Figure 6 Sprayer Combined with a Pavement Sensor 16
Figure 7 Transportable Pavement Treatment Station 16
Figure 8 Dialog for Capture Snapshot Image 86
Figure 9 Pavement Treatment System State Machine Diagram 94
Figure 10 Sample Class Diagram for Temperature Sensors 95
Figure 11 ESS Characteristics Class Diagram 96
Figure 12 Pressure Sensor Class Diagram 97
Figure 13 Wind Sensor Class Diagram 98
Figure 14 Temperature Sensor Class Diagram 99
Figure 15 Precipitation Sensor Class Diagram 100
Figure 16 Water Level Sensor Class Diagram 101
Figure 17 Humidity Sensor Class Diagram 102
Figure 18 Radiation Sensor Class Diagram 103
Figure 19 Visibility Sensor Class Diagram 104
Figure 20 Pavement Sensor Class Diagram 105
Figure 21 Subsurface Sensor Class Diagram 107
Figure 22 Air Quality Sensor Class Diagram 108
Figure 23 Snapshot Class Diagram 109
Figure 24 Pavement Treatment Class Diagram 110
Figure 25 Object Tree for NTCIP 1204 v04 268
Figure 26 Field Device Test Environment 270
Figure 27 Global Time Data 580
Figure 28 SNMP Get Interface 581
Figure 29 SNMP Get-Next Interface 582
Figure 30 SNMP Set Interface 582
Figure 31 SNMP Interface—View of Participating Classes 583

TABLES

Page

Table 1 User Need Groups and National ITS Architecture Flows 22
Table 2 Conformance Symbols 25
Table 3 Conditional Status Notation 26
Table 4 Predicate Mapping to NTCIP 1204 v04 Section 26
Table 5 Support Column Entries 27

© 2022 AASHTO / ITE / NEMA Do Not Copy Without Written Permission

Table 6 Protocol Requirements List 29
Table 7 ESS Descriptive Name, Section, and Object Name 96
Table 8 Mobile Platform Attributes 97
Table 9 Pressure Sensor Table 97
Table 10 Pressure Sensor Attributes 97
Table 11 Wind Sensor Table 98
Table 12 Wind Sensor Attributes 98
Table 13 Temperature Sensor Table Attributes 99
Table 14 Temperature Sensor Attributes 99
Table 15 Precipitation Sensor Table Attributes 100
Table 16 Precipitation Sensor Attributes 100
Table 17 Water Level Sensor Table Attributes 101
Table 18 Water Level Sensor Attributes 102
Table 19 Humidity Sensor Table Attributes 102
Table 20 Humidity Sensor Attributes 103
Table 21 Radiation Sensor Table 104
Table 22 Radiation Sensor Attributes 104
Table 23 Visibility Sensor Attributes 105
Table 24 Pavement Sensor Table Attributes 106
Table 25 Pavement Sensor Attributes 106
Table 26 Subsurface Sensor Table Attributes 107
Table 27 Subsurface Sensor Attributes 107
Table 28 Air Quality Sensor Table Attributes 108
Table 29 Air Quality Sensor Attributes 108
Table 30 Snapshot Camera Attributes 109
Table 31 Snapshot Attributes 109
Table 32 Snapshot Camera Table Attibutes 110
Table 33 Pavement Treatment System Attributes 110
Table 34 Pavement Treatment Table Attributes 111
Table 35 Pavement Treatment Attributes 111
Table 36 Requirements to Test Case Traceability Table 271
Table 37 Backward and Forward Compatibility Impacts 555

 © 2022 AASHTO / ITE / NEMA

< This page intentionally left blank. >

© 2022 AASHTO / ITE / NEMA Do Not Copy Without Written Permission

Section 1
General [Informative]

1.1 Scope

Environmental sensor stations (ESS) include a wide array of sensors, including those that monitor weather, roadway surface, water level, and air quality conditions. These sensors are typically connected to a nearby microprocessor termed a remote processor unit (RPU). An environmental sensor station (ESS) consists of the RPU plus its suite of sensors.

Typically, this equipment is fixed or permanently located at a site along a travel corridor. In some cases, the "stations" may be portable, or even mobile. For NTCIP 1204 v04 purposes, all three types of stations are called ESS. In the transportation community, these devices are frequently used to improve roadway maintenance and traffic operations.

Environmental sensors are also frequently co-located with pavement treatment systems (PTS) and, in fact, may use the same controller. Thus, for NTCIP 1204 v04 purposes, the term ESS may also include a PTS.

Note: The PTS portion of NTCIP 1204 v04 may be placed in a separate standard in the future.

Unfortunately, there have not been standards defining how these devices communicate with management systems. As a result, each manufacturer has developed its own protocol to meet its own particular needs. This approach has resulted in systems that are not interchangeable or interoperable. If an agency wishes to use either a central management system or additional ESS from a different vendor, the agency encounters significant systems integration challenges, requiring additional resources to address. These additional resource requirements inhibit information sharing within and between various potential users of the data and prevent vendor independence. Without manufacturer independence, resource requirements further increase because of a lack of a competitive market.

These problems have not been limited to weather and environmental monitoring. Many other devices also need to exchange information. In surface transportation, examples include traffic signal controllers, dynamic message signs, bus priority sensors, etc. To address these problems, NTCIP is developing a family of open standards for communications between field devices and central management systems.

NTCIP 1204 v04 is part of that larger family and is designed to define an interoperable and interchangeable interface between a transportation management system and an ESS, while still allowing for extensions beyond NTCIP 1204 v04 to allow for new functions as needed. This approach is expected to support the deployment of ESS from one or more vendors in a consistent and resource-efficient way.

NTCIP 1204 v04 only addresses a subset of the requirements needed for procurement. It does not address requirements related to the performance of the sensors (e.g., accuracy, the supported detection range, the time it takes to detect conditions, etc.), hardware components, mounting details, etc.

NTCIP 1204 v04 standardizes the communications interface by identifying the various operational needs of the users (Section 2) and subsequently identifying the necessary requirements (Section 3) that support each need. NTCIP 1204 v04 then defines the NTCIP standardized communications interface used to fulfill these requirements by identifying the dialogs (Section 4) and related data concepts (Section 5) that support each requirement.

© 2022 AASHTO / ITE / NEMA Do Not Copy Without Written Permission

Traceability among the various sections is defined by the Protocol Requirements List (Section 3.3.3) and the Requirements Traceability Matrix (Annex A). Conformance requirements for NTCIP 1204 v04 are provided in Section 3.3.2.1.

An implementation of NTCIP 1204 v04 requires lower level services to structure, encode, and exchange the data concepts defined by NTCIP 1204 v04. NTCIP 1204 v04 assumes that the data concepts are exchanged by one of the protocols defined in NTCIP 2301 v02.

1.2 References

1.2.1 Normative References

Normative references contain provisions that, through reference in this text, constitute provisions of NTCIP 1204 v04. By reference herein, these standards are adopted, in whole or in part as indicated, in this publication. At the time of publication, the editions indicated were valid. All standards are subject to revision, and parties to agreements based on NTCIP 1204 v04 are encouraged to investigate the possibility of applying the most recent editions of the standards listed.

Identifier	Title
Glossary of Meteorology	*Glossary of Meteorology, Second Edition; American Meteorological Society, 2000*
NTCIP 1103 v03	*Transportation Management Protocols (TMP)*, AASHTO / ITE / NEMA published November 2016
NTCIP 1201 v02	*Global Object (GO) Definitions,* AASHTO / ITE / NEMA published 2005
NTCIP 1201 v03	*Global Object (GO) Definitions,* AASHTO / ITE / NEMA published March 2011
NTCIP 2301 v02:2001	*Simple Transportation Management Framework (STMF) Application Profile (AP) (AP-STMF),* AASHTO / ITE / NEMA published July 2010
NTCIP 8004 v02	*Structure and Identification of Management Information (SMI)* published June 2010, AASHTO / ITE / NEMA
RFC 1213	*Management Information Base for Network Management of TCP/IP-based internets: MIB-II*
RFC 1157	*Simple Network Management Protocol (SNMP), J.D. Case, M. Fedor, M.L. Schoffstall, J. Davin, 2002 (Historic)*
WMO No. 306:1995	*Technical Regulations; Manual on Codes, International Codes, Volume 1.2, Annex II, FM 94-X Ext. BUFR—Binary Universal Form for the Representation of Meteorological Data*

1.2.2 Other References

The following documents and standards may provide the reader with a more complete understanding of the entire protocol and the relations between all parts of the protocol. However, these documents do not contain direct provisions that are required by NTCIP 1204 v04. At the time of publication, the editions indicated were valid. All standards are subject to revision, and parties to agreements based on NTCIP 1204 v04 are encouraged to investigate the possibility of applying the most recent editions of the standard listed.

Identifier	Title
DIN EN 15518-3:2011	*Winter maintenance equipment - Road weather information systems - Part 3:Requirements on measured values of stationary equipment*, European Standard, 2011

 © 2022 AASHTO / ITE / NEMA

Identifier	Title
IAB STD 16	(RFC 1155) *Structure and Identification of Management Information for TCP/IP-based Internets,* M. Rose, K. McCloghrie, May 1990, (RFC 1212) *Concise MIB Definitions*, M. Rose and K. McCloghrie, March 1991
National ITS Architecture 7.1	National ITS Architecture 7.1, USDOT *http://www.iteris.com/itsarch/*
TMDD	*Traffic Management Data Dictionary (TMDD) Standard v3.03 for the Center to Center Communications, v3.03c,* AASHTO / ITE published July 16, 2014
NTCIP 2201:2003	*Transportation Transport Profile (T2),* AASHTO / ITE / NEMA published September 2005
NTCIP 2202:2001	*Transport Profile for Internet (TCP/IP and UDP/IP),* AASHTO / ITE / NEMA published December 200
NTCIP 2306 v01	*Application Profile for XML Message Encoding and Transport in ITS Center-to-Center Communications (NTCIP-C2CXML),* AASHTO / ITE / NEMA published December 2008
NTCIP 8007 v01	*Testing and Conformity Assessment Documentation within NTCIP Standards Publications,* AASHTO / ITE / NEMA published May 2008
IEEE 610.12-1990	*IEEE 610.12-1990, IEEE Standard Glossary of Software Engineering Terminology,* published 31 Dec 1990
RFC 5935 (IAB)	*Expressing SNMP SMI Datatypes in XML Schema Definition Language,* M. Rose, K. McCloghrie, August 2010
OMG Unified Modeling Language Specification, Version 1.5	*OMG Unified Modeling Language Specification,* Object Management Group, 2003
SAE 1939	*Serial Control and Communications Heavy Duty Vehicle Network – Top Level Document, J1939_201308,* published August 2013
SAE 1979	*E/E Diagnostic Test Modes, J1979_201202,* published February 2012
Weather-Responsive Traffic Management	*Weather-Responsive Traffic Management – Concept of Operations. FHWA, 2003* ops.fhwa.dot.gov/weather/best_practices/WeatherConOps0103.pdf

1.2.3 Contact Information

1.2.3.1 AASHTO / ITE Traffic Management Data Dictionary (TMDD) Documents

The Traffic Management Data Dictionary (TMDD) documents can be downloaded at:

www.ite.org/standards/tmdd/

1.2.3.2 American Meteorological Society & World Meteorological Organization (WMO) Documents

Prepayment is required prior to shipment of these documents. Printed copies are available from:

American Meteorological Society
45 Beacon Street
Boston, MA 02108
(617) 227-2425
www.ametsoc.org

© 2022 AASHTO / ITE / NEMA Do Not Copy Without Written Permission

1.2.3.3 IEEE

IEEE standards can be purchased on-line in electronic format or printed copy from:

Techstreet
6300 Interfirst Dr.
Ann Arbor, MI 48108
(800) 699-9277
www.techstreet.com/ieee

1.2.3.4 Internet Documents

Obtain Request for Comment (RFC) electronic documents from several repositories on the World Wide Web, or by “anonymous” File Transfer Protocol (FTP) with several hosts. Browse or FTP to:

www.rfc-editor.org
www.rfc-editor.org/repositories.html
for FTP sites, read ftp://ftp.isi.edu/in-notes/rfc-retrieval.txt

1.2.3.5 National ITS Architecture

The National ITS Architecture may be viewed on-line at:

www.its.dot.gov/arch/index.htm

1.2.3.6 NTCIP Standards

Copies of NTCIP standards may be obtained from:

NTCIP Coordinator
National Electrical Manufacturers Association
1300 N.17th Street, Suite 900
Rosslyn, Virginia 22209-3801
www.ntcip.org
e-mail: ntcip@nema.org

Draft amendments, which are under discussion by the relevant NTCIP Working Group, and amendments recommended by the NTCIP Joint Committee are available.

1.2.3.7 Object Management Group Documents

Copies of OMG standards may be obtained electronically from the Object Management Group at:

www.omg.org

1.2.3.8 Office of the Federal Coordinator for Metrology (OFCM) Documents

Copies of OFCM documents may be obtained from:

Office of the Federal Coordinator for Meteorology
8455 Colesville Rd., Suite 1500
Silver Spring, MD 20910
(301) 427-2002
www.ofcm.gov

Do Not Copy Without Written Permission © 2022 AASHTO / ITE / NEMA

1.2.3.9 SAE International Documents

Copies of SAE International documents may be obtained from:

SAE Customer Serrice
400 Commonwealth Drive
Warrendale, PA 15096-0001
(877) 606-7323
store.sae.org

1.3 General Statements

<In the opinion of the responsible NTCIP working group, Section 1.3 does not apply in the context of NTCIP 1204 v04.>

1.4 Terms

For the purposes of NTCIP 1204 v04, the following terms, definitions, acronyms, and abbreviations apply. Meteorological terms not defined in this section are in accordance with their definitions in the *Glossary of Meteorology*. Electrical and electronic terms not defined here are used in accordance with their definitions in IEEE Std 100-2000. English words not defined here or in IEEE Std 100-2000 are used in accordance with their definitions in *Webster's New Collegiate Dictionary*.

Term	Definition
Binary Universal Form for the Representation of Meteorological Data (BUFR)	The name of the WMO standard binary code for the exchange and storage of non-gridded meteorological data.
Compatible	The ability of two or more systems or components to exchange information. Note: See IEEE 610.12-1990.
Consistent	The ability of two or more systems or components to exchange information and use the supported information that has been exchanged and gracefully reject any unsupported information according to defined rules.
Controller	A host computing platform that is used to manage the collection and reporting of sensor data and/or to manage the treatment of pavement for icing conditions. Note: Within the ESS community, sometimes called a remote processor unit or "RPU".
Current	Reflecting the conditions at the present time (or at the time at which the data is time stamped) as determined by the Controller.

© 2022 AASHTO / ITE / NEMA Do Not Copy Without Written Permission

Term	Definition
Deprecated	In the context of a MIB, “deprecated” is an object STATUS value that indicates the object is valid in limited circumstances, but has been replaced by another. Note: This definition is modified from “Understanding SNMP MIBS.” To maintain multi-version interoperability (backward compatibility) for legacy implementations, objects with a STATUS value of “deprecated” may require support. When necessary to support legacy implementations, required support for objects with a STATUS value of “deprecated” is indicated using the PICS or Protocol Requirements List (PRL). See NTCIP 8004 v02.
Environmental Monitoring Equipment Package	The component within a management subsystem which performs advanced processing of the collected environmental data. This would include the analysis, forecasting and packaging of weather and road condition information for resource management.
Environmental Sensor Station (ESS)	A location that includes a remote processor unit (RPU) connected to one or more sensors for the collection of environmental or meteorological data. It may also include a pavement treatment system (PTS). Note: The acronym ESS may also be used as a plural.
Feature	A behavior of the device.
Interchangeable	A condition which exists when two or more items possess such functional and physical characteristics as to be equivalent in performance and durability, and are capable of being exchanged one for the other without alteration of the items themselves, or adjoining items, except for adjustment, and without selection for fit and performance. Note: See National Telecommunications and Information Administration, U.S. Department of Commerce
Interoperable	The ability of two or more systems or components to exchange information and use the information that has been exchanged. Note: See NTCIP 8004 v02.
Management Information Base (MIB)	Management information of object definitions so that devices on a network can be remotely monitored, configured and controlled. The information is provided in a format called Abstract Syntax Notation.1 (ASN.1), which is an international standard for defining objects.
Management Station	The computer system with which the device communicates. Typically, the management station commands and monitors the device.
Mobile	In the context of an ESS, the ESS, including environmental sensors and pavement treatment devices, is able to operate while in motion.

Do Not Copy Without Written Permission © 2022 AASHTO / ITE / NEMA

Term	Definition
Obsolete	In the context of a MIB, an object STATUS value that indicates the definition is no longer valid, was found to be flawed, was redundant or not useful. Note: In the next (or some future) edition of a standard, the object or group with a STATUS value of “obsolete” may be removed. This definition is modified from “Understanding SNMP MIBS.” See NTCIP 8004 v02.
Operator	The person who interfaces with the management station software, typically located at a control center.
Permanent (Fixed)	In the context of an ESS, an ESS not designed to be relocated, hence fixed.
Protocol	A specific set of rules, procedures, and conventions defining the format and timing of data transmissions between devices that are accepted and used to understand each other. Note: See NTCIP 8004 v02.
Remote Processor Unit (RPU)	A field processor that collects data from sensors and can communicate the collected data to other computers; the processor may also process the collected data and/or control equipment.
Requirement	A requirement describes a condition or capability to which a system shall conform; either derived directly from user needs, or stated in a contract, standard, specification, or other normative document. A desired feature, property, or behavior of a system.
Requirements Traceability	The ability to follow or study the logical progression among the needs, requirements, and design details in a step-by-step fashion.
Return	When discussing device requirements for providing data when an external system requests it, the term “return” is understood to mean that the data is sent to the requester.
Road Weather Data Collection Market Package	A set of components that perform all operations related to sensing, collecting, processing, and exchanging environmental related information, including the exchange of data among the dispersedly located equipment.
Road/Weather Information System	The collection of RPUs and sensors connected to a central system for analysis and use by maintenance personnel and transportation system managers.
Sensor	A device that is capable of detecting a condition and reporting the result to an RPU.
Simple Network Management Protocol (SNMP)	A communications protocol developed by the IETF, used for configuration and monitoring of network devices.
Simple Transportation Management Framework (STMF)	Describes the organization of information within devices and methods of retrieving or modifying any information within the device. Note: STMF also explains how to generate and use computer-readable information organization descriptions. See NTCIP 8004 v02.

© 2022 AASHTO / ITE / NEMA Do Not Copy Without Written Permission

Term	Definition
Specification	A document that references a standard either to define the capabilities of a component (e.g., a specification sheet) or to define the required capabilities of a component being procured (e.g., a procurement specification).
Sub-Feature	A specialization of a more generic feature.
Transportable	In the context of an ESS, an ESS capable of being relocated, but its environmental sensors and pavement treatment devices do not operate while moving.
Upload	To transfer information from the referenced device to the central computer or an attached portable computer.
User	A person using the system that is developed.
User Need	The business or operational problem (opportunity) that is to be fulfilled to justify procurement or use. Note: While this is termed a “user need” within the NTCIP community, it reflects needs of all stakeholders.

1.5 Abbreviations

The abbreviations and acronyms used in NTCIP 1204 v04 are defined as follows:

AC Alternating Current

ASN.1 Abstract Syntax Notation One

CAN Controller Area Network

CPU Central Processing Unit

DMS Dynamic Message Sign

ESS Environmental Sensor Station

IANA Internet Assigned Number Authority

IETF Internet Engineering Task Force

IP Internet Protocol

ITS Intelligent Transportation Systems

MIB Management Information Base

OID OBJECT IDENTIFIER

PICS Protocol Implementation Conformance Statement

PMPP Point to Multi-Point Protocol

PRL Profile Requirements List

PTS Pavement Treatment System (or Systems)

RPU Remote Processor Unit

RSE RoadSide Equipment

Do Not Copy Without Written Permission © 2022 AASHTO / ITE / NEMA

SNMP	Simple Network Management Protocol
STMF	Simple Transportation Management Framework
T2	Transportation Transport Profile
TCP	Transmission Control Protocol
TMC	Traffic Management Center
TMDD	Traffic Management Data Dictionary
TMP	Transportation Management Protocol
UDP	User Datagram Protocol
WG	Working Group
WMO	World Meteorological Organization

© 2022 AASHTO / ITE / NEMA Do Not Copy Without Written Permission

Section 2
Concept of Operations [Normative]

Section 2 defines the user needs that subsequent sections within NTCIP 1204 v04 address. Accepted system engineering processes detail that requirements should only be developed to fulfill well-defined user needs. The first stage in this process is to identify the ways in which the system is intended to be used. In the case of NTCIP 1204 v04, this entails identifying the various ways in which transportation operations personnel may use ESS information to fulfill their duties.

This concept of operations provides the reader with:

a) a detailed description of the scope of this standard;
b) an explanation of how an ESS is expected to fit into the larger context of an ITS network;
c) a starting point in the agency procurement process; and
d) an understanding of the perspective of the designers of NTCIP 1204 v04.

Section 2 is intended for all readers of NTCIP 1204 v04, including:

a) transportation operations managers
b) transportation operations personnel
c) transportation engineers
d) system integrators
e) device manufacturers

For the first three categories of readers, Section 2 is useful to understand how ESS equipment can be used in their system. For this audience, Section 2 serves as the starting point in the procurement process, and enables these readers to become familiar with each feature covered by NTCIP 1204 v04 and determine whether that feature is appropriate for their implementation. If it is, then the procurement specification needs to require support for the feature and all of the mandatory requirements related to that feature.

For the last two categories of readers, Section 2 provides a more thorough understanding as to why the more detailed requirements exist later in NTCIP 1204 v04.

2.1 Tutorial [Informative]

A concept of operations describes a proposed system from the users' perspective. Typically, a concept of operations is used on a project to ensure that system developers understand users' needs. Within the context of NTCIP standards, a concept of operations documents the intent of each feature for which NTCIP 1204 v04 supports a communications interface. It also serves as the starting point for users to select which features may be appropriate for their project.

The concept of operations starts with a discussion of the current situation and issues that have led to the need to deploy systems covered by the scope of NTCIP 1204 v04 and to the development of NTCIP 1204 v04 itself. This discussion is presented in layman's terms such that both the potential users of the system and the system developers can understand and appreciate the situation.

The concept of operations then documents key aspects about the proposed system, including:

a) Reference Physical Architecture - The reference physical architecture defines the overall context of the proposed system and defines which specific interfaces are addressed by NTCIP 1204 v04. The

Do Not Copy Without Written Permission © 2022 AASHTO / ITE / NEMA

reference physical architecture is supplemented with one or more samples that describe how the reference physical architecture may be realized in an actual deployment.

b) Architectural Needs - The architectural needs section discusses the issues and needs relative to the system architecture that have a direct impact on NTCIP 1204 v04.
c) Features - The features identify and describe the various functions that users may want components of an ESS system to perform. These features are derived from the high level user needs identified in the problem statement but are refined and organized into a more manageable structure that forms the basis of the traceability tables contained in Section 3 and Annex A.

The architectural needs and features are collectively called *user needs*. Section 3 uses these user needs in the analysis of the system to define the various functional requirements of an ESS. Each user need shall be traced to one or more functional requirements, and each functional requirement shall be derived from at least one user need. This traceability is shown in the Protocol Requirements List (PRL) as provided in Section 3.3.

While NTCIP 1204 v04 is intended to standardize communications across a wide range of deployments, it is not intended to mandate support for every feature for every deployment. Therefore, the PRL also defines each user need and requirement as mandatory, optional, or conditional. The only items marked mandatory are those that relate to the most basic functionality of the device. To obtain a device that meets specific needs, the user first identifies which optional needs are necessary for the specific project.

Each requirement identified is then presented in the Requirements Traceability Matrix (RTM) in Annex A, which defines how the requirement is fulfilled through standardized dialogs and data element definitions provided in Section 4 and Section 5.

A conformant device may support other user needs, as long as they are conformant with the requirements of NTCIP 1204 v04 and its normative references (see Section 1.2.1). For example, a device may support data that has not been defined by NTCIP 1204 v04; however, when exchanged via one of the NTCIP 2301 v02 protocols, the data shall be properly registered with a valid OBJECT IDENTIFIER under the Global ISO Naming Tree.

> Note: Off-the-shelf interoperability and interchangeability can only be obtained by using well-documented user needs, along with their corresponding requirements and design, that are broadly supported by the industry as a whole. Designing a system that uses environments or features not defined in a standard or not typically deployed in combination with one another inhibits the goals of interoperability and interchangeability, especially if the documentation of these user needs is not available for distribution to system integrators. NTCIP 1204 v04 allows implementations to support additional user needs to support innovation, which is constantly needed within the industry, but users should be aware of the risks involved with using such environments or features.

The concept of operations concludes by describing the degree to which security issues have been addressed by the NTCIP 1204 v04 and by providing a description of how NTCIP 1204 v04 relates to the National ITS Architecture.

2.2 Current Situation and Problem Statement [Informative]

Transportation system managers use ESS in a variety of ways to improve transportation system operations. The primary uses of ESS data support the following:

a) sharing data with the broader weather community contributes to better weather forecasts
b) improved highway maintenance operations through supporting timely, accurate, and relevant weather forecasting and knowledge of existing road weather conditions
c) more accurate traveler information, which can result in better route planning by travelers and more effective, safer transportation system use

© 2022 AASHTO / ITE / NEMA Do Not Copy Without Written Permission

d) improved management of facilities maintenance resources, leading to more timely facilities clearance and improved traveler safety
e) more effective use of advisory and regulatory mechanisms to ensure public safety
f) enhanced monitoring of potential hazardous conditions, to improve transportation system security and traveler safety
g) Facilitate sharing of air quality information collected by sensors in field devices and on mobile platforms

Additional information about how this data can be used is provided in *Weather-Responsive Traffic Management-Concept of Operations.* One of the most common ESS deployed by transportation system managers is the road/weather ESS. These ESS are used to collect information about road and weather conditions, such as precipitation and air and surface temperatures. With the data returned by these ESS, transportation system managers can determine when there are incipient hazardous travel conditions because of precipitation, fog, high winds, snow, ice, and/or flooding. When travel is becoming hazardous because of snow and/or ice, transportation system managers can dispatch road maintenance crews to treat the roads and remove snow and ice if possible.

Transportation system managers can also use ESS in conjunction with other Intelligent Transportation System (ITS) devices, such as Dynamic Message Signs (DMS), to advise travelers of poor travel conditions or to notify travelers of travel policy changes because of bad weather. For example, foggy conditions could trigger a DMS to display a lowered speed limit in a high-speed area. Snow and ice conditions could trigger a DMS to display a requirement for travelers to use chains on their tires. Icy conditions on bridges or roadways can also lead to the triggering of a spraying device that sprays anti-icing or de-icing chemicals on bridge or roadway surfaces to improve driving conditions. High water or high wind conditions could trigger a DMS to display a message either recommending that travelers choose a different route or that they reduce their speed to protect themselves against the potential hazard.

Although transportation system managers are the normal users of ESS, the data from these ESS are sometimes used by emergency management personnel. For example, when flood conditions occur, regardless of their extent, emergency management personnel use data on the depth of water in areas covered by ESS to determine how and when to respond to flooding. Emergency management personnel re-route travelers from flooded areas, in some cases by deploying (in conjunction with transportation system personnel) signs indicating that sections of road are closed because of flooding.

A transportation system manager may also be interested in using an ESS to measure air quality. This data can be used to monitor concentrations of certain chemicals to ensure that they do not exceed toxic levels. For example, tunnel systems frequently use sensors to ensure that carbon monoxide levels stay within safe levels. The data can also provide a valuable resource to air quality management systems to determine the accuracy of predictions. Finally, some research has suggested that air quality hot spots could be monitored to encourage traffic to avoid these areas during problematic periods.

An ESS is typically deployed along the roadside as part of a network of sensors that report their findings to a central management system. The ESS data received at the central system is processed to provide the transportation system manager with intelligence about road weather conditions that can trigger operator action. For example, high wind conditions might trigger a warning to travelers; if the high wind conditions are severe or in an area where they constitute a high risk, they might trigger the closing of a bridge or a section of roadway. Likewise, a network of ESS may also be used to provide the transit system operator information about conditions that affect the health or safety of transit riders. The processing logic could be rather simple (e.g., monitoring high winds) or very complex (e.g., predictions of weather conditions on or near the road). In the latter case, the ESS data would likely serve as one of many inputs; others might include data from the national weather service and other sources.

However, ESS can also be deployed on a vehicle or a transportable platform (such as on a trailer). Usually, these ESS are atmospheric sensors or pavement sensors, gathering information about snow and ice conditions, pavement conditions, and similar data designed to provide the transportation system

Do Not Copy Without Written Permission © 2022 AASHTO / ITE / NEMA

manager with information about conditions along a particular section of roadway. The data from mobile ESS are used to complement those from stationary ESS also deployed along the transportation network.

If the ESS data is shared with other agencies, that agency may be interested in the metadata about the sensor used to report the data. Such metadata might include the make, model, and version of the device components, the technology used, and, on a mobile station, the placement of the sensor relative to the mobile platform. The metadata is needed to indicate how the sensor readings can be used. For example, the snow depth on the roadway, before and after a snow plow passes, indicates two very different things.

2.3 Reference Physical Architecture [Informative]

Figure 1 represents an overview of what a complete environmental system may look like for a transportation agency, and what information standards may be applicable for each interface. Within this system, a Fleet Vehicle is an agency vehicle, such as a snow plow, as opposed to a personal vehicle.

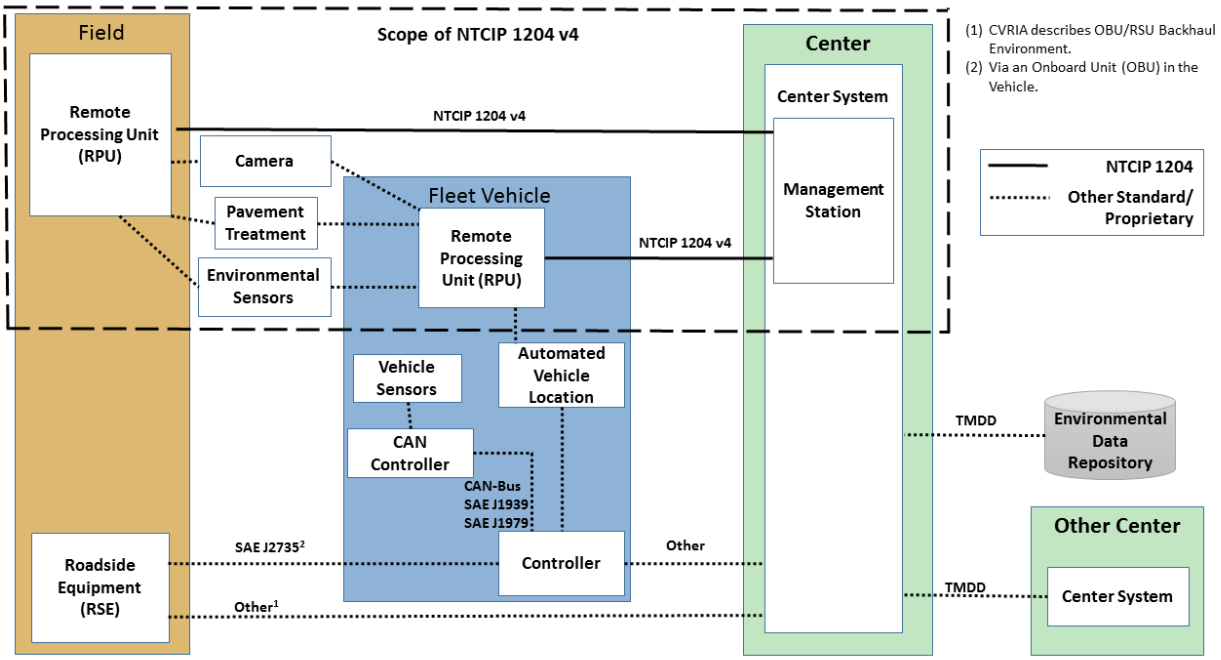

Figure 1 Reference Physical Architecture - Weather System

The major components of the weather system include:

a) **Management Station:** One or more host computing platforms that manage one or more NTCIP field devices, such as an ESS. Management stations are typically located in some type of management center (e.g., a Traffic Management Center) and may be a considerable distance from the ESS. Other types of management stations include maintenance laptops that a field technician may use on a trip to visit the device or a field processor that may monitor the data reported from the ESS and automatically activate signs or other equipment under certain conditions. There may be multiple management stations for a given ESS. Within the ESS community, a management station is sometimes called a central processing unit or "CPU". The management station is responsible for configuring, monitoring, and controlling the ESS.

b) **Remote Processor Unit (RPU):** A host computing platform that is used to manage the collection and reporting of sensor data and/or to manage the treatment of pavement for icing conditions. The RPU continuously monitors weather, roadway, surface, water level and air quality conditions. When a RPU receives a request, it shall immediately respond with its most recent reading for that data. A system operator should be aware that the nature of some information may require significant time to collect

© 2022 AASHTO / ITE / NEMA Do Not Copy Without Written Permission

(e.g., average wind speed), or may be dated (e.g., information stored in a log); thus, the information contained in the response may have been collected some time prior to the request being sent.

c) **Environmental Sensor:** A device that responds to an environmental physical stimulus and transmits a resulting impulse.
d) **Pavement Treatment:** A system to perform maintenance on a roadway pavement. This may include a snowplow, a device to dispense materials on the roadway pavement, or a device that stores the materials to be dispensed.
e) **Controller:** A host computing platform that is used to manage the collection and reporting of sensor data.
f) **Vehicle Sensor:** A device connected to a vehicle's controller area network that responds to a physical stimulus and transmits a resulting impulse.
g) **Center System:** A system located within a management center used to monitor and operate an agency's assets.
h) **Environmental Data Repository:** A central place where environmental data is stored and maintained.
i) **CAN Controller:** Receives and stores information from a vehicles' controller area network (CAN).
j) **Roadside Unit:** A wireless access point that can provide communications with the infrastructure.

NTCIP 1204 v04 addresses the communications interface between a management station and a RPU. The relationship between these and other logical components is depicted in Figure 2.

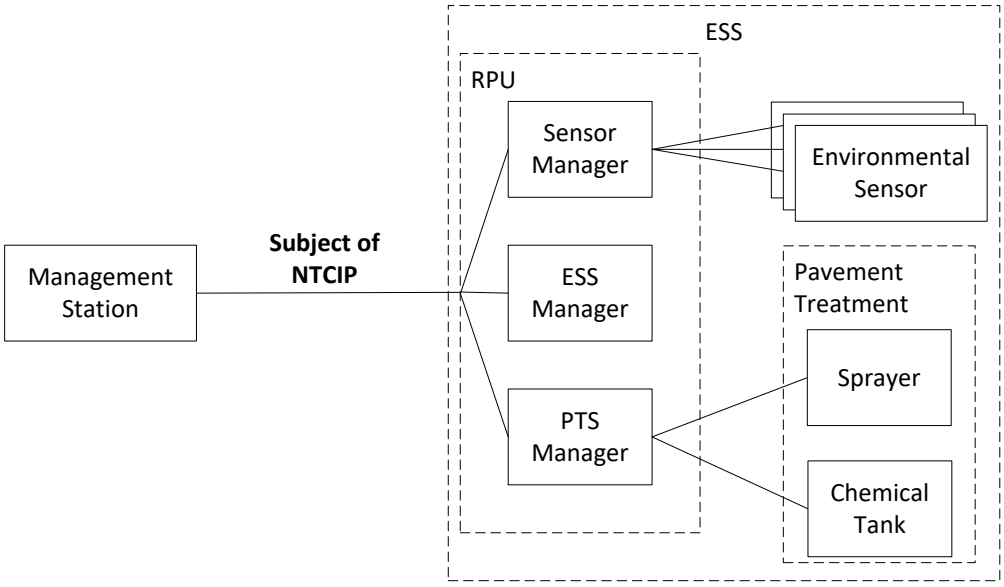

Figure 2 Reference Logical Architecture—ESS

The major components of the system are:

a) **ESS:** An RPU and its connected equipment, such as environmental sensors and/or pavement treatment equipment, including sprayer(s) and a chemical tank. Each of its sub-components is defined further. The RPU includes an ESS Manager and may include a Sensor Manager and/or a PTS Manager.
b) **Sensor Manager:** The portion of the RPU that manages the collection and reporting of sensor data.
c) **ESS Manager:** The portion of the RPU that deals with general functionality that applies to both sensor management and PTS management.
d) **PTS Manager:** The portion of the RPU that manages the treatment of pavement for icing conditions.
e) **Sprayer:** A device that dispenses the chemical from the storage tank as a fine mist.
f) **Chemical Tank:** A vessel used to store a chemical mixture for later application to the roadway.

Do Not Copy Without Written Permission © 2022 AASHTO / ITE / NEMA

The actual physical arrangement of these components may vary from deployment to deployment.

Sections 2.3.1 through 2.3.5 provide sample physical architectures that are supported by this reference architecture.

2.3.1 Remote Weather Station

Figure 3 depicts a wind sensor that is connected by a low speed wireless radio link because of its remote location.

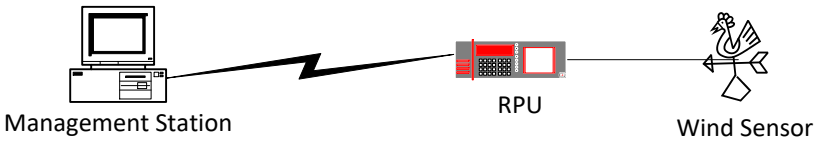

Figure 3 Remote Weather Station

2.3.2 Air Quality Station

Figure 4 depicts an air quality sensor that is connected by a fiber optic network.

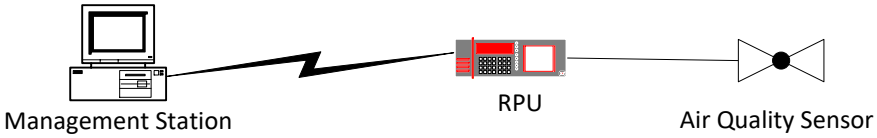

Figure 4 Air Quality Station

2.3.3 Mobile Weather Station

Figure 5 depicts a non-invasive pavement sensor mounted on a maintenance vehicle that is connected by a cellular data modem because of its mobile characteristics.

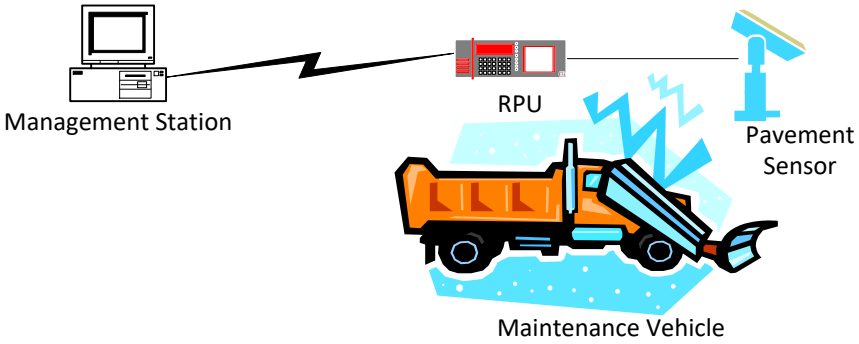

Figure 5 Mobile Weather Station

2.3.4 Sprayer Combined with a Pavement Sensor

Figure 6 depicts an ESS consisting of a RPU, a pavement sensor, and a sprayer. The RPU is connected to the management station through a separate connection, perhaps a dial-up link.

© 2022 AASHTO / ITE / NEMA Do Not Copy Without Written Permission

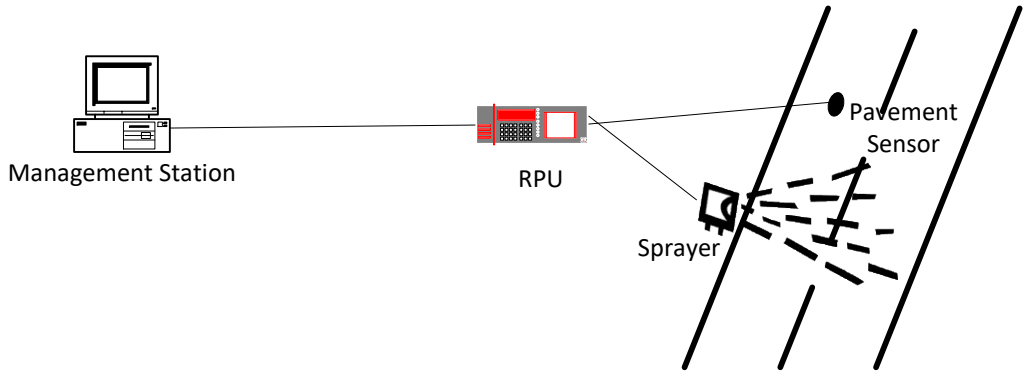

Figure 6 Sprayer Combined with a Pavement Sensor

2.3.5 Pavement Treatment Station

Figure 7 depicts a transportable ESS that only consists of sprayers for pavement treatment.

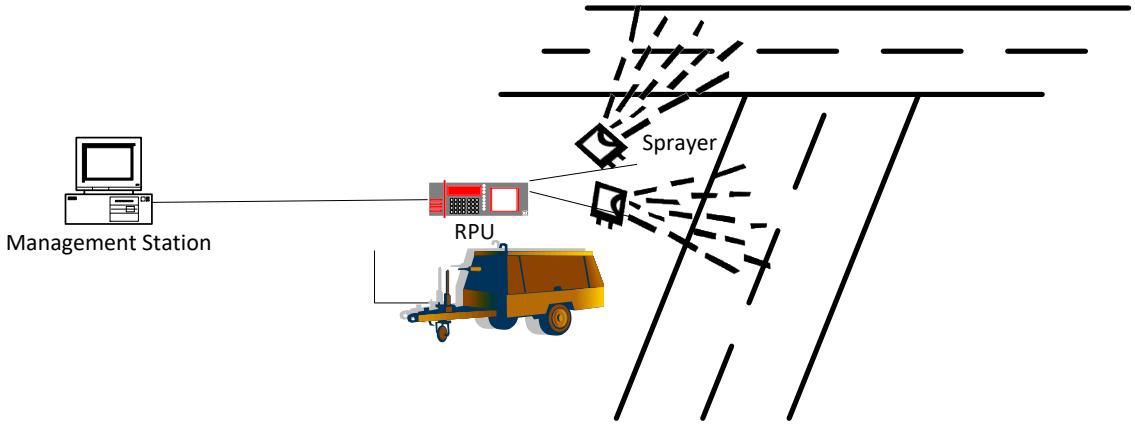

Figure 7 Transportable Pavement Treatment Station

2.4 Architectural Needs

NTCIP 1204 v04 addresses the interface between an ESS and one or more management stations (e.g., central computers, laptops, etc.). The data collected by the ESS may include data from multiple sensors. When communicating with a management station, each reading needs to be clearly associated with a specific sensor. After the management station has retrieved the data of interest, the operator can use the retrieved data to make decisions and initiate other events (such as changes to DMS messages) to better manage the transportation system.

To enable communications between these components, the transportation system manager needs to establish a communication system that links the ESS with a management station. For some systems, the resources required for communications may be minimal and as such the system may be designed for constant polling; other systems may require significant resources for communicating with the ESS and as such the system may be designed to minimize data exchanges. When deploying an ESS, the system designer needs to consider which of the following operational environments need to be supported.

An ESS is expected to operate in the communications environment defined as follows.

Do Not Copy Without Written Permission © 2022 AASHTO / ITE / NEMA

2.4.1 Generic Architectural Needs

The features defined in Annex F.1.1 shall be incorporated into this standard by reference.

> Note: Some user needs apply to a wide range of different types of NTCIP devices. It is expected that these user needs are expected to eventually be documented in a separate standard. However, at this time, the separate standard does not exist. Instead, these user needs are defined in Annex F as an interim step to the creation of a separate standard.

2.5 Features

Section 2.5 identifies and describes the various features that may be offered by the ESS. It is divided into the following:

a) ESS Manager Features
b) Sensor Manager Features
c) Pavement Treatment System Manager Features

2.5.1 ESS Manager Features

Section 2.5.1 identifies and describes the various features that may be offered by the ESS Manager, which is the part of the RPU that performs the functionality that may apply to both a Sensor Manager and a PTS Manager. It consists of the following features:

a) Generic Features
b) Monitor Door Status
c) Monitor Power
d) Monitor Mobile Station Data
e) Determine ESS Type

2.5.1.1 Generic Features

The features defined in Annex F.1.2 shall be incorporated into this standard by reference.

> Note: Some user needs apply to a wide range of different types of NTCIP devices. These user needs are expected to eventually be documented in a separate standard. However, at this time, the separate standard does not exist. Instead these user needs are defined in Annex F as an interim step to the creation of a separate standard.

2.5.1.2 Monitor Door Status

A transportation system operator may need to determine if any doors on permanent or transportable ESS equipment are open; this may assist the operator in determining whether a RPU needs maintenance and/or may act as an indication to the system to treat any data as suspect.

2.5.1.3 Monitor Power

A transportation system operator may need to monitor the power for the ESS to ensure proper operation; this may assist the operator in determining whether the power source for the ESS is suspect and needs maintenance. This need may not apply to a mobile ESS using the vehicle’s power source.

2.5.1.4 Monitor Mobile Station Data

A transportation system operator may need to monitor the movements of a mobile ESS. This feature allows the transportation system operator to determine the location where sensor readings are collected.

© 2022 AASHTO / ITE / NEMA Do Not Copy Without Written Permission

2.5.1.5 Determine ESS Type

Some features defined within NTCIP 1204 v04 are not applicable to all ESS - some features are dependent on whether an ESS is permanent, transportable, or mobile.

a) **Permanent:** The ESS is not designed to be relocated.
b) **Transportable:** The ESS is capable of being relocated, but its environmental sensors and pavement treatment devices do not operate while moving.
c) **Mobile:** The ESS, including environmental sensors and pavement treatment devices, is able to operate while in motion.

Thus, the user categorizes the ESS according to whether it is permanent, transportable, or mobile prior to determining which requirements are mandatory for a particular project or ESS.

Note: An agency (procurement) specification may include one to all of these types.

2.5.1.6 Monitor the Status of the ESS

A transportation system operator needs to monitor the ESS status to determine the operational state of the ESS. This feature allows the operator to determine if the ESS has detected a fault, such as sensor failure, that may prevent the proper operation of the ESS.

2.5.2 Sensor Manager Features

Section 2.5.2 identifies and describes the various features that may be offered by the Sensor Manager:

a) monitor weather conditions
b) monitor pavement
c) monitor subsurface conditions
d) monitor human readings
e) monitor water levels
f) monitor air quality and biohazards
g) monitor mobile weather profile

2.5.2.1 Monitor Weather Conditions

This feature focuses on weather conditions that can directly or indirectly affect the transportation system. It includes the following sub-features.

2.5.2.1.1 Monitor Atmospheric Pressure

A transportation system operator may need to monitor the atmospheric pressure in the vicinity of the ESS and to configure and retrieve the metadata for the atmospheric pressure measurements. This feature allows the operator to monitor changing weather conditions.

2.5.2.1.2 Monitor Winds

A transportation system operator may need to monitor the current wind conditions in the vicinity of the ESS and to configure and retrieve the metadata for the wind measurements. This feature allows an operator to determine if vehicle restrictions on a given roadway or bridge span should be issued or to restrict roadway maintenance (e.g., fire alerts).

2.5.2.1.3 Monitor Air Temperature

A transportation system operator may need to monitor the air temperature at the ESS location and to configure and retrieve the metadata for the temperature measurement. This feature allows an operator to

Do Not Copy Without Written Permission © 2022 AASHTO / ITE / NEMA

dispatch maintenance vehicles to treat roadway pavement or to determine if restrictions or warnings to travelers should be issued.

2.5.2.1.4 Monitor Relative Humidity

A transportation system operator may need to monitor the relative humidity at the ESS location and to configure and retrieve the metadata for the humidity measurement. This feature allows an operator to schedule roadway maintenance activities, such as painting.

2.5.2.1.5 Monitor Precipitation

A transportation system operator may need to monitor the amount, intensity, and type of precipitation in the vicinity of the ESS and to configure and retrieve the metadata for the precipitation measurements. This feature allows an operator to determine if restrictions or warnings, such as flood warnings, should be issued to travelers.

2.5.2.1.6 Monitor Solar Radiation

A transportation system operator may need to monitor the amount of solar radiation in the vicinity of the ESS and to configure and retrieve the metadata for the solar radiation measurements. This feature allows an operator to schedule maintenance activities (e.g., based on pavement temperatures) or restrict roadway usage.

2.5.2.1.7 Monitor Visibility

A transportation system operator may need to monitor the visibility in the vicinity of the ESS and to configure and retrieve the metadata for the visibility measurement. This feature allows an operator to determine if restrictions or warnings are needed, such as lowering vehicle speed limits.

2.5.2.1.8 View Environmental Image

A transportation system operator may need to visually inspect weather or pavement conditions and/or verify the reported weather or pavement conditions.

2.5.2.1.9 Monitor Dewpoint Temperature

A transportation system operator may need to monitor the dew point temperature. The dew point temperature can be calculated or measured, and is used to determine the temperature when condensation (dew, frost) occurs.

2.5.2.2 Monitor Pavement

This feature focuses on monitoring road conditions that may adversely affect transportation operations immediately or in the near future. It supports the transportation system operator's ability to dispatch equipment to address the condition or to provide appropriate warnings. It includes the following sub-features.

2.5.2.2.1 Monitor Pavement Surface Condition

A transportation system operator may need to monitor the pavement surface temperature, the moisture condition (e.g., dry, wet, snowy, icy, chemical concentration, etc.) on and around the roadway pavement, and to configure and retrieve the metadata for the roadway pavement sensors. This feature allows an operator to monitor for readings that could lead to hazardous conditions on the roadway based on moisture or low roadway friction, and allows maintenance managers to determine, in combination with other data, if they need to treat the road.

© 2022 AASHTO / ITE / NEMA Do Not Copy Without Written Permission

2.5.2.2.2 Monitor Icing Conditions

A transportation system operator may need to monitor whether pavement conditions are likely for ice formation on the pavement. This includes the ability to monitor pavement temperature (i.e., as opposed to surface temperature), the depth of any water film on the surface, and the predicted freeze point of the surface. This feature focuses on the conditions on the roadway pavement surface that can directly or indirectly lead to icing that affects the transportation system. A transportation system operator may also need to monitor and configure the RPU parameters. The operator needs to be able to change the parameters based on the treatment that is being applied on the pavement so accurate readings are measured by the pavement sensors.

2.5.2.2.3 View Pavement Image

A transportation system operator may need to visually inspect pavement conditions and/or verify the reported pavement conditions.

2.5.2.3 Monitor Subsurface Conditions

A transportation system operator may need to retrieve the conditions below the road surface and to retrieve the metadata for the subsurface measurements. The operator may monitor for readings that could lead to road damage and/or affect the onset of icing conditions (e.g., water level table). It supports the transportation system operator's ability to dispatch equipment to address the condition or to provide appropriate warnings.

2.5.2.4 Monitor Human Readings

A transportation system operator may need to retrieve data that was manually observed and entered by field personnel, such as a snow plow operator. This feature allows an operator to verify measured sensor readings.

2.5.2.5 Monitor Water Level

A transportation system operator may need to monitor the depth of water at one or more locations (e.g., over a roadway, in a stream, of a reservoir, etc.). This feature allows an operator to issue flood warnings to travelers, public safety agencies, and maintenance crews, if necessary.

2.5.2.6 Monitor Air Quality and Biohazards

A transportation system operator may need to monitor the current air quality in the vicinity of the ESS and to retrieve the metadata for the air quality measurements. The operator may monitor these measurements to determine whether there are airborne biohazards in the vicinity of the ESS. These measurements are also used to issue ozone alert warnings to the public.

2.5.2.7 Monitor Mobile Weather Profile

A transportation system operator may need to monitor information that is specific to a mobile ESS such as vehicle speed. This feature allows an operator to log the route of the mobile ESS and develop an environmental profile that can be used as an input for weather forecast models or maintenance decision support systems. This may also include odometer readings for verification purposes.

2.5.3 Pavement Treatment System Manager Features

The following identify and describe the various features that may be offered by a Pavement Treatment System Manager. It consists of the following features:

a) manage stationary spray system

 © 2022 AASHTO / ITE / NEMA

b) manage mobile spray system

2.5.3.1 Manage Stationary Spray System

A transportation system operator may need to manage the application of anti-icing or de-icing chemicals through the use of a sprayer connected to a permanent or transportable ESS (e.g., a bridge sprayer). This feature includes the configuration, monitoring, and activation of a permanent or transportable spray system. This feature allows pre-treatment of the roadway pavement, either manually or programmatically, before hazardous conditions occur, or to remedy a hazardous condition.

2.5.3.2 Manage Mobile Spray System

A transportation system operator may need to manage the application of anti-icing or de-icing materials from a mobile pavement treatment system (e.g., a salt truck). This feature allows an operator to monitor and change the rate anti-icing or de-icing materials are applied.

2.5.4 Backward Compatibility Needs

Note: These user needs were moved from Section 2.6 in NTCIP 1204 v03 to conform with NTCIP 8002 Annex B1.

2.5.4.1 Backward Compatible with NTCIP 1204 v01

A newer transportation system component may need to communicate with other components that conform to NTCIP 1204 v01.

2.5.4.2 Backward Compatible with NTCIP 1204 v02

A newer transportation system component may need to communicate with other components that conform to NTCIP 1204 v02.

2.5.4.3 Backward Compatible with NTCIP 1204 v03

A newer transportation system component may need to communicate with other components that conform to NTCIP 1204 v03.

2.6 Security

NTCIP 1204 v04 does not address any security issues. Any security pertaining to protecting the communications with an ESS should be implemented either physically by protecting the communications access points, or logically by enabling security features associated with the underlying communications protocols.

2.7 Relationship to the ITS National Architecture [Informative]

NTCIP 1204 v04 addresses eight (8) National ITS Architecture Flows associated with the operation of an ESS. These flows are:

a) **Environmental Sensors Control:** Data used to configure and control environmental sensors.
b) **Environmental Sensor Data:** Current road conditions (e.g., surface temperature, subsurface temperature, moisture, icing, treatment status) and surface weather conditions (e.g., air temperature, wind speed, precipitation, visibility) as measured and reported by fixed and/or mobile environmental sensors. Operational status of the sensors is also included.
c) **Environmental Conditions:** Current road conditions (e.g., surface temperature, subsurface temperature, moisture, icing, treatment status) and surface weather conditions (e.g., air temperature, wind speed, precipitation, visibility) that are measured by environmental sensors.

© 2022 AASHTO / ITE / NEMA Do Not Copy Without Written Permission

d) **Environmental Probe Data:** Data from vehicle safety and convenience systems that can be used to estimate environmental conditions, including measured air temperature, exterior light status, wiper status, sun sensor status, rain sensor status, traction control status, anti-lock brake status, and other collected vehicle system status and sensor information. The collected data is reported along with the location, heading, and time that the data was collected. Both current data and snapshots of recent events (e.g., traction control or anti-lock brake system activations) may be reported.
e) **Pollution Sensor Control:** Data used to configure and control area pollution and air quality sensors.
f) **Area Pollution Data:** Measured air quality data, including measured levels of atmospheric pollutants including ozone, particulate matter, carbon monoxide, and nitrogen oxides, and operational status of the sensors.
g) **Roadway Treatment System Control:** Control data for remotely located, automated devices that affect the roadway surface (e.g. de-icing applications).
h) **Roadway Treatment System Status:** Current operational status of automated roadway treatment devices (e.g., anti-icing systems).

Each Architecture Flow is associated with one of the following interfaces identified within the National ITS Architecture as:

a) Between a Traffic Management Center (TMS) and a RPU (Roadway Subsystem (RS))
b) Between a Maintenance and Construction Management Center (MCMS) and a RPU (Roadway Subsystem (RS))
c) Between a Maintenance and Construction Vehicle (MCV) and a Maintenance and Construction Management Center (MCMS)
d) Between a Maintenance and Construction Vehicle (MCV) and a RPU (Roadway System (RS))
e) Between a Surface Transportation Weather Service (STWS) and a RPU (Roadway System (RS))
f) Between a Weather Service (WS) and a RPU (Roadway System (RS))
g) Between a Emissions Management Subsystem (EMMS) and a RPU (Roadway System (RS))
h) Between an Information Service Provider (ISP) and a RPU (Roadway System (RS))

The main user need groups (features), as identified in Section 2, are related to the National ITS Architecture Flows as shown in Table 1.

Table 1 User Need Groups and National ITS Architecture Flows

User Need Group	Source	Architecture Flow	Destination
Manage ESS	MCMS	environmental sensors control	RS
	MCV	environmental sensors control	MCMS
	MCV	environmental sensors control	RS
	TMS	environmental sensors control	RS
	STWS	environmental sensors control	RS
	WS	environmental sensors control	RS
	EMMS	pollution sensor control	RS
Monitor weather conditions	MCV	environmental sensors data	MCMS
	RS	environmental sensors data	MCMS
	RS	environmental sensors data	MCV
	RS	environmental sensors data	TMS
	RS	environmental sensors data	STWS
	RS	environmental sensors data	WS
	RS	environmental probe data	ISP
	RS	environmental probe data	MCMS
Monitor pavement	MCV	environmental sensors data	MCMS
	RS	environmental sensors data	MCMS
	RS	environmental sensors data	MCV
	RS	environmental sensors data	TMS
	RS	environmental sensors data	STWS

Do Not Copy Without Written Permission © 2022 AASHTO / ITE / NEMA

User Need Group	Source	Architecture Flow	Destination
	RS	environmental sensors data	WS
	RS	environmental probe data	ISP
	RS	environmental probe data	MCMS
Monitor subsurface conditions	MCV	environmental sensors data	MCMS
	RS	environmental sensors data	MCMS
	RS	environmental sensors data	MCV
	RS	environmental sensors data	TMS
	RS	environmental sensors data	STWS
	RS	environmental sensors data	WS
	RS	environmental probe data	ISP
	RS	environmental probe data	MCMS
Monitor human readings	MCV	environmental sensors data	MCMS
	RS	environmental sensors data	MCMS
	RS	environmental sensors data	MCV
	RS	environmental sensors data	TMS
	RS	environmental sensors data	STWS
	RS	environmental sensors data	WS
	RS	environmental probe data	ISP
	RS	environmental probe data	MCMS
Monitor flood levels	MCV	environmental sensors data	MCMS
	RS	environmental sensors data	MCMS
	RS	environmental sensors data	MCV
	RS	environmental sensors data	TMS
	RS	environmental sensors data	STWS
	RS	environmental sensors data	WS
Monitor air quality	MCV	environmental sensors data	MCMS
	RS	area pollution data	EMMS
Control pavement treatment	MCMS	roadway treatment system control	RS
	RS	roadway treatment system status	MCMS

© 2022 AASHTO / ITE / NEMA Do Not Copy Without Written Permission

Section 3
Functional Requirements [Normative]

Section 3 defines the Functional Requirements based on the user needs identified in Section 2, and provides the reader with:

a) A tutorial
b) **Architectural Requirements**: These requirements relate to the architectural needs defined in Section 2.4.
c) **Data Exchange Requirements:** These requirements relate to the features identified in Section 2.5 that can be realized through a data exchange. For example, this includes the requirement to be able to retrieve weather information.
d) **Supplemental Requirements**: These are additional requirements derived from Section 2 that do not fall into categories b) or c). For example, they include performance requirements and requirements related to filename formats.

Section 3 is intended for all readers, including:

a) transportation operations managers
b) transportation operations personnel
c) transportation engineers
d) system integrators
e) device manufacturers

For the first three categories of readers, Section 3 provides a useful understanding of the details of what NTCIP 1204 v04 requires of an ESS. Section 3.3 may be particularly useful to these readers in preparing procurement specifications and mapping various rows of this table to the more detailed text contained elsewhere.

For the last two categories of readers, Section 3 provides a useful understanding of what is required of equipment conforming to NTCIP 1204 v04. For these readers, Section 3.3 provides a table to document the capabilities of their implementations.

3.1 Tutorial [Informative]

Section 3 defines the requirements that are intended to fulfill the user needs identified in Section 2. This is achieved through the development of a Protocol Requirements List (PRL) that traces each user need to one or more requirements. The details of each requirement are then presented following the PRL. The requirements are presented in three broad categories as follows:

a) **Architectural Requirements**: These requirements define the required behavior of the system in exchanging data across the communications interface, including any restrictions to general architectural requirements, based upon the architectural needs identified in Section 2.
b) **Data Exchange Requirements:** These requirements define the required behavior of the system in exchanging data across the communications interface based on the features identified in Section 2.
c) **Supplemental Requirements:** These requirements define additional requirements of the system that are derived from the architectural and/or data exchange requirements, but are not themselves architectural or data exchange requirements. A given supplemental requirement may relate to multiple architectural and/or data exchange requirements.

Do Not Copy Without Written Permission © 2022 AASHTO / ITE / NEMA

3.2 Scope of the Interface [Informative]

Section 3.2 does not apply in the context of NTCIP 1204 v04.

3.3 Protocol Requirements List (PRL)

The PRL, provided in a table in Section 3.3.3, maps the user needs defined in Section 2 to the requirements defined in Section 3. The PRL can be used by:

a) a user or specification writer to indicate which requirements are to be implemented in a project-specific implementation
b) the protocol implementer, as a checklist to reduce the risk of failure to conform to the standard through oversight
c) the supplier and user, as a detailed indication of the capabilities of the implementation
d) the user, as a basis for initially checking the potential interoperability with another implementation

3.3.1 Notation [Informative]

The following notations and symbols are used to indicate status and conditional status in the PRL within all NTCIP standards. Not all of these notations and symbols may be used within NTCIP 1204 v04.

3.3.1.1 Conformance Symbols

The symbols in Table 2 are used to indicate status in the PRL table (Section 3.3.3).

Table 2 Conformance Symbols

Symbol	Status
M	Mandatory
M.#	Support of every item of the group labeled by the same numeral # required, but only one is active at time
O	Optional
O.# (range)	Part of an option group. Support of the number of items indicated by the '(range)' is required from all options labeled with the same numeral #
C	Conditional
N/A	Not applicable (i.e., logically impossible in the NTCIP 1204 v04 scope)
X	Excluded or prohibited

The O.# (range) notation is used to show a set of selectable options (e.g., O.2 (1..*) would indicate that one or more of the option group 2 options is required to be implemented). Two character combinations are used for dynamic requirements. In this case, the first character refers to the static (implementation) status, and the second refers to the dynamic (use); thus "MO" means "mandatory to be implemented, optional to be used."

© 2022 AASHTO / ITE / NEMA Do Not Copy Without Written Permission

3.3.1.2 Conditional Status Notation

The predicate notations in
Table 3 may be used.

Table 3 Conditional Status Notation

Predicate	Notation
<predicate>:	This notation introduces a single item that is conditional on the <predicate>.
<predicate>::	This notation introduces a table or a group of tables, all of which are conditional on the <predicate>.
(predicate)	This notation introduces the first occurrence of the predicate. The feature associated with this notation is the base feature for all options that have this predicate in their conformance column.

The <predicate>: notation means that the status following it applies only when the PRL states that the feature or features identified by the predicate are supported. In the simplest case, <predicate> is the identifying tag of a single PRL item. The <predicate>:: notation may precede a table or group of tables in a section. When the group predicate is true then the associated section shall be completed. The symbol <predicate> also may be a Boolean expression composed of several indices. "AND", "OR", and "NOT" shall be used to indicate the Boolean logical operations.

The predicates used in NTCIP 1204 v04 map to the sections indicated in Table 4.

Table 4 Predicate Mapping to NTCIP 1204 v04 Section

Predicate	Section
Active	3.6.9
AirLoc	3.5.2.1.20.1
CO	3.5.2.3.6.1
CO2	3.5.2.3.6.10
Friction	3.5.2.1.19.1
HumLoc	3.5.2.1.13.1
Mobile	2.5.1.5.c
NO	3.5.2.3.6.11
NO2	3.5.2.3.6.4
O3	3.5.2.3.6.12
Passive	3.6.10
PaveLoc	3.5.2.1.17.1
PaveMeta	3.5.2.1.4
PM10	3.5.2.3.6.7
PM2.5	3.5.2.3.6.9
Portv03	3.5.4.13
PrecipLoc	3.5.2.1.14.1
PrecipRate	3.5.2.3.2.6.5
PrecipUser	3.5.2.3.2.6.6
PressLoc	3.5.2.1.10.1
PTSLoc	3.5.2.1.21.1
RadLoc	3.5.2.1.15.1
SO2	3.5.2.3.6.5
SubLoc	3.5.2.1.18.1
SubMeta	3.5.2.1.5

Do Not Copy Without Written Permission © 2022 AASHTO / ITE / NEMA

Predicate	Section
Temperature	3.5.2.1.3
TempLoc	3.5.2.1.12.1
WaterLoc	3.5.2.1.1621.1
WaterWarn	3.5.2.1.21.3
Wind	3.5.2.1.2
WindLoc	3.5.2.1.11.1
VisibLoc	3.5.2.1.16.1

3.3.1.3 Support Column Symbols

The support column can be used in a procurement specification to identify the required features for the given procurement or by an implementer to identify which features have been implemented. In either case, the user circles the appropriate answer (Yes, No, or N/A) in the support column. See Table 5.

Table 5 Support Column Entries

Entry	Identifier
Yes	Supported by the implementation.
No	Not supported by the implementation.
NA	Not applicable for the implementation.

3.3.2 Instructions for Completing the PRL [Informative]

In the Support column, each response shall be selected either from the indicated set of responses (for example: Yes / No / N/A), or it shall reference additional items that are to be attached.

If a conditional requirement is inapplicable, use the Not Applicable (N/A) choice. If a mandatory requirement is not satisfied, exception information shall be supplied by entering a reference Xi, where i is a unique identifier, to an accompanying rationale for the non-conformance. When the status is expressed as a two-character combination, the response shall address each element of the requirement; e.g., for the requirement "mo," the possible compliant responses are "yy" or "yn."

> Note: An agency specification can allow for flexibility in a deliverable by leaving the selection in the ’Support’ column blank for a given row. For example, an agency specification could allow for either passive or active icing detectors by selecting ‘Yes’ on PRL line 2.5.2.2.2, and leaving PRL lines 3.5.2.3.3.2 and 3.5.2.3.3.3 blank.

3.3.2.1 Conformance Definition

To claim "Conformance" to NTCIP 1204 v04, the vendor shall minimally fulfill the mandatory requirements as identified in the PRL table (see Section 3.3.3). In addition, a conformant device may offer additional (optional) features, as long as they are conformant with the requirements of NTCIP 1204 v04 and the standards it references.

> Note: The reader and user of NTCIP 1204 v04 is advised that 'conformance' to NTCIP 1204 v04 should not be confused with 'compliance' to a specification. NTCIP 1204 v04 is as broad as possible to allow a very simple ESS implementation to be 'conformant' to NTCIP 1204 v04. An agency specification needs to identify the requirements of a particular project and needs to require the support of those requirements. A specification writer is advised to match the requirements of a project with the corresponding standardized requirements defined in NTCIP 1204 v04 to achieve interoperability. This means that functions and requirements defined as 'optional' in NTCIP 1204 v04 might need to be selected in a specification (in effect made 'mandatory' for the project-specific specification).

© 2022 AASHTO / ITE / NEMA Do Not Copy Without Written Permission

A conformant device may offer additional (optional) features, as long as they are conformant with the requirements of NTCIP 1204 v04 and the standards it references (e.g., NTCIP 1201 v03 and NTCIP 2301 v02). For example a device may also support data that has not been defined by NTCIP 1204 v04; however, when exchanged via one of the NTCIP 2301 v02 protocols, the data shall be properly registered with a valid OBJECT IDENTIFIER under the Global ISO Naming Tree.

> Note: Off-the-shelf interoperability and interchangeability can only be obtained through well documented features broadly supported by the industry as a whole. Designing a system that uses features not defined in a standard or not typically deployed in combination with one another inhibits the goals of interoperability and interchangeability, especially if the documentation of these features is not available for distribution to system integrators. Standards allow the use of additional features to support innovation, which is constantly needed within the industry; but users should be aware of the risks involved with using such features.

3.3.3 Protocol Requirements List (PRL) Table

In addition to the Conformance column and the Support column, which were discussed in Section 3.3.1, the additional columns in the PRL table are the User Need ID and User Need columns, FR ID and Functional Requirement columns and the Additional Specifications column.

a) User Need ID - the number assigned to the user need statement. The user needs are defined within Section 2 and the PRL is based upon the user need sections within that Section.
b) User Need – a short descriptive title identifying the user need.
c) FR ID – the number assigned to the functional requirement statement. The requirements are defined within Section 3 and the PRL references the traces from user needs to these requirements.
d) Functional Requirement – a short descriptive title identifying the functional requirement.
e) Conformance – Indicates if the implementation is mandatory or optional.
f) Support – user selectable to indicate yes or no to the requirement.
g) Additional Specifications - identifies other requirements that are required tobe satisfied, including user selectable range values. The "Additional Specifications" column may (and should) be used by a procurement specification to provide additional notes and requirements for the product to be procured or may be used by an implementer to provide any additional details about the implementation. In some cases, default text already exists in this field, which the user should complete to fully specify the equipment. However, additional text can be added to this field as needed to fully specify a feature.

Do Not Copy Without Written Permission © 2022 AASHTO / ITE / NEMA

Table 6 Protocol Requirements List

Protocol Requirements List (PRL)						
User Need ID	**User Need**	**FR ID**	**Functional Requirement**	**Conformance**	**Support**	**Additional Specifications**
2.4	Architectural Needs			M	Yes	
2.4.1	Generic Architectural Needs			M	Yes	
2.5	Features			M	Yes	
2.5.1	ESS Manager Features			M	Yes	
2.5.1.1	Generic Features			M	Yes	
2.5.1.2	Monitor Door Status			O	Yes / No	
		3.5.1.2.1	Retrieve ESS Door Status	M	Yes / NA	
2.5.1.3	Monitor Power			O	Yes / No	
		3.5.1.2.2	Retrieve Battery Status	O.1 (1..*)	Yes / No / NA	
		3.5.1.2.3	Retrieve Line Volts	O.1 (1..*)	Yes / No / NA	
2.5.1.4	Monitor Mobile Station Data			Mobile:M	Yes / NA	
		3.5.1.3.1	Retrieve Mobile ESS Movement	M	Yes / NA	NTCIP 1204 v04 does not impose any accuracy requirements. Any accuracy requirements should be inserted here. _____ _____ _____
2.5.1.5	Determine ESS Type			M	Yes	
2.5.1.5.a	Permanent			O.2 (1)	Yes / No	
2.5.1.5.b	Transportable			O.2 (1)	Yes / No	
2.5.1.5.c (Mobile)	Mobile			O.2 (1)	Yes / No	
		3.5.1.1.1	Retrieve ESS Characteristics	M	Yes	
2.5.1.6	Monitor the Status of the ESS			O	Yes / No	
		3.5.1.2.4	Retrieve ESS Status	M	Yes / NA	
2.5.2	Sensor Manager Features			O.3 (1..*)	Yes / No	
2.5.2.1	Monitor Weather Conditions			O.4 (1..*)	Yes / No / NA	

© 2022 AASHTO / ITE / NEMA
Copy Per PRL Distribution Permission

Protocol Requirements List (PRL)						
User Need ID	**User Need**	**FR ID**	**Functional Requirement**	**Conformance**	**Support**	**Additional Specifications**
2.5.2.1.1	Monitor Atmospheric Pressure			O.5 (1..*)	Yes / No / NA	
		3.5.2.1.10.1 (PressLoc)	Retrieve Atmospheric Pressure Metadata - Location	O	Yes / No / NA	
		3.5.2.1.10.2	Retrieve Atmospheric Pressure Metadata - Sensor Information	O	Yes / No / NA	
		3.5.2.1.10.3	Configure Atmospheric Pressure Metadata - Location	PressLoc:O	Yes / No / NA	
		3.5.2.3.2.10	Retrieve Atmospheric Pressure	M	Yes / NA	
		3.6.1	Required Number of Atmospheric Pressure Sensors	M	Yes / NA	The ESS shall support at least ____ (1..255:Default=1) atmospheric pressure sensors.
2.5.2.1.2	Monitor Winds			O.5 (1..*)	Yes / No / NA	
		3.5.2.1.2 (Wind)	Retrieve Metadata for Each Wind Sensor - Text Description	O	Yes / No / NA	
		3.5.2.1.11.1 (WindLoc)	Retrieve Metadata for Each Wind Sensor - Location	O	Yes / No / NA	
		3.5.2.1.11.2	Retrieve Metadata for Each Wind Sensor - Sensor Information	O	Yes / No / NA	
		3.5.2.1.11.3	Configure Wind Sensor Metadata - Location	Wind:O; WindLoc:O	Yes / No / NA	
		3.5.2.3.2.2	Retrieve Wind Data	M	Yes / NA	
		3.6.2	Required Number of Wind Sensors	M	Yes / NA	The ESS shall support at least ____ (1..255:Default=1) wind sensors.
2.5.2.1.3	Monitor Air Temperature			O.5 (1..*)	Yes / No / NA	
		3.5.2.1.3 (Temperature)	Retrieve Temperature Sensor Metadata - Height	O	Yes / No / NA	
		3.5.2.1.12.1 (TempLoc)	Retrieve Temperature Sensor Metadata - Location	O	Yes / No / NA	
		3.5.2.1.12.2	Retrieve Temperature Sensor Metadata - Sensor Information	O	Yes / No / NA	

© 2022 AASHTO / ITE / NEMA

Protocol Requirements List (PRL)						
User Need ID	**User Need**	**FR ID**	**Functional Requirement**	**Conformance**	**Support**	**Additional Specifications**
		3.5.2.1.12.3	Configure Temperature Sensor Metadata - Location	Temperature:O; TempLoc:O	Yes / No / NA	
		3.5.2.3.2.3	Retrieve Air Temperature	M	Yes / NA	
		3.5.2.3.2.4	Retrieve Daily Minimum and Maximum Temperature	M	Yes / NA	
		3.6.3	Required Number of Temperature Sensors	M	Yes / NA	The ESS shall support at least ____ (1..255:Default=1) temperature sensors.
2.5.2.1.4	Monitor Relative Humidity			O.5 (1..*)	Yes / No / NA	
		3.5.2.1.13.1 (HumLoc)	Retrieve Humidity Sensor Metadata - Location	O	Yes / No / NA	
		3.5.2.1.13.2	Retrieve Humidity Sensor Metadata - Sensor Information	O	Yes / No / NA	
		3.5.2.1.13.3	Configure Humidity Sensor Metadata - Location	HumLoc:O	Yes / No / NA	
		3.5.2.3.2.11	Retrieve Relative Humidity	M	Yes / NA	
		3.6.4	Required Number of Humidity Sensors	M	Yes / NA	The ESS shall support at least ____ (1..255:Default=1) humidity sensors.
2.5.2.1.5	Monitor Precipitation			O.5 (1..*)	Yes / No / NA	
		3.5.2.1.14.1 (PrecipLoc)	Retrieve Precipitation Sensor Metadata - Location	O	Yes / No / NA	
		3.5.2.1.14.2	Retrieve Precipitation Sensor Metadata - Sensor Information	O	Yes / No / NA	
		3.5.2.1.14.3	Configure Precipitation Sensor Metadata - Location	PrecipLoc:O	Yes / No / NA	
		3.5.2.1.14.4	Configure Precipitation Total User Specified Period	PrecipUser:O	Yes / No / NA	
		3.5.2.3.2.6.4	Retrieve Precipitation Presence	M	Yes / NA	
		3.5.2.3.2.6.5 (PrecipRate)	Retrieve Precipitation Rates	O	Yes / No / NA	
		3.5.2.3.2.6.6	Retrieve Precipitation Totals	O	Yes / No / NA	

© 2022 AASHTO / ITE / NEMA

Protocol Requirements List (PRL)						
User Need ID	**User Need**	**FR ID**	**Functional Requirement**	**Conformance**	**Support**	**Additional Specifications**
		3.5.2.3.2.6.7 (PrecipUser)	Retrieve Precipitation Totals - User Specified	O	Yes / No / NA	
		3.5.2.3.2.6.8	Retrieve Precipitation Type	O	Yes / No / NA	
		3.5.2.3.5.2	Retrieve Precipitation Situation	O	Yes / No / NA	
		3.6.5	Required Number of Precipitation Sensors	M	Yes / NA	The ESS shall support at least ____ (1..255:Default=1) precipitation sensors.
		F.2.2.1.5.1	Set Time	PrecipRate:M	Yes / NA	
		F.2.2.1.5.2	Retrieve Current Time	PrecipRate:M	Yes / NA	
2.5.2.1.6	Monitor Solar Radiation			O.5 (1..*)	Yes / No / NA	
		3.5.2.1.15.1 (RadLoc)	Retrieve Solar Radiation Sensor Metadata - Location	O	Yes / No / NA	
		3.5.2.1.15.2	Retrieve Solar Radiation Sensor Metadata - Sensor Information	O	Yes / No / NA	
		3.5.2.1.15.3	Configure Solar Radiation Sensor Metadata - Location	RadLoc:O	Yes / No / NA	
		3.5.2.3.2.12	Retrieve Solar Radiation	M	Yes / NA	
		3.6.6	Required Number of Solar Radiation Sensors	M	Yes / NA	The ESS shall support at least ____ (1..255:Default=1) solar radiation sensors.
2.5.2.1.7	Monitor Visibility			O.5 (1..*)	Yes / No / NA	
		3.5.2.1.16.1 (VisibLoc)	Retrieve Visibility Sensor Metadata - Location	O	Yes / No / NA	
		3.5.2.1.16.2	Retrieve Visibility Sensor Metadata - Sensor Information	O	Yes / No / NA	
		3.5.2.1.16.3	Configure Visibility Sensor Metadata - Location	VisibLoc:O	Yes / No / NA	
		3.5.2.3.2.8	Retrieve Visibility	M	Yes / NA	
		3.5.2.3.5.4	Retrieve Visibility Situation	O	Yes / No / NA	

© 2022 AASHTO / ITE / NEMA

Protocol Requirements List (PRL)						
User Need ID	**User Need**	**FR ID**	**Functional Requirement**	**Conformance**	**Support**	**Additional Specifications**
		3.5.2.3.5.7	Retrieve Cloud	O	Yes / No / NA	
		3.6.7	Required Number of Visibility Sensors	M	Yes / NA	The ESS shall support at least ____ (1..255:Default=1) visibility sensors.
2.5.2.1.8	View Environmental Image			O	Yes / No	
		3.5.2.1.9	Configure Snapshot Camera	M	Yes / NA	
		3.5.2.3.8	Retrieve Snapshot	M	Yes / NA	
		3.5.2.3.9	Retrieve Snapshot Camera Configuration	M	Yes / NA	
		3.5.2.4.1	Capture Snapshot Image	M	Yes / NA	
		3.5.2.4.2	Delete Snapshot	M	Yes / NA	
		3.6.20	Required Number of Snapshot Cameras	M	Yes / NA	The ESS shall support at least ____ (1..255:Default=1) snapshot cameras.
		3.6.23	Support Camera Number in Filename	O	Yes / No / NA	
		3.6.24	Support Sequence Number in Filename	O	Yes / No / NA	
		3.6.25	Support Date in Filename	O	Yes / No / NA	
		3.6.26	Support Time in Filename	O	Yes / No / NA	
		3.6.27	Support Long Filenames	O	Yes / No / NA	
2.5.2.1.9	Monitor Dewpoint Temperature			O.5 (1..*)	Yes / No	
		3.5.2.3.2.11	Retrieve Relative Humidity	M	Yes / NA	
2.5.2.2	Monitor Pavement			O.4 (1..*)	Yes / No / NA	
2.5.2.2.1	Monitor Pavement Surface Condition			M	Yes / NA	
		3.5.2.1.4 (PaveMeta)	Retrieve Pavement Sensor Metadata	O	Yes / No / NA	
		3.5.2.1.6	Configure Pavement Sensor	PaveMeta:O	Yes / No / NA	
		3.5.2.1.17.1 (PaveLoc)	Retrieve Pavement Sensor Metadata - Location	O	Yes / No / NA	

© 2022 AASHTO / ITE / NEMA

Protocol Requirements List (PRL)						
User Need ID	**User Need**	**FR ID**	**Functional Requirement**	**Conformance**	**Support**	**Additional Specifications**
		3.5.2.1.17.2	Retrieve Pavement Sensor Metadata - Sensor Information	O	Yes / No / NA	
		3.5.2.1.17.3	Configure Pavement Sensor - Location	PaveLoc:O	Yes / No / NA	
		3.5.2.3.3.8	Retrieve Pavement Surface Condition	O	Yes / No / NA	
		3.5.2.3.3.9	Retrieve Forecasted Pavement Surface Condition	O	Yes / No / NA	
		3.5.2.3.3.10	Retrieve Roadway Friction Coefficient	O	Yes / No / NA	
		3.5.2.3.3.11	Retrieve Adjacent Snow Depth	O	Yes / No / NA	
		3.5.2.3.3.12	Retrieve Roadway Snow Depth	O	Yes / No / NA	
		3.5.2.3.3.13	Retrieve Roadway Ice Thickness	O	Yes / No / NA	
		3.6.8	Required Number of Pavement Sensors	M	Yes / NA	The ESS shall support at least ____ (1..255:Default=1) pavement sensors.
2.5.2.2.2	Monitor Icing Conditions			O	Yes / No / NA	
		3.5.2.1.4 (PaveMeta)	Retrieve Pavement Sensor Metadata	O	Yes / No / NA	
		3.5.2.1.6	Configure Pavement Sensor	PaveMeta:O	Yes / No / NA	
		3.5.2.1.8	Configure Passive Ice Detection Logic	Passive:M	Yes / NA	
		3.5.2.1.17.1 (PaveLoc)	Retrieve Pavement Sensor Metadata - Location	O	Yes / No / NA	
		3.5.2.1.17.2	Retrieve Pavement Sensor Metadata - Sensor Information	O	Yes / No / NA	
		3.5.2.1.17.3	Configure Pavement Sensor - Location	PaveLoc:O	Yes / No / NA	
		3.5.2.3.3.2	Retrieve Conditions for Freezing Algorithms - Active	Active:M	Yes / NA	

© 2022 AASHTO / ITE / NEMA

Protocol Requirements List (PRL)						
User Need ID	**User Need**	**FR ID**	**Functional Requirement**	**Conformance**	**Support**	**Additional Specifications**
		3.5.2.3.3.3	Retrieve Conditions for Freezing Algorithms - Passive	Passive:M	Yes / NA	
		3.6.9 (Active)	Active Pavement Treatment Sensors	O.6 (1..*)	Yes / No / NA	
		3.6.10 (Passive)	Passive Pavement Treatment Sensors	O.6 (1..*)	Yes / No / NA	
2.5.2.2.3	View Pavement Image			O	Yes / No	
		3.5.2.1.9	Configure Snapshot Camera	M	Yes / NA	
		3.5.2.3.8	Retrieve Snapshot	M	Yes / NA	
		3.5.2.3.9	Retrieve Snapshot Camera Configuration	M	Yes / NA	
		3.5.2.4.1	Capture Snapshot Image	M	Yes / NA	
		3.5.2.4.2	Delete Snapshot	M	Yes / NA	
		3.6.20	Required Number of Snapshot Cameras	M	Yes / NA	The ESS shall support at least ____ snapshot cameras (1..255:Default=1).
		3.6.23	Support Camera Number in Filename	O	Yes / No / NA	
		3.6.24	Support Sequence Number in Filename	O	Yes / No / NA	
		3.6.25	Support Date in Filename	O	Yes / No / NA	
		3.6.26	Support Time in Filename	O	Yes / No / NA	
		3.6.27	Support Long Filenames	O	Yes / No / NA	
2.5.2.3	Monitor Subsurface Conditions			O.4 (1..*)	Yes / No / NA	
		3.5.2.1.5 (SubMeta)	Retrieve Subsurface Sensor Metadata	O	Yes / No / NA	
		3.5.2.1.7	Configure Subsurface Sensor	SubMeta:O	Yes / No / NA	
		3.5.2.1.18.1 (SubLoc)	Retrieve Subsurface Sensor Metadata - Location	O	Yes / No / NA	
		3.5.2.1.18.2	Retrieve Subsurface Sensor Metadata - Sensor Information	O	Yes / No / NA	

© 2022 AASHTO / ITE / NEMA
Copy Per PRL Distribution Permission

Protocol Requirements List (PRL)						
User Need ID	**User Need**	**FR ID**	**Functional Requirement**	**Conformance**	**Support**	**Additional Specifications**
		3.5.2.1.18.3	Configure Subsurface Sensor - Location	SubLoc:O	Yes / No / NA	
		3.5.2.3.4.1	Retrieve Subsurface Temperature	M	Yes / NA	
		3.5.2.3.4.2	Retrieve Subsurface Moisture	O	Yes / No / NA	
		3.6.11	Required Number of Subsurface Sensors	M	Yes / NA	The ESS shall support at least ____ (1..255:Default=1) subsurface sensors.
2.5.2.4	Monitor Human Readings			O.4 (1..*)	Yes / No / NA	
		3.5.2.3.5.1	Retrieve Wind Situation	M	Yes / NA	
		3.5.2.3.5.2	Retrieve Precipitation Situation	M	Yes / NA	
		3.5.2.3.5.4	Retrieve Visibility Situation	M	Yes / NA	
		3.5.2.3.5.5	Retrieve Ground State	O	Yes / No / NA	
		3.5.2.3.5.7	Retrieve Cloud Situation	M	Yes / NA	
		3.5.2.3.5.9	Retrieve Pavement State	O	Yes / No / NA	
2.5.2.5	Monitor Water Level			O.4 (1..*)	Yes / No / NA	
		3.5.2.1.20.1 (WaterLoc)	Retrieve Water Level Metadata - Location	O	Yes / No / NA	
		3.5.2.1.20.2	Retrieve Water Level Metadata - Sensor Information	O	Yes / No / NA	
		3.5.2.1.20.3 (WaterWarn)	Retrieve Water Level Metadata - Warning Level	O	Yes / No / NA	
		3.5.2.1.20.4	Configure Water Level Metadata - Location	WaterLoc:O	Yes / No / NA	
		3.5.2.1.20.5	Configure Water Level Metadata - Warning Level	WaterWarn:O	Yes / No / NA	
		3.5.2.3.7	Retrieve Water Level	M	Yes / NA	
		3.6.22	Required Number of Water Level Sensors	M	Yes / NA	The ESS shall support at least ____ (1..255:Default=1) water level sensors.
2.5.2.6	Monitor Air Quality and Biohazards			O.4 (1..*)	Yes / No / NA	

© 2022 AASHTO / ITE / NEMA

Protocol Requirements List (PRL)						
User Need ID	**User Need**	**FR ID**	**Functional Requirement**	**Conformance**	**Support**	**Additional Specifications**
		3.5.2.1.19.1 (AirLoc)	Retrieve Air Quality Sensor Metadata - Location	O	Yes / No / NA	
		3.5.2.1.19.2	Retrieve Air Quality Sensor Metadata - Sensor Information	O	Yes / No / NA	
		3.5.2.1.19.3	Configure Air Quality Sensor Metadata - Location	AirLoc:O	Yes / No / NA	
		3.5.2.3.6.1 (CO)	Retrieve Carbon Monoxide Reading	O.7 (1..*)	Yes / No / NA	
		3.5.2.3.6.4 (NO2)	Retrieve Nitrogen Dioxide Reading	O.7 (1..*)	Yes / No / NA	
		3.5.2.3.6.5 (SO2)	Retrieve Sulfur Dioxide Reading	O.7 (1..*)	Yes / No / NA	
		3.5.2.3.6.7 (PM10)	Retrieve Small Particulate Matter Reading	O.7 (1..*)	Yes / No / NA	
		3.5.2.3.6.9 (PM2.5)	Retrieve Particulate Matter (2.5) Reading	O.7 (1..*)	Yes / No / NA	
		3.5.2.3.6.10 (CO2)	Retrieve Carbon Dioxide Reading	O.7 (1..*)	Yes / No / NA	
		3.5.2.3.6.11 (NO)	Retrieve Nitric Oxide Reading	O.7 (1..*)	Yes / No / NA	
		3.5.2.3.6.12 (O3)	Retrieve Ozone Reading	O.7 (1..*)	Yes / No / NA	
		3.6.13	Required Number of Carbon Monoxide Sensors	CO:O	Yes / No / NA	The ESS shall support at least ____ (Default=1) carbon monoxide sensors.
		3.6.14	Required Number of Carbon Dioxide Sensors	CO2:O	Yes / No / NA	The ESS shall support at least ____ (Default=1) carbon dioxide sensors.
		3.6.15	Required Number of Nitric Oxide Sensors	NO:O	Yes / No / NA	The ESS shall support at least ____ (Default=1) nitric oxide sensors.
		3.6.16	Required Number of Nitrogen Dioxide Sensors	NO2:O	Yes / No / NA	The ESS shall support at least ____ (Default=1) nitrogen dioxide sensors.

© 2022 AASHTO / ITE / NEMA

Protocol Requirements List (PRL)						
User Need ID	**User Need**	**FR ID**	**Functional Requirement**	**Conformance**	**Support**	**Additional Specifications**
		3.6.17	Required Number of Sulfur Dioxide Sensors	SO2:O	Yes / No / NA	The ESS shall support at least ____ (Default=1) sulfur dioxide sensors.
		3.6.18	Required Number of Ozone Sensors	O3:O	Yes / No / NA	The ESS shall support at least ____ (Default=1) ozone sensors.
		3.6.19	Required Number of Small Particulate Matter Sensors	PM10:O	Yes / No / NA	The ESS shall support at least ____ (Default=1) small particulate matter sensors.
		3.6.28	Required Number of Small Particulate Matter (2.5) Sensors	PM2.5:O	Yes / No / NA	The ESS shall support at least ____ (Default=1) particulate matter (2.5) sensors.
2.5.2.7	Monitor Mobile Weather Profile			O	Yes / No / NA	
		3.5.2.3.10	Retrieve Sensor Profile with Mobile Sources	M	Yes / NA	
		F.2.1.2.1	Retrieve Current Configuration of Logging Service	M	Yes / NA	
		F.2.1.2.2	Configure Logging Service	M	Yes / NA	
		F.2.1.2.3	Retrieve Logged Data	M	Yes / NA	
		F.2.1.2.4	Clear Log	M	Yes / NA	
		F.2.1.2.5	Retrieve Capabilities of Event Logging Service	M	Yes / NA	
		F.2.1.2.6	Retrieve Total Number of Logged Events	M	Yes / NA	
		F.2.2.1.5.1	Set Time	M	Yes / NA	
		F.2.2.1.5.2	Retrieve Current Time	M	Yes / NA	
2.5.3	Pavement Treatment System Manager Features			O.3 (1..*)	Yes / No / NA	
2.5.3.1	Manage Stationary Spray System			Mobile:X; O	Yes / No / NA	The ESS shall support at least ____ (1..255: Default=1) pavement treatment products.
		3.5.2.1.21.1 (PTSLoc)	Retrieve Pavement Treatment System Metadata - Location	O	Yes / No / NA	

© 2022 AASHTO / ITE / NEMA

Protocol Requirements List (PRL)						
User Need ID	**User Need**	**FR ID**	**Functional Requirement**	**Conformance**	**Support**	**Additional Specifications**
		3.5.2.1.21.2	Retrieve Pavement Treatment Metadata - System Information	O	Yes / No / NA	
		3.5.2.1.21.3	Configure Pavement Treatment System Metadata - Location	PTSLoc:O	Yes / No / NA	
		3.5.3.1.1	Retrieve Stationary Pavement Treatment Configuration	M	Yes / NA	
		3.5.3.1.2	Configure Stationary Pavement Treatment System	M	Yes / NA	
		3.5.3.2.1	Retrieve Pavement Treatment Status	M	Yes / NA	
		3.5.3.4.1	Set PTS Operational Mode	M	Yes / NA	
		3.5.3.4.2	Manually Activate PTS Sprayer	M	Yes / NA	
		3.6.12	Required Number of Pavement Treatment Products	M	Yes / NA	The ESS shall support at least ____ pavement treatment products (1..255).
2.5.3.2	Manage Mobile Spray System			Mobile: O	Yes / No / NA	
		3.5.2.1.21.1 (PTSLoc)	Retrieve Pavement Treatment System Metadata - Location	O	Yes / No / NA	
		3.5.2.1.21.2	Retrieve Pavement Treatment Metadata - System Information	O	Yes / No / NA	
		3.5.2.1.21.3	Configure Pavement Treatment System Metadata - Location	PTSLoc:O	Yes / No / NA	
		3.5.3.1.4	Configure Mobile Pavement Treatment System	O	Yes / No / NA	
		3.5.3.1.5	Retrieve Mobile Pavement Treatment Configuration	O	Yes / No / NA	
		3.5.3.2.1	Retrieve Pavement Treatment Status	M	Yes / NA	
		3.5.3.3.1	Retrieve Pavement Treatment Profile with Mobile Sources	O	Yes / No / NA	
		3.5.3.4.1	Set PTS Operational Mode	O	Yes / No / NA	
		3.5.3.4.2	Manually Activate PTS Sprayer	O	Yes / No / NA	

© 2022 AASHTO / ITE / NEMA

Protocol Requirements List (PRL)						
User Need ID	**User Need**	**FR ID**	**Functional Requirement**	**Conformance**	**Support**	**Additional Specifications**
2.5.4	Backward Compatibility Needs			O	Yes / No	
2.5.4.1	Backward Compatible with NTCIP 1204 v01			O	Yes / No / NA	
		3.5.4.1	NTCIP 1204 v01 Wind Sensor Meta Data	O	Yes / No / NA	
		3.5.4.2	NTCIP 1204 v01 Average Wind Sensor Data	O	Yes / No / NA	
		3.5.4.3	NTCIP 1204 v01 Spot Wind Sensor Data	O	Yes / No / NA	
		3.5.4.4	NTCIP 1204 v01 Wind Gust Data	O	Yes / No / NA	
		3.5.4.5	NTCIP 1204 v01 Wind Situation	O	Yes / No / NA	
		3.5.4.6	NTCIP 1204 v01 Water Depth	O	Yes / No / NA	
		3.5.4.7	NTCIP 1204 v01 Solar Radiation	O	Yes / No / NA	
		3.5.4.8	NTCIP 1204 v01 Surface Water Depth	O	Yes / No / NA	
		3.5.4.9	NTCIP 1204 v01 Surface Conductivity	O	Yes / No / NA	
		3.5.4.13	NTCIP 1204 v03 Retrieve External Port Information	O	Yes / No / NA	
		3.5.4.14	NTCIP 1204 v03 Configure Port Information	O	Yes / No / NA	
		3.5.4.15	NTCIP 1204 v03 Monitor Status of External Device	O	Yes / No / NA	
		3.5.4.16	NTCIP 1204 v03 Control External Device	O	Yes / No / NA	
		3.5.4.19	NTCIP 1204 v01-v03 Atmospheric Pressure Height	O	Yes / No / NA	
		3.5.4.21	NTCIP 1204 v01-v03 Atmospheric Pressure	O	Yes / No / NA	

© 2022 AASHTO / ITE / NEMA

Protocol Requirements List (PRL)						
User Need ID	**User Need**	**FR ID**	**Functional Requirement**	**Conformance**	**Support**	**Additional Specifications**
		3.5.4.22	NTCIP 1204 v01-v03 Humidity	O	Yes / No / NA	
		3.5.4.23	NTCIP 1204 v01-v03 Precipitation Presence	O	Yes / No / NA	
		3.5.4.24	NTCIP 1204 v01-v03 Precipitation Rates	O	Yes / No / NA	
		3.5.4.25	NTCIP 1204 v01-v03 Precipitation Totals	O	Yes / No / NA	
		3.5.4.28	NTCIP 1204 v01-v03 Pavement Surface Condition	O	Yes / No / NA	
		3.5.4.34	NTCIP 1204 v01-v03 Cloud Situation	O	Yes / No / NA	
2.5.4.2	Backward Compatible with NTCIP 1204 v02			O	Yes / No / NA	
		3.5.4.10	NTCIP 1204 v02 Station Meta Data Block	O	Yes / NA	
		3.5.4.11	NTCIP 1204 v02 Weather Block	O	Yes / No / NA	
		3.5.4.12	NTCIP 1204 v02 Pavement Block	O	Yes / No / NA	
		3.5.4.13	NTCIP 1204 v03 Retrieve External Port Information	O	Yes / No / NA	
		3.5.4.14	NTCIP 1204 v03 Configure Port Information	O	Yes / No / NA	
		3.5.4.15	NTCIP 1204 v03 Monitor Status of External Device	O	Yes / No / NA	
		3.5.4.16	NTCIP 1204 v03 Control External Device	O	Yes / No / NA	
		3.5.4.19	NTCIP 1204 v01-v03 Atmospheric Pressure Height	O	Yes / No / NA	
		3.5.4.21	NTCIP 1204 v01-v03 Atmospheric Pressure	O	Yes / No / NA	
		3.5.4.22	NTCIP 1204 v01-v03 Humidity	O	Yes / No / NA	

© 2022 AASHTO / ITE / NEMA
Copy Per PRL Distribution Permission

Protocol Requirements List (PRL)						
User Need ID	**User Need**	**FR ID**	**Functional Requirement**	**Conformance**	**Support**	**Additional Specifications**
		3.5.4.23	NTCIP 1204 v01-v03 Precipitation Presence	O	Yes / No / NA	
		3.5.4.24	NTCIP 1204 v01-v03 Precipitation Rates	O	Yes / No / NA	
		3.5.4.25	NTCIP 1204 v01-v03 Precipitation Totals	O	Yes / No / NA	
		3.5.4.28	NTCIP 1204 v01-v03 Pavement Surface Condition	O	Yes / No / NA	
		3.5.4.30	NTCIP 1204 v01-v03 Adjacent Snow Depth	O	Yes / No / NA	
		3.5.4.31	NTCIP 1204 v01-v03 Roadway Snow Depth	O	Yes / No / NA	
		3.5.4.32	NTCIP 1204 v01-v03 Roadway Ice Thickness	O	Yes / No / NA	
		3.5.4.34	NTCIP 1204 v01-v03 Cloud Situation	O	Yes / No / NA	
		3.5.4.35	NTCIP 1204 v01-v03 Ground State	O	Yes / No / NA	
		3.5.4.36	NTCIP 1204 v01-v03 Pavement State	O	Yes / No / NA	
2.5.4.3	Backward Compatible with NTCIP 1204 v03			O	Yes / No / NA	
		3.5.4.13 (Portv03)	NTCIP 1204 v03 Retrieve External Port Information	O	Yes / No / NA	The ESS shall support at least ____ binary analog output ports (1..255).
		3.5.4.14	NTCIP 1204 v03 Configure Port Information	Portv03:O	Yes / No / NA	
		3.5.4.15	NTCIP 1204 v03 Monitor Status of External Device	Portv03:O	Yes / No / NA	
		3.5.4.16	NTCIP 1204 v03 Control External Device	Portv03:O	Yes / No / NA	
		3.5.4.17	NTCIP 1204 v03 Station Metadata Block	O	Yes / No / NA	

Copy Per PRL Distribution Permission
© 2022 AASHTO / ITE / NEMA

Protocol Requirements List (PRL)						
User Need ID	**User Need**	**FR ID**	**Functional Requirement**	**Conformance**	**Support**	**Additional Specifications**
		3.5.4.18	NTCIP 1204 v03 Mobile ESS Data Block	O	Yes / No / NA	
		3.5.4.19	NTCIP 1204 v01-v03 Atmospheric Pressure Height	O	Yes / No / NA	
		3.5.4.20	NTCIP 1204 v03 Weather Profile with Mobile Sources	O	Yes / No / NA	
		3.5.4.21	NTCIP 1204 v01-v03 Atmospheric Pressure	O	Yes / No / NA	
		3.5.4.22	NTCIP 1204 v01-v03 Humidity	O	Yes / No / NA	
		3.5.4.23	NTCIP 1204 v01-v03 Precipitation Presence	O	Yes / No / NA	
		3.5.4.24	NTCIP 1204 v01-v03 Precipitation Rates	O	Yes / No / NA	
		3.5.4.25	NTCIP 1204 v01-v03 Precipitation Totals	O	Yes / No / NA	
		3.5.4.26	NTCIP 1204 v03 Solar Radiation	O	Yes / No / NA	
		3.5.4.27	NTCIP 1204 v03 Weather Block	O	Yes / No / NA	
		3.5.4.28	NTCIP 1204 v01-v03 Pavement Surface Condition	O	Yes / No / NA	
		3.5.4.29	NTCIP 1204 v03 Pavement Condition Block	O	Yes / No / NA	
		3.5.4.33	NTCIP 1204 v03 Subsurface Condition Block	O	Yes / No / NA	
		3.5.4.34	NTCIP 1204 v01-v03 Cloud Situation	O	Yes / No / NA	
		3.5.4.37	NTCIP 1204 v03 Air Quality Block	O	Yes / No / NA	
		3.5.4.38	NTCIP 1204 v03 Mobile Pavement Treatment Block	O	Yes / No / NA	

© 2022 AASHTO / ITE / NEMA
Copy Per PRL Distribution Permission

Protocol Requirements List (PRL)						
User Need ID	**User Need**	**FR ID**	**Functional Requirement**	**Conformance**	**Support**	**Additional Specifications**
		3.5.4.39	NTCIP 1204 v01-03 Carbon Dioxide Reading	O	Yes / No / NA	
		3.5.4.40	NTCIP 1204 v01-03 Nitric Oxide Reading	O	Yes / No / NA	
		3.5.4.41	NTCIP 1204 v01-03 Ozone Reading	O	Yes / No / NA	
F.1.1	Generic Architectural Needs					
F.1.1.1	Provide Live Data			M	Yes	
		F.2.1.1.1	Retrieve Data	M	Yes	
		F.2.1.1.2	Deliver Data	M	Yes	
		F.2.1.1.3	Explore Data	M	Yes	
		3.6.21	Maximum Response Time for Requests	M	Yes	The Response Time for all requests shall be ___ milliseconds (25-500: Default=100).
F.1.1.2 (Compressed)	Provide Compressed Data			Mobile:M; O	Yes / No	
		3.6.21	Maximum Response Time for Requests	M	Yes	The Response Time for all requests shall be ___ milliseconds (25-500: Default=100).
F.1.1.3	Provide Off-line Log Data			O	Yes / No	
		F.2.1.2.1	Retrieve Current Configuration of Logging Service	M	Yes / NA	
		F.2.1.2.2	Configure Logging Service	M	Yes / NA	
		F.2.1.2.3	Retrieve Logged Data	M	Yes / NA	
		F.2.1.2.4	Clear Log	M	Yes / NA	
		F.2.1.2.5	Retrieve Capabilities of Event Logging Service	M	Yes / NA	
		F.2.1.2.6	Retrieve Total Number of Logged Events	M	Yes / NA	
		F.2.2.1.5.1	Set Time	M	Yes / NA	

Copy Per PRL Distribution Permission
© 2022 AASHTO / ITE / NEMA

Protocol Requirements List (PRL)						
User Need ID	**User Need**	**FR ID**	**Functional Requirement**	**Conformance**	**Support**	**Additional Specifications**
		F.2.2.1.5.2	Retrieve Current Time	M	Yes / NA	
		F.2.3.1.1	Record and Timestamp Events	M	Yes / NA	
		F.2.3.1.2	Support a Number of Event Classes	M	Yes / NA	The ESS shall support at least ____ event classes.
		F.2.3.1.3	Support a Number of Event Types to Monitor	M	Yes / NA	The ESS shall support at least ____ event types.
		F.2.3.1.4.1	Support On-Change Events	M	Yes / NA	
		F.2.3.1.4.2	Support Greater Than Events	M	Yes / NA	
		F.2.3.1.4.3	Support Less Than Events	M	Yes / NA	
		F.2.3.1.4.4	Support Hysteresis Events	M	Yes / NA	
		F.2.3.1.4.5	Support Periodic Events	M	Yes / NA	
		F.2.3.1.4.6	Support Bit Flag Events	M	Yes / NA	
		F.2.3.1.5	Support Event Monitoring on Any Data	M	Yes / NA	
		F.2.3.1.6	Support a Number of Events to Store in Log	M	Yes / NA	The ESS shall be capable of storing at least ____ events in the event log file.
		3.6.21	Maximum Response Time for Requests	M	Yes / NA	The Response Time for all requests shall be ___ milliseconds (25-500: Default=100).
F.1.1.4	Condition-based Exception Reporting			N/A	N/A	
		F.2.1.3.1	Enable/Disable Exception Reporting	M	Yes	
		F.2.1.3.2.1	Configure a Monitored (Watch) Object	M	Yes	
		F.2.1.3.2.2 (Watch)	Configure a Monitored Group of Objects (Watch Block)	M	Yes	
		F.2.1.3.3.1	Configure a Report Object	M	Yes	
		F.2.1.3.3.2 (Report)	Configure a Report Group of Objects (Block)	M	Yes	

© 2022 AASHTO / ITE / NEMA
Copy Per PRL Distribution Permission

Protocol Requirements List (PRL)						
User Need ID	**User Need**	**FR ID**	**Functional Requirement**	**Conformance**	**Support**	**Additional Specifications**
		F.2.1.3.4	Configure Exception Reporting Destination	M	Yes	
		F.2.1.3.5	Configure Exception Reporting Community	M	Yes	
		F.2.1.3.6.1 (TrapAck)	Configure Exception Reporting Acknowledgement	O.8 (1..*)	Yes / No	
		F.2.1.3.6.2	Configure Exception Reporting Aggregation	O.8 (1..*)	Yes / No	
		F.2.1.3.6.3 (TrapQueue)	Configure Exception Reporting Queue	O.8 (1..*)	Yes / No	
		F.2.1.3.6.4	Configure Exception Reporting (Forced)	O.8 (1..*)	Yes / No	
		F.2.1.3.6.5	Configure Exception Reporting Communications	M	Yes	
		F.2.1.3.6.6 (AntiStream)	Configure Exception Reporting Communications	O	Yes / No	
		F.2.1.3.7	Determine Watch Block Capabilities	Watch:M	Yes / NA	
		F.2.1.3.8	Determine Report Block Capabilities	Report:M	Yes / NA	
		F.2.1.3.9	Determine Exception Reporting Trap Channel Capabilities	M	Yes	
		F.2.1.3.10	Determine Exception Reporting Aggregation Capabilities	M	Yes	
		F.2.1.3.11	Determine Event Reporting Latency	M	Yes	
		F.2.1.3.12	Monitor Communications Link State	M	Yes	
		F.2.1.3.13.1	Monitor Exception Based Communications Link Error	M	Yes	

© 2022 AASHTO / ITE / NEMA

Protocol Requirements List (PRL)						
User Need ID	**User Need**	**FR ID**	**Functional Requirement**	**Conformance**	**Support**	**Additional Specifications**
		F.2.1.3.13.2	Monitor Exception Based Maximum Rate Exceeded	AntiStream:M	Yes / NA	
		F.2.1.3.13.3	Monitor Exception Based Queue Full Error	TrapQueue:M	Yes / NA	
		F.2.1.3.14	Monitor Exception Based Transmissions	M	Yes	
		F.2.1.3.15	Monitor Number of Lost Queued Exception Based Reports	TrapQueue:M	Yes / NA	
		F.2.1.3.16	Monitor Number of Exception Based Events	M	Yes	
		F.2.1.3.17	Monitor Exception Based Data	M	Yes	
		F.2.1.3.18	Clear Event Class	O	Yes / No	
		F.2.1.3.19	Clear Event Configuration	O	Yes / No	
		F.2.1.3.20	Clear Event Log Table	O	Yes / No	
		F.2.1.3.21	Clear Report Objects	O	Yes / No	
		F.2.1.3.22	Clear Report Blocks	O	Yes / No	
		F.2.1.3.23	Clear Watch Objects	O	Yes / No	
		F.2.1.3.24	Clear Watch Blocks	O	Yes / No	
		F.2.1.3.25	Clear Exception Based Reporting Tables	O	Yes / No	
		F.2.1.3.26	Reset a Communications Link	TrapAck:O	Yes / No / NA	
		3.6.29	Maximum Transmission Start Time	M	Yes	The Maximum Transmission Start Time for all reports shall be ___ milliseconds (Default=100).
		F.2.3.3	Atomic Operations	M	Yes	
F.1.2	Generic Features					
F.1.2.1	Retrieve Device Identity			M	Yes	

© 2022 AASHTO / ITE / NEMA

Protocol Requirements List (PRL)						
User Need ID	**User Need**	**FR ID**	**Functional Requirement**	**Conformance**	**Support**	**Additional Specifications**
		3.5.1.1.1	Retrieve ESS Characteristics	M	Yes	
		3.5.1.1.2	Retrieve Compressed Station Metadata [Version 03 - Deprecated in v04]			
		3.5.1.1.3	Configure ESS Manager	M	Yes	
		F.2.2.1.1	Retrieve Device Component Information	M	Yes	
		F.2.2.1.2	Retrieve Device Configuration Identifier	M	Yes	
		F.2.2.1.3	Retrieve Supported Standards	M	Yes	
		F.2.2.1.4	Retrieve System Name	O	Yes / No	
F.1.2.2	Control External Devices			O	Yes / No	
		F.2.2.1.6	Retrieve External Port Information	M	Yes / NA	
		F.2.2.1.7	Configure Port Information	M	Yes / NA	
		F.2.2.2.1	Monitor Status of External Device	M	Yes / NA	
		F.2.2.4.1	Control External Device	M	Yes / NA	
		F.2.3.2	Required Number of Auxiliary Ports	M	Yes / NA	The ESS shall support at least ____ (1..255:Default=1) binary analog output ports.

© 2022 AASHTO / ITE / NEMA

3.4 Architectural Requirements

There are no unique architectural requirements defined in NTCIP 1204 v04. The architectural needs are fully met through the generic architectural requirements defined in Annex F.2.1.

3.5 Data Exchange and Operational Environment Requirements

Data exchange requirements for ESS follow.

3.5.1 ESS Manager Requirements

Requirements for managing an ESS Manager follow.

3.5.1.1 ESS Configuration Requirements

Requirements for configuring an ESS Manager follow.

3.5.1.1.1 Retrieve ESS Characteristics

Upon request, the ESS shall return the ESS type, category, and location. This information consists of:

a) the ESS type. The ESS type indicates if the sensor data is collected electronically or mechanically, or the data are human readings. The valid ESS types are automatic, staffed, reserved, or missing value (unknown). The ESS type can be a hybrid station (i.e., data is collected electronically/mechanically and by humans), in which case both automatic and staffed types are returned;
b) the category of ESS. Valid ESS categories are permanent, transportable, mobile, or other; and
c) the location of the ESS, which consists of the latitude, longitude, height and a textual description of the location. The latitude and longitude are in microdegrees (10^{-6} degrees). The height of the ESS is in meters above mean sea level, and is measured to the base of the structure for a permanent ESS, to the ground surface on which the ESS resides for a transportable ESS, and to the surface under the vehicle for a mobile ESS.

3.5.1.1.2 Retrieve Compressed Station Metadata [Version 03 - Deprecated in v04]

Upon request, the ESS shall return the following information about the station:

a) category
b) type of station
c) location of ESS
d) location of sensors
e) pavement treatment information

Note: This requirement was used in NTCIP 1204 v03, but has been deprecated in NTCIP 1204 v04. See Annex D for further information regarding this change from NTCIP v03 to NTCIP 1204 v04.

3.5.1.1.3 Configure ESS Manager

Upon request, the ESS shall store the textual description of the ESS location, as provided within the request.

3.5.1.2 ESS Status Monitoring Requirements

Requirements for monitoring the status of an ESS Manager follow.

© 2022 AASHTO / ITE / NEMA Do Not Copy Without Written Permission

3.5.1.2.1 Retrieve ESS Door Status

Upon request, the ESS shall return an indication as to whether any doors related to the ESS (e.g., cabinet doors, housing doors, etc.) are open.

3.5.1.2.2 Retrieve Battery Status

Upon request, the ESS shall return the charge status of the battery in percent, with 100% representing a full charge.

3.5.1.2.3 Retrieve Line Volts

Upon request, the ESS shall return the voltage, in Volts Root Mean Squared, on the incoming A/C power line.

3.5.1.2.4 Retrieve ESS Status

Upon request, the ESS shall return an indication if an error condition has been detected on the ESS hardware or software. The error conditions reported are:

a) Watchdog failure
b) Power error
c) Sensor failure

A watchdog is a circuit that monitors the ESS software and firmware for any stall condition. While the ESS is powered on, the software polls the watchdog and resets the timing circuitry. A watchdog failure occurs if the watchdog circuitry times out without being reset by the software. Note: reporting of a watchdog failure assumes that the main process itself is not in a stall condition.

A power error is reported an irregular occurrence is detected with the primary power source. Examples or an irregular occurrence includes when the charge status of the battery drops below a certain percentage or the voltage on the incoming A/C power line drops below or exceeds a "normal" operating range.

A sensor failure occurs when a condition has been detected that prevents the proper reporting of sensor values (e.g., a dirty lens) or the sensor values has been deemed invalid or suspect.

3.5.1.3 ESS Data Retrieval Requirements

Requirements for retrieving data from an ESS Manager follow.

3.5.1.3.1 Retrieve Mobile ESS Movement

Upon request, the ESS shall return the following information about the mobile platform:

a) the location of the mobile platform, consisting of the latitude, longitude, and height. The latitude and longitude are in microdegrees (10^{-6} degrees). The height of the mobile platform (ESS) is in meters above mean sea level, and is measured to the surface under the vehicle;
b) the speed of the mobile platform in kilometers per hour;
c) the bearing (direction of travel) of the mobile platform in degrees, measured clockwise from True North; and
d) the distance traveled, in meters, by the mobile platform from a reference point. This information is used to create a profile between the observations collected and the distance traveled. This may be the odometer reading on the mobile platform.

Do Not Copy Without Written Permission © 2022 AASHTO / ITE / NEMA

3.5.1.3.2 Retrieve Mobile Treatment Information [Obsolete]

Upon request, the ESS shall return the pavement treatment that the mobile platform is dispersing.

> Note: This requirement is effectively deleted from NTCIP 1204 v03. It was determined to be redundant with Section 3.5.3.1.3 and is more appropriately defined there (i.e., according to the terms used in NTCIP 1204 v03, the ESS Manager does not include pavement treatment information; that information would be stored in the PTS Manager.)

3.5.1.3.3 Retrieve Compressed Mobile ESS Data [Version 03 - Deprecated in v04]

Upon request, the ESS shall return the following information about the station in a compressed form:

a) location of ESS
b) speed of ESS
c) pavement treatment information

> Note: This requirement was used in NTCIP 1204 v03, but has been deprecated in NTCIP 1204 v04. See Annex D for further information regarding this change from v03 to v04 of NTCIP 1204.

3.5.1.4 ESS Control Requirements

There are no control requirements for the ESS Manager.

3.5.2 Sensor Manager Requirements

Requirements for managing a Sensor Manager follow.

3.5.2.1 Sensor Configuration Requirements

Requirements for configuring a Sensor Manager follow.

> Note: A Sensor Manager may also require a user to configure proprietary data during initial set-up.

3.5.2.1.1 Retrieve Atmospheric Pressure Height [Versions 01 to 03 Only - Deprecated in v04]

Upon request, the ESS shall return the relative height of the atmospheric pressure sensor.

> Note: This requirement was used in NTCIP 1204 v01 to v03, but has been replaced in NTCIP 1204 v04. NTCIP 1204 v04 adds support for multiple atmospheric pressure sensors and additional metadata. These additions are found in Section 3.5.2.1.10. See Annex D for further information regarding this change from v03 to v04 of NTCIP 1204.

3.5.2.1.2 Retrieve Metadata for Each Wind Sensor - Text Description

Upon request, the ESS shall return the number of wind sensors connected to the ESS and the following information for each wind sensor:

a) a textual description of the wind sensor location; and
b) the relative height of the wind sensor to the reference height of the ESS (station) in meters.

3.5.2.1.3 Retrieve Temperature Sensor Metadata - Height

Upon request, the ESS shall return the number of air temperature sensors connected to the ESS and the relative height of each air temperature sensor to the reference height of the ESS (station) in meters.

© 2022 AASHTO / ITE / NEMA Do Not Copy Without Written Permission

3.5.2.1.4 Retrieve Pavement Sensor Metadata

Upon request, the ESS shall return the number of pavement sensors connected to the ESS and the following information for each pavement sensor:

a) a textual description of the location that the pavement sensor is monitoring;
b) the type of pavement the sensor is monitoring. Valid values are asphalt, open grade asphalt, concrete, steel bridge, concrete bridge, asphalt overlay bridge, timber bridge, other and unknown;
c) the relative height of the pavement surface at the location being monitored to the reference height of the ESS (station) in meters;
d) an indication of the skyview factor, in percent, to which the monitored pavement is subjected. A value of 100 (percent) indicates a fully visible sky; and
e) an indication of the sensor technology used. Valid values are contactPassive, contactActive, infrared, radar, vibrating, microwave, laser, and other.

3.5.2.1.5 Retrieve Subsurface Sensor Metadata - Text Description

Upon request, the ESS shall return the number of subsurface sensors connected to the ESS and the following information for each subsurface sensor:

a) a textual description of the location that the subsurface sensor is monitoring;
b) the type of subsurface the subsurface sensor is monitoring. Valid values are concrete, asphalt, open graded asphalt, gravel, clay, loam, sand, permafrost, various aggregates, air, other, and unknown; and
the depth of the subsurface sensor location, in centimeters below the pavement surface.

3.5.2.1.6 Configure Pavement Sensor

Upon request, the ESS shall store configuration information for a specified pavement sensor. The configuration information includes:

a) a textual description of the location that the pavement sensor is monitoring;
b) the type of pavement the sensor is monitoring. Valid values are asphalt, open grade asphalt, concrete, steel bridge, concrete bridge, asphalt overlay bridge, timber bridge, other and unknown; and
c) an indication of the skyview factor, in percent, to which the monitored pavement is subjected. A value of 100 (percent) indicates a fully visible sky.

3.5.2.1.7 Configure Subsurface Sensor - Text Description

Upon request, the ESS shall store configuration information for a specified subsurface sensor. The configuration information includes:

a) a textual description of the location that the subsurface sensor is monitoring;
b) the type of subsurface the subsurface sensor is monitoring. Valid values are concrete, asphalt, open graded asphalt, gravel, clay, loam, sand, permafrost, various aggregates, air, other, and unknown; and
c) the depth of the subsurface sensor location, in centimeters below the pavement surface.

3.5.2.1.8 Configure Passive Ice Detection Logic

Upon request, the ESS shall store information regarding the pavement treatments being applied so that the ESS may more accurately estimate icing conditions using passive logic. The information includes:

a) the number of different pavement treatments stored by the ESS;

Do Not Copy Without Written Permission © 2022 AASHTO / ITE / NEMA

b) Each pavement treatment type stored by the ESS. Valid pavement treatment types include sand, dirt, gravel, cinders, water (as a diluting agent), enhanced salts, NaCL, CaCl, MgCl, cMA, kAC, NaFormate, NaA, and other;
c) the form of each pavement treatment type. Valid values are: dry, prewet, liquid and other; and
d) the percentage of each pavement treatment type and form by total application weight.

Different pavement treatments may be the same pavement treatment type but in different forms and in different percentages (by weight).

> Note: There are now combinations of pavement treatments that are used, and they may impact the calibration of the algorithms used.

3.5.2.1.9 Configure Snapshot Camera

Upon request, the ESS shall store a textual description of the location and direction to which the camera points and the filename to be used when storing new snapshots.

> Note: This requirement was modified in NTCIP 1204 v03 to more accurately reflect the design.

3.5.2.1.10 Manage Atmospheric Pressure Metadata

Requirements for managing atmospheric pressure sensor metadata follow.

3.5.2.1.10.1 Retrieve Atmospheric Pressure Metadata - Location

Upon request, the ESS shall return the number of atmospheric pressure sensors connected to the ESS and the following information for each atmospheric pressure sensor:

a) a textual description of the precipitation sensor location;
b) the relative height of the atmospheric pressure sensor from the reference height of the ESS (station) in meters; and
c) the location (latitude, longitude) of the atmospheric sensor, in microdegrees (10^{-6} degrees).

3.5.2.1.10.2 Retrieve Atmospheric Pressure Metadata - Sensor Information

Upon request, the ESS shall return the number of atmospheric pressure sensors connected to the ESS and the make, model and version number of each sensor so that the management station is able to properly interpret the accuracy, resolution and limits of the data.

3.5.2.1.10.3 Configure Atmospheric Pressure Metadata - Location

Upon request, the ESS shall store the following information for a specified atmospheric pressure sensor:

a) a textual description of the atmospheric pressure sensor location;
b) relative height of the atmospheric pressure sensor from the reference height of the ESS (station) in meters; and
c) the location (latitude, longitude) of the atmospheric sensor, in microdegrees (10^{-6} degrees).

3.5.2.1.11 Manage Wind Sensor Metadata

Requirements for managing wind sensor metadata follows.

3.5.2.1.11.1 Retrieve Metadata for Each Wind Sensor - Location

Upon request, the ESS shall return the number of wind sensors connected to the ESS and the location (latitude and longitude) of each wind sensor, in microdegrees (10^{-6} degrees).

© 2022 AASHTO / ITE / NEMA Do Not Copy Without Written Permission

3.5.2.1.11.2 Retrieve Metadata for Each Wind Sensor - Sensor Information

Upon request, the ESS shall return the number of wind sensors connected to the ESS and the make, model and version number of each wind sensor so that the management station is able to properly interpret the accuracy, resolution and limits of the data.

3.5.2.1.11.3 Configure Wind Sensor Metadata - Location

Upon request, the ESS shall store the following information for a specified wind sensor:

a) a textual description of the wind sensor location;
b) the relative height of the wind sensor to the reference height of the ESS (station) in meters; and
c) the location (latitude, longitude) of the wind sensor, in microdegrees (10^{-6} degrees).

3.5.2.1.12 Manage Temperature Sensor Metadata

Requirements for managing temperature sensor metadata follow.

3.5.2.1.12.1 Retrieve Temperature Sensor Metadata - Location

Upon request, the ESS shall return the number of air temperature sensors connected to the ESS and the following information for each air temperature sensor:

a) a textual description of the air temperature sensor location;
b) the relative height of the air temperature sensor to the reference height of the ESS (station) in meters; and
c) the location (latitude, longitude) of the air temperature sensor, in microdegrees (10^{-6} degrees).

3.5.2.1.12.2 Retrieve Temperature Sensor Metadata - Sensor Information

Upon request, the ESS shall return the number of air temperature sensors connected to the ESS and the make, model and version number of each temperature sensor so that the management station is able to properly interpret the accuracy, resolution and limits of the data.

3.5.2.1.12.3 Configure Temperature Sensor Metadata - Location

Upon request, the ESS shall store the following information for a specified air temperature sensor:

a) a textual description of the air temperature sensor location;
b) the relative height of the air temperature sensor to the reference height of the ESS (station) in meters; and
c) the location (latitude, longitude) of the air temperature sensor, in microdegrees (10^{-6} degrees).

3.5.2.1.13 Manage Humidity Sensor Metadata

Requirements for managing humidity sensor metadata follow.

3.5.2.1.13.1 Retrieve Humidity Sensor Metadata - Location

Upon request, the ESS shall return the number of humidity sensors connected to the ESS and the following information for each humidity sensor:

a) a textual description of the humidity sensor location;
b) the relative height of the humidity sensor to the reference height of the ESS (station) in meters; and
c) the location (latitude, longitude) of the humidity sensor, in microdegrees (10^{-6} degrees).

Do Not Copy Without Written Permission © 2022 AASHTO / ITE / NEMA

3.5.2.1.13.2 Retrieve Humidity Sensor Metadata - Sensor Information

Upon request, the ESS shall return the number of humidity sensors connected to the ESS and the make, model and version number of each humidity sensor so that the management station is able to properly interpret the accuracy, resolution and limits of the data.

3.5.2.1.13.3 Configure Humidity Sensor Metadata - Location

Upon request, the ESS shall store following information for a specified humidity sensor:

a) a textual description of the humidity sensor location;
b) the relative height of the humidity sensor to the reference height of the ESS (station) in meters; and
c) the location (latitude, longitude) of the humidity sensor, in microdegrees (10^{-6} degrees).

3.5.2.1.14 Manage Precipitation Sensor Metadata

Requirements for managing precipitation sensor metadata follow.

3.5.2.1.14.1 Retrieve Precipitation Sensor Metadata - Location

Upon request, the ESS shall return the number of precipitation sensors connected to the ESS and the following information for each precipitation sensor:

a) a textual description of the precipitation sensor location;
b) the relative height of the precipitation sensor to the reference height of the ESS (station) in meters; and
c) the location (latitude, longitude) of the precipitation sensor, in microdegrees (10^{-6} degrees).

3.5.2.1.14.2 Retrieve Precipitation Sensor Metadata - Sensor Information

Upon request, the ESS shall return the number of precipitation sensors connected to the ESS and the make, model and version number of each precipitation sensor so that the management station is able to properly interpret the accuracy, resolution and limits of the data.

3.5.2.1.14.3 Configure Precipitation Sensor Metadata - Location

Upon request, the ESS shall store the following information for a specified precipitation sensor:
a) relative height of the precipitation sensor to the reference height of the ESS (station) in meters; and
b) the location (latitude, longitude) of the precipitation sensor, in microdegrees (10^{-6} degrees).

3.5.2.1.14.4 Configure Precipitation Total User Specified Period

Upon request, the ESS shall store the collection period, in seconds, for measuring the total precipitation recorded for a specified precipitation sensor.

3.5.2.1.15 Manage Solar Radiation Sensor Metadata

Requirements for managing solar radiation sensor metadata follow.

3.5.2.1.15.1 Retrieve Solar Radiation Sensor Metadata - Location

Upon request, the ESS shall return the number of solar radiation sensors connected to the ESS and the following information for each solar radiation sensor:

© 2022 AASHTO / ITE / NEMA Do Not Copy Without Written Permission

a) a textual description of the solar radiation sensor location;
b) the relative height of the solar radiation sensor to the reference height of the ESS (station) in meters; and
c) the location (latitude, longitude) of the solar radiation sensor, in microdegrees (10^{-6} degrees).

3.5.2.1.15.2 Retrieve Solar Radiation Sensor Metadata - Sensor Information

Upon request, the ESS shall return the number of solar radiation sensors connected to the ESS and the make, model and version number of the specified solar radiation sensor so that the management station is able to properly interpret the accuracy, resolution and limits of the data.

3.5.2.1.15.3 Configure Solar Radiation Sensor Metadata - Location

Upon request, the ESS shall store the following information for a specified solar radiation sensor:

a) a textual description of the solar radiation sensor location;
b) the relative height of the solar radiation sensor to the reference height of the ESS (station) in meters; and
c) the location (latitude, longitude) of the solar radiation sensor, in microdegrees (10^{-6} degrees).

3.5.2.1.16 Manage Visibility Sensor Metadata

Requirements for managing visibility sensor metadata follow.

3.5.2.1.16.1 Retrieve Visibility Sensor Metadata - Location

Upon request, the ESS shall return the following information for a visibility sensor:

a) a textual description of the visibility sensor location;
b) the relative height of the visibility sensor to the reference height of the ESS (station) in meters; and
c) the location (latitude, longitude) of the visibility sensor, in microdegrees (10^{-6} degrees).

3.5.2.1.16.2 Retrieve Visibility Sensor Metadata - Sensor Information

Upon request, the ESS shall return the make, model and version number of a visibility sensor so that the management station is able to properly interpret the accuracy, resolution and limits of the data.

3.5.2.1.16.3 Configure Visibility Sensor Metadata - Location

Upon request, the ESS shall store the following information for a visibility sensor:

a) a textual description of the visibility sensor location;
b) the relative height of the visibility sensor to the reference height of the ESS (station) in meters; and
c) the location (latitude, longitude) of the visibility sensor, in microdegrees (10^{-6} degrees).

3.5.2.1.17 Manage Pavement Sensor Metadata

Requirements for managing pavement sensor metadata follow.

3.5.2.1.17.1 Retrieve Pavement Sensor Metadata - Location

Upon request, the ESS shall return the number of pavement sensors connected to the ESS and the following information for each pavement sensor:

a) a textual description of the pavement sensor location and the location of the pavement surface area the pavement sensor is monitoring;

 © 2022 AASHTO / ITE / NEMA

b) the relative height of the pavement sensor to the reference height of the ESS (station) in meters;
c) the location (latitude, longitude) of the pavement sensor, in microdegrees (10^{-6} degrees); and
d) the location (latitude, longitude) of the geometric center of the pavement surface area that the pavement sensor is monitoring, in microdegrees (10^{-6} degrees).

3.5.2.1.17.2 Retrieve Pavement Sensor Metadata - Sensor Information

Upon request, the ESS shall return the number of pavement sensors connected to the ESS and the make, model and version number of each pavement sensor so that the management station is able to properly interpret the accuracy of the data and precise meanings of code lists.

3.5.2.1.17.3 Configure Pavement Sensor - Location

Upon request, the ESS shall store the following information for a pavement sensor:

a) a textual description of the pavement sensor location and the location of the pavement surface area the pavement sensor is monitoring;
b) the location (latitude, longitude) of the pavement sensor, in microdegrees (10^{-6} degrees);
c) the location (latitude, longitude) of the geometric center of the pavement surface area that the pavement sensor is monitoring, in microdegrees (10^{-6} degrees); and
d) the relative height of the pavement surface to the reference height of the ESS (station) in meters.

3.5.2.1.18 Manage Subsurface Sensor Metadata

Requirements for managing subsurface sensor metadata follow.

3.5.2.1.18.1 Retrieve Subsurface Sensor Metadata - Location

Upon request, the ESS shall return the number of subsurface sensors connected to the ESS and the following information for each subsurface sensor:

a) a textual description of the subsurface sensor location; and
b) the location (latitude, longitude) of the geometric center of the subsurface sensor, in microdegrees (10^{-6} degrees).

3.5.2.1.18.2 Retrieve Subsurface Sensor Metadata - Sensor Information

Upon request, the ESS shall return the number of subsurface sensors connected to the ESS and the make, model and version number of each subsurface sensor so that the management station is able to properly interpret the accuracy of the data and precise meanings of code lists.

3.5.2.1.18.3 Configure Subsurface Sensor - Location

Upon request, the ESS shall store the following information for a specified subsurface sensor:

a) a textual description of the subsurface sensor location; and
b) the location (latitude, longitude) of the geometric center of the subsurface sensor, in microdegrees (10^{-6} degrees).

3.5.2.1.19 Manage Air Quality Sensor Metadata

Requirements for managing air quality sensor metadata follow.

© 2022 AASHTO / ITE / NEMA Do Not Copy Without Written Permission

3.5.2.1.19.1 Retrieve Air Quality Sensor Metadata - Location

Upon request, the ESS shall return the number of air quality sensors connected to the ESS and the following information for each air quality sensor:

a) a textual description of the air quality sensor location;
b) the relative height of the air quality sensor to the reference height of the ESS (station) in meters; and
c) the location (latitude, longitude) of the air quality sensor, in microdegrees (10^{-6} degrees).

3.5.2.1.19.2 Retrieve Air Quality Sensor Metadata - Sensor Information

Upon request, the ESS shall return the number of air quality sensors connected to the ESS and the make, model and version number of the air quality sensor so that the management station is able to properly interpret the accuracy, resolution and limits of the data.

3.5.2.1.19.3 Configure Air Quality Sensor Metadata - Location

Upon request, the ESS shall store the following information for a specified air quality sensor:

a) a textual description of the air quality sensor location;
b) the relative height of the air quality sensor to the reference height of the ESS (station) in meters; and
c) the location (latitude, longitude) of the air quality sensor, in microdegrees (10^{-6} degrees).

3.5.2.1.20 Manage Water Level Sensor Metadata

Requirements for managing water level sensor metadata follow.

3.5.2.1.20.1 Retrieve Water Level Metadata - Location

Upon request, the ESS shall return the number of water level sensors connected to the ESS and the following information for each water level sensor:

a) a textual description of the water level sensor location, including a description of the reference point that the water depth is measured against;
b) the relative height of the water level sensor to the reference height of the ESS (station) in meters; and
c) the location (latitude, longitude) of the water level sensor, in microdegrees (10^{-6} degrees).

3.5.2.1.20.2 Retrieve Water Level Metadata - Sensor Information

Upon request, the ESS shall return the number of water level sensors connected to the ESS and the make, model, and version number of each water level sensor so that the management station is able to properly interpret the accuracy, resolution and limits of the data.

3.5.2.1.20.3 Retrieve Water Level Metadata - Warning Level

Upon request, the ESS shall return the number of water level sensors connected to the ESS and the water level depth, measured in centimeters from a user defined point, for each water level sensor that the water level is of concern. This water level depth may be the depth when the water levels may overflow onto the roadway pavement, or may damage electronic roadside equipment in a cabinet.

3.5.2.1.20.4 Configure Water Level Metadata - Location

Upon request, the ESS shall store the following information for a specified water level sensor:

a) a textual description of the water level sensor location, including a description of the reference point that the water depth is measured against;

Do Not Copy Without Written Permission © 2022 AASHTO / ITE / NEMA

b) the relative height of the water level sensor to the reference height of the ESS (station) in meters; and
c) the location (latitude, longitude) of the water level sensor, in microdegrees (10^{-6} degrees).

3.5.2.1.20.5 Configure Water Level Metadata - Warning Level

Upon request, the ESS shall store the water level depth of the specified water level sensor, measured in centimeters from a user defined point, that the water level is of concern.

3.5.2.1.21 Manage Pavement Treatment System Metadata

Requirements for managing pavement treatment system metadata follow.

3.5.2.1.21.1 Retrieve Pavement Treatment System Metadata - Location

Upon request, the ESS shall return the number of water level sensors connected to the ESS and the following information for each water level sensor:

a) a textual description of the pavement treatment system location; and
b) the location (latitude, longitude) of the pavement treatment system location, in microdegrees (10^{-6} degrees).

3.5.2.1.21.2 Retrieve Pavement Treatment Metadata - System Information

Upon request, the ESS shall return the make, model, and version number of the pavement treatment system so that the management station is able to properly interpret the capabilities of the pavement treatment system.

3.5.2.1.21.3 Configure Pavement Treatment System Metadata - Location

Upon request, the ESS shall store the following information for a pavement treatment system:

a) a textual description of the pavement treatment system location; and
b) the location (latitude, longitude) of the pavement treatment system, in microdegrees (10^{-6} degrees).

3.5.2.2 Sensor Status Monitoring Requirements

There are no status monitoring requirements for the Sensor Manager.

3.5.2.3 Sensor Data Retrieval Requirements

Requirements for retrieving data from a Sensor Manager follow.

3.5.2.3.1 Retrieve Weather Profile with Mobile Sources [Version 03 Only - Deprecated in v04]

Upon request, the ESS shall return a list of records recorded by the ESS over a period of time, with each record containing the following information about the mobile station:

a) location
b) speed
c) bearing
d) odometer reading
e) roadway friction
f) local weather observation
g) time of reading

© 2022 AASHTO / ITE / NEMA Do Not Copy Without Written Permission

Note: This requirement was used in NTCIP 1204 v03, but has been replaced in NTCIP 1204 v04. This replacement was made to support multiple observation values from multiple atmospheric pressure sensors, humidity sensors and precipitation sensors, and changes in observation values for the pavement surface condition. The replacement can be found in Section 3.5.2.3.10. See Annex D for further information regarding this change from v03 to v04 of NTCIP 1204.

3.5.2.3.2 Monitor Weather Condition

Requirements for monitoring weather conditions follow.

3.5.2.3.2.1 Retrieve Atmospheric Pressure [Versions 01 to 03 Only - Deprecated in v04]

Upon request, the ESS shall return the current atmospheric pressure.

Note: This requirement was used in NTCIP 1204 v01 to v03, but has been replaced in NTCIP 1204 v04. NTCIP 1204 v04 adds support for returning multiple atmospheric pressure values from an ESS with multiple atmospheric pressure sensors. The replacement can be found in Section 3.5.2.3.2.10. See Annex D for further information regarding this change from v03 to v04 of NTCIP 1204.

3.5.2.3.2.2 Retrieve Wind Data

Upon request, the ESS shall return the following information for each wind sensor reporting to the ESS:

a) the average wind speed recorded during the 2 minutes preceding the observation in tenths of meters per second;
b) the average direction the wind is blowing from, as recorded during the 2 minutes preceding the observation, measured clockwise in degrees from true north;
c) the current wind speed in tenths of meters per second;
d) the current direction the wind is blowing from, measured clockwise in degrees from true north;
e) the maximum wind gust recorded during the 10 minutes preceding the observation in tenths of meters per second;
f) the direction of the maximum wind gust recorded during the 10 minutes preceding the observation, measured in degrees clockwise from true north; and
g) the assessment of the wind situation from a staffed station as defined by the Beaufort Wind Scale in the Glossary of Meteorology. Valid values are: other, unknown, calm, light breeze, moderate breeze, strong breeze, gale, moderate gale, strong gale, storm winds, hurricane force winds, and gusty winds.

3.5.2.3.2.3 Retrieve Air Temperature

Upon request, the ESS shall return the current ambient air temperature in tenths of degrees Celsius for each air temperature sensor reporting to the ESS.

3.5.2.3.2.4 Retrieve Daily Minimum and Maximum Temperature

Upon request, the ESS shall return the minimum and maximum ambient air temperatures that have been recorded within the previous 24 hours in tenths of degrees Celsius.

3.5.2.3.2.5 Retrieve Humidity [Versions 01 to 03 Only - Deprecated in v04]

Upon request, the ESS shall return the current humidity, dew point, and wet bulb temperature.

Note: This requirement was used in NTCIP 1204 v01 to v03, but has been replaced in NTCIP 1204 v04. This replacement was made because users required support for returning multiple relative humidity, dew point temperature, and wet bulb temperature values from an ESS with multiple humidity sensors. The replacement can be found in Section 3.5.2.3.2.11. See Annex D for further information regarding this change from v03 to v04 of NTCIP 1204.

Do Not Copy Without Written Permission © 2022 AASHTO / ITE / NEMA

3.5.2.3.2.6 Monitor Precipitation

Requirements for monitoring precipitation follow.

3.5.2.3.2.6.1 Retrieve Precipitation Presence [Versions 01 to 03 Only - Deprecated in v04]

Upon request, the ESS shall return an indication of whether precipitation is currently detected and an indication of the make and model of the sensor so that the management station is able to be aware of the likely accuracy of the reading.

> Note: This requirement was used in NTCIP 1204 v01 to v03, but has been replaced in NTCIP 1204 v04. This replacement was made because users required support for returning multiple precipitation values from an ESS with multiple precipitation sensors. The replacement can be found in Section 3.5.2.3.2.6.4. See Annex D for further information regarding this change from v03 to v04 of NTCIP 1204.

3.5.2.3.2.6.2 Retrieve Precipitation Rates [Versions 01 to 03 Only - Deprecated in v04]

Upon request, the ESS shall return the rate at which precipitation is currently falling and the start and stop time of the latest recorded precipitation.

> Note: This requirement was used in NTCIP 1204 v01 to v03, but has been replaced in NTCIP 1204 v04. This replacement was made because users required support for returning multiple precipitation values from an ESS with multiple precipitation sensors. The replacement can be found in Section 3.5.2.3.2.6.5. See Annex D for further information regarding this change from v03 to v04 of NTCIP 1204.

3.5.2.3.2.6.3 Retrieve Precipitation Totals [Versions 01 to 03 Only - Deprecated in v04]

Upon request, the ESS shall return the total amounts of precipitation recorded over the last one hour, three hours, six hours, twelve hours, and 24 hours.

> Note: This requirement was used in NTCIP 1204 v01 to v03, but has been replaced in NTCIP 1204 v04. This replacement was made because users required support for returning multiple precipitation values from an ESS with multiple precipitation sensors. The replacement can be found in Section 3.5.2.3.2.6.6. See Annex D for further information regarding this change from v03 to v04 of NTCIP 1204.

3.5.2.3.2.6.4 Retrieve Precipitation Presence

Upon request, the ESS shall return an indication of whether precipitation is currently detected for each precipitation sensor reporting to the ESS. Valid values are precipitation detected, precipitation not detected, and error. Precipitation is detected if 0.01 inches of liquid water equivalent is detected.

> Note: The previously available requirement to retrieve precipitation presence has been deprecated in NTCIP 1204 v04. This replacement was made because users required support for returning multiple precipitation values from an ESS with multiple precipitation sensors. The previously available requirement can be found in Section 3.5.2.3.2.6.1. See Annex D for further information regarding this change from v03 to v04 of NTCIP 1204.

3.5.2.3.2.6.5 Retrieve Precipitation Rates

Upon request, the ESS shall return the rate of precipitation for each precipitation sensor reporting to the ESS as follows:

© 2022 AASHTO / ITE / NEMA Do Not Copy Without Written Permission

a) The rate the rain is currently falling, or the water equivalent of snow, in tenths of grams per square meter;
b) the rate that snow is accumulating in 10^-7 meters per second; and
c) the start and stop times of the latest recorded precipitation event measured in seconds since 00:00:00 January 1,1970 UTC. The precipitation event can be rainfall or snowfall.

Note: The previously available requirement to retrieve precipitation rates has been deprecated in NTCIP 1204 v04. This replacement was made because users required support for returning multiple precipitation values from an ESS with multiple precipitation sensors. The previously available requirement can be found in Section 3.5.2.3.2.6.2. See Annex D for further information regarding this change from v03 to v04 of NTCIP 1204.

3.5.2.3.2.6.6 Retrieve Precipitation Totals

Upon request, the ESS shall return the total amount of precipitation recorded over the last one hour, three hour, six hour, twelve hour, and twenty-four hour rolling periods, in tenths of kilograms per square meter, for each precipitation sensor reporting to the ESS.

Note: The previously available requirement to retrieve precipitation totals has been deprecated in NTCIP 1204 v 04. This replacement was made because users required support for returning multiple precipitation values from an ESS with multiple precipitation sensors. The previously available requirement can be found in Section 3.5.2.3.2.6.3. See Annex D for further information regarding this change from v03 to v04 of NTCIP 1204.

3.5.2.3.2.6.7 Retrieve Precipitation Totals - User Specified

Upon request, the ESS shall return the total amount of precipitation recorded over a user specified, rolling time period, in tenths of kilograms per square meter, for a selected precipitation sensor reporting to the ESS.

3.5.2.3.2.6.8 Retrieve Precipitation Type

Upon request, the ESS shall return the assessment of the type and intensity of the current precipitation situation. Valid values are other, unknown, no precipitation, slight unidentified (precipitation), moderate unidentified, heavy unidentified, slight snow, moderate snow, heavy snow, slight rain, moderate rain, heavy rain, slight frozen precipitation, moderate frozen precipitation, and heavy frozen precipitation. The precipitation intensity is defined as follows: slight < 2 mm/hour water equivalent, moderate is ≥ 2 and < 8 mm/hour equivalent, and heavy is ≥ 8 mm/hour water equivalent.

3.5.2.3.2.7 Retrieve Solar Radiation [Versions 01 to 03 Only - Deprecated in v04]

Upon request, the ESS shall return the solar radiation data. The types of measured solar radiation data that the ESS shall provide are:

a) total minutes of sun over a 24 hour period
b) instantaneous infrared
c) instantaneous ultraviolet
d) visible
e) near-infrared

Note: The previously available requirement to retrieve solar radiation readings has been deprecated in NTCIP 1204 v 04. This replacement was made because users required support for returning multiple solar radiation readings from an ESS with multiple solar radiation sensors. The previously available requirement can be found in Section 3.5.2.3.2.12. See Annex D for further information regarding this change from v03 to v04 of NTCIP 1204.

Do Not Copy Without Written Permission © 2022 AASHTO / ITE / NEMA

3.5.2.3.2.8 Retrieve Visibility

Upon request, the ESS shall return the current visibility distance in decimeters (tenths of a meter).

3.5.2.3.2.9 Retrieve Compressed Weather Data [Version 03 - Deprecated in v04]

Note: This requirement was used in NTCIP 1204 v03, but has been deprecated in NTCIP 1204 v04. See Annex D for further information regarding this change from NTCIP 1204 v03 to NTCIP 1204 v04.

3.5.2.3.2.10 Retrieve Atmospheric Pressure

Upon request, the ESS shall return the current atmospheric pressure in 1/10ths of millibars (a.k.a. tenths of hectoPascals) for each atmospheric sensor reporting to the ESS.

Note: The previously available requirement to retrieve atmospheric pressure has been deprecated in NTCIP 1204 v04. This replacement was made because users required support for returning multiple atmospheric pressure values from an ESS with multiple atmospheric pressure sensors. The previously available requirement can be found in Section 3.5.2.3.2.1. See Annex D for further information regarding this change from NTCIP 1204 v03 to NTCIP 1204 v044.

3.5.2.3.2.11 Retrieve Relative Humidity

Upon request, the ESS shall return the following information for each humidity sensor reporting to the ESS:

a) the current humidity in percent;
b) the derived ambient dewpoint temperature in tenths of degrees Celsius; and
c) the derived ambient wet-bulb temperature in tenths of degrees Celsius.

Note: The previously available requirement to retrieve humidity has been deprecated in NTCIP 1204 v04. This replacement was made because users required support for returning multiple relative humidity, dew point temperature, and wet bulb temperature values from an ESS with multiple humidity sensors. The previously available requirement can be found in Section 3.5.2.3.2.5. See Annex D for further information regarding this change from v03 to v04 of NTCIP 1204.

3.5.2.3.2.12 Retrieve Solar Radiation

Upon request, the ESS shall return the solar radiation data for each solar radiation sensor reporting to the ESS. The types of measured solar radiation data that the ESS shall provide are:

a) the total minutes of sunshine measured over the preceding 24-hour period, as defined by WMO Code Form FM 94 BUFR Table B item 0 14 031;
b) the instantaneous infrared radiation measured, in watts per square meter, as defined by WMO Code Form FM 94 BUFR Table B item 0 14 017;
c) the instantaneous ultraviolet, visible and near-infrared radiation measured, in watts per square meter, as defined by WMO Code Form FM 94 BUFR Table B item 0 14 018; and
d) the average total radiation measured, in watts per square meter, as defined by WMO Code Form FM 94 BUFR Table B item 0 14 025, over a user defined rolling period, measured in seconds.

Note: The previously available requirement to retrieve solar radiation has been deprecated in NTCIP 1204 v04. This replacement was made because users required support for returning multiple solar radiation readings from an ESS with multiple solar radiation sensors. The previously available requirement can be found in Section 3.5.2.3.2.7. See Annex D for further information regarding this change from v03 to v04 of NTCIP 1204.

© 2022 AASHTO / ITE / NEMA Do Not Copy Without Written Permission

3.5.2.3.3 Monitor Pavement Condition

Requirements for monitoring pavement conditions follow.

3.5.2.3.3.1 Retrieve Pavement Surface Condition [Versions 01 to 03 - Deprecated in v04]

Note: This requirement was used in NTCIP 1204 v01 to v03, but has been replaced in NTCIP 1204 v04. This replacement was made to separate pavement surface conditions that are currently observed and pavement surface conditions that are forecasted. The replacement can be found in Section 3.5.2.3.3.8, while the make and model of the sensor can be found in Section 3.5.2.1.17.2. See Annex D for further information regarding this change from v03 to v04 of NTCIP 1204.

3.5.2.3.3.2 Retrieve Conditions for Freezing Algorithms - Active

There are two methods to determine ice and moisture conditions on the pavement surface – active and passive. Active pavement sensors determine the freeze point on the pavement surface by actively freezing a portion of the roadway surface. For an active pavement sensor, upon request, the ESS shall return:

a) the pavement surface temperature, in tenths of degrees Celsius;
b) the pavement temperature, in tenths of degrees Celsius;
c) the depth below the pavement surface that the pavement temperature is measured, in centimeters;
d) the freeze point on the pavement surface at which the existing solution on the roadway freezes, in tenths of degrees Celsius;
e) if black ice detected on the pavement surface. Valid values are no ice, black ice, detector error and other;
f) the depth of any water/solution film or ice on the pavement surface, in tenths of a millimeter; and
g) an indication of whether any of this data might be in error. Valid values for the data error are none (no error), no response, cut cable, short circuit, dirty lens, and other.

3.5.2.3.3.3 Retrieve Conditions for Freezing Algorithms - Passive

There are two methods to determine ice and moisture conditions on the pavement surface - active and passive. Passive pavement sensors use the freeze point on the pavement surface using algorithms without freezing the chemical mixture on the roadway surface. For a passive pavement sensor, upon request, the ESS shall return the following:

a) the pavement surface temperature, in tenths of degrees Celsius;
b) the pavement temperature, in tenths of degrees Celsius;
c) the depth below the pavement surface that the pavement temperature is measured, in centimeters;
d) the freeze point on the pavement surface at which the existing solution on the roadway freezes, in tenths of degrees Celsius;
e) if black ice detected on the pavement surface. Valid values are no ice, black ice, detector error and other;
f) the depth of any water/solution film or ice on the pavement surface, in tenths of a millimeter;
g) the salinity of the water/solution film on the pavement surface, in parts per one hundred thousand, by weight;
h) the conductivity of the water/solution film on the pavement surface, as detected by the pavement surface sensor, in tenths of milliohms/cm;
i) an indication of whether any of this data might be in error. Valid values for the data error are none (no error), no response, cut cable, short circuit, dirty lens, and other;
j) the pavement treatment type used for algorithm. Valid pavement treatment types include sand, dirt, gravel, cinders, water (as a diluting agent) , enhanced salts, NaCL, CaCl, MgCl, cMA, kAC, NaFormate, NaA, and other;
k) the form of each pavement treatment type. Valid values are dry, prewet, liquid and other; and
l) the percentage of the total application weight that is of the pavement treatment type.

 © 2022 AASHTO / ITE / NEMA

3.5.2.3.3.4 Retrieve Adjacent Snow Depth [Versions 01 to 03 - Deprecated in v04]

Upon request, the ESS shall return the current depth of snow adjacent to the traveled way (e.g., roadway, rail line, etc.), in centimeters. The depth shall be representative of the snow depth in the area, exclusive of plowed areas and snow drifts.

Note: This requirement was used in NTCIP 1204 v01 to v03, but has been replaced in NTCIP 1204 v04. This replacement was made because users required support for returning multiple snow depth values from an ESS with multiple sensors. The replacement can be found in Section 3.5.2.3.3.11. See Annex D for further information regarding this change from v03 to v04 of NTCIP 1204.

3.5.2.3.3.5 Retrieve Roadway Snow Depth [Versions 01 to 03 - Deprecated in v04]

Upon request, the ESS shall return the current depth of packed and unpacked snow on the roadway pavement (i.e., roadway, rail line, etc.), in centimeters.

Note: This requirement was used in NTCIP 1204 v01 to v03, but has been replaced in NTCIP 1204 v04. This replacement was made because users required support for returning multiple roadway snow depth values from an ESS with multiple sensors. The replacement can be found in Section 3.5.2.3.3.12. See Annex D for further information regarding this change from v03 to v04 of NTCIP 1204.

3.5.2.3.3.6 Retrieve Roadway Ice Thickness [Versions 01 to 03 - Deprecated in v04]

Upon request, the ESS shall return the current thickness of ice on the roadway pavement in millimeters.

Note: This requirement was used in NTCIP 1204 v01 to v03, but has been replaced in NTCIP 1204 v04. This replacement was made because users required support for returning multiple snow depth values from an ESS with multiple sensors. The replacement can be found in Section 3.5.2.3.3.13. See Annex D for further information regarding this change from v03 to v04 of NTCIP 1204.

3.5.2.3.3.7 Retrieve Compressed Pavement Condition Data [Version 03 - Deprecated in v04]

Note: This requirement was used in NTCIP 1204 v03, but has been deprecated in NTCIP 1204 v04. See Annex D for further information regarding this change from v03 to v04 of NTCIP 1204.

3.5.2.3.3.8 Retrieve Pavement Surface Condition

Upon request, the ESS shall return the following information for each pavement sensor reporting to the ESS:

a) the current pavement surface temperature, in tenths of degrees Celsius;
b) the validity of the data reported. Valid values for the data error are none (no error), no response, cut cable, short circuit, dirty lens, and other; and
c) any presence of moisture and the type of moisture on the surface. Valid values for moisture type are dry, moist, chemically moist, wet, chemically wet, standing water, frost, slush, snow, ice, other, no report, and error.

The definitions of valid values follow:

a) **dry:** no moisture over the sensor (EN 15518-3)
b) **moist:** from 0.01 mm to 0.2 mm water film thickness over the sensor (EN 15518-3)
c) **chemically moist:** from 0.01 mm to 0.2 mm water film thickness over the sensor mixed with de-icing or anti-icing chemical
d) **wet:** from 0.2 mm water film thickness to 2.0 mm water film thickness over the sensor (EN 15518-3)

© 2022 AASHTO / ITE / NEMA Do Not Copy Without Written Permission

e) **chemically wet:** from 0.2 mm water film thickness or greater mixed with de-icing or anti-icing chemical
f) **standing water:** from 2.0 mm or greater water film thickness over the sensor (EN 15518-3)
g) **frost:** formation of frost (ice crystals) is detected over the sensor
h) **slush:** snow or ice that has been reduced to a soft water mixture by rain, warm temperature, and/or chemical treatment (Glossary of Meteorology)
i) **snow:** snow is detected over the sensor
j) **ice:** ice or black ice is detected
k) **other:** The value reported by the sensor is not defined by the standard. See the manufacturer's documentation for more information
l) **noReport:** The sensor is not providing any reading for surface status and may not be responding
m) **error:** The sensor is providing a reading for surface status, but either the reading indicates an error code or the data has been deemed invalid or suspect

Note: The previously available requirement to retrieve pavement surface conditions has been deprecated in NTCIP 1204 v04. This replacement was made to separate pavement surface conditions that are observed and pavement surface conditions that are forecasted. The previously available requirement can be found in Section 3.5.2.3.3.1. See Annex D for further information regarding this change from v03 to v04 of NTCIP 1204.

3.5.2.3.3.9 Retrieve Forecasted Pavement Surface Condition

Upon request, the ESS shall return the forecasted pavement surface condition for each pavement sensor reporting to the ESS. The forecast is derived based on the current pavement surface condition and other weather observations. Valid values are: no advisory, ice advisory, slush advisory, freeze advisory, freeze hazard, other, no report and error.

The definitions of valid values follow:

a) **noAdvisory:** No frozen moisture is detected and the risk of frozen moisture is low.
b) **iceAdvisory:** The risk of the formation of ice or black ice on the roadway is elevated, but its occurrence, location, and/or timing is still uncertain
c) **slushAdvisory:** The risk of the accumulation of snow or slush on the roadway is elevated, but its occurrence, location, and/or timing is still uncertain
d) **freezeAdvisory:** The risk of the formation of some sort of frozen moisture on the roadway is elevated, but its occurrence, location, and/or timing is still uncertain
e) **freezeHazard:** The sensor detects some sort of frozen moisture but is unable to classify as slush or ice
f) **other:** The value reported by the sensor is not defined by the standard. See the manufacturer's documentation for more information.
g) **noReport:** The sensor is not providing any reading for surface status and may not be responding
h) **error:** The sensor is providing a reading for surface status, but either the reading indicates an error code or the data has been deemed invalid or suspect

3.5.2.3.3.10 Retrieve Roadway Friction Coefficient

Upon request, the ESS shall return the friction coefficient of the roadway pavement. The calculation of coefficient of friction is complex and is dependent on many variables, such as the tire on a vehicle itself, and thus it is difficult to measure for each vehicle. However, the reported friction coefficient shall be based on an empirical model that has a strong correlation with actual measured friction coefficients using a standard test method and test apparatus, such as a decelerometer or a surface friction tester.

Do Not Copy Without Written Permission © 2022 AASHTO / ITE / NEMA

3.5.2.3.3.11 Retrieve Adjacent Snow Depth

Upon request, the ESS shall return the current depth of snow adjacent to the traveled way (e.g., shoulders), in centimeters, for each sensor. The depth shall be representative of the snow depth in the area, exclusive of plowed areas and snow drifts.

Note: The previously available requirement to retrieve the adjacent snow depth has been deprecated in NTCIP 1204 v04. This replacement was made because users required support for returning the adjacent snow depths for an ESS from multiple sensors. The previously available requirement can be found in Section 3.5.2.3.3.4. See Annex D for further information regarding this change from v03 to v04 of NTCIP 1204.

3.5.2.3.3.12 Retrieve Roadway Snow Depth

Upon request, the ESS shall return the current depth of packed and unpacked snow on the roadway pavement (i.e., roadway, rail line, etc.), in centimeters, for each sensor.

Note: The previously available requirement to retrieve the roadway snow depth has been deprecated in NTCIP 1204 v04. This replacement was made because users required support for returning the roadway snow depths for an ESS from multiple sensors. The previously available requirement can be found in Section 3.5.2.3.3.5. See Annex D for further information regarding this change from v03 to v04 of NTCIP 1204.

3.5.2.3.3.13 Retrieve Roadway Ice Thickness

Upon request, the ESS shall return the current thickness of ice on the roadway pavement in millimeters for each pavement sensor.

Note: The previously available requirement to retrieve the thickness of ice on the roadway pavement has been deprecated in NTCIP 1204 v04. This replacement was made because users required support for returning the roadway ice thickness for an ESS from multiple sensors. The previously available requirement can be found in Section 3.5.2.3.3.6. See Annex D for further information regarding this change from v03 to v04 of NTCIP 1204.

3.5.2.3.4 Monitor Subsurface Conditions

Requirements for monitoring subsurface conditions follow.

3.5.2.3.4.1 Retrieve Subsurface Temperature

Upon request, the ESS shall return the current subsurface temperature in tenths of degrees Celsius. The ESS shall also return an indication of whether any of this data might be in error. Valid values for the data error are none (no error), no response, cut cable, short circuit, and other.

3.5.2.3.4.2 Retrieve Subsurface Moisture

Upon request, the ESS shall return the amount of moisture, in percent, currently present in the subsurface. A value of 0% indicates that the subsurface is dry, while a value of 100% indicates the subsurface is saturated.

3.5.2.3.4.3 Retrieve Compressed Subsurface Condition Data [Version 03 - Deprecated in v04]

Note: This requirement was used in NTCIP 1204 v03, but has been deprecated in NTCIP 1204 v04. See Annex D for further information regarding this change from v03 to v04 of NTCIP 1204.

© 2022 AASHTO / ITE / NEMA Do Not Copy Without Written Permission

3.5.2.3.5 Monitor Situation Assessments

Requirements for monitoring situation assessments follow.

3.5.2.3.5.1 Retrieve Wind Situation

Upon request, the ESS shall return the assessment of the wind situation from a staffed station as defined by the Beaufort Wind Scale in the Glossary of Meteorology. Valid values are: other, unknown, calm, light breeze, moderate breeze, strong breeze, gale, moderate gale, strong gale, storm winds, hurricane force winds, and gusty winds.

3.5.2.3.5.2 Retrieve Precipitation Situation

Upon request, the ESS shall return the assessment of the type and intensity of the current precipitation situation. The assessment may be made through automated processes, or if it is a staffed station, manually. Valid values are other, unknown, no precipitation, slight unidentified (precipitation), moderate unidentified, heavy unidentified, slight snow, moderate snow, heavy snow, slight, moderate rain, heavy rate, slight frozen precipitation, moderate frozen precipitation, and heavy frozen precipitation. The precipitation intensity is defined as follows: slight < 2 mm/hour water equivalent, moderate is ≥ 2 and < 8 mm/hour equivalent, and heavy is ≥ 8 mm/hour water equivalent.

3.5.2.3.5.3 Retrieve Cloud Situation [Versions 01 to 03 Only - Deprecated in v04]

Note: This requirement was used in NTCIP 1204 v01 to v03, but has been replaced in NTCIP 1204 v04. This replacement was made because the values used in the retired requirement were too subjective while the replacement requirement used values as defined by the World Meteorological Organization. The replacement can be found in Section 3.5.2.3.5.7. See Annex D for further information regarding this change from v03 to v04 of NTCIP 1204.

3.5.2.3.5.4 Retrieve Visibility Situation

Upon request, the ESS shall return the assessment of the visibility situation. The assessment may be made through automated processes, or if it is a staffed station, manually. Valid values are other, unknown, clear, fog not patchy, patchy fog, blowing snow, smoke, sea spray, vehicle spray, blowing dust or sand, sun glare, and swarms of insects.

3.5.2.3.5.5 Retrieve Ground State [Versions 01 to 03 Only - Deprecated in v04]

Upon request, the ESS shall return the assessment of the ground state next to the roadway (the roadside, and not the roadway pavement or shoulders). The assessment is made from a staffed station. Valid values are other, dry, moist, wet, flooded, frozen, glaze, dusty sandy, very dry, icy, patchy wet snow, moderate wet snow cover, full wet snow cover, patchy dry snow, moderate dry snow cover, full dry snow cover, drifting snow, and unknown.

Note: This requirement was used in NTCIP 1204 v01 to v03, but has been replaced in NTCIP 1204 v04. This replacement was made because the values used in the retired requirement were expanded. The replacement can be found in Section 3.5.2.3.5.8. See Annex D for further information regarding this change from NTCIP 1204 v03 to NTCIP 1204 v04.

Do Not Copy Without Written Permission © 2022 AASHTO / ITE / NEMA

3.5.2.3.5.6 Retrieve Pavement State [Versions 01 to 03 Only - Deprecated in v04]

Upon request, the ESS shall return the assessment of the pavement surface. The assessment is made from a staffed station. Valid values are other, dry, wet, puddles, shallow standing water, shallow flowing water, deep standing water, deep flowing water, dusting fresh snow, moderate fresh snow, deep fresh snow, plowed snow, slush, packed snow patches, packed snow, light snow drift, moderate snow drifts, heavy snow drifts, frost, ice patches, moderately icy, heavy icing, black ice, sheet ice, and frozen slush.

Note: This requirement was used in NTCIP 1204 v01 to v03, but has been replaced in NTCIP 1204 v04. This replacement was made because the values used in the retired requirement were expanded. The replacement can be found in Section 3.5.2.3.5.9. See Annex D for further information regarding this change from NTCIP 1204 v03 to NTCIP 1204 v04.

3.5.2.3.5.7 Retrieve Cloud Situation

Upon request, the ESS shall return the amount of cloud cover in the sky, measured in oktas, as defined in WMO code table 2700. The assessment may be made through automated processes, or if it is a staffed station, manually.

Note: The previously available requirement to retrieve the cloud situation has been deprecated in NTCIP 1204 v04. This replacement was made because the previous values supported were subjective while the new values are based on a World Meteorological Organization definition. The previously available requirement can be found in Section 3.5.2.3.5.3. See Annex D for further information regarding this change from NTCIP 1204 v03 to NTCIP 1204 v04.

3.5.2.3.5.8 Retrieve Ground State

Upon request, the ESS shall return the assessment of the ground state next to the roadway (the roadside, and not the roadway pavement or shoulders). The assessment is made from a staffed station. Valid values are other, dry, moist, wet, flooded, frozen, glaze, dusty sandy, very dry, icy, patchy wet snow, moderate wet snow cover, full wet snow cover, patchy dry snow, moderate dry snow cover, full dry snow cover, drifting snow, puddles, standing water, flowing water, fresh snow, plowed snow, slush, and unknown.

Note: The previously available requirement to retrieve the pavement state has been deprecated in NTCIP 1204 v04. This replacement was made because the values used in the retired requirement were expanded. The previously available requirement can be found in Section 3.5.2.3.5.5. See Annex D for further information regarding this change from NTCIP 1204 v03 to NTCIP 1204 v04.

3.5.2.3.5.9 Retrieve Pavement State

Upon request, the ESS shall return the assessment of the pavement surface. The assessment is made from a staffed station. Valid values are other, dry, wet, puddles, shallow standing water, shallow flowing water, deep standing water, deep flowing water, dusting fresh snow, moderate fresh snow, deep fresh snow, plowed snow, slush, packed snow patches, packed snow, light snow drift, moderate snow drifts, heavy snow drifts, frost, ice patches, moderately icy, heavy icing, black ice, sheet ice, frozen slush, absorption, absorption at dewpoint, bare and dry, bare and wet, blowing snow, chemically wet, dew, damp, and wet slush.

Note: The previously available requirement to retrieve the pavement state has been deprecated in NTCIP 1204 v04. This replacement was made because the values used in the retired requirement were expanded. The previously available requirement can be found in Section 3.5.2.3.5.6. See Annex D for further information regarding this change from NTCIP 1204 v03 to NTCIP 1204 v04.

© 2022 AASHTO / ITE / NEMA Do Not Copy Without Written Permission

3.5.2.3.6 Monitor Air Quality and Biohazard Conditions

Requirements for monitoring air quality and biohazard conditions follow.

3.5.2.3.6.1 Retrieve Carbon Monoxide Reading

Upon request, the ESS shall return the current concentration of carbon monoxide in the air, in parts per million for each air quality sensor reporting to the ESS.

3.5.2.3.6.2 Retrieve Carbon Dioxide Reading [Versions 01 to 03 - Deprecated in v04]

Upon request, the ESS shall return the current concentration of carbon dioxide in the air, in parts per billion for each air quality sensor reporting to the ESS.

> Note: This requirement was used in NTCIP 1204 v01 to v03, but has been replaced in NTCIP 1204 v04. This replacement was made because the previous range of allowable values was insufficient. The replacement can be found in Section 3.5.2.3.6.10. See Annex D for further information regarding this change from NTCIP 1204 v03 to NTCIP 1204 v04.

3.5.2.3.6.3 Retrieve Nitrous Oxide Reading [Versions 01 to 03 - Deprecated in v04]

Upon request, the ESS shall return the current concentration of nitric oxide (incorrectly called nitrous oxide) in the air, in parts per million for each air quality sensor reporting to the ESS.

> Note: This requirement was used in NTCIP 1204 v01 to v03, but has been replaced in NTCIP 1204 v04.. This replacement was made because the previous range of allowable values did not have enough precision, and the gas was incorrectly named. The replacement can be found in Section 3.5.2.3.6.11. See Annex D for further information regarding this change from NTCIP 1204 v03 to NTCIP 1204 v04.

3.5.2.3.6.4 Retrieve Nitrogen Dioxide Reading

Upon request, the ESS shall return the current concentration of nitrogen dioxide in the air, in parts per billion for each air quality sensor reporting to the ESS.

3.5.2.3.6.5 Retrieve Sulfur Dioxide Reading

Upon request, the ESS shall return the current concentration of sulfur dioxide in the air, in parts per billion for each air quality sensor reporting to the ESS.

3.5.2.3.6.6 Retrieve Ozone Reading [Versions 01 to 03 - Deprecated in v04]

Upon request, the ESS shall return the current concentration of ozone in the air, in parts per one hundred billion for each air quality sensor reporting to the ESS.

> Note: This requirement was used in NTCIP 1204 v01 to v03, but has been replaced in NTCIP 1204 v04. This replacement was made because the previous range of allowable values was insufficient. The replacement can be found in Section 3.5.2.3.6.12. See Annex D for further information regarding this change from NTCIP 1204 v03 to NTCIP 1204 v04.

3.5.2.3.6.7 Retrieve Small Particulate Matter Reading

Upon request, the ESS shall return the current concentration in the air of small particulate matter of 10 micrometers or less in diameter. The concentration is measured in micrograms per cubic meter for each air quality sensor reporting to the ESS.

Do Not Copy Without Written Permission © 2022 AASHTO / ITE / NEMA

3.5.2.3.6.8 Retrieve Compressed Air Quality Data [Version 03 - Deprecated in v04]

Note: This requirement was used in NTCIP 1204 v03, but has been deprecated in NTCIP 1204 v04. See Annex D for further information regarding this change from v03 to v04 of NTCIP 1204.

3.5.2.3.6.9 Retrieve Particulate Matter (2.5) Reading

Upon request, the ESS shall return the current concentration in the air of small particulate matter of 2.5 micrometers or less in diameter for each air quality sensor reporting to the ESS. The concentration is measured in micrograms per cubic meter.

3.5.2.3.6.10 Retrieve Carbon Dioxide Reading

Upon request, the ESS shall return the current concentration of carbon dioxide in the air, in parts per million for each air quality sensor reporting to the ESS.

Note: The previously available requirement to retrieve carbon dioxide readings has been deprecated in NTCIP 1204 v04. This replacement was made because the previous range of allowable values was insufficient. The previously available requirement can be found in Section 3.5.2.3.6.2. See Annex D for further information regarding this change from NTCIP 1204 v03 to NTCIP 1204 v04.

3.5.2.3.6.11 Retrieve Nitric Oxide Reading

Upon request, the ESS shall return the current concentration of nitric oxide in the air, in parts per billion for each air quality sensor reporting to the ESS.

Note: The previously available requirement to retrieve nitric oxide readings has been deprecated in NTCIP 1204 v04. This replacement was made because the previous range of allowable values did not have enough precision, and the gas was incorrectly named. The previously available requirement can be found in Section 3.5.2.3.6.3. See Annex D for further information regarding this change from NTCIP 1204 v03 to NTCIP 1204 v04.

3.5.2.3.6.12 Retrieve Ozone Reading

Upon request, the ESS shall return the current concentration of ozone in the air, in parts per billion for each air quality sensor reporting to the ESS.

Note: The previously available requirement to retrieve ozone readings has been deprecated in NTCIP 1204 v04. This replacement was made because the previous range of allowable values was insufficient. The previously available requirement can be found in Section 3.5.2.3.6.6. See Annex D for further information regarding this change from NTCIP 1204 v03 to NTCIP 1204 v04.

3.5.2.3.7 Retrieve Water Level

Upon request, the ESS shall return the current depth of water, in centimeters, from a user defined point for each water level sensor reporting to the ESS. The current depth of water can be over a body of water, such as a stream or a reservoir, or the current depth of water on a roadway pavement, such as an underpass. This requirement is concerned with the water depth in bodies of water or the pavement surface for flooding concerns, as opposed to requirements 3.5.2.3.3.2.f or 3.5.2.3.3.3.f, water film depth, which are concerned about icing or hydroplaning on the pavement surface.

3.5.2.3.8 Retrieve Snapshot

Upon request, the ESS shall return a copy of the specified snapshot image.

© 2022 AASHTO / ITE / NEMA Do Not Copy Without Written Permission

3.5.2.3.9 Retrieve Snapshot Camera Configuration

Upon request, the ESS shall return the location in which new snapshots are stored, the textual description of the location to which the camera points and the filename to be used when storing new snapshots.

Note: This requirement was revised in NTCIP 1204 v03 to more accurately reflect the design.

3.5.2.3.10 Retrieve Sensor Profile with Mobile Sources

Upon request, the ESS shall return a list of records recorded by the ESS over a period of time, with each record containing the below information about the mobile station. Each piece of information shall be present if the data is supported by the implementation and is valid. If the piece of information is invalid or not supported by the implementation, that piece of information shall be omitted.

a) the location of the mobile platform consisting of the latitude, longitude, and height. The latitude and longitude are in microdegrees (10^{-6} degrees). The height of the mobile platform (ESS) is in meters above mean sea level, and is measured to the surface under the vehicle;
b) the speed of the mobile platform in kilometers per hour;
c) the bearing (direction of travel) of the mobile platform in degrees, measured clockwise from True North;
d) the distance traveled, in meters, by the mobile platform from a reference point;
e) wind data (See Section 3.5.2.3.2.2);
f) air temperature (See Section 3.5.2.3.2.3);
g) precipitation presence (See Section 3.5.2.3.2.6.4);
h) precipitation rate (See Section 3.5.2.3.2.6.5);
i) precipitation totals (See Section 3.5.2.3.2.6.6);
j) visibility conditions (See Section 3.5.2.3.2.8);
k) atmospheric pressure (See Section 3.5.2.3.2.10);
l) relative humidity (See Section 3.5.2.3.2.11);
m) adjacent snow depth (See Sections 3.5.2.3.3.4);
n) roadway snow depth (See Sections 3.5.2.3.3.5);
o) roadway ice thickness (See Section 3.5.2.3.3.6);
p) the freeze point on the pavement surface at which the existing solution on the roadway freezes, in tenths of degrees Celsius;
q) depth of any water/solution film on the pavement surface, in tenths of a millimeter;
r) salinity of any water/solution film on the pavement surface, in parts per one hundred thousand, by weight;
s) percentage of ice on the surface;
t) current pavement surface condition (See Section 3.5.2.3.3.8);
u) forecasted pavement surface condition (See Section 3.5.2.3.3.9);
v) measured roadway friction coefficient (See Section 3.5.2.3.3.10);
w) type and intensity of the current precipitation situation (See Section 3.5.2.3.5.2);
x) assessment of the wind situation (See Section 3.5.2.3.5.1);
y) assessment of the visibility situation (See Section 3.5.2.3.5.4);
z) assessment of the cloud situation (See Section 3.5.2.3.5.7);
aa) assessment of the ground state next to the roadway (See Section 3.5.2.3.5.8);
bb) assessment of the pavement state (See Section 3.5.2.3.5.9); and
cc) date and time of the observation recorded, in seconds.

3.5.2.4 Sensor Control Requirements

Requirements for controlling a Sensor Manager follow.

 © 2022 AASHTO / ITE / NEMA

3.5.2.4.1 Capture Snapshot Image

Upon request, the ESS shall capture, and store to a temporary location, the current image (snapshot) from the specified attached camera.

3.5.2.4.2 Delete Snapshot

Upon request, the ESS shall delete the specified snapshot image.

3.5.2.4.3 Copy Snapshot - [Obsolete]

Note: This requirement was Deprecated from NTCIP 1204 v03. Requirement 3.5.2.4.3 was determined to be redundant with Section 3.5.3.1.3 and is more appropriately defined with PTS requirements (i.e., according to the terms used in NTCIP 1204 v03, the ESS Manager does not include pavement treatment information; that information would be stored in the PTS Manager.)

Note: This requirement was added in NTCIP 1204 v02; however, it was later determined that FTP does not support a copy operation. This requirement had been replaced with the ability to define a sequence number in the filename. See Section 3.6.24.

3.5.3 PTS Manager Requirements

Requirements for managing a PTS Manager follow.

3.5.3.1 PTS Configuration Requirements

Requirements for configuring a PTS Manager follow.

3.5.3.1.1 Retrieve Stationary Pavement Treatment Configuration

Upon request, the PTS shall return the configuration data for a stationary pavement treatment system identifying:

a) the pavement sensors that the PTS monitors to determine when to trigger the sprayers;
b) the duration in milliseconds required for a signal to activate the sprayer;
c) the number of pavement treatment products that the PTS has been programmed for; and
d) for each pavement treatment product, the pavement treatment product type, pavement treatment form and the percentage mix (by weight). Pavement treatment product types supported are sand, dirt, gravel, cinders, water, enhancedSalts, NaCl, CaCl, MgCl, CMA, KAC, NaFormate, NaA and other. Pavement treatment forms supported are dry, preset, liquid, and other.

A pavement treatment product is a chemical that can be applied to the roadway to de-ice or prevent icing of the pavement. This requirement allows a transportation system operator to determine what pavement treatments may be applied by the PTS.

3.5.3.1.2 Configure Stationary Pavement Treatment System

Upon request, the PTS shall change the configuration for a stationary pavement treatment system identifying:

a) the pavement sensors that the PTS monitors to determine when to trigger the sprayers;
b) the duration in milliseconds required for a signal to activate the sprayer;
c) the number of pavement treatment products that the PTS has been programmed for; and
d) for each pavement treatment product, the pavement treatment type, pavement treatment form and the percentage mix (by weight). Pavement treatment product types supported are: sand, dirt, gravel,

© 2022 AASHTO / ITE / NEMA Do Not Copy Without Written Permission

cinders, water, enhancedSalts, NaCl, CaCl, MgCl, CMA, KAC, NaFormate, NaA and other. Pavement treatment forms supported are: dry, preset, liquid, and other.

3.5.3.1.3 Retrieve Mobile Pavement Treatment Configuration [Versions 01 to 03 Only - Deprecated in v04]

Note: This requirement was used in NTCIP 1204 v01 to v03, but has been replaced in NTCIP 1204 v04. This replacement was made because the compressed data is no longer used. The replacement can be found in Section 3.5.3.1.5. See Annex D for further information regarding this change from v03 to v04 of NTCIP 1204.

3.5.3.1.4 Configure Mobile Pavement Treatment System

Upon request, the PTS shall change the configuration for a mobile pavement treatment system identifying:

a) the quantity of treatment being applied in kilograms per lane kilometer;
b) the width of the spread of treatment in meters;
c) the minimum amount of time the sprayer needs to detect a signal to activate and the duration to stay active; and
d) for each pavement treatment product that the PTS has been programmed for, the pavement treatment type, pavement treatment form and the percentage mix (by weight). Pavement treatment product types supported are: sand, dirt, gravel, cinders, water, enhancedSalts, NaCl, CaCl, MgCl, CMA, KAC, NaFormate, NaA and other. Pavement treatment forms supported are: dry, preset, liquid, and other.

3.5.3.1.5 Retrieve Mobile Pavement Treatment Configuration

Upon request, the PTS shall return the configuration data for a mobile pavement treatment system identifying:

a) the quantity of pavement treatment being applied in kilograms per lane kilometer;
b) the width of the spread of treatment in meters; and
c) for each pavement treatment product that the PTS has been programmed for, the pavement treatment type, pavement treatment form and the percentage mix (by weight). Pavement treatment product types supported are: sand, dirt, gravel, cinders, water, enhancedSalts, NaCl, CaCl, MgCl, CMA, KAC, NaFormate, NaA and other. Pavement treatment forms supported are: dry, preset, liquid, and other.

A pavement treatment product is a chemical that can be applied to the roadway to de-ice or prevent icing of the pavement. This requirement allows a transportation system operator to determine what pavement treatments may be applied by the PTS.

Note: The previously available requirement to retrieve the mobile pavement treatment configuration has been deprecated in NTCIP 1204 v04. This replacement was made because compressed data was deprecated. The previously available requirement can be found in Section 3.5.3.1.3. See Annex D for further information regarding this change from v03 to v04 of NTCIP 1204.

3.5.3.2 PTS Status Monitoring Requirements

Requirements for monitoring the status of a PTS Manager follow.

 © 2022 AASHTO / ITE / NEMA

3.5.3.2.1 Retrieve Pavement Treatment Status

Upon request, the PTS shall return the current status of the sprayer and the number of spray events that have occurred on a pavement treatment system. The status consists of:

a) If the sprayer is active (spraying), inactive (not spraying), or other;
b) a counter indicating the number of signal events that have occurred;
c) the date and time the sprayer last received a signal event;
d) a counter indicating the number of active events that have occurred;
e) a counter indicating the number of inactive events that have occurred;
f) the date and time the sprayer of the last active event;
g) the date and time the sprayer of the last inactive event; and
h) the state of readiness of the sprayer. The valid values for status is ok, tank low, error, other (unknown or initial status).

3.5.3.3 PTS Data Retrieval Requirements

Requirements for retrieving data from a PTS Manager follow.

3.5.3.3.1 Retrieve Pavement Treatment Profile with Mobile Sources

Upon request, a mobile PTS shall return a list of records recorded by the PTS over a period of time, with each record containing the below information about the mobile PTS. Each piece of information shall be present if the data is supported by the implementation and is valid. If the piece of information is invalid or not supported by the implementation, that piece of information shall be omitted.

a) the location of the mobile platform consisting of the latitude, longitude, and height. The latitude and longitude are in microdegrees (10^{-6} degrees). The height of the mobile platform (ESS) is in meters above mean sea level, and is measured to the surface under the vehicle;
b) the speed of the mobile platform in kilometers per hour;
c) the bearing (direction of travel) of the mobile platform in degrees, measured clockwise from True North;
d) the distance traveled, in meters, by the mobile platform from a reference point;
e) the quantity of treatment being applied in kilograms per lane kilometer;
f) the width of the spread of treatment in meters; and
g) for each pavement treatment product that the PTS has been programmed for, the pavement treatment type, pavement treatment form and the percentage mix (by weight). Pavement treatment product types supported are: sand, dirt, gravel, cinders, water, enhancedSalts, NaCl, CaCl, MgCl, CMA, KAC, NaFormate, NaA and other. Pavement treatment forms supported are: dry, preset, liquid, and other.

3.5.3.4 PTS Control Requirements

Requirements for controlling a PTS Manager follow.

3.5.3.4.1 Set PTS Operational Mode

Upon request, the stationary PTS shall change its operational mode to that requested. Valid operational modes are:

a) Off, which shall prevent any operation of the sprayer;
b) Manual, which shall allow manual activation of the sprayer; and
c) Automatic, which shall allow either manual activation or activation based on internal logic per the configuration parameters.

© 2022 AASHTO / ITE / NEMA Do Not Copy Without Written Permission

3.5.3.4.2 Manually Activate PTS Sprayer

Upon request, the stationary PTS shall trigger the sprayer to spray its pavement treatment solution. The trigger shall be activated for the configured duration period.

3.5.4 Backward Compatibility Requirements

The following define the requirements for backward compatibility.

3.5.4.1 NTCIP 1204 v01 Wind Sensor Meta Data

Upon request, the ESS shall return the relative height of the first wind sensor connected to the ESS in the NTCIP v01 format.

3.5.4.2 NTCIP 1204 v01 Average Wind Sensor Data

Upon request, the ESS shall return the average wind speed and direction for the first wind sensor in the NTCIP 1204 v01 format.

3.5.4.3 NTCIP 1204 v01 Spot Wind Sensor Data

Upon request, the ESS shall return the spot wind speed and direction for the first wind sensor in the NTCIP 1204 v01 format.

3.5.4.4 NTCIP 1204 v01 Wind Gust Data

Upon request, the ESS shall return the wind gust speed and direction for the first sensor in the NTCIP 1204 v01 format.

3.5.4.5 NTCIP 1204 v01 Wind Situation

Upon request, the ESS shall return the assessment of the wind situation (e.g., calm, light breeze, gale, gusty, etc.) in the NTCIP 1204 v01 format.

3.5.4.6 NTCIP 1204 v01 Water Depth

Upon request, the ESS shall return the water depth as measured by the first sensor in the NTCIP 1204 v01 format.

3.5.4.7 NTCIP 1204 v01 Solar Radiation

Upon request, the ESS shall return the solar radiation in the NTCIP 1204 v01 format.

3.5.4.8 NTCIP 1204 v01 Surface Water Depth

Upon request, the ESS shall return the surface water depth in the NTCIP 1204 v01 format.

3.5.4.9 NTCIP 1204 v01 Surface Conductivity

Upon request, the ESS shall return the surface conductivity in the NTCIP 1204 v01 format.

Note: The NTCIP 1204 v01 definition was ambiguous and resulted in interoperability problems.

3.5.4.10 NTCIP 1204 v02 Station Meta Data Block

Upon request, the ESS shall return the Station Meta Data Block in the NTCIP 1204 v02 format.

Do Not Copy Without Written Permission © 2022 AASHTO / ITE / NEMA

3.5.4.11 NTCIP 1204 v02 Weather Block

Upon request, the ESS shall return the Weather Block in the NTCIP 1204 v02 format.

3.5.4.12 NTCIP 1204 v02 Pavement Block

Upon request, the ESS shall return the Pavement Block in the NTCIP 1204 v02 format.

3.5.4.13 NTCIP 1204 v03 Retrieve External Port Information

Upon request, the ESS shall return the number of auxiliary ports and the following information for each port in the NTCIP 1204 v03 format:

a) an indication of whether the port is analog or digital;
b) a description of the port;
c) an indication of the port resolution; and
d) an indication of whether the port can be used for input, output, or both.

3.5.4.14 NTCIP 1204 v03 Configure Port Information

Upon request, the ESS shall store the indicated description for the indicated auxiliary port in the NTCIP 1204 v03 format.

3.5.4.15 NTCIP 1204 v03 Monitor Status of External Device

Upon request, the ESS shall return the following information for the indicated auxiliary port in the NTCIP 1204 v03 format:

a) Current state; and
b) Last commanded state.

3.5.4.16 NTCIP 1204 v03 Control External Device

Upon request, the ESS shall activate or de-activate, as requested, a simple external device connected through an analog auxiliary port in the NTCIP 1204 v03 format.

3.5.4.17 NTCIP 1204 v03 Station Metadata Block

Upon request, the ESS shall return the Station Metadata Block, containing information about the station, in the NTCIP 1204 v03 format.

3.5.4.18 NTCIP 1204 v03 Mobile ESS Data Block

Upon request, the ESS shall return the Mobile ESS Data Block, containing information about the mobile station in the NTCIP 1204 v03 format.

3.5.4.19 NTCIP 1204 v01-v03 Atmospheric Pressure Height

Upon request, the ESS shall return the relative height of the atmospheric pressure sensor in the NTCIP 1204 v01-v03 format.

© 2022 AASHTO / ITE / NEMA Do Not Copy Without Written Permission

3.5.4.20 NTCIP 1204 v03 Weather Profile with Mobile Sources

Upon request, the ESS shall return a list of records recorded by the ESS over a period of time in the NTCIP 1204 v01-v03 format.

3.5.4.21 NTCIP 1204 v01-v03 Atmospheric Pressure

Upon request, the ESS shall return the current atmospheric pressure in the NTCIP 1204 v01-v03 format.

3.5.4.22 NTCIP 1204 v01-v03 Humidity

Upon request, the ESS shall return the current humidity, dew point, and wet bulb temperature in the NTCIP 1204 v01-v03 format.

3.5.4.23 NTCIP 1204 v01-v03 Precipitation Presence

Upon request, the ESS shall return an indication of whether precipitation is currently detected in the NTCIP 1204 v01-v03 format.

3.5.4.24 NTCIP 1204 v01-v03 Precipitation Rates

Upon request, the ESS shall return the rate at which precipitation is currently falling and the start and stop time of the latest precipitation in the NTCIP 1204 v01-v03 format.

3.5.4.25 NTCIP 1204 v01-v03 Precipitation Totals

Upon request, the ESS shall return the total amounts of precipitation recorded over the last one hour, three hours, six hours, twelve hours, and 24 hours in the NTCIP 1204 v01-v03 format.

3.5.4.26 NTCIP 1204 v03 Solar Radiation

Upon request, the ESS shall return the solar radiation readings in the NTCIP 1204 v03 format.

3.5.4.27 NTCIP 1204 v03 Weather Block

Upon request, the ESS shall return the Weather Block in the NTCIP 1204 v03 format.

3.5.4.28 NTCIP 1204 v01-v03 Pavement Surface Condition

Upon request, the ESS shall return the current temperature of the pavement surface and shall indicate any presence of moisture on the surface in the NTCIP 1204 v01-v03 format.

3.5.4.29 NTCIP 1204 v03 Pavement Condition Block

Upon request, the ESS shall return the Pavement Condition Block in the NTCIP 1204 v03 format.

3.5.4.30 NTCIP 1204 v01-v03 Adjacent Snow Depth

Upon request, the ESS shall return the current depth of snow adjacent to the traveled way (e.g., roadway, rail line, etc.) in the NTCIP 1204 v01-v03 format. The depth shall be representative of the snow depth in the area, exclusive of plowed areas and snow drifts.

3.5.4.31 NTCIP 1204 v01-v03 Roadway Snow Depth

Upon request, the ESS shall return the current depth of packed and unpacked snow on the roadway pavement (i.e., roadway, rail line, etc.) in the NTCIP 1204 v01-v03 format.

Do Not Copy Without Written Permission © 2022 AASHTO / ITE / NEMA

3.5.4.32 NTCIP 1204 v01-v03 Roadway Ice Thickness

Upon request, the ESS shall return the current thickness of ice on the roadway pavement in the NTCIP 1204 v01-v03 format.

3.5.4.33 NTCIP 1204 v03 Subsurface Condition Block

Upon request, the ESS shall return the Subsurface Condition Block in the NTCIP 1204 v03 format.

3.5.4.34 NTCIP 1204 v01-v03 Cloud Situation

Upon request, the ESS shall return the cloud situation assessment in the NTCIP 1204 v01-v03 format.

3.5.4.35 NTCIP 1204 v01-v03 Ground State

Upon request, the ESS shall return the ground state assessment in the NTCIP 1204 v01-v03 format.

3.5.4.36 NTCIP 1204 v01-v03 Pavement State

Upon request, the ESS shall return the pavement state assessment in the NTCIP 1204 v01-v03 format.

3.5.4.37 NTCIP 1204 v03 Air Quality Block

Upon request, the ESS shall return the Air Quality Block in the NTCIP 1204 v03 format.

3.5.4.38 NTCIP 1204 v03 Mobile Pavement Treatment Block

Upon request, the ESS shall return the Mobile Pavement Treatment Configuration Block in the NTCIP 1204 v03 format.

3.5.4.39 NTCIP 1204 v01-03 Carbon Dioxide Reading

Upon request, the ESS shall return the carbon dioxide reading in the NTCIP 1204 v01-v03 format.

3.5.4.40 NTCIP 1204 v01-03 Nitric Oxide Reading

Upon request, the ESS shall return the nitric oxide (incorrectly called nitrous oxide) reading in the NTCIP 1204 v01-v03 format.

3.5.4.41 NTCIP 1204 v01-03 Ozone Reading

Upon request, the ESS shall return the ozone reading in the NTCIP 1204 v01-v03 format.

3.6 Supplemental Non-Communications Requirements

Supplemental requirements for ESS follow. These requirements do not directly involve communications between the management station and the ESS, but, if the supplemental requirement is selected in the PRL, the ESS shall fulfill the stated requirement to claim conformance to NTCIP 1204 v04.

3.6.1 Required Number of Atmospheric Pressure Sensors

The ESS shall support the number of atmospheric pressure sensors as defined by the agency specification. If the agency specification does not define the number of atmospheric pressure sensors, the number of atmospheric pressure sensors supported by the ESS is one (1).

© 2022 AASHTO / ITE / NEMA Do Not Copy Without Written Permission

3.6.2 Required Number of Wind Sensors

The ESS shall support the number of wind sensors as defined by the agency specification. If the agency specification does not define the number of wind sensors, the number of wind sensors supported by the ESS is one (1).

3.6.3 Required Number of Temperature Sensors

The ESS shall support the number of temperature sensors as defined by the agency specification. If the agency specification does not define the number of temperature sensors, the number of temperature sensors supported by the ESS is one (1).

3.6.4 Required Number of Humidity Sensors

The ESS shall support the number of humidity sensors as defined by the agency specification. If the agency specification does not define the number of humidity sensors, the number of humidity sensors supported by the ESS is one (1).

3.6.5 Required Number of Precipitation Sensors

The ESS shall support the number of precipitation sensors as defined by the agency specification. If the agency specification does not define the number of precipitation sensors, the number of precipitation sensors supported by the ESS is one (1).

3.6.6 Required Number of Solar Radiation Sensors

The communications interface only allows the ESS to return a single set of values for the solar radiation; however, these values may be derived from multiple sensors. The ESS shall support the number of solar radiation sensors as defined by the agency specification. If the agency specification does not define the number of solar radiation sensors, the number of solar radiation sensors supported by the ESS is one (1).

3.6.7 Required Number of Visibility Sensors

The communications interface only allows the ESS to return a single value for the visibility; however, this value may be derived from multiple sensors. The ESS shall support the number of visibility sensors as defined by the agency specification. If the agency specification does not define the number of visibility sensors, the number of visibility sensors supported by the ESS is one (1).

3.6.8 Required Number of Pavement Sensors

The ESS shall support the number of pavement sensors as defined by the agency specification. If the agency specification does not define the number of pavement sensors, the number of pavement sensors supported by the ESS is one (1).

3.6.9 Active Pavement Treatment Sensors

The ESS shall determine the predicted freeze-point of the pavement by actively freezing a portion of the mixture on the roadway surface.

3.6.10 Passive Pavement Treatment Sensors

The ESS shall determine the freeze point of the pavement through an algorithm that does not require the freezing of the chemical mixture on the roadway surface.

Do Not Copy Without Written Permission © 2022 AASHTO / ITE / NEMA

Note: Different makes and models of equipment may use different algorithms for a variety of reasons. To overcome problems that may result from this variation, NTCIP 1204 v03 links each pavement sensor with a row of the module table so that a system can identify the make and model of the specific pavement sensor.

3.6.11 Required Number of Subsurface Sensors

The ESS shall support the number of subsurface sensors as defined by the agency specification. If the agency specification does not define the number of subsurface sensors, the number of subsurface sensors supported by the ESS is one (1).

3.6.12 Required Number of Pavement Treatment Products

The ESS shall support the number of pavement treatment products as defined by the agency specification. If the agency specification does not define the number of pavement treatment products, the number of pavement treatment products supported by the ESS is one (1).

3.6.13 Required Number of Carbon Monoxide Sensors

The communications interface only allows the ESS to return a single value for carbon monoxide; however, this value may be derived from multiple sensors. The ESS shall support the number of carbon monoxide sensors as defined by the agency specification. If the agency specification does not define the number of carbon monoxide sensors, the number of carbon monoxide sensors supported by the ESS is one (1).

3.6.14 Required Number of Carbon Dioxide Sensors

The communications interface only allows the ESS to return a single value for carbon dioxide; however, this value may be derived from multiple sensors. The ESS shall support the number of carbon dioxide sensors as defined by the agency specification. If the agency specification does not define the number of carbon dioxide sensors, the number of carbon dioxide sensors supported by the ESS is one (1).

3.6.15 Required Number of Nitric Oxide Sensors

The communications interface only allows the ESS to return a single value for nitric oxide; however, this value may be derived from multiple sensors. The ESS shall support the number of nitric oxide sensors as defined by the agency specification. If the agency specification does not define the number of nitric oxide sensors, the number of nitric oxide sensors supported by the ESS is one (1).

3.6.16 Required Number of Nitrogen Dioxide Sensors

The communications interface only allows the ESS to return a single value for nitrogen dioxide; however, this value may be derived from multiple sensors. The ESS shall support the number of nitrogen dioxide sensors as defined by the agency specification. If the agency specification does not define the number of nitrogen dioxide sensors, the number of nitrogen dioxide sensors supported by the ESS is one (1).

3.6.17 Required Number of Sulfur Dioxide Sensors

The communications interface only allows the ESS to return a single value for sulfur dioxide; however, this value may be derived from multiple sensors. The ESS shall support the number of sulfur dioxide sensors as defined by the agency specification. If the agency specification does not define the number of sulfur dioxide sensors, the number of sulfur dioxide sensors supported by the ESS is one (1).

© 2022 AASHTO / ITE / NEMA Do Not Copy Without Written Permission

3.6.18 Required Number of Ozone Sensors

The communications interface only allows the ESS to return a single value for ozone; however, this value may be derived from multiple sensors. The ESS shall support the number of ozone sensors as defined by the agency specification. If the agency specification does not define the number of ozone sensors, the number of ozone sensors supported by the ESS is one (1).

3.6.19 Required Number of Small Particulate Matter Sensors

The communications interface only allows the ESS to return a single value for small particulate matter; however, this value may be derived from multiple sensors. The ESS shall support the number of small particulate matter sensors as defined by the agency specification. If the agency specification does not define the number of small particulate matter sensors, the number of small particulate matter sensors supported by the ESS is one (1).

3.6.20 Required Number of Snapshot Cameras

The ESS shall support the number of snapshot cameras as defined by the agency specification. If the agency specification does not define the number of snapshot cameras, the number of snapshot cameras supported by the ESS is one (1).

3.6.21 Maximum Response Time for Requests

The ESS shall process all requests in accordance with all of the rules of the relevant base standards (i.e., NTCIP 1103 v03 and NTCIP 2303:2001), including updating the value the RPU is storing internally (e.g., database) and initiating the transmission of the appropriate response (assuming that the ESS has permission to transmit) within the Maximum Response Time. This is a requirement on the device to generate the response message within the device, and not on the transmission, which may dependent on the communications system. If the agency specification does not indicate the Maximum Response Time, the Maximum Response Time shall be 100 milliseconds. The Maximum Response Time is measured as the time between the receipt of the last byte of the request and the transmission of the first byte of the response.

3.6.22 Required Number of Water Level Sensors

The ESS shall support the number of water level sensors as defined by the agency specification. If the agency specification does not define the number of water level sensors, the number of water level sensors supported by the ESS is one (1).

3.6.23 Support Camera Number in Filename

The ESS shall support the ability to specify a field in the filename parameter that is replaced by the camera number when a snapshot is saved. This is the '<camera>' field as defined in Section 5.16.3.6.

3.6.24 Support Sequence Number in Filename

The ESS shall support the ability to specify a field in the filename parameter that is replaced by the current sequence number when a snapshot is saved. This is the '<sequence>' field as defined in Section 5.16.3.6.

3.6.25 Support Date in Filename

The ESS shall support the ability to specify a field in the filename parameter that is replaced by the current UTC date when a snapshot is saved. This is the '<date>' field as defined in Section 5.16.3.6.

3.6.26 Support Time in Filename

The ESS shall support the ability to specify a field in the filename parameter that is replaced by the current UTC time when a snapshot is saved. This is the '<time>' field as defined in Section 5.16.3.6.

Do Not Copy Without Written Permission © 2022 AASHTO / ITE / NEMA

3.6.27 Support Long Filenames

The ESS shall support the ability to specify filenames up to 255 characters in length, including any extension.

3.6.28 Required Number of Small Particulate Matter (2.5) Sensors

The communications interface only allows the ESS to return a single value for small particulate matter 2.5 microns or less in diameter; however, this value may be derived from multiple sensors. The ESS shall support the number of small particulate matter (≤ 2.5 microns diameter) sensors as defined by the agency specification. If the agency specification does not define the number of small particulate matter (≤ 2.5 microns diameter) sensors, the number of small particulate matter (2.5) sensors supported by the ESS is one (1).

3.6.29 Maximum Transmission Start Time

Upon satisfying a condition that triggers a transmission (exception-based reporting), the device shall begin transmission of the response message for that specified condition to the management station within the defined Maximum Transmission Start Time in units of milliseconds. Unless the agency specification indicates otherwise, the Maximum Transmission Start Time shall be 100 milliseconds. The Maximum Transmission Start Time is measured as the time between the exception based monitoring is first detected and the transmission of the first byte of the report.

© 2022 AASHTO / ITE / NEMA Do Not Copy Without Written Permission

Section 4
Dialogs [Normative]

Section 4 defines the dialogs (i.e., sequence of data exchanges) that fulfill various Data Exchange requirements defined in Section 3.5. As SNMP communications are largely driven by the management station, most of the requirements define how the device shall respond to the various possible actions a management station might take.

The NTCIP standards effort is based on SNMP. This protocol offers a high degree of flexibility as to how the management station structures its requests. For example, with SNMP, the management station can do any of the following:

a) Send only those requests that are critical at the current time, whereas a standardized dialog typically sends requests relating to all associated data, regardless of whether it is critical for current purposes
b) Combine a number of requests in a single packet, whereas a standardized dialog dictates the exact contents of each packet
c) Separate a group of requests into multiple packets, whereas a standardized dialog dictates the exact contents of each packet
d) Interweave requests from multiple dialogs, whereas a standardized dialog dictates the exact ordering of messages, which are not interrupted with other messages

This flexibility can be a powerful tool allowing a management system to optimize the use of communication facilities, which is the primary reason that SNMP was chosen as the core NTCIP protocol. However, the flexibility also means that there are numerous allowable variations in the management process that a management station may choose to use and that an agent shall support to conform to NTCIP 1204.

Unfortunately, this flexibility presents a challenge to ensuring interoperability.

To overcome this complication, Section 4 defines a lowest common denominator approach to communications between a management station and a device. It defines the standardized dialog for each Data Exchange Requirement. Management stations may support other dialogs to fulfill these same requirements, as long as these dialogs are consistent with the rules defined in NTCIP 1204 v04. Such a management station is termed a “consistent management station.” A consistent management station interoperates with any “conformant” device.

A “conformant management station” is required to offer a mode in which it only uses the standardized dialogs as defined in Section 4. With this limited definition, there is relatively little variability in what constitutes a conformant management station. Thus, fully testing a management station for conformance is a relatively straight forward process that can be done within the practical constraints faced by most procuring agencies. Thus, a conformant management station provides an agency with a much greater chance of achieving interoperability with off-the-shelf devices that have been tested against NTCIP 2104 v03, and the designation of such a system is intended to provide a guaranteed base level of interoperability.

The rules for the standardized dialogs follow:

a) The dialogs are defined by a sequence of GET or SET requests. These requests shall equate to the GET and SET operations defined in Annexes G.1and G.3 and shall be transmitted as a single message.

Do Not Copy Without Written Permission © 2022 AASHTO / ITE / NEMA

b) The contents of each request are identified by an object name. Each object name consists of an object type and an instance identifier. Definitions of each object type are provided in Section 5 and NTCIP 1201 V03. The meaning of the instance identifier is provided by these same definitions coupled with standard SNMP rules (see RFC 1212).
c) Each message shall contain all of the objects as shown, unless otherwise indicated
d) A message shall not contain any other objects
e) The contents of each message sent by the management station may appear in any order
   Note: Ideally, the order of objects should match the order as shown in NTCIP 1204 v04 to provide the highest probability of interoperability. However, it is recognized that many implementations may use off-the-shelf software, which may prevent the designation of an exact ordering of objects and as a result, this ordering is not a requirement of NTCIP 1204 v04.
f) After sending a message, the management station shall not transmit any other data across the communications channel until the earlier of:
   1) The management station receiving a response from the device; or
   2) The expiration of the maximum response time.
g) If the response indicates an error occurred in the operation, the management station shall exit the process, unless specific error-handling rules are specified by the dialog.
h) Dialogs containing a sequence of only GET requests may request objects in any order.

However, since consistent management stations can alter the order of requests, this standard defines rules for when certain data exchanges are allowed. Unless otherwise indicated, a conformant device shall allow an object to be retrieved (through a GET request) or altered (through a SET request, if the object is writable) at any time. However, the access to some data is associated with a state machine, and Section 4.2.16 defines the various rules that apply to these state machines.

Finally, Section 4.4 presents an overview of all of the data defined by this standard, prior to presenting the complete definition for each piece of data in Section 5.

4.1 Tutorial [Informative]

The Requirements Traceability Matrix (RTM) in Annex A identifies the standardized dialog that can be used to achieve each of the data exchange requirements defined in Section 3.5. Simple data exchange requirements reference one of the generic SNMP dialogs along with a list of data elements. These equate to a single message being sent (e.g., a GET request) containing the referenced data elements followed by the appropriate response per the generic dialog specification.

Section 4 defines the standardized dialogs for the more complicated data exchange requirements. Each of these dialogs is defined by a number of steps. Many of the steps reference data elements that are defined in Section 5. These data elements are also shown in the corresponding row of the RTM along with their precise section number.

The dialogs may also be accompanied by an informative figure that provides a graphical depiction of the normative text. The figures conform to the Unified Modeling Language and depict the management station as an outside actor sending a series of messages to the device and the device returning responses. If there is any conflict between the figure and the text, the text takes precedence.

4.2 Specified Dialogs

4.2.1 Capture Snapshot Image

The standardized dialog for a management station to capture a snapshot image shall be:

a) The management station shall SET essSnapshotCameraCommand.x to the value of *captureSnapshot (2)*.
b) The ESS shall take the picture with camera x.

© 2022 AASHTO / ITE / NEMA Do Not Copy Without Written Permission

c) The ESS shall store the captured picture to the directory essSnapshotCameraStoragePath.x and to the file essSnapshotCameraFilename.x.
d) The management station shall repeatedly GET essSnapshotCameraCommand.x until it equals *ready (1)*.
e) The management station shall GET essSnapshotCameraError.x to verify the picture was successful.
f) The ESS shall respond with the indicated value.

This process is depicted in the UML diagram in Figure 8.

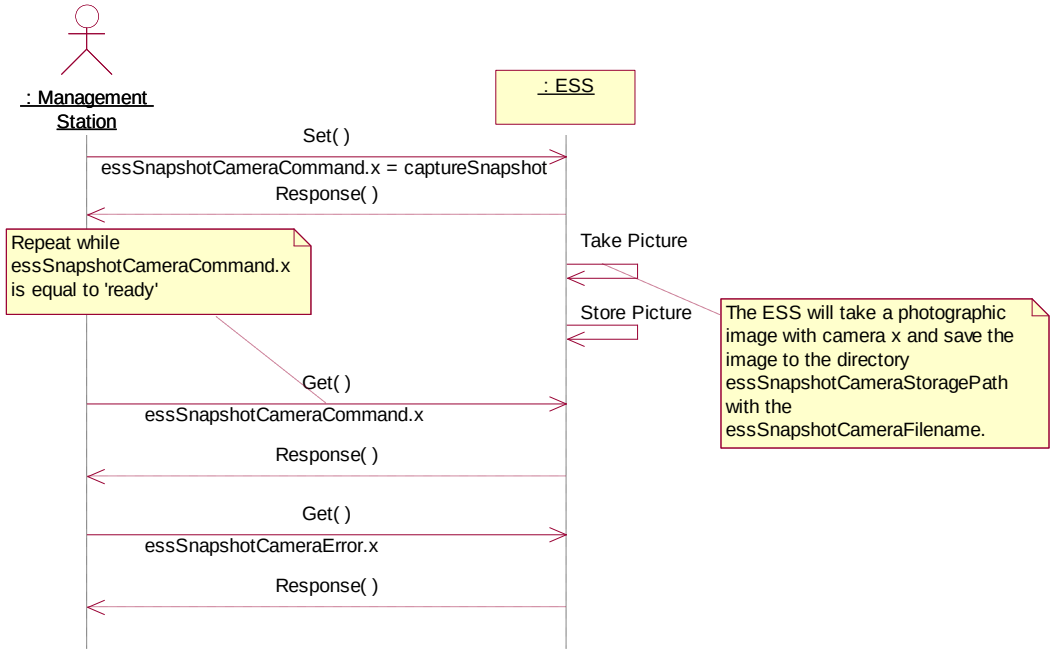

Figure 8 Dialog for Capture Snapshot Image

4.2.2 Retrieve Snapshot

The standardized dialog for a management station to retrieve a snapshot image shall conform to NTCIP 2303:2001.

The device shall adhere to the following rules:

a) The login directory is the root directory and a user cannot traverse to any parent directories.
b) Subdirectories may be used.
c) FTP access user name and password shall be defined in the agency specification.
d) Device shall use FTP port "21."
e) Zero or one FTP login session with the specification username shall exist at any given time.

4.2.3 Delete Snapshot

The standardized dialog for a management station to delete a snapshot image shall conform to NTCIP 2303:2001 and to the rules defined in Section 4.2.

Do Not Copy Without Written Permission © 2022 AASHTO / ITE / NEMA

4.2.4 Copy Snapshot—Deprecated in v03

Note: This dialog was added in NTCIP 1204 v02; however, it was later determined that FTP does not support a copy operation. It has been replaced with the ability to define a sequence number in the filename. See Section 3.6.24.

4.2.5 Retrieve Stationary Pavement Treatment Configuration

The standardized dialog for a management station to retrieve the pavement treatment configuration for a stationary ESS shall be as follows:

a) The management station shall GET numEssTreatments.0.
b) For each treatment from 1 to the number of treatments, the management station shall GET the following objects:
   1) essPaveTreatProductType.x
   2) essPaveTreatProductForm.x
   3) essPercentProductMix.x
c) The management station shall GET the following objects:
   1) ptsSignalDuration
   2) ptsMonitoringDetectors

Where,

x = the index of the treatment

4.2.6 Retrieve Icing Conditions—Passive

The standardized dialog for a management station to retrieve the current and predicted icing conditions from a passive sensor shall be as follows:

a) (Precondition) The management station is aware of the sensor from which data is desired.
b) The management station shall GET the following objects:
   1) essSurfaceTemperature.x
   2) essPavementTemperature.x
   3) essSurfaceSalinity.x
   4) essSurfaceFreezePoint.x
   5) essSurfaceBlackIceSignal.x
   6) essPavementSensorError.x
c) The management station shall GET the following objects:
   1) essSurfaceIceOrWaterDepth.x
   2) essSurfaceConductivityV2.x
   3) pavementSensorTemperatureDepth.x

   Note: These are NTCIP 1204 v02 objects that may result in a noSuchName error.
d) The management station shall GET numEssTreatments.0.
e) For each treatment from 1 to the number of treatments, the management station shall GET the following objects:
   1) essPaveTreatProductType.y
   2) essPaveTreatProductForm.y
   3) essPercentProductMix.y

© 2022 AASHTO / ITE / NEMA Do Not Copy Without Written Permission

Where,
x = the sensor index,
y = the index of the treatment

4.2.7 Configure Stationary Pavement Treatment System

The standardized dialog for a management station to configure a stationary pavement treatment system shall be as follows:

a) The management station shall GET numEssTreatments.0.
b) For each treatment from 1 to the number of treatments, the management station shall SET the following objects to the desired values:
   1) essPaveTreatProductType.x
   2) essPaveTreatProductForm.x
c) The management station shall SET every instance of essPercentProductMix.x to the desired values such that the total of all instances shall equal 100.
d) The management station shall SET the following objects to their desired values:
   1) ptsSignalDuration.0
   2) ptsMonitoringDetectors.0

Where,
x = the index of the treatment

4.2.8 Configure Passive Ice Detection Logic

The standardized dialog for a management station to configure the passive ice detection logic shall be as follows:

a) The management station shall GET numEssTreatments.0.
b) For each treatment from 1 to the number of treatments, the management station shall SET the following objects to the desired values:
   1) essPaveTreatProductType.x
   2) essPaveTreatProductForm.x
c) The management station shall set every instance of essPercentProductMix.x to the desired value such that the total of all instances shall equal 100.

Where,
x = the index of the treatment

4.2.9 Configure Mobile Pavement Treatment System

The standardized dialog for a management station to configure a mobile pavement treatment system shall be as follows:

a) The management station shall GET numEssTreatments.0.
b) For each treatment from 1 to the number of treatments, the management station shall SET the following objects to the desired values:
   1) essPaveTreatProductType.x
   2) essPaveTreatProductForm.x
c) The management station shall SET every instance of essPercentProductMix.x to the desired values such that the total of all instances shall equal 100.
d) The management station shall SET the following objects to their desired values:
   1) essPaveTreatmentAmount.0
   2) essPaveTreatmentWidth.0

Do Not Copy Without Written Permission © 2022 AASHTO / ITE / NEMA

Where,
x = the index of the treatment

4.2.10 Configure Snapshot Camera

The standardized dialog for a management station to configure a snapshot camera shall be as follows:

a) (Precondition) The management station shall be aware of which row in the table is to be configured.
b) For the specified row, the management station shall SET the following object to the desired value:
   1) essSnapshotCameraDescription.x
a) For the specified row, the management station shall SET the following object to the desired value:
   1) essSnapshotCameraFilename.x

Where,
x = the index of the snapshot camera

Note: The standardized dialog is divided into two steps for backward compatibility; older devices may not support the essSnapshotCameraFilename object. These devices store the files using a filename convention that is manufacturer-specific.

4.2.11 Retrieve Snapshot Camera Configuration

The standardized dialog for a management station to retrieve the snapshot camera configuration shall be as follows:

a) The management station shall GET essSnapshotNumberOfCameras.0.
b) For each snapshot camera from 1 to the number of cameras, the management station shall GET the following objects:
   1) essSnapshotCameraDescription.x
   2) essSnapshotCameraStoragePath.x
c) For each snapshot camera from 1 to the number of cameras, the management station shall GET the following object:
   1) essSnapshotCameraFilename.x

Where,
x = the index of the treatment

Note: The standardized dialog is divided into two steps for backwards compatibility; older devices may not support the essSnapshotCameraFilename object. These devices store the files using a filename convention that is manufacturer-specific.

4.2.12 Retrieve Precipitation Presence [Versions 01 to 03]

The standardized dialog for a management station to retrieve precipitation presence shall be as follows:

a) The management station shall GET essPrecipYesNo.0.
b) The management station shall GET precipitationSensorModelInformation.0.

Note: This is an NTCIP 1204 v02 object that may result in a noSuchName. This level of detail was not provided in NTCIP 1204 v01.

Note: To understand the sensor model information, the management station either needs to be aware of the contents of the Module Table prior to performing this dialog or to retrieve the information after performing the dialog.

© 2022 AASHTO / ITE / NEMA Do Not Copy Without Written Permission

4.2.13 Retrieve Solar Radiation [Versions 01 to 03]

The standardized dialog for a management station to retrieve solar radiation shall be as follows:

a) The management station shall GET essTotalSun.0.
b) The management station shall GET the following objects:
   1) essInstantaneousTerrestrialRadiation.0.
   2) essInstantaneousSolarRadiation.0.
   3) essTotalRadiation.0.
   4) essTotalRadiationPeriod.0.

   Note: These are NTCIP 1204 v02 objects that may result in a noSuchName error.
c) If the device responds with a noSuchName error, the management station shall GET essSolarRadiation.0

4.2.14 Retrieve Pavement Surface Condition

The standardized dialog for a management station to retrieve precipitation presence shall be as follows:

a) (Precondition) The management station shall be aware of which row of the table is to be retrieved.
b) The management station shall GET the following objects for the pavement sensor of interest:
   1) essSurfaceStatus.x
   2) essSurfaceTemperature.x
   3) essPavementSensorError.x
c) The management station shall GET pavementSensorModelInformation.x.
   Note: This is an NTCIP 1204 v02 object that may result in a noSuchName. This level of detail was not provided in NTCIP 1204 v01.

   Note: To understand the sensor model information, the management station either needs to be aware of the contents of the Module Table prior to performing this dialog or to retrieve the information after performing the dialog.

4.2.15 Retrieve Icing Conditions—Active

The standardized dialog for a management station to retrieve active icing condition information shall be as follows:

a) (Precondition) The management station shall be aware of which row of the table is to be retrieved.
b) The management station shall GET the following objects for the pavement sensor of interest:
   1) essSurfaceTemperature.x
   2) essPavementTemperature.x
   3) essSurfaceFreezePoint.x
   4) essSurfaceBlackIceSignal.x
   5) essPavementSensorError.x
c) The management station shall GET the following objects for the pavement sensor of interest:
   1) essSurfaceIceOrWaterDepth.x
   2) pavementSensorTemperatureDepth.x

   Note: These are NTCIP 1204 v02 objects that may result in a noSuchName error. This level of detail was not provided in NTCIP 1204 v01.

4.2.16 Retrieve Precipitation Presence

The standardized dialog for a management station to retrieve precipitation presence shall be as follows:

a) (Precondition) The management station shall be aware of which row of the table is to be retrieved.
b) The management station shall GET the following objects for the precipitation sensor of interest:

Do Not Copy Without Written Permission © 2022 AASHTO / ITE / NEMA

1) essPrecipYesNo.x
2) precipitationSensorModelInformation.x

Note: To understand the sensor model information, the management station either needs to be aware of the contents of the Module Table prior to performing this dialog or to retrieve the information after performing the dialog.

4.2.17 Retrieve Solar Radiation

The standardized dialog for a management station to retrieve solar radiation shall be as follows:

a) The management station shall GET radiationSensorTableNumSensors.0.
b) For each sensor from 1 to the number of solar radiation sensors, the management station shall GET the following objects:
   1) essTotalSunV4.x
   2) essInstantaneousTerrestrialRadiationV4.x.
   3) essInstantaneousSolarRadiationV4.x.
   4) essTotalRadiationV4.x.
c) The management station shall GET essTotalRadiationPeriod.0.

Where,

x = the index of the solar radiation sensor

4.2.18 Retrieve Mobile Pavement Treatment System

The standardized dialog for a management station to retrieve the configuration of a mobile pavement treatment system shall be as follows:

a) The management station shall GET numEssTreatments.0.
b) For each treatment from 1 to the number of treatments, the management station shall GET the following objects:
   1) essPaveTreatProductType.x
   2) essPaveTreatProductForm.x
   3) essPercentProductMix.x
c) The management station shall GET the following objects:
   1) essPaveTreatmentAmount.0
   2) essPaveTreatmentWidth.0

Where,

x = the index of the treatment

4.2.19 Retrieve Pavement Treatment Profile

The standardized dialog for a management station to retrieve the pavement treatment profile of a mobile pavement treatment system shall be as follows:

a) The management station shall GET the following objects:
   1) essLatitude.0
   2) essLongitude.0
   3) essVehicleSpeed.0
   4) essVehicleBearing.0
   5) essOdometer.0
   6) essReferenceHeight.0
   7) numEssTreatments.0.
b) For each treatment from 1 to the number of treatments, the management station shall GET the following objects:

© 2022 AASHTO / ITE / NEMA Do Not Copy Without Written Permission

1) essPaveTreatProductType.x
2) essPaveTreatProductForm.x
3) essPercentProductMix.x

c) The management station shall GET the following objects:
1) essPaveTreatmentAmount.0
2) essPaveTreatmentWidth.0

Where,
x = the index of the treatment

4.2.20 Retrieve Sensor Profile for Mobile Platforms

The standardized dialog for a management station to retrieve the sensor profile of a mobile station shall be as follows:

a) The management station shall GET the following objects:
1) globalTime.0
2) globalDaylightSaving.0

b) If supported, the management station shall GET the following objects:
1) essLatitude.0
2) essLongitude.0
3) essVehicleSpeed.0
4) essVehicleBearing.0
5) essOdometer.0
6) essReferenceHeight.0

c) If supported, for each wind sensor from 1 to the number of wind sensors, the management station shall GET the following objects:
1) windSensorAvgSpeed.x
2) windSensorAvgDirection.x
3) windSensorSpotSpeed.x
4) windSensorSpotDirection.x
5) windSensorGustSpeed.x
6) windSensorGustDirection.x
7) windSensorSituation.x

d) If supported, for each temperature sensor from 1 to the number of temperature sensors, the management station shall GET the following objects:
1) essAirTemperature.x

e) If supported, for each precipitation sensor from 1 to the number of precipitation sensors, the management station shall GET the following objects:
1) precipitationSensorPrecipYesNo.x
2) precipitationSensorPrecipRate.x
3) precipitationSensorSnowfallAccumRate.x
4) precipitationSensorPrecipSituation.x
5) precipitationSensorIceThickness.x
6) precipitationSensorPrecipitationStartTime.x
7) precipitationSensorPrecipitationEndTime.x
8) precipitationSensorPrecipitationOneHour.x
9) precipitationSensorPrecipitationThreeHours.x
10) precipitationSensorPrecipitationSixHours.x
11) precipitationSensorPrecipitationTwelveHours.x
12) precipitationSensorPrecipitation24Hours.x
13) essAdjacentSnowDepth.x
14) essRoadwaySnowDepth.x
15) essRoadwaySnowPackDepth.x

f) If supported, the management station shall GET the following objects:
1) essVisibility.0

 © 2022 AASHTO / ITE / NEMA

g) If supported, for each atmospheric sensor from 1 to the number of atmospheric sensors, the management station shall GET the following objects:
   1) essPressureSensorAtmosphericPressure.x
h) If supported, for each humidity sensor from 1 to the number of humidity sensors, the management station shall GET the following objects:
   1) humiditySensorRelativeHumidity.x
   2) humiditySensorWetbulbTemp.x
   3) humiditySensorDewpointTemp.x
i) If supported, for each pavement sensor from 1 to the number of pavement sensors, the management station shall GET the following objects:
   1) essSurfaceTemperature.x
   2) essSurfaceSalinity.x
   3) essSurfaceFreezePoint.x
   4) essPavementSensorError.x
   5) essSurfaceIceOrWaterDepth.x
   6) pavementSensorSurfaceCondition.x
   7) pavementSensorForecastCondition.x
   8) pavementSensorFrictionCoefficient.x
   9) pavementIcePercentage.x
j) If supported, the management station shall GET the following objects:
   1) essPrecipSituation.0
   2) essVisibilitySituation.0
   3) essMobileObservationGroundStateV4.0
   4) essMobileObservationPavementV4.0
   5) essCloudSituationV4.0

Where,

x = the index of the treatment

4.3 State Transition Diagrams

The following define the states for various object classes that may be supported by the device.

4.3.1 Pavement Treatment System State Transition Diagram

Figure 9 depicts the state transition diagram for the Pavement Treatment System class.

© 2022 AASHTO / ITE / NEMA Do Not Copy Without Written Permission

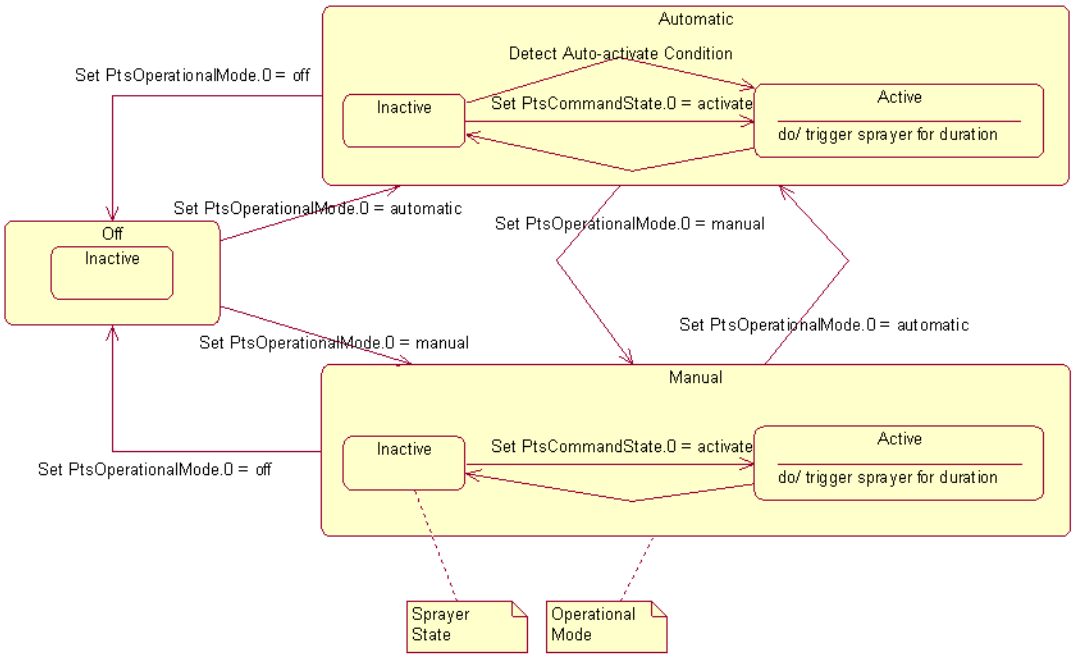

Figure 9 Pavement Treatment System State Machine Diagram

4.3.1.1 Off

When in the "off" state, the PTS shall not trigger the sprayer even if commanded to do so and shall always be inactive. The PTS shall transition to the requested operational mode, upon request.

4.3.1.2 Automatic

When in the "automatic" state, the PTS shall monitor conditions and trigger the sprayer based on a manufacturer specific algorithm. The algorithm shall only consider input from the detectors selected in the ptsMonitoringDetectors object. The PTS shall also trigger the sprayer if commanded to do so via the ptsCommandStateV3 object. The PTS shall transition to the requested operational mode, upon request.

4.3.1.3 Manual

When in the "manual" state, the PTS shall trigger the sprayer if commanded to do so via the ptsCommandStateV3 object. The PTS shall transition to the requested operational mode, upon request.

4.3.1.4 Inactive

When in the "inactive" state, the PTS shall not be spraying.

4.3.1.5 Active

Upon entering the "active" state, the PTS shall trigger the sprayer and spray the chemical for a duration as defined by the ptsSignalDuration object. Upon expiration of this duration, the PTS shall automatically transition back to the "inactive" state.

Do Not Copy Without Written Permission © 2022 AASHTO / ITE / NEMA

4.4 Class Diagrams

The relationships between data elements are described through the use of UML class diagrams. Figure 10 provides a sample class diagram.

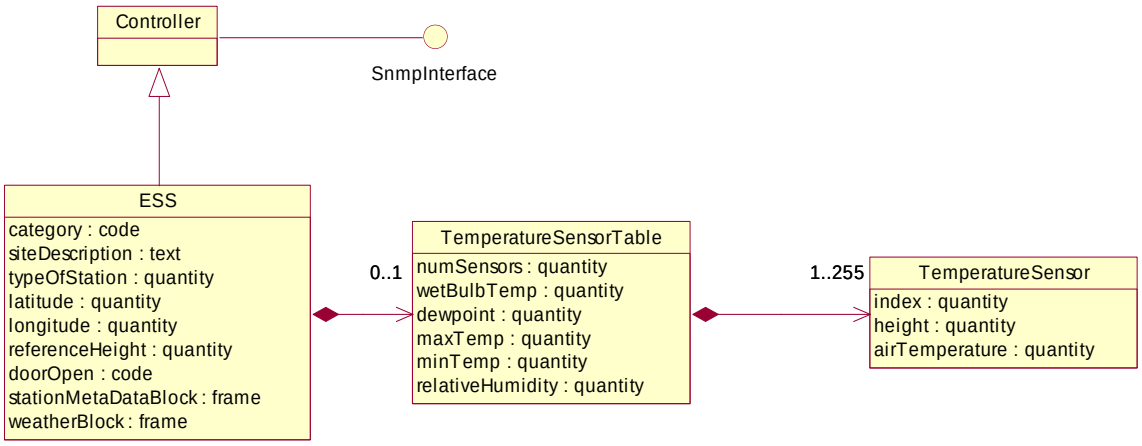

Figure 10 Sample Class Diagram for Temperature Sensors

Each box represents a logical class (grouping) of data. The box contains a name in the upper compartment and a list of any applicable attributes (i.e., individual pieces of information to describe the class) in the lower compartment. Lines between classes indicate that the classes have a relationship.

A diamond on the end of a line indicates aggregation. The class that has the diamond is the whole; the other class represents a part. If the diamond is filled in, it indicates composition, meaning that the part may only be owned by one whole and when the whole is deleted, all of its parts are automatically deleted. However, a part of an aggregate relationship that is not a composition can exist without the whole or may be part to several wholes. At a university, for example, a course would be considered to be an aggregation of students. A student may be enrolled in several courses at once and the student is not “deleted” if the course is cancelled.

A number at the end of a relationship line indicates the number of instances of the class that may exist in relation to one instance of the other class. An asterisk (*) indicates an infinite number. A range of values may be indicated in the format of a number followed by two periods followed by another number.

An open arrow indicates that the class from which the arrow originates is a type of the class to which the arrow points (i.e., an ESS is a type of controller).

A circle connected by a line indicates an interface for the class. An interface is one or more operations that may be performed. Within the context of NTCIP 1204 v04, there are two interfaces, the SNMP Interface (as shown in the sample diagram), and the FTP Interface (not shown here, but shown later in Section 4).

After the diagram, there is text describing the important rules depicted in the diagram

Each piece of data referenced is depicted in a class diagram and named according to ISO 14817 naming conventions. However, these naming conventions violate the rules for SNMP object names, as defined by RFC 1212. Thus, each class diagram is associated with a table that maps the descriptive names to the SNMP object names and the section number of the MIB where the data is defined.

© 2022 AASHTO / ITE / NEMA Do Not Copy Without Written Permission

4.4.1 ESS Characteristics

4.4.1.1 ESS Characteristics Class Diagram

An ESS can be described by a number of attributes as defined in the following sections and as depicted in the UML class diagram provided in Figure 11. The diagram indicates that an ESS is a type of a Controller. The data that may be supported by a Controller is defined by NTCIP 1201 v03. The Controller, and thus the ESS, shall support an SNMP Interface as defined in Annex G. A MobilePlatform is a special type of ESS that is able to collect information while in motion. While MobilePlatforms are relatively new to the industry, this standard provides a basic level of support for monitoring such devices.

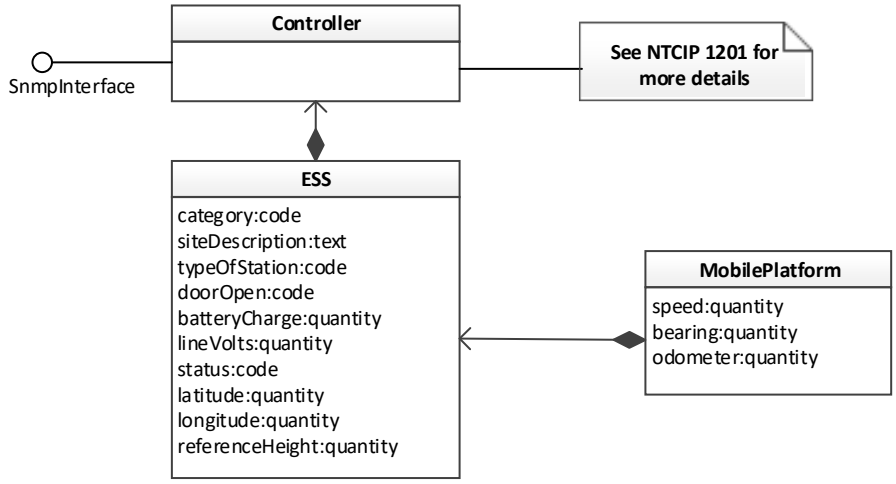

Figure 11 ESS Characteristics Class Diagram

4.4.1.2 ESS

An ESS is any type of device that is able to detect one or more environmental conditions and/or provide for pavement treatment. It can be described through a number of attributes as indicated Table 7.

Table 7 ESS Descriptive Name, Section, and Object Name

Descriptive Name	Section	Object Name
ESS.category:code	5.2.1	essNtcipCategory
ESS.siteDescription:text	5.2.2	essNtcipSiteDescription
ESS.typeOfStation:code	5.3.1	essTypeofStation
ESS.doorOpen:code	5.3.2	essDoorStatus
ESS.batteryCharge:quantity	5.3.3	essBatteryStatus
ESS.lineVolts:quantity	5.3.4	essLineVolts
ESS.status:code	5.3.10	essStatus
ESS.latitude:quantity	5.4.1	essLatitude
ESS.longitude:quantity	5.4.2	essLongitude
ESS.referenceHeight:quantity	5.5.1	essReferenceHeight

4.4.1.3 Mobile Platform

A mobile platform is a type of ESS that is able to operate while in motion. It can be described through a number of attributes as indicated in Table 8.

 © 2022 AASHTO / ITE / NEMA

Table 8 Mobile Platform Attributes

Descriptive Name	Section	Object Name
MobilePlatform.speed:quantity	5.4.3	essVehicleSpeed
MobilePlatform.bearing:quantity	5.4.4	essVehicleBearing
MobilePlatform.odometer:quantity	5.4.5	essOdometer

4.4.2 Pressure Sensor

4.4.2.1 Pressure Sensor Class Diagram

The ESS shall support one logical atmospheric pressure sensor if required by the agency specification. This information is depicted in Figure 12.

Note: The logical sensor may represent a value derived from multiple physical sensors.

Figure 12 Pressure Sensor Class Diagram

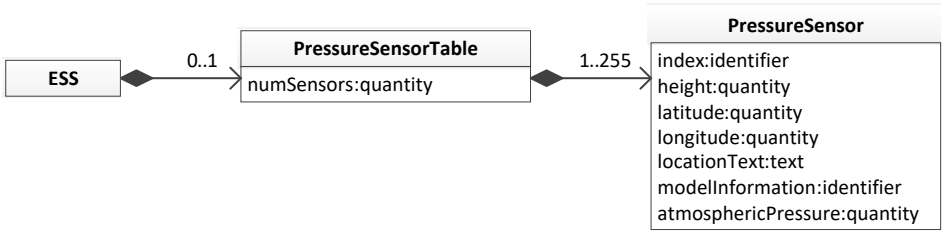

4.4.2.2 Pressure Sensor Table

The pressure sensor table contains information about all of the pressure sensors supported by the ESS. It can be described through a number of attributes as indicated in Table 9.

Table 9 Pressure Sensor Table

Descriptive Name	Section	Object Name
PressureSensorTable.numSensors:quantity	5.5.5	numEssPressureSensors

4.4.2.3 Pressure Sensor

A pressure sensor is a sensor that detects the atmospheric pressure. It can be described through a number of attributes as indicated in Table 10.

Table 10 Pressure Sensor Attributes

Descriptive Name	Section	Object Name
PressureSensor.index:identifier	5.5.7.1	essPressureSensorIndex
PressureSensor.height:quantity	5.5.7.2	essPressureSensorHeight
PressureSensor.latitude:quantity	5.5.7.3	essPressureSensorLatitude
PressureSensor.longitude:quantity	5.5.7.4	essPressureSensorLongitude
PressureSensor.location:text	5.5.7.5	essPressureSensorLocation
PressureSensor.modelInformation:identifier	5.5.7.6	essPressureSensorModelInformation
PressureSensor.atmosphericPressure:quantity	5.5.7.7	essPressureSensorAtmosphericPressure

© 2022 AASHTO / ITE / NEMA Do Not Copy Without Written Permission

4.4.3 Wind Data

4.4.3.1 Wind Data Class Diagram

The ESS shall support one wind sensor table if required by the agency specification. The wind sensor table shall be associated with the number of wind sensors as defined in the agency specification.The information supported by the wind sensor is depicted in Figure 13.

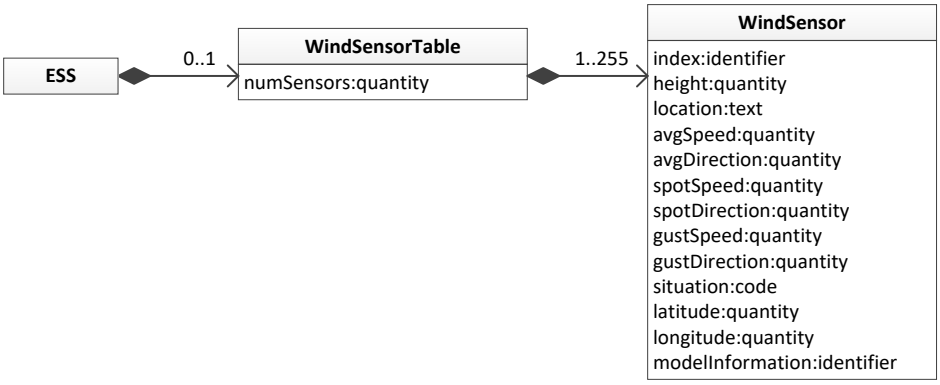

Figure 13 Wind Sensor Class Diagram

4.4.3.2 Wind Sensor Table

The wind sensor table contains information about all of the wind sensors supported by the ESS. It can be described through a number of attributes as indicated in Table 11.

Table 11 Wind Sensor Table

Descriptive Name	Section	Object Name
WindSensorTable.numSensors:quantity	5.6.8	windSensorTableNumSensors

4.4.3.3 Wind Sensor

A wind sensor is a sensor that reports the wind speed and direction. It can be described through a number of attributes as indicated in Table 12.

Table 12 Wind Sensor Attributes

Descriptive Name	Section	Object Name
WindSensor.index:identifier	5.6.10.1	windSensorIndex
WindSensor.height:quantity	5.6.10.2	windSensorHeight
WindSensor.location:text	5.6.10.3	windSensorLocation
WindSensor.avgSpeed:quantity	5.6.10.4	windSensorAvgSpeed
WindSensor.avgDirection:quantity	5.6.10.5	windSensorAvgDirection
WindSensor.spotSpeed:quantity	5.6.10.6	windSensorSpotSpeed
WindSensor.spotDirection:quantity	5.6.10.7	windSensorSpotDirection
WindSensor.gustSpeed:quantity	5.6.10.8	windSensorGustSpeed
WindSensor.gustDirection:quantity	5.6.10.9	windSensorGustDirection
WindSensor.situation:code	5.6.10.10	windSensorSituation
WindSensor.latitude:quantity	5.6.10.11	windSensorLatitude
WindSensor.longitude:quantity	5.6.10.12	windSensorLongitude
WindSensor.modelInformation:identifier	5.6.10.13	windSensorModelInformation

Do Not Copy Without Written Permission © 2022 AASHTO / ITE / NEMA

4.4.4 Temperature

4.4.4.1 Temperature Class Diagram

The ESS shall support one temperature sensor table if required by the agency specification. The temperature sensor table shall be associated with the number of temperature sensors as defined in the agency specification. The information supported by the temperature sensor is depicted in Figure 14.

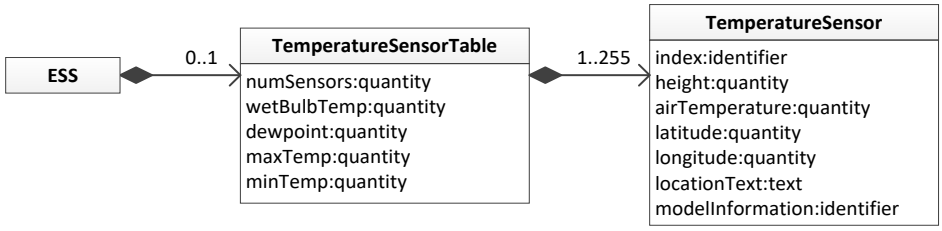

Figure 14 Temperature Sensor Class Diagram

4.4.4.2 Temperature Sensor Table

The temperature sensor table contains summary information about all of the temperature sensors supported by the ESS. It can be described through a number of attributes as indicated in Table 13.

Table 13 Temperature Sensor Table Attributes

Descriptive Name	Section	Object Name
TemperatureSensorTable.numSensors:quantity	5.7.1	essNumTemperatureSensors
TemperatureSensorTable.wetBulbTemp:quantity	5.7.4	essWetbulbTemp
TemperatureSensorTable.dewpoint:quantity	5.7.5	essDewpointTemp
TemperatureSensorTable.maxTemp:quantity	5.7.6	essMaxTemp
TemperatureSensorTable.minTemp:quantity	5.7.7	essMinTemp

4.4.4.3 Temperature Sensor

A temperature sensor is a sensor that reports the current air temperature at a defined height. It can be described through a number of attributes as indicated in Table 14.

Table 14 Temperature Sensor Attributes

Descriptive Name	Section	Object Name
TemperatureSensor.index:identifier	5.7.3.1	essTemperatureSensorIndex
TemperatureSensor.height:quantity	5.7.3.2	essTemperatureSensorHeight
TemperatureSensor.airTemperature:quantity	5.7.3.3	essAirTemperature
TemperatureSensor.latitude:quantity	5.7.3.4	essTemperatureSensorLatitude
TemperatureSensor.longitude:quantity	5.7.3.5	essTemperatureSensorLongitude
TemperatureSensor.location:text	5.7.3.6	essTemperatureSensorLocation
TemperatureSensor.modelInformation:identifier	5.7.3.7	essTemperatureSensorModelInformation

4.4.5 Precipitation

4.4.5.1 Precipitation Class Diagram

ESS shall support one precipitation sensor table if required by the agency specification. The precipitation sensor table shall be associated with the number of precipitation sensors as defined in the agency specification. The information supported by these sensors are depicted in Figure 15.

© 2022 AASHTO / ITE / NEMA Do Not Copy Without Written Permission

Note: The logical sensor may represent a value derived from multiple physical sensors.

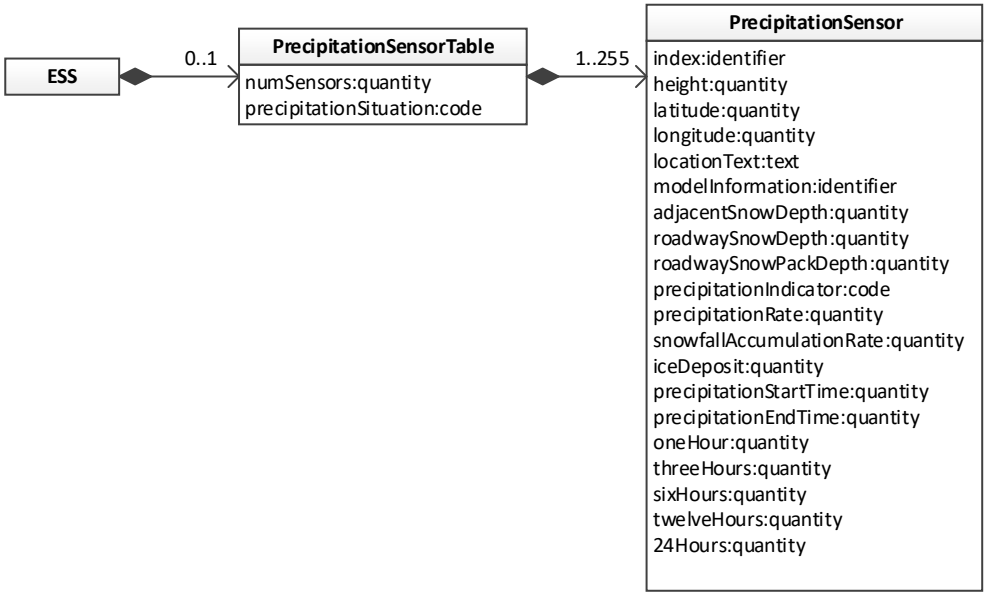

Figure 15 Precipitation Sensor Class Diagram

4.4.5.2 Precipitation Sensor Table

The precipitation sensor table contains information about all of the precipitation sensors supported by the ESS. It can be described through a number of attributes as indicated in Table 15.

Table 15 Precipitation Sensor Table Attributes

Descriptive Name	Section	Object Name
PrecipitationSensorTable.numSensors:quantity	5.8.22	precipitationSensorTableNumSensors
PrecipitationSensor.precipitationSituation:code	5.8.9	essPrecipSituation

4.4.5.3 Precipitation Sensor

A precipitation sensor is a sensor that reports information about precipitation. It can be described through a number of attributes as indicated in Table 16.

Table 16 Precipitation Sensor Attributes

Descriptive Name	Section	Object Name
PrecipitationSensor.index:identifier	5.8.24.1	precipitationSensorIndex
PrecipitationSensor.height:quantity	5.8.24.2	precipitationSensorHeight
PrecipitationSensor.latitude:quantity	5.8.24.3	precipitationSensorLatitude
PrecipitationSensor.longitude:quantity	5.8.24.4	precipitationSensorLongitude
PrecipitationSensor.location:text	5.8.24.5	precipitationSensorLocation
PrecipitationSensor.modelInformation:identifier	5.8.24.6	precipitationSensorModelInformationV4
PrecipitationSensor.totalPrecipitationPeriod:quantity	5.8.24.7	precipitationSensorPeriod
PrecipitationSensor.adjacentSnowDepth:quantity	5.8.24.8	precipitationSensorAdjacentSnowDepth
PrecipitationSensor.roadwaySnowDepth:quantity	5.8.24.9	precipitationSensorRoadwaySnowDepth

 © 2022 AASHTO / ITE / NEMA

Descriptive Name	Section	Object Name
PrecipitationSensor.roadwaySnowPackDepth:quantity	5.8.24.10	precipitationSensorRoadwaySnowPackDepth
PrecipitationSensor.precipitationIndicator:code	5.8.24.11	precipitationSensorPrecipYesNo
PrecipitationSensor.precipitationRate:quantity	5.8.24.12	precipitationSensorPrecipRate
PrecipitationSensor.snowfallAccumulationRate:quantity	5.8.24.13	precipitationSensorSnowfallAccumRate
PrecipitationSensor.precipitationSituation:code	5.8.24.14	precipitationSensorPrecipSituation
PrecipitationSensor.iceDeposit:quantity	5.8.24.15	precipitationSensorIceThickness
PrecipitationSensor.precipitationStartTime:quantity	5.8.24.16	precipitationSensorPrecipitationStartTime
PrecipitationSensor.precipitationEndTime:quantity	5.8.24.17	precipitationSensorPrecipitationEndTime
PrecipitationSensor.oneHour:quantity	5.8.24.18	precipitationSensorPrecipitationOneHour
PrecipitationSensor.threeHours:quantity	5.8.24.19	precipitationSensorPrecipitationThreeHours
PrecipitationSensor.sixHours:quantity	5.8.24.20	precipitationSensorPrecipitationSixHours
PrecipitationSensor.twelveHours:quantity	5.8.24.21	precipitationSensorPrecipitationTwelveHours
PrecipitationSensor.24Hours:quantity	5.8.24.22	precipitationSensorPrecipitation24Hours
PrecipitationSensor.UserDefined:quantity	5.8.24.23	precipitationSensorPrecipitationUserDefined

4.4.5.4 Water Level Class Diagram

The ESS shall support one water level sensor table if required by the agency specification. The water level sensor table shall be associated with the number of water level sensors as defined in the agency specification. The information supported by these sensors are depicted in Figure 16 .

Note: The logical sensor may represent a value derived from multiple physical sensors.

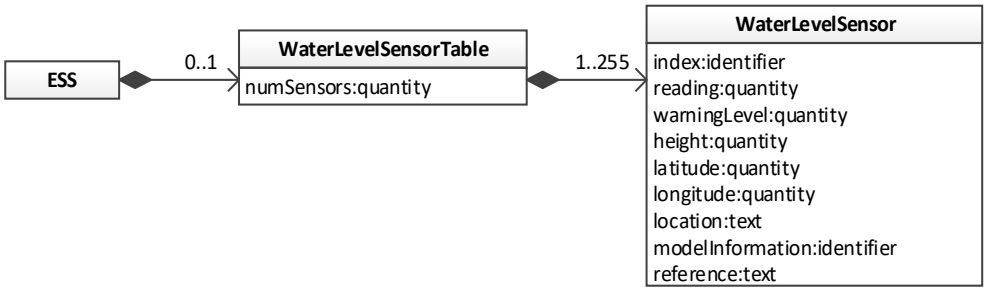

Figure 16 Water Level Sensor Class Diagram

4.4.5.5 Water Level Sensor Table

The water level sensor table contains information about all of the water level sensors supported by the ESS. It can be described through a number of attributes as indicated in Table 17.

Table 17 Water Level Sensor Table Attributes

Descriptive Name	Section	Object Name
WaterLevelSensorTable.numSensors:quantity	5.8.19	waterLevelSensorTableNumSensors

© 2022 AASHTO / ITE / NEMA Do Not Copy Without Written Permission

4.4.5.6 Water Level Sensor

A water level sensor is a sensor that reports the current level of water as measured from a defined point. It can be described through a number of attributes as indicated in Table 18.

Table 18 Water Level Sensor Attributes

Descriptive Name	Section	Object Name
WaterLevelSensor.index:identifier	5.8.21.1	waterLevelSensorIndex
WaterLevelSensor.reading:quantity	5.8.21.2	waterLevelSensorReading
WaterLevelSensor.warningLevel:quantity	5.8.21.3	waterLevelSensorWarningLevel
WaterLevelSensor.height:quantity	5.8.21.4	waterLevelSensorHeight
WaterLevelSensor.latitude:quantity	5.8.21.5	waterLevelSensorLatitude
WaterLevelSensor.longitude:quantity	5.8.21.6	waterLevelSensorLongitude
WaterLevelSensor.location:text	5.8.21.7	waterLevelSensorLocation
WaterLevelSensor.modelInformation:identifier	5.8.21.8	waterLevelSensorModelInformation
WaterLevelSensor.reference:text	5.8.21.9	waterLevelSensorReferencePoint

4.4.5.7 Humidity Class Diagram

The ESS shall support one humidity sensor table if required by the agency specification. The humidity sensor table shall be associated with the number of water level sensors as defined in the agency specification. The information supported by these sensors is depicted in Figure 17.

Note: The logical sensor may represent a value derived from multiple physical sensors.

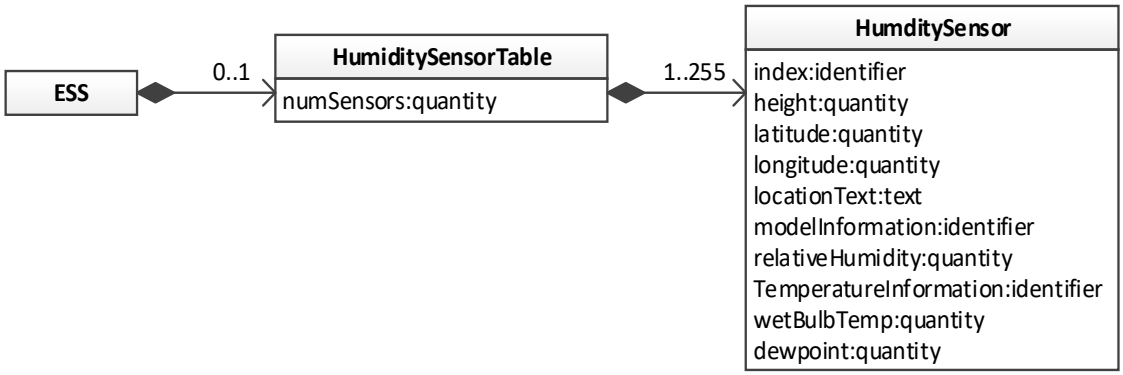

Figure 17 Humidity Sensor Class Diagram

4.4.5.8 Humidity Sensor Table

The humidity sensor table contains information about all of the humidity sensors supported by the ESS. It can be described through a number of attributes as indicated in Table 19.

Table 19 Humidity Sensor Table Attributes

Descriptive Name	Section	Object Name
HumiditySensorTable.numSensors:quantity	5.8.25	humiditySensorTableNumSensors

 © 2022 AASHTO / ITE / NEMA

4.4.5.9 Humidity Sensor

A humidity sensor is a sensor that reports the current relative humidity as measured from a defined point. It can be described through a number of attributes as indicated in Table 20.

Table 20 Humidity Sensor Attributes

Descriptive Name	Section	Object Name
HumiditySensor.index:identifier	5.8.27.1	humiditySensorIndex
HumiditySensor.height:quantity	5.8.27.2	humiditySensorHeight
HumiditySensor.latitude:quantity	5.8.27.3	humiditySensorLatitude
HumiditySensor.longitude:quantity	5.8.27.4	humiditySensorLongitude
HumiditySensor.location:text	5.8.27.5	humiditySensorLocation
HumiditySensor.modelInformation:identifier	5.8.27.6	humiditySensorModelInformation
HumiditySensor.relativeHumidity:quantity	5.8.27.7	humiditySensorRelativeHumidity
HumiditySensor.TemperatureInformation:identifier	5.8.27.8	humiditySensorTemperatureInformation
HumiditySensor.wetBulbTemp:quantity	5.8.27.9	humiditySensorWetbulbTemp
HumiditySensor.dewpoint:quantity	5.8.27.10	humiditySensorDewpointTemp

4.4.6 Radiation

4.4.6.1 Radiation Class Diagram

The ESS shall support one radiation sensor table if required by the agency specification. The radiation sensor table shall be associated with the number of radiation sensors as defined in the agency specification. The information supported by the radiation sensor is depicted in Figure 18.

Note: The logical sensor may represent a value derived from multiple physical sensors.

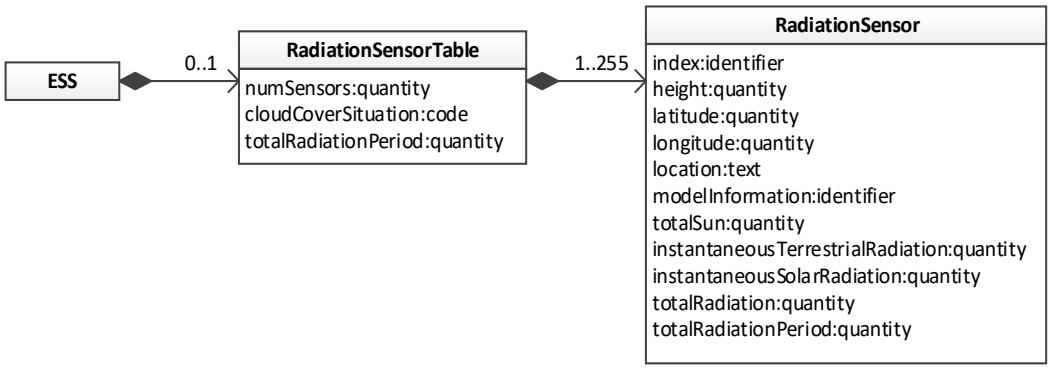

Figure 18 Radiation Sensor Class Diagram

4.4.6.2 Radiation Sensor Table

The radiation table contains information about all of the radiation sensors supported by the ESS. It can be described through a number of attributes as indicated in Table 21.

© 2022 AASHTO / ITE / NEMA Do Not Copy Without Written Permission

Table 21 Radiation Sensor Table

Descriptive Name	Section	Object Name
RadiationSensorTable.numSensors:quantity	5.9.8	radiationSensorTableNumSensors
RadiationSensorTable.cloudCoverSituation:code	5.9.11	essCloudSituationV4
RadiationSensorTable.totalRadiation:quantity	5.9.10.10	essTotalRadiationV4

4.4.6.3 Radiation Objects

A radiation sensor is a sensor that reports the amount of solar and terrestrial radiation to which the sensor is exposed. It can be described through a number of attributes as indicated Table 22.

Table 22 Radiation Sensor Attributes

Descriptive Name	Section	Object Name
RadiationSensor.index:identifier	5.9.10.1	radiationSensorIndex
RadiationSensor.height:quantity	5.9.10.2	radiationSensorHeight
RadiationSensor.latitude:quantity	5.9.10.3	radiationSensorLatitude
RadiationSensor.longitude:quantity	5.9.10.4	radiationSensorLongitude
RadiationSensor.location:text	5.9.10.5	radiationSensorLocation
RadiationSensor.modelInformation:identifier	5.9.10.6	radiationSensorModelInformation
RadiationSensor.totalSun:quantity	5.9.10.7	essTotalSunV4
RadiationSensor.instantaneousTerrestrialRadiation:quantity	5.9.10.8	essInstantaneousTerrestrialRadiationV4
RadiationSensor.instantaneousSolarRadiation:quantity	5.9.10.9	essInstantaneousSolarRadiationV4
RadiationSensor.totalRadiationPeriod:quantity	5.9.7	essTotalRadiationPeriod

4.4.7 Visibility

4.4.7.1 Visibility Class Diagram

The ESS shall support one visibility sensor table if required by the agency specification. The visibility sensor table shall be associated with the number of visibility sensors as defined in the agency specification. The information supported by the visibility sensor is depicted in Figure 19.

Note: The logical sensor may represent a value derived from multiple physical sensors.

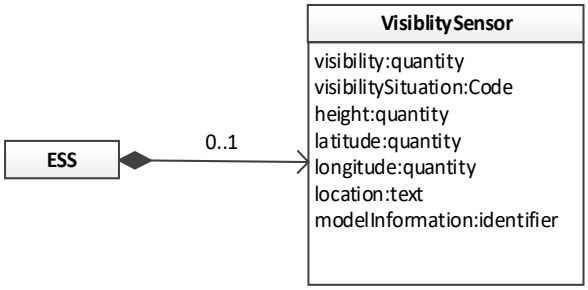

Figure 19 Visibility Sensor Class Diagram

4.4.7.2 Visibility Sensor

A visibility sensor is a sensor that reports the distance at which things are visible. It can be described through a number of attributes as indicated in Table 23.

 © 2022 AASHTO / ITE / NEMA

Table 23 Visibility Sensor Attributes

Descriptive Name	Section	Object Name
VisibilitySensor.visibility:quantity	5.10.1	essVisibility
VisibilitySensor.visibilitySituation:code	5.10.2	essVisibilitySituation
VisibilitySensor.height:quantity	5.10.3	visibilitySensorHeight
VisibilitySensor.latitude:quantity	5.10.4	visibilitySensorLatitude
VisibilitySensor.longitude:quantity	5.10.5	visibilitySensorLongitude
VisibilitySensor.location:text	5.10.6	visibilitySensorLocation
VisibilitySensor.modelInformation:identifier	5.10.7	visibilitySensorModelInformation

4.4.8 Pavement Sensor Data

4.4.8.1 Pavement Sensor Data Class Diagram

The ESS shall support one pavement sensor table if required by the agency specification. The pavement sensor table shall be associated with the number of pavement sensors as defined in the agency specification. The information supported by these sensors is depicted in Figure 20.

If the ESS uses a passive pavement sensor to predict the temperature at which ice forms, the ESS shall also support the pavement treatment table. The pavement treatment table shall be associated with the number of pavement treatments as defined in the agency specification. See Section 4.4.12.

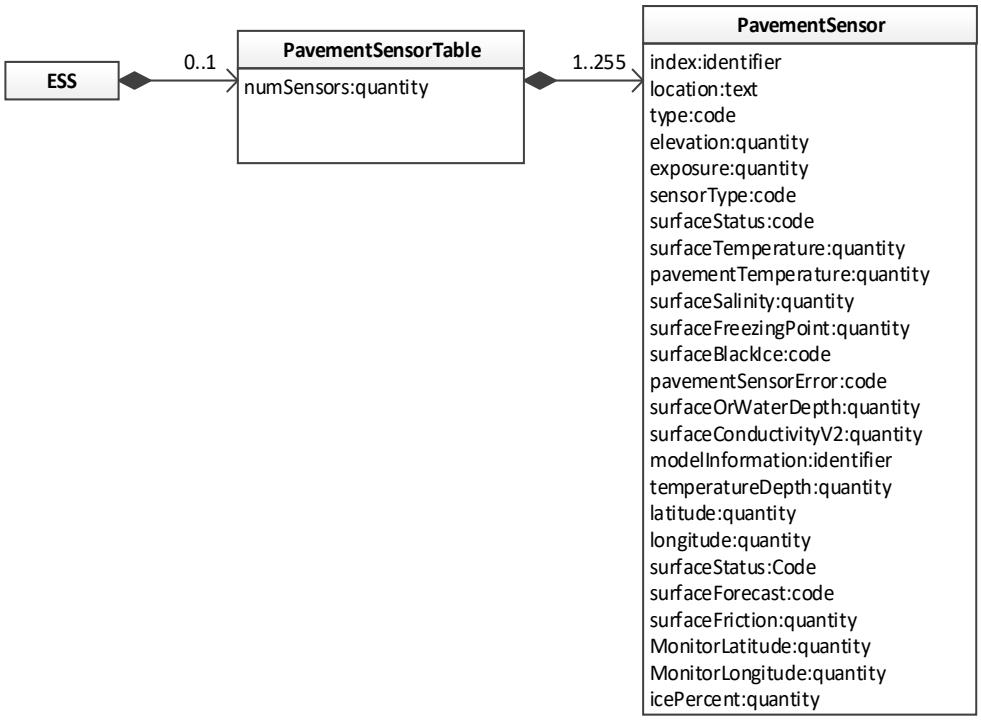

Figure 20 Pavement Sensor Class Diagram

4.4.8.2 Pavement Sensor Table

The pavement sensor table provides information related to the various pavement senosrs supported by the ESS. It can be described through a number of attributes as indicated in Table 24.

© 2022 AASHTO / ITE / NEMA Do Not Copy Without Written Permission

Table 24 Pavement Sensor Table Attributes

Descriptive Name	Section	Object Name
PavementSensorTable.numSensors:quantity	5.11.1	numEssPavementSensors

4.4.8.3 Pavement Sensor Data

A pavement sensor provides information related to the state of the pavement. It can be described through a number of attributes as indicated in Table 25.

Table 25 Pavement Sensor Attributes

Descriptive Name	Section	Object Name
PavementSensor.index:identifier	5.11.3.1	essPavementSensorIndex
PavementSensor.location:text	5.11.3.2	essPavementSensorLocation
PavementSensor.type:code	5.11.3.3	essPavementType
PavementSensor.elevation:quantity	5.11.3.4	essPavementElevation
PavementSensor.exposure:quantity	5.11.3.5	essPavementExposure
PavementSensor.sensorType:code	5.11.3.6	essPavementSensorType
PavementSensor.surfaceStatus:code	5.11.3.7	essSurfaceStatus
PavementSensor.surfaceTemperature:quantity	5.11.3.8	essSurfaceTemperature
PavementSensor.pavementTemperature:quantity	5.11.3.9	essPavementTemperature
PavementSensor.surfaceSalinity:quantity	5.11.3.11	essSurfaceSalinity
PavementSensor.surfaceFreezingPoint:quantity	5.11.3.13	essSurfaceFreezePoint
PavementSensor.surfaceBlackIce:code	5.11.3.14	essSurfaceBlackIceSignal
PavementSensor.pavementSensorError:code	5.11.3.15	essPavementSensorError
PavementSensor.surfaceOrWaterDepth:quantity	5.11.3.16	essSurfaceIceOrWaterDepth
PavementSensor.surfaceConductivityV2:quantity	5.11.3.17	essSurfaceConductivityV2
PavementSensor.modelInformation:identifier	5.11.3.18	pavementSensorModelInformation
PavementSensor.temperatureDepth:quantity	5.11.3.19	pavementSensorTemperature Depth
PavementSensor.latitude:quantity	5.11.3.20	pavementSensorLatitude
PavementSensor.longitude:quantity	5.11.3.21	pavementSensorLongitude
PavementSensor.surfaceStatus:code	5.11.3.22	pavementSensorSurfaceCondition
PavementSensor.surfaceForecast:code	5.11.3.23	pavementSensorForecastCondition
PavementSensor.surfaceFriction:quantity	5.11.3.24	pavementSensorFrictionCoefficient
PavementSensorMonitor.latitude:quantity	5.11.3.25	pavementMonitorLatitude
PavementSensorMonitor.longitude:quantity	5.11.3.26	pavementMonitorLongitude
PavementSensor.icePercent:quantity	5.11.3.27	pavementIcePercentage

4.4.9 Subsurface Data

4.4.9.1 Subsurface Data Class Diagram

The ESS shall support one subsurface sensor table if required by the agency specification. The subsurface sensor table shall be associated with the number of subsurface sensors as defined in the agency specification. The information supported by these sensors are depicted in Figure 21.

 © 2022 AASHTO / ITE / NEMA

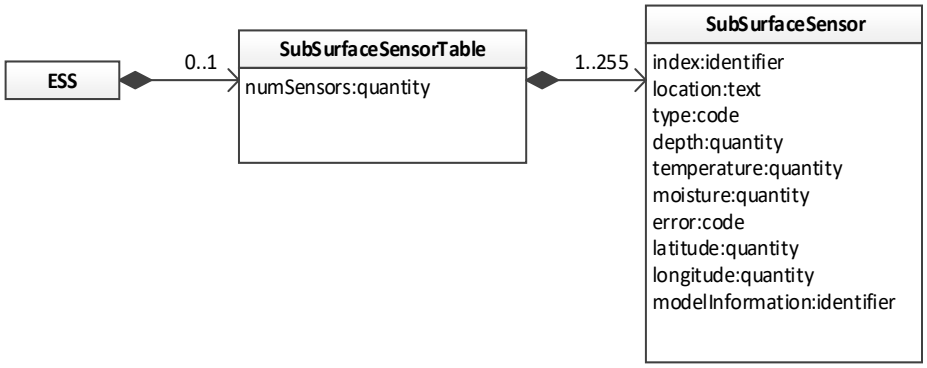

Figure 21 Subsurface Sensor Class Diagram

4.4.9.2 Subsurface Sensor Table

The subsurface sensor table provides summary information related to the subsurface sensors supported by the ESS. It can be described through a number of attributes as indicated in Table 26.

Table 26 Subsurface Sensor Table Attributes

Descriptive Name	Section	Object Name
SubSurfaceSensorTable.numSensors:quantity	5.11.4	numEssSubSurfaceSensors

4.4.9.3 Subsurface Sensor

A subsurface sensor provides information related to the state of the pavement subsurface. It can be described through a number of attributes as indicated in Table 27

Table 27 Subsurface Sensor Attributes

Descriptive Name	Section	Object Name
SubSurfaceSensor.index:identifier	5.11.6.1	essSubSurfaceSensorIndex
SubSurfaceSensor.location:text	5.11.6.2	essSubSurfaceSensorLocation
SubSurfaceSensor.type:code	5.11.6.3	essSubSurfaceType
SubSurfaceSensor.depth:quantity	5.11.6.4	essSubSurfaceSensorDepth
SubSurfaceSensor.temperature:quantity	5.11.6.5	essSubSurfaceTemperature
SubSurfaceSensor.moisture:quantity	5.11.6.6	essSubSurfaceMoisture
SubSurfaceSensor.error:code	5.11.6.7	essSubSurfaceSensorError
SubSurfaceSensor.latitude:quantity	5.11.6.8	essSubSurfaceSensorLatitude
SubSurfaceSensor.longitude:quantity	5.11.6.9	essSubSurfaceSensorLongitude
SubSurfaceSensor.modelInformation:identifier	5.11.6.10	essSubSurfaceModelInformation

4.4.10 Air Quality Data

4.4.10.1 Air Quality Data Class Diagram

The ESS shall support one air quality sensor table if required by the agency specification. The air quality sensor table shall be associated with the number of air quality sensors as defined in the agency specification. The information supported by this sensor is depicted in Figure 22.

© 2022 AASHTO / ITE / NEMA Do Not Copy Without Written Permission

Note: The logical sensor may represent a value derived from multiple physical sensors.

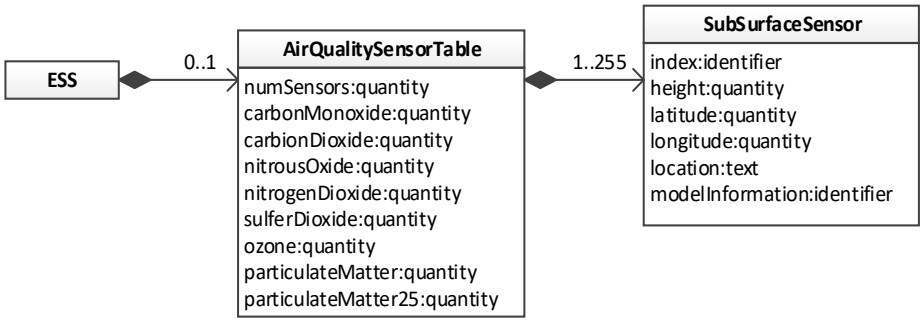

Figure 22 Air Quality Sensor Class Diagram

4.4.10.2 Air Quality Sensor Table

The air quality sensor table provides information related to the various air quality sensors supported by the ESS. It can be described through a number of attributes as indicated in Table 28.

Table 28 Air Quality Sensor Table Attributes

Descriptive Name	Section	Object Name
AirQualitySensorTable.numSensors:quantity	5.14.10	numAirQualitySensors
AirQualitySensor.carbonMonoxide:quantity	5.14.1	essCO
AirQualitySensor.carbonDioxide:quantity	5.14.2	essCO2
AirQualitySensor.nitricOxide:quantity	5.14.3	essNO
AirQualitySensor.nitrogenDioxide:quantity	5.14.4	essNO2
AirQualitySensor.sulfurDioxide:quantity	5.14.5	essSO2
AirQualitySensor.ozone:quantity	5.14.6	essO3
AirQualitySensor.particulateMatter:quantity	5.14.7	essPM10
AirQualitySensor.particulateMatter25:quantity	5.14.9	essPM25

4.4.10.3 Air Quality Sensor

An air quality sensor is a sensor that reports the concentration of various chemicals in the air. It can be described through a number of attributes as indicated in Table 29.

Table 29 Air Quality Sensor Attributes

Descriptive Name	Section	Object Name
AirQualitySensor.index:identifier	**5.14.12.1**	**essAirQualitySensorIndex**
AirQualitySensor.height:quantity	**5.14.12.2**	**essAirQualitySensorHeight**
AirQualitySensor.latitude:quantity	**5.14.12.3**	**essAirQualitySensorLatitude**
AirQualitySensor.longitude:quantity	**5.14.12.4**	**essAirQualitySensorLongitude**
AirQualitySensor.location:text	**5.14.12.5**	**essAirQualitySensorLocation**

 © 2022 AASHTO / ITE / NEMA

Descriptive Name	Section	Object Name
AirQualitySensor.modelInformation:identifier	5.14.12.6	essAirQualitySensorModelInformation

4.4.11 Snapshot Data

4.4.11.1 Snapshot Data Class Diagram

The ESS shall support one snapshot camera table if required by the agency specification. The snapshot camera table shall be associated with the number of snapshot cameras as defined in the agency specification. The information supported by these entities are depicted in Figure 23.

The ESS shall also support a dynamic number of snapshots managed through the FTP Interface.

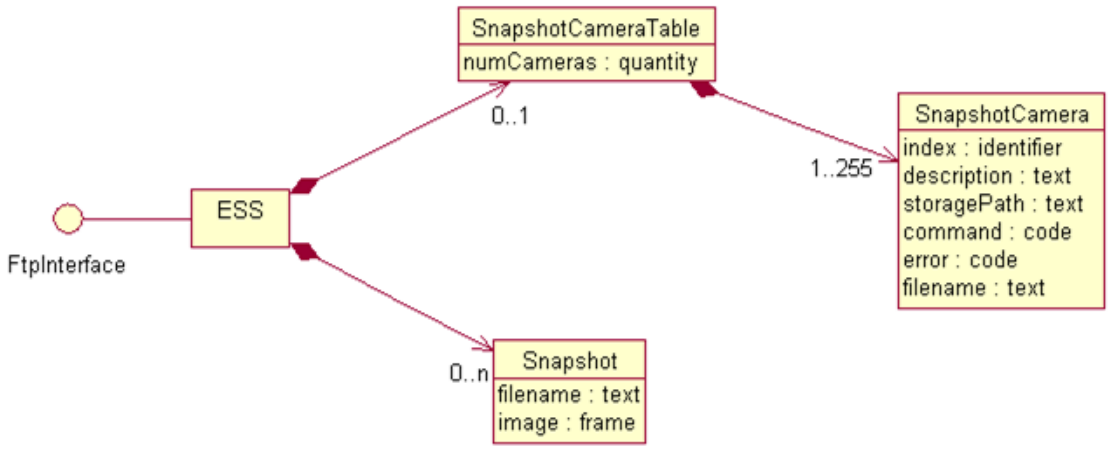

Figure 23 Snapshot Class Diagram

4.4.11.2 Snapshot Camera

A snapshot camera allows an ESS to capture and store a snapshot image. It can be described through a number of attributes as indicated in Table 30.

Table 30 Snapshot Camera Attributes

Descriptive Name	Section	Object Name
SnapshotCamera.index:identifier	5.16.3.1	essSnapshotCameraIndex
SnapshotCamera.description:text	5.16.3.2	essSnapshotCameraDescription
SnapshotCamera.storagePath:text	5.16.3.3	essSnapshotCameraStoragePath
SnapshotCamera.command:code	5.16.3.4	essSnapshotCameraCommand
SnapshotCamera.error:code	5.16.3.5	essSnapshotCameraError
SnapshotCamera.filename:text	5.16.3.6	essSnapshotCameraFilename

4.4.11.3 Snapshot

A snapshot is any image that has been captured by the snapshot camera. It can be described through a number of attributes as indicated in Table 31.

Table 31 Snapshot Attributes

Descriptive Name	Section	Object Name
Snapshot.filename:text	5.17.1	<not an SNMP object>

© 2022 AASHTO / ITE / NEMA Do Not Copy Without Written Permission

		See Annex F.5.1.
Snapshot.image:frame	5.17.2	<not an SNMP object> See Annex F.5.2.

4.4.11.4 Snapshot Camera Table

The snapshot camera table provides summary .2.1information related to the snapshot cameras supported by the ESS. It can be described through a number of attributes as indicated in Table 32.

Table 32 Snapshot Camera Table Attibutes

Descriptive Name	Section	Object Name
SnapshotCameraTable.numCameras:quantity	5.16.1	essSnapshotNumberOfCameras

4.4.12 Pavement Treatment System

4.4.12.1 Pavement Treatment System Class Diagram

The ESS shall support a pavement treatment system if required by the agency specification. The information supported by the PTS is depicted in Figure 24.

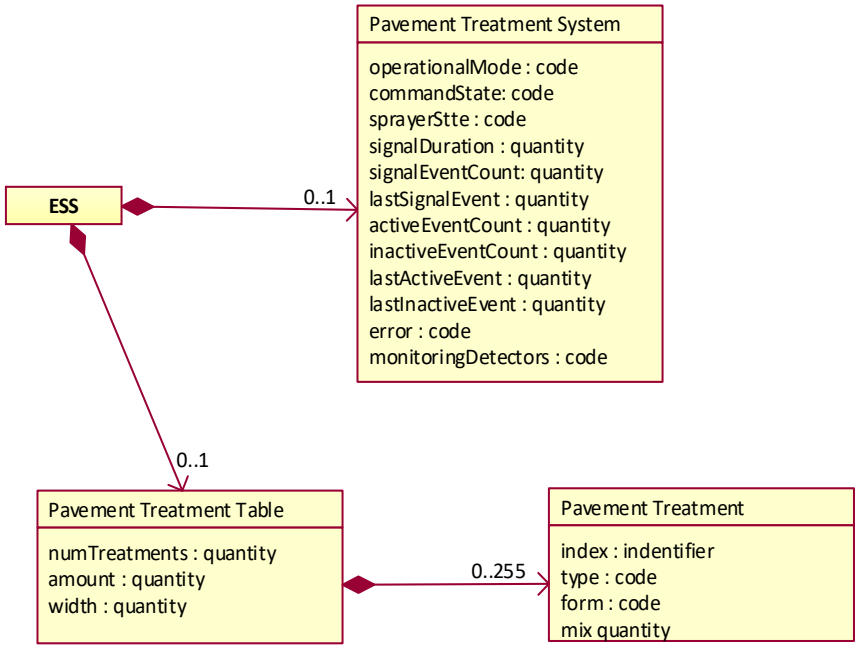

Figure 24 Pavement Treatment Class Diagram

4.4.12.2 Pavement Treatment System

A pavement treatment system is a system that controls the operation of a sprayer that disperses chemicals to prevent ice from forming on roadways. It can be described through a number of attributes as indicated in Table 33.

Table 33 Pavement Treatment System Attributes

© 2022 AASHTO / ITE / NEMA

Descriptive Name	Section	Object Name
PTS.operationalModeV3.code	5.13.19	ptsOperationalModeV3
PTS.commandStateV3:code	5.13.20	ptsCommandStateV3
PTS.sprayerState:code	5.13.9	ptsSprayerState
PTS.signalDuration:quantity	5.13.10	ptsSignalDuration
PTS.signalEventCount:quantity	5.13.11	ptsSignalEventCount
PTS.lastSignalEvent:quantity	5.13.12	ptsLastSignalEvent
PTS.activeEventCount:quantity	5.13.13	ptsActiveEventCount
PTS.inactiveEventCount:quantity	5.13.14	ptsInactiveEventCount
PTS.lastActiveEvent:quantity	5.13.15	ptsLastActiveEvent
PTS.lastInactiveEvent:quantity	5.13.16	ptsLastInactiveEvent
PTS.error:code	5.13.17	ptsError
PTS.monitoringDetectors:code	5.13.18	ptsMonitoringDetectors

4.4.12.3 Pavement Treatment Table

The pavement treatment table contains information about the various treatments that may be applied to the roadway surface. It can be described through a number of attributes as indicated in Table 34.

Table 34 Pavement Treatment Table Attributes

Descriptive Name	Section	Object Name
PavementTreatmentTable.numTreatments:quantity	5.13.1	numEssTreatments
PavementTreatmentTable.amount:quantity	5.13.4	essPaveTreatmentAmount
PavementTreatmentTable.width:quantity	5.13.5	essPaveTreatmentWidth

4.4.12.4 Pavement Treatment

A pavement treatment is a chemical that can be applied to a roadway surface to inhibit ice formation or promote ice melting. It can be described through a number of attributes as indicated in Table 35.

Table 35 Pavement Treatment Attributes

Descriptive Name	Section	Object Name
PavementTreatement.index:identifier	5.13.3.1	essPavementTreatmentIndex
PavementTreatement.type:code	5.13.3.2	essPaveTreatProductType
PavementTreatement.form:code	5.13.3.3	essPaveTreatProductForm
PavementTreatement.mix:quantity	5.13.3.4	essPercentProductMix

© 2022 AASHTO / ITE / NEMA Do Not Copy Without Written Permission

Section 5
Management Information Base (MIB) [Normative]

Section 5 defines those objects that are specifically used by Environmental Sensor Stations (ESS). The objects are defined using the OBJECT-TYPE macro as specified in RFC 1212 and NTCIP 8004 v02. The text provided from Section 5 through the end of Section 5.17.2 (except the section headings) constitutes the standard NTCIP1204 v04 MIB.

All of the objects defined in this NTCIP 1204 v04 reside under the “ess” node of the global naming tree. To aid in object management, the “ess” node has been subdivided into logical categories, each defined by a node under the “ess” node. The individual objects are then located under the appropriate node.

Conformance requirements for any object is determined by the use of the Requirements Traceability Matrix (RTM) in Annex A. To support any defined Requirement, an implementation shall support all objects to which the Requirement traces in the RTM. The value of the STATUS field for every object in the MIB is "mandatory," and indicates that it is mandatory if any associated Requirement is selected.

For all bitmapped objects, if a bit is zero (0), then the referenced function is disabled or not supported, and if a bit is one (1), then the referenced function is enabled or supported.

A computer readable format of this information, called a Management Information Base, is available from NEMA (ntcip@nema.org). The MIB has been verified using SMICng Version 2.2.07 (Book).

Previous versions of NTCIP 1204 v04 defined data elements that have been replaced to resolve ambiguities; however, central systems may need to interoperate with older equipment and support such data elements. Annex D documents the reason that the ESS WG decided to deprecate various objects.

5.1 MIB Header

```
--*****************************************************************
-- Filename:    1204v0426a.MIB
-- Description: This MIB defines the Environmental Sensor Station
--              Objects
--*****************************************************************

NTCIP1204-v04 DEFINITIONS ::= BEGIN
IMPORTS
  Counter
      FROM RFC1155-SMI
  DisplayString
      FROM RFC1213-MIB
  OBJECT-TYPE
      FROM RFC-1212
  ess, OerString
      FROM NTCIP8004v02;

-- For the purpose of this section, the following OBJECT IDENTIFIERS
-- are used:

essBufr OBJECT IDENTIFIER ::= {ess 1}
-- This node contains objects that describe BUFR information based on
-- the BUFR Standards.
```

 © 2022 AASHTO / ITE / NEMA

```
essNtcip OBJECT IDENTIFIER ::= {ess 2}
-- This node contains objects that describe surface transportation
-- environmental information which deviate from the BUFR Standards.
```

5.2 Identification Objects

```
-- These are objects used to describe the identification of the
-- environmental sensor station.
essNtcipIdentification  OBJECT IDENTIFIER ::= {essNtcip 1 }
```

5.2.1 Station Category

```
essNtcipCategory OBJECT-TYPE
SYNTAX      INTEGER {   other (1),
                        permanent (2),
                        transportable (3),
                        mobile (4)}
ACCESS      read-only
STATUS      mandatory
DESCRIPTION "<Definition>Indicates the category of station as it relates to
mobility.
<DescriptiveName>ESS.category:code
<Valid Value Rule>
value          description
other          of a design not listed in this standard.
permanent      not designed to be relocated.
transportable  able to be relocated, but does not take readings while moving.
mobile         capable of taking readings while moving.
<Data Concept Type>Data Element
<Object Identifier> 1.3.6.1.4.1.1206.4.2.5.2.1.1"
::=   { essNtcipIdentification 1 }
```

5.2.2 Site Description

```
essNtcipSiteDescription OBJECT-TYPE
SYNTAX      DisplayString (SIZE (0..255))
ACCESS      read-write
STATUS      mandatory
DESCRIPTION "<Definition>A textual description of the station's location.
<Informative>Version 02 of the standard incorrectly defined a SetConstraint
of read-only, even though the object has always been defined with an ACCESS
of read-write. This was corrected in version 03.
<DescriptiveName>ESS.siteDescription:text
<Data Concept Type>Data Element
<Object Identifier> 1.3.6.1.4.1.1206.4.2.5.2.1.2"
::=   { essNtcipIdentification 2 }
```

5.3 Data Instrumentation Objects

```
-- Contains objects used to describe the type of data and the type of
-- instrumentation used to collect the data being received from the
-- ess.
essBufrInstrumentation  OBJECT IDENTIFIER ::= { essBufr 2 }
essNtcipInstrumentation OBJECT IDENTIFIER ::= { essNtcip 15 }
```

© 2022 AASHTO / ITE / NEMA

```
-- It is also recognized that there would be a great value of an object
-- to indicate the quality of data; however, this is a very complex
-- topic and thus we have not determined an appropriate
-- mechanism.
```

5.3.1 Type of Station

```
essTypeofStation OBJECT-TYPE
SYNTAX      INTEGER (0..3)
ACCESS      read-only
STATUS      mandatory
DESCRIPTION "<Definition>Integer value that indicates the type of station. If
the station is a hybrid station, it shall be defined as two stations, one
staffed and one automatic.
<Informative>The value of 2 has been explicitly defined as being reserved. To
be defined as two stations (e.g., for a hybrid), a station needs to have two
addresses and two instances of this MIB.
<DescriptiveName>ESS.typeOfStation:code
<Valid Value Rule>
value               description
0 - automatic      the data is collected electronically/mechanically
1 - staffed        the data is collected by humans
2 - reserved
3 - missingValue   the type of station is unknown.
<Data Concept Type>Data Element
<Object Identifier> 1.3.6.1.4.1.1206.4.2.5.1.2.1"
REFERENCE   "WMO Binary Code Form FM 94 BUFR Table B item 0 02 001"
::=   { essBufrInstrumentation 1 }
```

5.3.2 Door Status

```
essDoorStatus OBJECT-TYPE
SYNTAX      INTEGER (0..1)
ACCESS      read-only
STATUS      mandatory
DESCRIPTION "<Definition>Indicates whether any of the doors attached to the
station are open. If the value is one (1), at least one door is open; if the
value is zero (0), all doors associated with the ESS are closed.
<DescriptiveName>ESS.doorOpen:code
<Data Concept Type>Data Element
<Object Identifier> 1.3.6.1.4.1.1206.4.2.5.2.15.1"
::=   { essNtcipInstrumentation 1 }
```

5.3.3 Battery Status

```
essBatteryStatus OBJECT-TYPE
SYNTAX      INTEGER (0..101)
ACCESS      read-only
STATUS      mandatory
DESCRIPTION "<Definition>Indicates the current charge stored in the battery.
<DescriptiveName>ESS.batteryCharge:quantity
<Valid Value Rule>Values 0 to 100 indicate percent of full charge. The value
101 indicates an error in determining the percent of charge.
<Data Concept Type>Data Element
<Unit>Percent
<Object Identifier> 1.3.6.1.4.1.1206.4.2.5.2.15.2"
```

 © 2022 AASHTO / ITE / NEMA

```
::=   { essNtcipInstrumentation 2 }
```

5.3.4 Line Volts

```
essLineVolts OBJECT-TYPE
SYNTAX      INTEGER (0..255)
ACCESS      read-only
STATUS      mandatory
DESCRIPTION "<Definition>Indicates the voltage measured on the incoming power
line for the controller. The value reported indicates one-half of the actual
voltage; thus, this object indicates a value of 55 when the voltage is 110
Vrms. This object shall only be used to indicate A/C power conditions. If the
line power is DC, this object shall not apply (i.e., either is not supported
or has a value of 255) and the essBatteryStatus object shall indicate the
status of the batteries.
<DescriptiveName>ESS.lineVolts:quantity
<Valid Value Rule>Values 0 through 254 shall indicate valid values. The value
254 shall mean a voltage of 508 Vrms or greater. The value of 255 shall
indicate an error condition or missing value.
<Data Concept Type>Data Element
<Unit>2 Volts Root Mean Squared (Vrms) (i.e., the value reported shall be
one-half the actual voltage).
<Object Identifier> 1.3.6.1.4.1.1206.4.2.5.2.15.3"
::=   { essNtcipInstrumentation 3 }
```

5.3.5 Station Meta Data Block

```
-- This object has been deprecated. See Annex D.2.10 for more information.
essStationMetaDataBlock OBJECT-TYPE
SYNTAX      OerString
ACCESS      read-only
STATUS      deprecated
DESCRIPTION "<Definition>An OER encoded string of the EssStationMetaData
structure as defined below. This object is used for uploading configuration
data from the ESS in a bandwidth efficient manner.

The OPTIONAL fields shall be present if the data is supported by the
implementation and is valid. The OPTIONAL fields shall be omitted for any
data that is invalid or not supported by the implementation.

EssStationMetaData ::= SEQUENCE {
essNtcipCategory.0,                 OPTIONAL,   -- @NTCIP1204-v03
essTypeOfStation.0,                 OPTIONAL,   -- @NTCIP1204-v03
essLatitude.0,                      OPTIONAL,   -- @NTCIP1204-v03
essLongitude.0,                     OPTIONAL,   -- @NTCIP1204-v03
essReferenceHeight.0,               OPTIONAL,   -- @NTCIP1204-v03
essPressureHeight.0,                OPTIONAL,   -- @NTCIP1204-v03
essWindSensorHeight.0,              OPTIONAL,   -- @NTCIP1204-v03
temperatureMetaData     SEQUENCE OF TemperatureMetaData     OPTIONAL,
pavementMetaData        SEQUENCE OF PavementMetaData  OPTIONAL,
subSurfaceMetaData      SEQUENCE OF SubSurfaceMetaData      OPTIONAL,
treatmentMetaData       SEQUENCE OF TreatmentMetaData OPTIONAL
}

TemperatureMetaData ::= SEQUENCE {
essTemperatureSensorIndex.x         OPTIONAL,   -- @NTCIP1204-v03
essTemperatureSensorHeight.x        OPTIONAL    -- @NTCIP1204-v03
```

© 2022 AASHTO / ITE / NEMA

```
}

PavementMetaData ::= SEQUENCE {
essPavementSensorIndex.x,           OPTIONAL,   -- @NTCIP1204-v03
essPavementType.x,                  OPTIONAL,   -- @NTCIP1204-v03
essPavementElevation.x              OPTIONAL,   -- @NTCIP1204-v03
essPavementExposure.x               OPTIONAL,   -- @NTCIP1204-v03
essPavementSensorType.x             OPTIONAL    -- @NTCIP1204-v03
}

SubSurfaceMetaData ::= SEQUENCE {
essSubSurfaceSensorIndex.x          OPTIONAL,   -- @NTCIP1204-v03
essSubSurfaceType.x                 OPTIONAL,   -- @NTCIP1204-v03
essSubSurfaceSensorDepth.x          OPTIONAL    -- @NTCIP1204-v03
}

TreatmentMetaData ::= SEQUENCE {
essPavementTreatmentIndex.x         OPTIONAL,   -- @NTCIP1204-v03
essPaveTreatProductType.x           OPTIONAL,   -- @NTCIP1204-v03
essPaveTreatProductForm.x           OPTIONAL,   -- @NTCIP1204-v03
essPercentProductMix.x              OPTIONAL    -- @NTCIP1204-v03
}
<Informative>This object has been replaced by essStationMetaDataV3Block (See
5.3.8).
<DescriptiveName>ESS.stationMetaDataBlock:frame
<Data Concept Type>Data Element
<Object Identifier> 1.3.6.1.4.1.1206.4.2.5.2.15.4"
::=   { essNtcipInstrumentation 4 }
```

5.3.6 Weather Block

```
-- This object has been deprecated. See Annex D.2.10 for more information.
essWeatherBlock OBJECT-TYPE
SYNTAX      OerString
ACCESS      read-only
STATUS      deprecated
DESCRIPTION "<Definition>An OER encoded string of the EssWeatherData
structure as defined in Section 4. This object is used for uploading current
weather data from the ESS in a bandwidth efficient manner.

The OPTIONAL fields shall be present if the data is supported by the
implementation and is valid. The OPTIONAL fields shall be omitted for any
data that is invalid or not supported by the implementation.

EssWeatherData ::= SEQUENCE {
essAtmosphericPressure.0            OPTIONAL,   -- @NTCIP1204-v03
essWindData                         EssWindData             OPTIONAL,
essTemperatureData                  EssTemperatureData      OPTIONAL,
essPrecipData                       EssPrecipData           OPTIONAL,
essVisibilityData                   EssVisibilityData       OPTIONAL
}

EssWindData ::= SEQUENCE {
essAvgWindDirection.0               OPTIONAL,   -- @NTCIP1204-v03
essAvgWindSpeed.0                   OPTIONAL,   -- @NTCIP1204-v03
essWindSituation.0                  OPTIONAL,   -- @NTCIP1204-v03
essMaxWindGustSpeed.0               OPTIONAL,   -- @NTCIP1204-v03
```

 © 2022 AASHTO / ITE / NEMA

```
essMaxWindGustDir.0                OPTIONAL,   -- @NTCIP1204-v03
essSpotWindDirection.0             OPTIONAL,   -- @NTCIP1204-v03
essSpotWindSpeed.0                 OPTIONAL    -- @NTCIP1204-v03
}

EssTemperatureData ::= SEQUENCE {
essWetBulbTemp.0                   OPTIONAL,   -- @NTCIP1204-v03
essDewpointTemp.0                  OPTIONAL,   -- @NTCIP1204-v03
essMaxTemp.0                       OPTIONAL,   -- @NTCIP1204-v03
essMinTemp.0                       OPTIONAL,   -- @NTCIP1204-v03
essRelativeHumidity.0              OPTIONAL,   -- @NTCIP1204-v03
      -- for (
--    x = 1;
--    x < essNumTemperatureSensors.0;
--    x++)
temperatureTable              SEQUENCE OF Temperature OPTIONAL
}

Temperature ::= SEQUENCE {
essTemperatureSensorIndex.x        OPTIONAL,   -- @NTCIP1204-v03
essAirTemperature.x                OPTIONAL    -- @NTCIP1204-v03
}

EssPrecipData ::= SEQUENCE {
essWaterDepth.0                    OPTIONAL,   -- @NTCIP1204-v03
essAdjacentSnowDepth.0             OPTIONAL,   -- @NTCIP1204-v03
essRoadwaySnowDepth.0              OPTIONAL,   -- @NTCIP1204-v03
essRoadwaySnowPackDepth.0          OPTIONAL,   -- @NTCIP1204-v03
essPrecipYesNo.0                   OPTIONAL,   -- @NTCIP1204-v03
essPrecipRate.0                    OPTIONAL,   -- @NTCIP1204-v03
essSnowfallAccumRate.0             OPTIONAL,   -- @NTCIP1204-v03
essPrecipSituation.0               OPTIONAL,   -- @NTCIP1204-v03
essIceThickness.0                  OPTIONAL,   -- @NTCIP1204-v03
essPrecipitationStartTime.0        OPTIONAL,   -- @NTCIP1204-v03
essPrecipitationEndTime.0          OPTIONAL    -- @NTCIP1204-v03
}

essPrecipitationOneHour.0          OPTIONAL,   -- @NTCIP1204-v03
essPrecipitationThreeHours.0       OPTIONAL,   -- @NTCIP1204-v03
essPrecipitationSixHours.0         OPTIONAL,   -- @NTCIP1204-v03
essPrecipitationTwelveHours.0      OPTIONAL,   -- @NTCIP1204-v03
essPrecipitation24Hours.0          OPTIONAL    -- @NTCIP1204-v03

EssVisibilityData ::= SEQUENCE {
essSolarRadiation.0                OPTIONAL,   -- @NTCIP1204-v03
essTotalSun.0                      OPTIONAL,   -- @NTCIP1204-v03
essCloudSituation.0                OPTIONAL,   -- @NTCIP1204-v03
essVisibility.0                    OPTIONAL,   -- @NTCIP1204-v03
essVisibilitySituation.0           OPTIONAL    -- @NTCIP1204-v03
}
<Informative>This object has been replaced by essWeatherV3Block (See 5.3.9).
<DescriptiveName>ESS.weatherBlock:frame
<Data Concept Type>Data Element
<Object Identifier> 1.3.6.1.4.1.1206.4.2.5.2.15.5"
::=   { essNtcipInstrumentation 5 }
```

© 2022 AASHTO / ITE / NEMA Copy Per MIB Distribution Permission

5.3.7 Mobile Block

```
-- This object has been deprecated. See Annex D.3.2 for more information.
essMobileBlock OBJECT-TYPE
SYNTAX      OerString
ACCESS      read-only
STATUS      deprecated
DESCRIPTION "<Definition>An OER encoded string of the EssMobileData structure
as defined below. This object is used for uploading current mobile station
data from the ESS in a bandwidth efficient manner.

The OPTIONAL fields shall be present if the data is supported by the
implementation and is valid. The OPTIONAL fields shall be omitted for any
data that is invalid or not supported by the implementation.

EssMobileData ::= SEQUENCE {
      essLatitude.0                       OPTIONAL, -- @NTCIP1204-v03
      essLongitude.0                      OPTIONAL, -- @NTCIP1204-v03
      essReferenceHeight.0                OPTIONAL, -- @NTCIP1204-v03
      essVehicleSpeed.0                   OPTIONAL, -- @NTCIP1204-v03
      essVehicleBearing.0                 OPTIONAL, -- @NTCIP1204-v03
      essVehicleOdometer.0                OPTIONAL, -- @NTCIP1204-v03
      essMobileFriction.0                 OPTIONAL, -- @NTCIP1204-v03
      essMobileObservationGroundState.0   OPTIONAL, -- @NTCIP1204-v03
      essMobileObservationPavement.0      OPTIONAL, -- @NTCIP1204-v03
      essPaveTreatmentAmount.0            OPTIONAL, -- @NTCIP1204-v03
      essPaveTreatmentWidth.0             OPTIONAL  -- @NTCIP1204-v03
      }
<DescriptiveName>MobilePlatform.mobileBlock:frame
<Data Concept Type>Data Element
<Object Identifier> 1.3.6.1.4.1.1206.4.2.5.2.15.6"
::=   { essNtcipInstrumentation 6 }
```

5.3.8 Station Meta Data Block Version 3

```
-- This object has been deprecated. See Annex D.3.2 for more information.
essStationMetaDataV3Block OBJECT-TYPE
SYNTAX      OerString
ACCESS      read-only
STATUS      deprecated
DESCRIPTION "<Definition>An OER encoded string of the EssStationMetaDataV3
structure as defined below. This object is used for uploading configuration
data from the ESS in a bandwidth efficient manner.

The OPTIONAL fields shall be present if the data is supported by the
implementation and is valid. The OPTIONAL fields shall be omitted for any
data that is invalid or not supported by the implementation.

EssStationMetaDataV3 ::= SEQUENCE {
essNtcipCategory.0,                 OPTIONAL,   -- @NTCIP1204-v03
essTypeOfStation.0,                 OPTIONAL,   -- @NTCIP1204-v03
essLatitude.0,                      OPTIONAL,   -- @NTCIP1204-v03
essLongitude.0,                     OPTIONAL,   -- @NTCIP1204-v03
essReferenceHeight.0,               OPTIONAL,   -- @NTCIP1204-v03
essPressureHeight.0,                OPTIONAL,   -- @NTCIP1204-v03
precipitationSensorModelInformation.0     OPTIONAL -- @NTCIP1204-v03
windMetaData.0,         SEQUENCE OF WindMetaData            OPTIONAL,
```

 © 2022 AASHTO / ITE / NEMA

```
temperatureMetaData     SEQUENCE OF TemperatureMetaData     OPTIONAL,
pavementMetaData        SEQUENCE OF PavementMetaData        OPTIONAL,
subSurfaceMetaData      SEQUENCE OF SubSurfaceMetaData      OPTIONAL,
treatmentMetaData       SEQUENCE OF TreatmentMetaData       OPTIONAL,
}

WindMetaData ::= SEQUENCE {
windSensorIndex.x                   OPTIONAL,   -- @NTCIP1204-v03
windSensorHeight.x                  OPTIONAL,   -- @NTCIP1204-v03
}

TemperatureMetaData ::= SEQUENCE {
essTemperatureSensorIndex.x         OPTIONAL,   -- @NTCIP1204-v03
essTemperatureSensorHeight.x        OPTIONAL,   -- @NTCIP1204-v03
}

PavementMetaData ::= SEQUENCE {
essPavementSensorIndex.x,           OPTIONAL,   -- @NTCIP1204-v03
essPavementType.x,                  OPTIONAL,   -- @NTCIP1204-v03
essPavementElevation.x              OPTIONAL,   -- @NTCIP1204-v03
essPavementExposure.x               OPTIONAL,   -- @NTCIP1204-v03
essPavementSensorType.x             OPTIONAL,   -- @NTCIP1204-v03
pavementSensorModelInformation.x    OPTIONAL,   -- @NTCIP1204-v03
pavementSensorTemperatureDepth.x    OPTIONAL    -- @NTCIP1204-v03
}

SubSurfaceMetaData ::= SEQUENCE {
essSubSurfaceSensorIndex.x          OPTIONAL,   -- @NTCIP1204-v03
essSubSurfaceType.x                 OPTIONAL,   -- @NTCIP1204-v03
essSubSurfaceSensorDepth.x          OPTIONAL,   -- @NTCIP1204-v03
}

TreatmentMetaData ::= SEQUENCE {
essPavementTreatmentIndex.x         OPTIONAL,   -- @NTCIP1204-v03
essPaveTreatProductType.x           OPTIONAL,   -- @NTCIP1204-v03
essPaveTreatProductForm.x           OPTIONAL,   -- @NTCIP1204-v03
essPercentProductMix.x              OPTIONAL,   -- @NTCIP1204-v03
}
<DescriptiveName>ESS.stationMetaDataBlock:frame
<Data Concept Type>Data Element
<Object Identifier> 1.3.6.1.4.1.1206.4.2.5.2.15.7"
::=   { essNtcipInstrumentation 7 }
```

5.3.9 Weather Block Version 3

```
-- This object has been deprecated. See Annex D.3.2 for more information.
essWeatherV3Block OBJECT-TYPE
SYNTAX      OerString
ACCESS      read-only
STATUS      deprecated
DESCRIPTION "<Definition>An OER encoded string of the EssWeatherDataV3
structure as defined below. This object is used for uploading current weather
data from the ESS in a bandwidth efficient manner.

The OPTIONAL fields shall be present if the data is supported by the
implementation and is valid. The OPTIONAL fields shall be omitted for any
data that is invalid or not supported by the implementation.
```

© 2022 AASHTO / ITE / NEMA Copy Per MIB Distribution Permission

```
EssWeatherDataV3 ::= SEQUENCE {
essAtmosphericPressure.0            OPTIONAL,   -- @NTCIP1204-v03
essWindData                   SEQUENCE OF EssWindDataV3     OPTIONAL,
essTemperatureData                  EssTemperatureData      OPTIONAL,
essPrecipData                       EssPrecipDataV3         OPTIONAL,
essVisibilityData                   EssVisibilityDataV3     OPTIONAL,
essRadiationData                    EssRadiationData        OPTIONAL,
}

EssWindDataV3 ::= SEQUENCE {
windSensorIndex.x                   OPTIONAL,   -- @NTCIP1204-v03
windSensorAvgSpeed.x                OPTIONAL,   -- @NTCIP1204-v03
windSensorAvgDirection.x            OPTIONAL,   -- @NTCIP1204-v03
windSensorSpotSpeed.x               OPTIONAL,   -- @NTCIP1204-v03
windSensorSpotDirection.x           OPTIONAL,   -- @NTCIP1204-v03
windSensorGustSpeed.x               OPTIONAL,   -- @NTCIP1204-v03
windSensorGustDirection.x           OPTIONAL,   -- @NTCIP1204-v03
windSensorSituation.x               OPTIONAL,   -- @NTCIP1204-v03
}

EssTemperatureData ::= SEQUENCE {
essWetBulbTemp.0                    OPTIONAL,   -- @NTCIP1204-v03
essDewpointTemp.0                   OPTIONAL,   -- @NTCIP1204-v03
essMaxTemp.0                        OPTIONAL,   -- @NTCIP1204-v03
essMinTemp.0                        OPTIONAL,   -- @NTCIP1204-v03
essRelativeHumidity.0               OPTIONAL,   -- @NTCIP1204-v03
      -- for (
--    x = 1;
--    x < essNumTemperatureSensors.0;
--    x++)
temperatureTable              SEQUENCE OF Temperature OPTIONAL,
}

Temperature ::= SEQUENCE {
essTemperatureSensorIndex.x         OPTIONAL,   -- @NTCIP1204-v03
essAirTemperature.x                 OPTIONAL,   -- @NTCIP1204-v03
}

EssPrecipDataV3 ::= SEQUENCE {
waterLevelSensorTable               SEQUENCE OF WaterLevel  OPTIONAL,
essAdjacentSnowDepth.0              OPTIONAL,   -- @NTCIP1204-v03
essRoadwaySnowDepth.0               OPTIONAL,   -- @NTCIP1204-v03
essRoadwaySnowPackDepth.0           OPTIONAL,   -- @NTCIP1204-v03
essPrecipYesNo.0                    OPTIONAL,   -- @NTCIP1204-v03
essPrecipRate.0                     OPTIONAL,   -- @NTCIP1204-v03
essSnowfallAccumRate.0              OPTIONAL,   -- @NTCIP1204-v03
essPrecipSituation.0                OPTIONAL,   -- @NTCIP1204-v03
essIceThickness.0                   OPTIONAL,   -- @NTCIP1204-v03
essPrecipitationStartTime.0         OPTIONAL,   -- @NTCIP1204-v03
essPrecipitationEndTime.0           OPTIONAL,   -- @NTCIP1204-v03
}

WaterLevel ::= SEQUENCE {
waterLevelSensorIndex.x             OPTIONAL,   -- @NTCIP1204-v03
waterLevelSensorReading.x           OPTIONAL,   -- @NTCIP1204-v03
}
```

 © 2022 AASHTO / ITE / NEMA

```
EssVisibilityDataV3 ::= SEQUENCE {
essVisibility.0                     OPTIONAL,   -- @NTCIP1204-v03
essVisibilitySituation.0            OPTIONAL,   -- @NTCIP1204-v03
}

EssRadiationData ::= SEQUENCE {
essTotalSun.0                       OPTIONAL,   -- @NTCIP1204-v03
essInstantaneousTerrestrialRadiation.0    OPTIONAL, -- @NTCIP1204-v03
essInstantaneousSolarRadiation.0    OPTIONAL,   -- @NTCIP1204-v03
essTotalRadiation.0                 OPTIONAL,   -- @NTCIP1204-v03
essTotalRadiationPeriod.0           OPTIONAL,   -- @NTCIP1204-v03
essCloudSituation.0                 OPTIONAL,   -- @NTCIP1204-v03
}
<DescriptiveName>ESS.weatherBlock:frame
<Data Concept Type>Data Element
<Object Identifier> 1.3.6.1.4.1.1206.4.2.5.2.15.8"
::=   { essNtcipInstrumentation 8 }
```

5.3.10 ESS Status

```
essStatus OBJECT-TYPE
SYNTAX      INTEGER (0..3)
ACCESS      read-only
STATUS      mandatory
DESCRIPTION "<Definition>Integer value that indicates whether an error
condition has been detected in the ESS hardware or software.
<DescriptiveName>ESS.status:code
<Valid Value Rule>
value                   description
0 - noError             no error is reported
1 - watchdogFailure     the watchdog has failed
2 - powerError          irregular occurrence detected with primary power
                        source
3 - sensorFailure       condition detected preventing proper reporting or a
                        sensor value is deemed invalid or suspect
<Data Concept Type>Data Element
<Object Identifier> 1.3.6.1.4.1.1206.4.2.5.2.15.9"
::=   { essNtcipInstrumentation 9 }
```

5.4 Location Objects

```
-- Contains objects used to describe the location of the ess that is
-- transmitting the collected data.
essNtcipLocation OBJECT IDENTIFIER ::= {essNtcip 2 }
```

5.4.1 Latitude

```
essLatitude OBJECT-TYPE
SYNTAX      INTEGER (-90000000..90000001)
ACCESS      read-only
STATUS      mandatory
DESCRIPTION "<Definition>The latitude in 10^-6 degrees of the ESS station,
per WGS-84 datum.
<DescriptiveName>ESS.latitude:quantity
```

© 2022 AASHTO / ITE / NEMA

```
<Valid Value Rule>The essLatitude at the North Pole is 90,000,000. The
essLatitude at the South Pole is -90,000,000. The value 90,000,001 shall
indicate a missing value.
<Data Concept Type>Data Element
<Unit>latitude
<Object Identifier> 1.3.6.1.4.1.1206.4.2.5.2.2.1"
REFERENCE   "Resolution based on on-going location referencing activities;
the WMO Binary Code Form FM 94 BUFR Table B item 0 05 001 can be obtained by
dividing this value by 10."
::=   { essNtcipLocation 1 }
```

5.4.2 Longitude

```
essLongitude OBJECT-TYPE
SYNTAX      INTEGER (-180000000..180000001)
ACCESS      read-only
STATUS      mandatory
DESCRIPTION "<Definition>The east longitude in 10^-6 degrees from the Prime
Meridian of the ESS location.
<DescriptiveName>ESS.longitude:quantity
<Valid Value Rule>The essLongitude of 180 degrees West shall be -180,000,000.
The essLongitude of 180 degrees East shall be 180,000,000. The value
180,000,001 shall indicate a missing value.
<Data Concept Type>Data Element
<Unit>longitude
<Object Identifier> 1.3.6.1.4.1.1206.4.2.5.2.2.2"
REFERENCE   "Resolution based on on-going location referencing activities;
the WMO Binary Code Form FM 94 BUFR Table B item 0 06 001 can be obtained by
dividing this value by 10."
::=   { essNtcipLocation 2 }
```

5.4.3 Vehicle Speed

```
essVehicleSpeed OBJECT-TYPE
SYNTAX      INTEGER (0..255)
ACCESS      read-only
STATUS      mandatory
DESCRIPTION "<Definition>Indicates the current speed being reported by the
vehicle in kilometers per hour.
<DescriptiveName>MobilePlatform.speed:quantity
<Valid Value Rule>The value 255 shall indicate an error condition or missing
value.
<Data Concept Type>Data Element
<Unit>kilometers per hour
<Object Identifier> 1.3.6.1.4.1.1206.4.2.5.2.2.3"
::=   { essNtcipLocation 3 }
```

5.4.4 Vehicle Bearing

```
essVehicleBearing OBJECT-TYPE
SYNTAX      INTEGER (0..361)
ACCESS      read-only
STATUS      mandatory
DESCRIPTION "<Definition>Indicates the current bearing of the vehicle in
degrees, measured clockwise from True North.
<DescriptiveName>MobilePlatform.bearing:quantity
```

 © 2022 AASHTO / ITE / NEMA

```
<Valid Value Rule>The value 0 shall indicate that the vehicle is stopped. The
value 361 shall indicate an error condition or missing value.
<Data Concept Type>Data Element
<Unit>degrees
<Object Identifier> 1.3.6.1.4.1.1206.4.2.5.2.2.4"
::=   { essNtcipLocation 4 }
```

5.4.5 Odometer

```
essOdometer OBJECT-TYPE
SYNTAX      Counter
ACCESS      read-only
STATUS      mandatory
DESCRIPTION "<Definition>Indicates the distance traveled, in meters, by the
vehicle from a reference point. Could be a vehicle odometer reading or a
calculation from the vehicle's GPS.
<DescriptiveName>MobilePlatform.odometer:quantity
<Data Concept Type>Data Element
<Unit>meters
<Object Identifier> 1.3.6.1.4.1.1206.4.2.5.2.2.5"
::=   { essNtcipLocation 5 }
```

5.5 Station Elevation Objects

```
-- Contains objects used to describe the elevation and atmospheric
-- pressure at the ess that is transmitting the collected data along
-- with the height of various sensors
essNtcipHeight OBJECT IDENTIFIER ::= {essNtcip 3 }
essBufrLocationVertical OBJECT IDENTIFIER ::= {essBufr 7 }
essNtcipPressure OBJECT IDENTIFIER ::= {essNtcip 16 }
```

5.5.1 Reference Height

```
essReferenceHeight OBJECT-TYPE
SYNTAX      INTEGER (-400..8001)
ACCESS      read-only
STATUS      mandatory
DESCRIPTION "<Definition>The reference elevation of the ESS in meters above
mean sea level. For a permanent station, this height shall be measured to the
base of the structure; for transportable stations, this height shall be
measured to the ground surface upon which the station resides; and for
mobile, this height shall be measured to the surface under the vehicle.
<DescriptiveName>ESS.referenceHeight:quantity
<Valid Value Rule>The value of 8001 shall indicate a missing value.
<Data Concept Type>Data Element
<Unit>meters
<Object Identifier> 1.3.6.1.4.1.1206.4.2.5.2.3.1"
REFERENCE   "Resolution based on WMO Binary Code Form FM 94 BUFR Table B item
0 07 001."
::=   { essNtcipHeight 1 }
```

5.5.2 Pressure Height

```
-- This object has been deprecated. See Annex D.3.3.1 for more information.
essPressureHeight OBJECT-TYPE
SYNTAX      INTEGER (-1000..1001)
```

© 2022 AASHTO / ITE / NEMA Copy Per MIB Distribution Permission

```
ACCESS      read-only
STATUS      deprecated
DESCRIPTION "<Definition>The height of the pressure sensor with respect to
the essReferenceHeight in meters.
<DescriptiveName>PressureSensor.pressureHeight:quantity
<Valid Value Rule>The value of 1001 shall indicate a missing value.
<Data Concept Type>Data Element
<Unit>meters
<Object Identifier> 1.3.6.1.4.1.1206.4.2.5.2.3.2"
REFERENCE   "essReferenceHeight plus this value equals the WMO Binary Code
Form FM 94 BUFR Table B item 0 07 001."
::=   { essNtcipHeight 2 }
```

5.5.3 Wind Sensor Height

```
-- This object has been deprecated. See Annex D.1.3 for more information.
essWindSensorHeight OBJECT-TYPE
SYNTAX      INTEGER (-1000..1001)
ACCESS      read-only
STATUS      deprecated
DESCRIPTION "<Definition>The height of the primary wind sensor with respect
to the essReferenceHeight in meters.
<Valid Value Rule>The value of 1001 shall indicate a missing value.
<Data Concept Type>Data Element
<Unit>meters
<Object Identifier> 1.3.6.1.4.1.1206.4.2.5.2.3.3"
::=   { essNtcipHeight 3 }
```

5.5.4 Atmospheric Pressure

```
-- This object has been deprecated. See Annex D.3.3.1 for more information.
essAtmosphericPressure OBJECT-TYPE
SYNTAX      INTEGER (0..65535)
ACCESS      read-only
STATUS      deprecated
DESCRIPTION "<Definition>The force per unit area exerted by the atmosphere in
1/10ths of millibars, a.k.a. tenths of hectoPascals.
<DescriptiveName>PressureSensor.atmosphericPressure:quantity
<Valid Value Rule>A value of 65535 shall indicate an error condition or
missing value.
<Data Concept Type>Data Element
<Unit>Decapascal
<Object Identifier> 1.3.6.1.4.1.1206.4.2.5.1.7.4"
REFERENCE   "WMO Binary Code Form FM 94 BUFR Table B item 0 07 004."
::=   { essBufrLocationVertical 4 }
```

5.5.5 Number of Pressure Sensors

```
essNumPressureSensors OBJECT-TYPE
SYNTAX      INTEGER (0..255)
ACCESS      read-only
STATUS      mandatory
DESCRIPTION "<Definition>Indicates the number of entries in the pressure
sensor table.
```

 © 2022 AASHTO / ITE / NEMA

```
<Informative>This value may automatically change upon connecting or
disconnecting a sensor; however, the table is still defined as a static table
since the creation/deletion of rows is not managed through SNMP logic.
<DescriptiveName>PressureSensorTable.numSensors:quantity
<Data Concept Type>Data Element
<Unit>count
<Object Identifier> 1.3.6.1.4.1.1206.4.2.5.2.16.1"
::=   { essNtcipPressure 1 }
```

5.5.6 Pressure Sensor Table

```
essPressureSensorTable OBJECT-TYPE
SYNTAX      SEQUENCE OF EssPressureSensorEntry
ACCESS      not-accessible
STATUS      mandatory
DESCRIPTION "<Definition>Table containing the pressure sensor data.
<DescriptiveName>PressureSensorTable
<Data Concept Type>Class
<TableType>static
<Object Identifier> 1.3.6.1.4.1.1206.4.2.5.2.16.2"
::=   { essNtcipPressure 2 }
```

5.5.7 Pressure Sensor

```
essPressureSensorEntry OBJECT-TYPE
SYNTAX      EssPressureSensorEntry
ACCESS      not-accessible
STATUS      mandatory
DESCRIPTION "<Definition>A pressure sensor is a sensor that reports the
atmospheric pressure. It can be described through a number of attributes as
indicated by the following subclauses.
<DescriptiveName>PressureSensor
<Data Concept Type>Class"
INDEX { essPressureSensorIndex }
::=   { essPressureSensorTable 1 }

EssPressureSensorEntry ::= SEQUENCE {
      essPressureSensorIndex              INTEGER,
      essPressureSensorHeight             INTEGER,
      essPressureSensorLatitude           INTEGER,
      essPressureSensorLongitude          INTEGER,
      essPressureSensorLocation           DisplayString,
      essPressureSensorModelInformation   INTEGER,
      -- SENSOR READINGS
      essPressureSensorAtmosphericPressure      INTEGER}
```

5.5.7.1 Pressure Sensor Index

```
essPressureSensorIndex OBJECT-TYPE
SYNTAX      INTEGER (1..255)
ACCESS      read-only
STATUS      mandatory
DESCRIPTION "<Definition>Enumerated list of row entries that provide
atmospheric pressure sensor data.
<DescriptiveName>PressureSensor.index:identifier
<Data Concept Type>Data Element
```

© 2022 AASHTO / ITE / NEMA

```
<Object Identifier> 1.3.6.1.4.1.1206.4.2.5.2.16.2.1.1"
::= { essPressureSensorEntry 1 }
```

5.5.7.2 Pressure Sensor Height

```
essPressureSensorHeight OBJECT-TYPE
SYNTAX      INTEGER (-1000..1001)
ACCESS      read-write
STATUS      mandatory
DESCRIPTION "<Definition>The height of the pressure sensor with respect to
the essReferenceHeight in meters.
<DescriptiveName>PressureSensor.height:quantity
<Valid Value Rule>The value of 1001 shall indicate a missing value.
<Data Concept Type>Data Element
<Unit>meters
<Object Identifier> 1.3.6.1.4.1.1206.4.2.5.2.16.2.1.2"
REFERENCE   "essReferenceHeight plus this value equals the WMO Binary Code
Form FM 94 BUFR Table B item 0 07 001."
::=   { essPressureSensorEntry 2 }
```

5.5.7.3 Pressure Sensor Latitude

```
essPressureSensorLatitude OBJECT-TYPE
SYNTAX      INTEGER (-90000000..90000001)
ACCESS      read-write
STATUS      mandatory
DESCRIPTION "<Definition>The latitude in 10^-6 degrees of the ESS pressure
sensor, per WGS-84 datum.
<DescriptiveName>PressureSensor.latitude:quantity
<Valid Value Rule>The essPressureLatitude at the North Pole is 90,000,000.
The essPressureLatitude at the South Pole is -90,000,000. The value
90,000,001 shall indicate a missing value.
<Data Concept Type>Data Element
<Unit>latitude
<Object Identifier> 1.3.6.1.4.1.1206.4.2.5.2.16.2.1.3"
REFERENCE   "Resolution based on on-going location referencing activities;
the WMO Binary Code Form FM 94 BUFR Table B item 0 05 001 can be obtained by
dividing this value by 10."
::=   { essPressureSensorEntry 3 }
```

5.5.7.4 Pressure Sensor Longitude

```
essPressureSensorLongitude OBJECT-TYPE
SYNTAX      INTEGER (-180000000..180000001)
ACCESS      read-write
STATUS      mandatory
DESCRIPTION "<Definition>The east longitude in 10^-6 degrees from the Prime
Meridian of the ESS pressure sensor location.
<DescriptiveName>PressureSensor.longitude:quantity
<Valid Value Rule>The essPressureLongitude of 180 degrees West shall be -
180,000,000. The essPressureLongitude of 180 degrees East shall be
180,000,000. The value 180,000,001 shall indicate a missing value.
<Data Concept Type>Data Element
<Unit>longitude
<Object Identifier> 1.3.6.1.4.1.1206.4.2.5.2.16.2.1.4"
```

 © 2022 AASHTO / ITE / NEMA

```
REFERENCE   "Resolution based on on-going location referencing activities;
the WMO Binary Code Form FM 94 BUFR Table B item 0 06 001 can be obtained by
dividing this value by 10."
::=   { essPressureSensorEntry 4 }
```

5.5.7.5 Pressure Sensor Location

```
essPressureSensorLocation OBJECT-TYPE
SYNTAX      DisplayString (SIZE (0..255))
ACCESS      read-write
STATUS      mandatory
DESCRIPTION "<Definition>A textual string indicating the location of the
pressure sensor.
<DescriptiveName>PressureSensor.location:text
<Data Concept Type>Data Element
<Object Identifier> 1.3.6.1.4.1.1206.4.2.5.2.16.2.1.5"
::= { essPressureSensorEntry 5 }
```

5.5.7.6 Pressure Sensor Model Information

```
essPressureSensorModelInformation OBJECT-TYPE
SYNTAX      INTEGER (0..255)
ACCESS      read-write
STATUS      mandatory
DESCRIPTION "<Definition>Indicates the row in the Module Table (See NTCIP
1201) that contains information about the make, model, and version number of
the sensor associated with this row of the Pressure Sensor Table.
<DescriptiveName>PressureSensor.modelInformation:identifier
<Valid Value Rule>The value of zero indicates that this information is not
available.
<Data Concept Type>Data Element
<Object Identifier> 1.3.6.1.4.1.1206.4.2.5.2.16.2.1.6"
::= { essPressureSensorEntry 6 }
```

5.5.7.7 Pressure Sensor Atmospheric Pressure

```
essPressureSensorAtmosphericPressure OBJECT-TYPE
SYNTAX      INTEGER (0..65535)
ACCESS      read-only
STATUS      mandatory
DESCRIPTION "<Definition>The force per unit area exerted by the atmosphere in
1/10ths of millibars, a.k.a. tenths of hectoPascals.
<DescriptiveName>PressureSensor.atmosphericPressure:quantity
<Valid Value Rule>A value of 65535 shall indicate an error condition or
missing value.
<Data Concept Type>Data Element
<Unit>Decapascal
<Object Identifier> 1.3.6.1.4.1.1206.4.2.5.2.16.2.1.7"
REFERENCE   "WMO Binary Code Form FM 94 BUFR Table B item 0 07 004."
::=   { essPressureSensorEntry 7 }
```

© 2022 AASHTO / ITE / NEMA Copy Per MIB Distribution Permission

5.6 Wind Data Section

```
-- Contains objects used to describe the wind data that is collected at
-- the ess.
essBufrWind OBJECT IDENTIFIER ::= {essBufr 11 }
essNtcipWind OBJECT IDENTIFIER ::= {essNtcip 4 }
```

5.6.1 Average Wind Direction

```
-- This object has been deprecated. See Annex D.1.3 for more information.
essAvgWindDirection OBJECT-TYPE
SYNTAX      INTEGER (0..361)
ACCESS      read-only
STATUS      deprecated
DESCRIPTION "<Definition>A two minute average of the direction from which the
wind is blowing measured clockwise in degrees from true North and measured at
a height as indicated by essWindSensorHeight. A value of 361 shall indicate
an error condition or missing value.
<Data Concept Type>Data Element
<Unit>degrees
<Object Identifier> 1.3.6.1.4.1.1206.4.2.5.1.11.1"
REFERENCE   "WMO Code Form FM 94 BUFR Table B item 0 11 001."
::=   { essBufrWind 1 }
```

5.6.2 Average Wind Speed

```
-- This object has been deprecated. See Annex D.1.3 for more information.
essAvgWindSpeed OBJECT-TYPE
SYNTAX      INTEGER (0..65535)
ACCESS      read-only
STATUS      deprecated
DESCRIPTION "<Definition>A two minute average of the wind speed in tenths of
meters per second as measured by the primary wind sensor.
<Valid Value Rule>The value of 65535 shall indicate an error condition or
missing value.
<Data Concept Type>Data Element
<Unit>tenths of meters per second
<Object Identifier> 1.3.6.1.4.1.1206.4.2.5.1.11.2"
REFERENCE   "WMO Binary Code Form FM 94 BUFR Table B item 0 11 002."
::=   { essBufrWind 2 }
```

5.6.3 Spot Wind Direction

```
-- This object has been deprecated. See Annex D.1.3 for more information.
essSpotWindDirection OBJECT-TYPE
SYNTAX      INTEGER (0..361)
ACCESS      read-only
STATUS      deprecated
DESCRIPTION "<Definition>The direction from which the wind is blowing
measured in degrees clockwise from true North and measured at a height as
indicated by essWindSensorHeight. A value of 361 shall indicate an error
condition or missing value. For mobile platforms, the wind direction shall be
corrected for vehicle movement.
<Data Concept Type>Data Element
<Unit>degrees
<Object Identifier> 1.3.6.1.4.1.1206.4.2.5.2.4.1"
::=   { essNtcipWind 1 }
```

Copy Per MIB Distribution Permission © 2022 AASHTO / ITE / NEMA

5.6.4 Spot Wind Speed

```
-- This object has been deprecated. See Annex D.1.3 for more information.
essSpotWindSpeed OBJECT-TYPE
SYNTAX      INTEGER (0..65535)
ACCESS      read-only
STATUS      deprecated
DESCRIPTION "<Definition>The wind speed in tenths of meters per second
measured by the primary wind sensor. For mobile platforms, the wind speed
shall be corrected for vehicle movement.
<Valid Value Rule>The value of 65535 shall indicate an error condition or
missing value.
<Data Concept Type>Data Element
<Unit>tenths of meters per second
<Object Identifier> 1.3.6.1.4.1.1206.4.2.5.2.4.1"
::=   { essNtcipWind 2 }
```

5.6.5 Wind Situation

```
-- This object has been deprecated. See Annex D.1.3 for more information.
essWindSituation OBJECT-TYPE
SYNTAX      INTEGER {   other (1),
                        unknown (2),
                        calm (3),
                        lightBreeze (4),
                        moderateBreeze (5),
                        strongBreeze (6),
                        gale (7),
                        moderateGale (8),
                        strongGale (9),
                        stormWinds (10),
                        hurricaneForceWinds (11),
                        gustyWinds (12)}
ACCESS      read-only
STATUS      deprecated
DESCRIPTION "<Definition>Describes the weather and travel situation in terms
of wind from staffed stations only. Specific ranges for these values are
defined in the Glossary of Meteorology.
<Valid Value Rule>
Range       Meaning
other       not defined within this standard, see manufacturers documentation
unknown     Unknown conditions
calm        Calm
lightBreeze Light breeze
moderateBreeze    Moderate breeze
strongBreeze      Strong breeze
gale        Gale
moderateGale      Moderate gale
strongGale  Strong gale
stormWinds  Storm winds
hurricaneForceWinds     Hurricane force winds
gustyWinds  defined by a peak and a lull of greater than 46.3 tenths of
            meters per second within a 2 minute period.
<Data Concept Type>Data Element
<Object Identifier> 1.3.6.1.4.1.1206.4.2.5.2.4.3"
::=   { essNtcipWind 3 }
```

© 2022 AASHTO / ITE / NEMA

5.6.6 Wind Gust Speed

```
-- This object has been deprecated. See Annex D.1.3 for more information.
essMaxWindGustSpeed OBJECT-TYPE
SYNTAX      INTEGER (0..65535)
ACCESS      read-only
STATUS      deprecated
DESCRIPTION "<Definition>The maximum wind gust recorded by the primary wind
sensor during the 10 minutes preceding the observation measured in tenths of
meters per second.
<Valid Value Rule>The value 65535 shall indicate an error condition or
missing value.
<Data Concept Type>Data Element
<Unit>tenths of meters per second
<Object Identifier> 1.3.6.1.4.1.1206.4.2.5.1.11.41"
REFERENCE   "WMO Code Form FM 94 BUFR Table B item 0 11 041."
::=   { essBufrWind 41 }
```

5.6.7 Wind Gust Direction

```
-- This object has been deprecated. See Annex D.1.3 for more information.
essMaxWindGustDir OBJECT-TYPE
SYNTAX      INTEGER (0..361)
ACCESS      read-only
STATUS      deprecated
DESCRIPTION "<Definition>The direction of the maximum wind gust recorded
during the 10 minutes preceding the observation at a height as indicated by
essWindSensorHeight; measured in degrees clockwise from true North. The value
361 shall indicate an error condition or missing value.
<Data Concept Type>Data Element
<Unit>degrees
<Object Identifier> 1.3.6.1.4.1.1206.4.2.5.1.11.43"
REFERENCE   "WMO Code Form FM 94 BUFR Table B item 0 11 043."
::=   { essBufrWind 43 }
```

5.6.8 Number of Wind Sensors

```
windSensorTableNumSensors OBJECT-TYPE
SYNTAX      INTEGER (0..255)
ACCESS      read-only
STATUS      mandatory
DESCRIPTION "<Definition>Indicates the number of entries in the wind sensor
table.
<Informative>This value may automatically change upon connecting or
disconnecting a sensor; however, the table is still defined as a static table
since the creation/deletion of rows is not managed through SNMP logic.
<DescriptiveName>WindSensorTable.numSensors:quantity
<Data Concept Type>Data Element
<Unit>count
<Object Identifier> 1.3.6.1.4.1.1206.4.2.5.2.4.7"
::=   { essNtcipWind 7 }
```

5.6.9 Wind Sensor Table

```
windSensorTable OBJECT-TYPE
```

 © 2022 AASHTO / ITE / NEMA

```
SYNTAX      SEQUENCE OF WindSensorEntry
ACCESS      not-accessible
STATUS      mandatory
DESCRIPTION "<Definition>Table containing the wind sensor data fields.
<DescriptiveName>WindSensorTable
<Data Concept Type>Class
<TableType> static
<Object Identifier> 1.3.6.1.4.1.1206.4.2.5.2.4.8"
::=   { essNtcipWind 8 }
```

5.6.10 Wind Sensor

```
windSensorEntry OBJECT-TYPE
SYNTAX      WindSensorEntry
ACCESS      not-accessible
STATUS      mandatory
DESCRIPTION "<Definition>Parameters for specific wind sensor data fields.
<DescriptiveName>WindSensor
<Data Concept Type>Class"
INDEX { windSensorIndex }
::=   { windSensorTable 1 }

WindSensorEntry ::= SEQUENCE {
      windSensorIndex               INTEGER,
      windSensorHeight              INTEGER,
      windSensorLocation            DisplayString,
      windSensorAvgSpeed            INTEGER,
      windSensorAvgDirection        INTEGER,
      windSensorSpotSpeed           INTEGER,
      windSensorSpotDirection       INTEGER,
      windSensorGustSpeed           INTEGER,
      windSensorGustDirection       INTEGER,
      windSensorSituation           INTEGER,
      windSensorLatitude            INTEGER,
      windSensorLongitude           INTEGER,
      windSensorModelInformation    INTEGER }
```

5.6.10.1 Wind Sensor Index

```
windSensorIndex OBJECT-TYPE
SYNTAX      INTEGER (1..255)
ACCESS      read-only
STATUS      mandatory
DESCRIPTION "<Definition>Enumerated list of row entries that provide wind
sensor data. The first entry shall be that of the primary wind sensor.
<DescriptiveName>WindSensor.index:identifier
<Data Concept Type>Data Element
<Object Identifier> 1.3.6.1.4.1.1206.4.2.5.2.4.8.1.1"
::= { windSensorEntry 1 }
```

5.6.10.2 Wind Sensor Height

```
windSensorHeight OBJECT-TYPE
SYNTAX      INTEGER (-1000..1001)
ACCESS      read-write
STATUS      mandatory
```

© 2022 AASHTO / ITE / NEMA Copy Per MIB Distribution Permission

```
DESCRIPTION "<Definition>The height of the wind sensor with respect to the
essReferenceHeight in meters.
<Informative>Changed to read-write from read-only in NTCIP 1204 v04.
<DescriptiveName>WindSensor.height:quantity
<Valid Value Rule>The value of 1001 shall indicate a missing value.
<Data Concept Type>Data Element
<Unit>meters
<Object Identifier> 1.3.6.1.4.1.1206.4.2.5.2.4.8.1.2"
::= { windSensorEntry 2 }
```

5.6.10.3 Wind Sensor Location

```
windSensorLocation OBJECT-TYPE
SYNTAX      DisplayString (SIZE (0..255))
ACCESS      read-write
STATUS      mandatory
DESCRIPTION "<Definition>A textual string indicating the location of the wind
sensor.
<DescriptiveName>WindSensor.location:text
<Data Concept Type>Data Element
<Object Identifier> 1.3.6.1.4.1.1206.4.2.5.2.4.8.1.3"
::= { windSensorEntry 3 }
```

5.6.10.4 Wind Sensor Average Speed

```
windSensorAvgSpeed OBJECT-TYPE
SYNTAX      INTEGER (0..65535)
ACCESS      read-only
STATUS      mandatory
DESCRIPTION "<Definition>A two minute average of the wind speed in tenths of
meters per second as measured by the wind sensor.
<DescriptiveName>WindSensor.avgSpeed:quantity
<Valid Value Rule>The value of 65535 shall indicate an error condition or
missing value.
<Data Concept Type>Data Element
<Unit>tenths of meters per second
<Object Identifier> 1.3.6.1.4.1.1206.4.2.5.2.4.8.1.4"
REFERENCE "WMO Binary Code Form FM 94 BUFR Table B item 0 11 002."
::= { windSensorEntry 4 }
```

5.6.10.5 Wind Sensor Average Direction

```
windSensorAvgDirection OBJECT-TYPE
SYNTAX      INTEGER (0..361)
ACCESS      read-only
STATUS      mandatory
DESCRIPTION "<Definition>A two minute mode (average) of the direction from
which the wind is blowing measured clockwise in degrees from true north as
measured by the wind sensor.
<DescriptiveName>WindSensor.avgDirection:quantity
<Valid Value Rule>The value of zero (0) shall indicate 'calm', when the
associated speed is zero (0), or 'light and variable,' when the associated
speed is greater than zero (0). Normal observations, as defined by the WMO,
shall report a wind direction in the range of 1 to 360 with 90 meaning from
the east and 360 meaning from the north. The value of 361 shall indicate an
```

 © 2022 AASHTO / ITE / NEMA

```
error condition and shall always be reported if the associated speed
indicates error.
<Data Concept Type>Data Element
<Unit>degrees
<Object Identifier> 1.3.6.1.4.1.1206.4.2.5.2.4.8.1.5"
REFERENCE "WMO Code Form FM 94 BUFR Table B item 0 11 001."
::= { windSensorEntry 5 }
```

5.6.10.6 Wind Sensor Spot Speed

```
windSensorSpotSpeed OBJECT-TYPE
SYNTAX      INTEGER (0..65535)
ACCESS      read-only
STATUS      mandatory
DESCRIPTION "<Definition>The wind speed in tenths of meters per second
measured by the wind sensor. For mobile platforms, the wind speed shall be
corrected for vehicle movement.
<DescriptiveName>WindSensor.spotSpeed:quantity
<Valid Value Rule>The value of 65535 shall indicate an error condition or
missing value.
<Data Concept Type>Data Element
<Unit>tenths of meters per second
<Object Identifier> 1.3.6.1.4.1.1206.4.2.5.2.4.8.1.6"
::= { windSensorEntry 6 }
```

5.6.10.7 Wind Sensor Spot Direction

```
windSensorSpotDirection OBJECT-TYPE
SYNTAX      INTEGER (0..361)
ACCESS      read-only
STATUS      mandatory
DESCRIPTION "<Definition>The direction from which the wind is blowing
measured in degrees clockwise from true North as measured by the wind sensor.
For mobile platforms, the wind direction shall be corrected for vehicle
movement.
<DescriptiveName>WindSensor.spotDirection:quantity
<Valid Value Rule>The value of zero (0) shall indicate 'calm', when the
associated speed is zero (0), or 'light and variable,' when the associated
speed is greater than zero (0). Normal observations, as defined by the WMO,
shall report a wind direction in the range of 1 to 360 with 90 meaning from
the east and 360 meaning from the north. The value of 361 shall indicate an
error condition and shall always be reported if the associated speed
indicates error.
<Data Concept Type>Data Element
<Unit>degrees
<Object Identifier> 1.3.6.1.4.1.1206.4.2.5.2.4.8.1.7"
::= { windSensorEntry 7 }
```

5.6.10.8 Wind Sensor Gust Speed

```
windSensorGustSpeed OBJECT-TYPE
SYNTAX      INTEGER (0..65535)
ACCESS      read-only
STATUS      mandatory
```

© 2022 AASHTO / ITE / NEMA Copy Per MIB Distribution Permission

```
DESCRIPTION "<Definition>The maximum wind gust recorded by the wind sensor
during the 10 minutes preceding the observation measured in tenths of meters
per second.
<DescriptiveName>WindSensor.gustSpeed:quantity
<Valid Value Rule>The value of 65535 shall indicate an error condition or
missing value.
<Data Concept Type>Data Element
<Unit>tenths of meters per second
<Object Identifier> 1.3.6.1.4.1.1206.4.2.5.2.4.8.1.8"
REFERENCE "WMO Code Form FM 94 BUFR Table B item 0 11 041."
::= { windSensorEntry 8 }
```

5.6.10.9 Wind Sensor Gust Direction

```
windSensorGustDirection OBJECT-TYPE
SYNTAX      INTEGER (0..361)
ACCESS      read-only
STATUS      mandatory
DESCRIPTION "<Definition>The direction of the maximum wind gust recorded
during the 10 minutes preceding the observation measured in degrees clockwise
from true North by the wind sensor.
<DescriptiveName>WindSensor.gustDirection:quantity
<Valid Value Rule>The value of zero (0) shall indicate 'calm', when the
associated speed is zero (0), or 'light and variable,' when the associated
speed is greater than zero (0). Normal observations, as defined by the WMO,
shall report a wind direction in the range of 1 to 360 with 90 meaning from
the east and 360 meaning from the north. The value of 361 shall indicate an
error condition and shall always be reported if the associated speed
indicates error.
<Data Concept Type>Data Element
<Unit>degrees
<Object Identifier> 1.3.6.1.4.1.1206.4.2.5.2.4.8.1.9"
REFERENCE "WMO Code Form FM 94 BUFR Table B item 0 11 043."
::= { windSensorEntry 9 }
```

5.6.10.10 Wind Sensor Situation

```
windSensorSituation OBJECT-TYPE
SYNTAX      INTEGER {   other (1),
                        unknown (2),
                        calm (3),
                        lightBreeze (4),
                        moderateBreeze (5),
                        strongBreeze (6),
                        gale (7),
                        moderateGale (8),
                        strongGale (9),
                        stormWinds (10),
                        hurricaneForceWinds (11),
                        gustyWinds (12)}
ACCESS      read-only
STATUS      mandatory
DESCRIPTION "<Definition> The assessment of the wind situation from a staffed
station as defined by the Beaufort Wind Scale in the Glossary of Meteorology.
Specific ranges for these values are defined in the Glossary of Meteorology.
<DescriptiveName>WindSensor.situation:code
<Valid Value Rule>
```

 © 2022 AASHTO / ITE / NEMA

```
Range       Meaning (WMO Classification)
other       not defined within this standard, see manufacturers documentation
unknown     Unknown conditions
calm        Calm - Light air
lightBreeze Light breeze - Gentle breeze
moderateBreeze    Moderate breeze - Fresh breeze
strongBreeze      Strong breeze
gale        Near Gale
moderateGale      Gale
strongGale  Strong gale
stormWinds  Storm
hurricaneForceWinds     Violent Store - Hurricane
gustyWinds  defined by a peak and a lull of greater than 46.3 tenths of
            meters per second within a 2 minute period.
<Data Concept Type>Data Element
<Object Identifier> 1.3.6.1.4.1.1206.4.2.5.2.4.8.1.10"
::= { windSensorEntry 10 }
```

5.6.10.11 Wind Sensor Latitude

```
windSensorLatitude OBJECT-TYPE
SYNTAX      INTEGER (-90000000..90000001)
ACCESS      read-write
STATUS      mandatory
DESCRIPTION "<Definition>The latitude in 10^-6 degrees of the ESS wind
sensor, per WGS-84 datum.
<DescriptiveName>WindSensor.latitude:quantity
<Valid Value Rule>The windSensorLatitude at the North Pole is 90,000,000. The
windSensorLatitude at the South Pole is -90,000,000. The value 90,000,001
shall indicate a missing value.
<Data Concept Type>Data Element
<Unit>latitude
<Object Identifier> 1.3.6.1.4.1.1206.4.2.5.2.4.8.1.11"
REFERENCE   "Resolution based on on-going location referencing activities;
the WMO Binary Code Form FM 94 BUFR Table B item 0 05 001 can be obtained by
dividing this value by 10."
::=   { windSensorEntry 11 }
```

5.6.10.12 Wind Sensor Longitude

```
windSensorLongitude OBJECT-TYPE
SYNTAX      INTEGER (-180000000..180000001)
ACCESS      read-write
STATUS      mandatory
DESCRIPTION "<Definition>The east longitude in 10^-6 degrees from the Prime
Meridian of the ESS wind sensor location.
<DescriptiveName>WindSensor.longitude:quantity
<Valid Value Rule>The windSensorLongitude of 180 degrees West shall be -
180,000,000. The windSensorLongitude of 180 degrees East shall be
180,000,000. The value 180,000,001 shall indicate a missing value.
<Data Concept Type>Data Element
<Unit>longitude
<Object Identifier> 1.3.6.1.4.1.1206.4.2.5.2.4.8.1.12"
REFERENCE   "Resolution based on on-going location referencing activities;
the WMO Binary Code Form FM 94 BUFR Table B item 0 06 001 can be obtained by
dividing this value by 10."
::=   { windSensorEntry 12 }
```

© 2022 AASHTO / ITE / NEMA Copy Per MIB Distribution Permission

5.6.10.13 Wind Sensor Model Information

```
windSensorModelInformation OBJECT-TYPE
SYNTAX      INTEGER (0..255)
ACCESS      read-only
STATUS      mandatory
DESCRIPTION "<Definition>Indicates the row in the Module Table (See NTCIP
1201) that contains information about the make, model, and version number of
the sensor associated with this row of the Wind Sensor Table.
<DescriptiveName>WindSensor.modelInformation:identifier
<Valid Value Rule>The value of zero indicates that this information is not
available.
<Data Concept Type>Data Element
<Object Identifier> 1.3.6.1.4.1.1206.4.2.5.2.4.8.1.13"
::= { windSensorEntry 13 }
```

5.7 Temperature Data Objects

```
-- Contains objects used to describe the temperature data that is
-- collected at the ess.
essNtcipTemperature OBJECT IDENTIFIER ::= {essNtcip 5}
```

5.7.1 Number of Temperature Sensors

```
essNumTemperatureSensors OBJECT-TYPE
SYNTAX      INTEGER (0..255)
ACCESS      read-only
STATUS      mandatory
DESCRIPTION "<Definition>Indicates the number of entries in the temperature
sensor table.
<Informative>This value may automatically change upon connecting or
disconnecting a sensor; however, the table is still defined as a static table
since the creation/deletion of rows is not managed through SNMP logic.
<DescriptiveName>TemperatureSensorTable.numSensors:quantity
<Data Concept Type>Data Element
<Unit>count
<Object Identifier> 1.3.6.1.4.1.1206.4.2.5.2.5.1"
::=   { essNtcipTemperature 1 }
```

5.7.2 Temperature Sensor Table

```
essTemperatureSensorTable OBJECT-TYPE
SYNTAX      SEQUENCE OF EssTemperatureSensorEntry
ACCESS      not-accessible
STATUS      mandatory
DESCRIPTION "<Definition>Table containing the temperature sensor data fields.
<DescriptiveName>TemperatureSensorTable
<Data Concept Type>Class
<TableType> static
<Object Identifier> 1.3.6.1.4.1.1206.4.2.5.2.5.2"
::=   { essNtcipTemperature 2 }
```

5.7.3 Temperature Sensor

```
essTemperatureSensorEntry OBJECT-TYPE
```

 © 2022 AASHTO / ITE / NEMA

```
SYNTAX      EssTemperatureSensorEntry
ACCESS      not-accessible
STATUS      mandatory
DESCRIPTION "<Definition>Parameters for specific temperature sensor as
described through a number of attributes as indicated by the following
subclauses.
<DescriptiveName>TemperatureSensor
<Data Concept Type>Class"
INDEX { essTemperatureSensorIndex }
::=   { essTemperatureSensorTable 1 }

EssTemperatureSensorEntry ::= SEQUENCE {
      essTemperatureSensorIndex                 INTEGER,
      essTemperatureSensorHeight                INTEGER,
      essAirTemperature                         INTEGER,
      essTemperatureSensorLatitude              INTEGER,
      essTemperatureSensorLongitude             INTEGER,
      essTemperatureSensorLocation              DisplayString,
      essTemperatureSensorModelInformation      INTEGER}
```

5.7.3.1 Temperature Sensor Index

```
essTemperatureSensorIndex OBJECT-TYPE
SYNTAX      INTEGER (1..255)
ACCESS      read-only
STATUS      mandatory
DESCRIPTION "<Definition>Enumerated list of row entries that provide
temperature sensor data.
<DescriptiveName>TemperatureSensor.index:identifier
<Data Concept Type>Data Element
<Object Identifier> 1.3.6.1.4.1.1206.4.2.5.2.5.2.1.1"
::= { essTemperatureSensorEntry 1 }
```

5.7.3.2 Temperature Sensor Height

```
essTemperatureSensorHeight OBJECT-TYPE
SYNTAX      INTEGER (-1000..1001)
ACCESS      read-write
STATUS      mandatory
DESCRIPTION "<Definition>The height of the temperature sensor as measured in
meters above essReferenceHeight.
<Informative>Changed to read-write from read-only in NTCIP 1204 v04.
<DescriptiveName>TemperatureSensor.height:quantity
<Valid Value Rule>The value 1001 shall indicate a missing value.
<Data Concept Type>Data Element
<Unit>meters
<Object Identifier> 1.3.6.1.4.1.1206.4.2.5.2.5.2.1.2"
::= { essTemperatureSensorEntry 2 }
```

5.7.3.3 Air Temperature

```
essAirTemperature OBJECT-TYPE
SYNTAX      INTEGER (-1000..1001)
ACCESS      read-only
STATUS      mandatory
```

© 2022 AASHTO / ITE / NEMA

```
DESCRIPTION "<Definition>The dry-bulb temperature in tenths of degrees
Celsius. The temperature is an instantaneous reading at the height specified
by essTemperatureSensorHeight.
<DescriptiveName>TemperatureSensor.airTemperature:quantity
<Valid Value Rule>The value 1001 shall indicate an error condition or missing
value.
<Data Concept Type>Data Element
<Unit>tenths of degrees Celsius
<Object Identifier> 1.3.6.1.4.1.1206.4.2.5.2.5.2.1.3"
REFERENCE "Resolution is based on WMO Binary Code Form FM 94 BUFR Table B
item 0 12 001; temperature in Kelvin is determined by adding 273.15 to this
value."
::= { essTemperatureSensorEntry 3 }
```

5.7.3.4 Temperature Sensor Latitude

```
essTemperatureSensorLatitude OBJECT-TYPE
SYNTAX      INTEGER (-90000000..90000001)
ACCESS      read-write
STATUS      mandatory
DESCRIPTION "<Definition>The latitude in 10^-6 degrees of the ESS temperature
sensor, per WGS-84 datum.
<DescriptiveName>TemperatureSensor.latitude:quantity
<Valid Value Rule>The essTemperatureSensorLatitude at the North Pole is
90,000,000. The essTemperatureSensorLatitude at the South Pole is -
90,000,000. The value 90,000,001 shall indicate a missing value.
<Data Concept Type>Data Element
<Unit>latitude
<Object Identifier> 1.3.6.1.4.1.1206.4.2.5.2.5.2.1.4"
REFERENCE   "Resolution based on on-going location referencing activities;
the WMO Binary Code Form FM 94 BUFR Table B item 0 05 001 can be obtained by
dividing this value by 10."
::=   { essTemperatureSensorEntry 4 }
```

5.7.3.5 Temperature Sensor Longitude

```
essTemperatureSensorLongitude OBJECT-TYPE
SYNTAX      INTEGER (-180000000..180000001)
ACCESS      read-write
STATUS      mandatory
DESCRIPTION "<Definition>The east longitude in 10^-6 degrees from the Prime
Meridian of the ESS temperature sensor location.
<DescriptiveName>TemperatureSensor.longitude:quantity
<Valid Value Rule>The essTemperatureSensorLongitude of 180 degrees West shall
be -180,000,000. The essTemperatureSensorLongitude  of 180 degrees East shall
be 180,000,000. The value 180,000,001 shall indicate a missing value.
<Data Concept Type>Data Element
<Unit>longitude
<Object Identifier> 1.3.6.1.4.1.1206.4.2.5.2.5.2.1.5"
REFERENCE   "Resolution based on on-going location referencing activities;
the WMO Binary Code Form FM 94 BUFR Table B item 0 06 001 can be obtained by
dividing this value by 10."
::=   { essTemperatureSensorEntry 5 }
```

5.7.3.6 Temperature Sensor Location

```
essTemperatureSensorLocation OBJECT-TYPE
```

 © 2022 AASHTO / ITE / NEMA

```
SYNTAX      DisplayString (SIZE (0..255))
ACCESS      read-write
STATUS      mandatory
DESCRIPTION "<Definition>A textual string indicating the location of the
temperature sensor.
<DescriptiveName>TemperatureSensor.location:text
<Data Concept Type>Data Element
<Object Identifier> 1.3.6.1.4.1.1206.4.2.5.2.5.2.1.6"
::= { essTemperatureSensorEntry 6 }
```

5.7.3.7 Temperature Sensor Model Information

```
essTemperatureSensorModelInformation OBJECT-TYPE
SYNTAX      INTEGER (0..255)
ACCESS      read-write
STATUS      mandatory
DESCRIPTION "<Definition>Indicates the row in the Module Table (See NTCIP
1201) that contains information about the make, model, and version number of
the sensor associated with this row of the Temperature Sensor Table.
<DescriptiveName>TemperatureSensor.modelInformation:identifier
<Valid Value Rule>The value of zero indicates that this information is not
available.
<Data Concept Type>Data Element
<Object Identifier> 1.3.6.1.4.1.1206.4.2.5.2.5.2.1.7"
::= { essTemperatureSensorEntry 7 }
```

5.7.4 Wetbulb Temperature

```
essWetbulbTemp OBJECT-TYPE
SYNTAX      INTEGER (-1000..1001)
ACCESS      read-only
STATUS      mandatory
DESCRIPTION "<Definition>The wet-bulb temperature in tenths of degrees
Celsius. The temperature is an instantaneous reading by the temperature
sensor specified in the first row of the essTemperatureTable.
<DescriptiveName>TemperatureSensorTable.wetBulbTemp:quantity
<Valid Value Rule>The value 1001 shall indicate an error condition or missing
value.
<Data Concept Type>Data Element
<Unit>tenths of degrees Celsius
<Object Identifier> 1.3.6.1.4.1.1206.4.2.5.2.5.3"
REFERENCE   "is based on WMO Binary Code Form FM 94 BUFR Table B item 0 12
002; temperature in Kelvin is determined by adding 273.15 to this value."
::=   { essNtcipTemperature 3 }
```

5.7.5 Dewpoint Temperature

```
essDewpointTemp OBJECT-TYPE
SYNTAX      INTEGER (-1000..1001)
ACCESS      read-only
STATUS      mandatory
DESCRIPTION "<Definition>The dewpoint temperature in tenths of degrees
Celsius. The temperature is an instantaneous reading by the temperature
sensor specified in the first row specified of the essTemperatureSensorTable.
<DescriptiveName>TemperatureSensorTable.dewpoint:quantity
```

© 2022 AASHTO / ITE / NEMA Copy Per MIB Distribution Permission

```
<Valid Value Rule>The value 1001 shall indicate an error condition or missing
value.
<Data Concept Type>Data Element
<Unit>tenths of degrees Celsius
<Object Identifier> 1.3.6.1.4.1.1206.4.2.5.2.5.4"
REFERENCE   "Resolution is based on WMO Binary Code Form FM 94 BUFR Table B
item 0 12 003; temperature in Kelvin is determined by adding 273.15 to this
value."
::=   { essNtcipTemperature 4 }
```

5.7.6 Maximum Temperature

```
essMaxTemp OBJECT-TYPE
SYNTAX      INTEGER (-1000..1001)
ACCESS      read-only
STATUS      mandatory
DESCRIPTION "<Definition>The maximum temperature in tenths of degrees Celsius
recorded during the 24 hours preceding the observation by the temperature
sensor specified in the first row of the essTemperatureSensorTable.
<DescriptiveName>TemperatureSensorTable.maxTemp:quantity
<Valid Value Rule>The value 1001 shall indicate an error condition or missing
value.
<Data Concept Type>Data Element
<Unit>tenths of degrees Celsius
<Object Identifier> 1.3.6.1.4.1.1206.4.2.5.2.5.5"
REFERENCE   "Resolution is based on WMO Binary Code Form FM 94 BUFR Table B
item 0 12 011; temperature in Kelvin is determined by adding 273.15 to this
value."
::=   { essNtcipTemperature 5 }
```

5.7.7 Minimum Temperature

```
essMinTemp OBJECT-TYPE
SYNTAX      INTEGER (-1000..1001)
ACCESS      read-only
STATUS      mandatory
DESCRIPTION "<Definition>The minimum temperature in tenths of degrees Celsius
recorded during the 24 hours preceding the observation by the temperature
sensor specified in the first row of the essTemperatureSensorTable.
<DescriptiveName>TemperatureSensorTable.minTemp:quantity
<Valid Value Rule>The value 1001 shall indicate an error condition or missing
value.
<Data Concept Type>Data Element
<Unit>tenths of degrees Celsius
<Object Identifier> 1.3.6.1.4.1.1206.4.2.5.2.5.6"
REFERENCE   "Resolution is based on WMO Binary Code Form FM 94 BUFR Table B
item 0 12 012; temperature inKelvin is determined by adding 273.15 to this
value."
::=   { essNtcipTemperature 6 }
```

5.8 Humidity and Precipitation Data Objects

```
-- Contains objects used to describe the humidity and precipitation
-- data that is collected by the ess.
essBufrPrecip OBJECT IDENTIFIER ::= {essBufr 13 }
essNtcipPrecip OBJECT IDENTIFIER ::= {essNtcip 6 }
```

 © 2022 AASHTO / ITE / NEMA

5.8.1 Relative Humidity

```
-- This object has been deprecated. See Annex D.3.3.2 for more information.
essRelativeHumidity OBJECT-TYPE
SYNTAX      INTEGER (0..101)
ACCESS      read-only
STATUS      deprecated
DESCRIPTION "<Definition>The relative humidity in percent.
<DescriptiveName>TemperatureSensorTable.relativeHumidity:quantity
<Valid Value Rule>The value of 101 shall indicate an error condition or
missing value.
<Data Concept Type>Data Element
<Unit>percent humidity
<Object Identifier> 1.3.6.1.4.1.1206.4.2.5.1.13.3"
REFERENCE   "WMO Binary Code Form FM 94 BUFR Table B item 0 13 003."
::=   { essBufrPrecip 3 }
```

5.8.2 Water Depth

```
-- This object has been deprecated. See Annex D.1.4 for more information.
essWaterDepth OBJECT-TYPE
SYNTAX      INTEGER (0..65535)
ACCESS      read-only
STATUS      deprecated
DESCRIPTION "<Definition>Indicates the depth of the water from a user defined
point in centimeters. The value of 65535 shall indicate an error condition or
missing value. This may be used for stream depth, depth of water over a
roadway, reservoir depth, or other such uses.
<DescriptiveName>PrecipitationSensor.waterDepth:quantity
<Data Concept Type>Data Element
<Unit>centimeters
<Object Identifier> 1.3.6.1.4.1.1206.4.2.5.2.6.1"
::=   { essNtcipPrecip 1 }
```

5.8.3 Adjacent Snow Depth

```
-- This object has been deprecated. See Annex D.3.3.3 for more information.
essAdjacentSnowDepth OBJECT-TYPE
SYNTAX      INTEGER (0..3001)
ACCESS      read-only
STATUS      deprecated
DESCRIPTION "<Definition>The depth of snow in centimeters on representative
areas other than the highway pavement, avoiding drifts and plowed areas.
<DescriptiveName>PrecipitationSensor.adjacentSnowDepth:quantity
<Valid Value Rule>The value 3001 shall indicate an error condition or missing
value.
<Data Concept Type>Data Element
<Unit>centimeters
<Object Identifier> 1.3.6.1.4.1.1206.4.2.5.2.6.2"
::=   { essNtcipPrecip 2 }
```

5.8.4 Roadway Snow Depth

```
-- This object has been deprecated. See Annex D.3.3.3 for more information.
essRoadwaySnowDepth OBJECT-TYPE
```

© 2022 AASHTO / ITE / NEMA Copy Per MIB Distribution Permission

```
SYNTAX      INTEGER (0..3001)
ACCESS      read-only
STATUS      deprecated
DESCRIPTION "<Definition>The current depth of unpacked snow in centimeters on
the driving surface.
<DescriptiveName>PrecipitationSensor.roadwaySnowDepth:quantity
<Valid Value Rule>The value 3001 shall indicate an error condition or missing
value.
<Data Concept Type>Data Element
<Unit>centimeters
<Object Identifier> 1.3.6.1.4.1.1206.4.2.5.2.6.3"
::=   { essNtcipPrecip 3 }
```

5.8.5 Roadway Snow Pack Depth

```
-- This object has been deprecated. See Annex D.3.3.3 for more information.
essRoadwaySnowPackDepth OBJECT-TYPE
SYNTAX      INTEGER (0..3001)
ACCESS      read-only
STATUS      deprecated
DESCRIPTION "<Definition>The current depth of packed snow in centimeters on
the roadway surface.
<DescriptiveName>PrecipitationSensor.roadwaySnowPackDepth:quantity
<Valid Value Rule>The value 3001 shall indicate an error condition or missing
value.
<Data Concept Type>Data Element
<Unit>centimeters
<Object Identifier> 1.3.6.1.4.1.1206.4.2.5.2.6.4"
::=   { essNtcipPrecip 4 }
```

5.8.6 Precipitation Indicator

```
-- This object has been deprecated. See Annex D.3.3.3 for more information.
essPrecipYesNo OBJECT-TYPE
SYNTAX      INTEGER {   precip (1),
                        noPrecip (2),
                        error (3)}
ACCESS      read-only
STATUS      deprecated
DESCRIPTION "<Definition>Indicates whether or not moisture is detected by the
sensor.
<DescriptiveName>PrecipitationSensor.precipitationIndicator:code
<Valid Value Rule>
precip - Moisture is currently being detected by the precipitation sensor
noPrecip - Moisture is not currently being detected by the precipitation
sensor
error - The sensor is either not connected, not reporting, or is indicating
an error
<Data Concept Type>Data Element
<Object Identifier> 1.3.6.1.4.1.1206.4.2.5.2.6.5"
::=   { essNtcipPrecip 5 }
```

5.8.7 Rainfall or Water Equivalent of Snow

```
-- This object has been deprecated. See Annex D.3.3.3 for more information.
essPrecipRate OBJECT-TYPE
```

 © 2022 AASHTO / ITE / NEMA

```
SYNTAX      INTEGER (0..65535)
ACCESS      read-only
STATUS      deprecated
DESCRIPTION "<Definition>The rainfall, or water equivalent of snow, rate in
tenths of grams per square meter per second (for rain, this is approximately
to 0.36 mm/hr).
<DescriptiveName>PrecipitationSensor.precipitationRate:quantity
<Valid Value Rule>The value of 65535 shall indicate an error condition or
missing value.
<Data Concept Type>Data Element
<Unit>tenths of grams per square meter per second
<Object Identifier> 1.3.6.1.4.1.1206.4.2.5.1.13.14"
REFERENCE   "WMO Binary Code Form FM 94 BUFR Table B item 0 13 014."
::=   { essBufrPrecip 14 }
```

5.8.8 Snowfall Accumulation Rate

```
-- This object has been deprecated. See Annex D.3.3.3 for more information.
essSnowfallAccumRate OBJECT-TYPE
SYNTAX      INTEGER (0..65535)
ACCESS      read-only
STATUS      deprecated
DESCRIPTION "<Definition>The snowfall accumulation rate in 10^-7 meters per
second (this is equivalent to 0.36 mm/hr).
<DescriptiveName>PrecipitationSensor.snowfallAccumulationRate:quantity
<Valid Value Rule>The value 65535 shall indicate an error condition or
missing value.
<Data Concept Type>Data Element
<Unit>10^-7 meters per second
<Object Identifier> 1.3.6.1.4.1.1206.4.2.5.1.13.15"
REFERENCE   "WMO Binary Code Form FM 94 BUFR Table B item 0 13 015."
::=   { essBufrPrecip 15 }
```

5.8.9 Precipitation Situation

```
essPrecipSituation OBJECT-TYPE
SYNTAX      INTEGER {   other (1),
                        unknown (2),
                        noPrecipitation (3),
                        unidentifiedSlight (4),
                        unidentifiedModerate (5),
                        unidentifiedHeavy (6),
                        snowSlight (7),
                        snowModerate (8),
                        snowHeavy (9),
                        rainSlight (10),
                        rainModerate (11),
                        rainHeavy (12),
                        frozenPrecipitationSlight (13),
                        frozenPrecipitationModerate (14),
                        frozenPrecipitationHeavy (15)}
ACCESS      read-only
STATUS      mandatory
DESCRIPTION "<Definition>Describes the weather situation in terms of
precipitation. For automated stations, describes the intensity and
precipitation type as specified in the first row of the
precipitationSensorTable.
```

© 2022 AASHTO / ITE / NEMA Copy Per MIB Distribution Permission

```
<DescriptiveName>PrecipitationSensor.precipitationSituation:code
<Valid Value Rule>
Intensity     Meaning
slight      < 2mm/h water equivalent
moderate    >= 2 and < 8 mm/h water equivalent
heavy       >= 8 mm/h water equivalent If one exists, the corresponding BUFR
value is indicated for staffed (BUFRs) and automated (BUFRa) stations. The
indicated value can be found in the BUFR Table referenced below. Defined
values are:
Range   BUFRa   BUFRs  Meaning
1                      other
2                      unknown
3                      no precipitation
4                      unidentified slight
5                      unidentified moderate
6                      unidentified heavy
7       171      85    snow slight
8       172      86    snow moderate
9       173      86    snow heavy
10               61    rain slight
11      165      63    rain moderate
12      163      65    rain heavy
13                     frozen precipitation slight
14                     frozen precipitation moderate
15                     frozen precipitation heavy
<Data Concept Type>Data Element
<Object Identifier> 1.3.6.1.4.1.1206.4.2.5.2.6.6"
REFERENCE   "The values identified in the above table for BUFRa and BUFRs can
be found in WMO Binary Code Form FM 94 BUFR Table B item 0 20 003."
::=   { essNtcipPrecip 6 }
```

5.8.10 Ice Deposit (Thickness)

```
-- This object has been deprecated. See Annex D.3.3.3 for more information.
essIceThickness OBJECT-TYPE
SYNTAX      INTEGER (0..65535)
ACCESS      read-only
STATUS      deprecated
DESCRIPTION "<Definition>Indicates the thickness of the ice in millimeters.
<DescriptiveName>PrecipitationSensor.iceDeposit:quantity
<Valid Value Rule>The value 65535 shall indicate an error condition or
missing value.
<Data Concept Type>Data Element
<Unit>millimeters
<Object Identifier> 1.3.6.1.4.1.1206.4.2.5.2.6.7"
::=   { essNtcipPrecip 7 }
```

5.8.11 Precipitation Start Time

```
-- This object has been deprecated. See Annex D.3.3.3 for more information.
essPrecipitationStartTime OBJECT-TYPE
SYNTAX      INTEGER (0..4294967295)
ACCESS      read-only
STATUS      deprecated
DESCRIPTION "<Definition>The time at which the most recent precipitation
event began, measured in seconds since 00:00:00 January 1, 1970 UTC.
<DescriptiveName>PrecipitationSensor.precipitationStartTime:quantity
```

 © 2022 AASHTO / ITE / NEMA

```
<Valid Value Rule>As this standard has been developed long after 1970, a
value of 0 for time should indicate to the management station that the data
received is suspect.
<Data Concept Type>Data Element
<Unit>seconds
<Object Identifier> 1.3.6.1.4.1.1206.4.2.5.2.6.8"
::=   { essNtcipPrecip 8 }
```

5.8.12 Precipitation End Time

```
-- This object has been deprecated. See Annex D.3.3.3 for more information.
essPrecipitationEndTime OBJECT-TYPE
SYNTAX      INTEGER (0..4294967295)
ACCESS      read-only
STATUS      deprecated
DESCRIPTION "<Definition>The time at which the most recently completed
precipitation event ended, measured in seconds since 00:00:00 January 1, 1970
UTC.
<DescriptiveName>PrecipitationSensor.precipitationEndTime:quantity
<Valid Value Rule>As this standard has been developed long after 1970, a
value of 0 for the time should indicate to the management station that the
data received is suspect.
<Data Concept Type>Data Element
<Unit>seconds
<Object Identifier> 1.3.6.1.4.1.1206.4.2.5.2.6.9"
::=   { essNtcipPrecip 9 }
```

5.8.13 Total Precipitation Past One Hour

```
-- This object has been deprecated. See Annex D.3.3.3 for more information.
essPrecipitationOneHour OBJECT-TYPE
SYNTAX      INTEGER (0..65535)
ACCESS      read-only
STATUS      deprecated
DESCRIPTION "<Definition>The total water equivalent precipitation over the
hour preceding the observation in tenths of kilograms per square meter (for
rain, this is approximately tenths of millimeters).
<DescriptiveName>PrecipitationSensor.oneHour:quantity
<Valid Value Rule>The value of 65535 shall indicate an error condition or
missing value.
<Data Concept Type>Data Element
<Unit>tenths of kilograms per square meter
<Object Identifier> 1.3.6.1.4.1.1206.4.2.5.1.13.19"
REFERENCE   "WMO Binary Code Form FM 94 BUFR Table B item 0 13 019."
::=   { essBufrPrecip 19 }
```

5.8.14 Total Precipitation Past Three Hours

```
-- This object has been deprecated. See Annex D.3.3.3 for more information.
essPrecipitationThreeHours OBJECT-TYPE
SYNTAX      INTEGER (0..65535)
ACCESS      read-only
STATUS      deprecated
DESCRIPTION "<Definition>The total water equivalent precipitation over the
three hours preceding the observation in tenths of kilograms per square meter
(for rain, this is approximately tenths of millimeters).
```

© 2022 AASHTO / ITE / NEMA Copy Per MIB Distribution Permission

```
<DescriptiveName>PrecipitationSensor.threeHours:quantity
<Valid Value Rule>The value of 65535 shall indicate an error condition or
missing value.
<Data Concept Type>Data Element
<Unit>tenths of kilograms per square meter
<Object Identifier> 1.3.6.1.4.1.1206.4.2.5.1.13.20"
REFERENCE   "WMO Binary Code Form FM 94 BUFR Table B item 0 13 020."
::=   { essBufrPrecip 20 }
```

5.8.15 Total Precipitation Past Six Hours

```
-- This object has been deprecated. See Annex D.3.3.3 for more information.
essPrecipitationSixHours OBJECT-TYPE
SYNTAX      INTEGER (0..65535)
ACCESS      read-only
STATUS      deprecated
DESCRIPTION "<Definition>The total water equivalent precipitation over the
six hours preceding the observation in tenths of kilograms per square meter
(for rain, this is approximately tenths of millimeters).
<DescriptiveName>PrecipitationSensor.sixHours:quantity
<Valid Value Rule>The value of 65535 shall indicate an error condition or
missing value.
<Data Concept Type>Data Element
<Unit>tenths of kilograms per square meter
<Object Identifier> 1.3.6.1.4.1.1206.4.2.5.1.13.21"
REFERENCE   "WMO Binary Code Form FM 94 BUFR Table B item 0 13 021."
::=   { essBufrPrecip 21 }
```

5.8.16 Total Precipitation Past Twelve Hours

```
-- This object has been deprecated. See Annex D.3.3.3 for more information.
essPrecipitationTwelveHours OBJECT-TYPE
SYNTAX      INTEGER (0..65535)
ACCESS      read-only
STATUS      deprecated
DESCRIPTION "<Definition>The total water equivalent precipitation over the
twelve hours preceding the observation in tenths of kilograms per square
meter (for rain, this is approximately to tenths of millimeters).
<DescriptiveName>PrecipitationSensor.twelveHours:quantity
<Valid Value Rule>The value of 65535 shall indicate an error condition or
missing value.
<Data Concept Type>Data Element
<Unit>tenths of kilograms per square meter
<Object Identifier> 1.3.6.1.4.1.1206.4.2.5.1.13.22"
REFERENCE   "WMO Binary Code Form FM 94 BUFR Table B item 0 13 022."
::=   { essBufrPrecip 22 }
```

5.8.17 Total Precipitation Past Twenty-Four Hours

```
-- This object has been deprecated. See Annex D.3.3.3 for more information.
essPrecipitation24Hours OBJECT-TYPE
SYNTAX      INTEGER (0..65535)
ACCESS      read-only
STATUS      deprecated
```

 © 2022 AASHTO / ITE / NEMA

```
DESCRIPTION "<Definition>The total water equivalent precipitation over the
twenty-four hours preceding the observation in tenths of kilograms per square
meter (for rain, this is equivalent to tenths of millimeters).
<DescriptiveName>PrecipitationSensor.24Hours:quantity
<Valid Value Rule>The value of 65535 shall indicate an error condition or
missing value.
<Data Concept Type>Data Element
<Unit>tenths of kilograms per square meter
<Object Identifier> 1.3.6.1.4.1.1206.4.2.5.1.13.23"
REFERENCE   "WMO Binary Code Form FM 94 BUFR Table B item 0 13 023."
::=   { essBufrPrecip 23 }
```

5.8.18 Precipitation Sensor Model Information

```
-- This object has been deprecated. See Annex D.3.3.3 for more information.
precipitationSensorModelInformation OBJECT-TYPE
SYNTAX      INTEGER (0..255)
ACCESS      read-write
STATUS      deprecated
DESCRIPTION "<Definition>A reference to the row in the Module Table (See
NTCIP 1201) that indicates the manufacturer, model, and version number of the
precipitation sensor.
<DescriptiveName>PrecipitationSensor.modelInformation:identifier
<Valid Value Rule>The value of zero indicates that this information is not
available.
<Data Concept Type>Data Element
<Object Identifier> 1.3.6.1.4.1.1206.4.2.5.2.6.10"
::=   { essNtcipPrecip 10 }
```

5.8.19 Number of Water Level Sensors

```
waterLevelSensorTableNumSensors OBJECT-TYPE
SYNTAX      INTEGER (0..255)
ACCESS      read-only
STATUS      mandatory
DESCRIPTION "<Definition>Indicates the number of entries in the water level
sensor table.
<Informative>This value may automatically change upon connecting or
disconnecting a sensor; however, the table is still defined as a static table
since the creation/deletion of rows is not managed through SNMP logic.
<DescriptiveName>WaterLevelSensorTable.numSensors:quantity
<Data Concept Type>Data Element
<Unit>count
<Object Identifier> 1.3.6.1.4.1.1206.4.2.5.2.6.11"
::=   { essNtcipPrecip 11 }
```

5.8.20 Water Level Sensor Table

```
waterLevelSensorTable OBJECT-TYPE
SYNTAX      SEQUENCE OF WaterLevelSensorEntry
ACCESS      not-accessible
STATUS      mandatory
DESCRIPTION "<Definition>Table containing the water level sensor data fields.
<DescriptiveName>WaterLevelSensorTable
<Data Concept Type>Class
<TableType> static
```

© 2022 AASHTO / ITE / NEMA Copy Per MIB Distribution Permission

```
<Object Identifier> 1.3.6.1.4.1.1206.4.2.5.2.6.12"
::=   { essNtcipPrecip 12 }
```

5.8.21 Water Level Sensor

```
waterLevelSensorEntry OBJECT-TYPE
SYNTAX      WaterLevelSensorEntry
ACCESS      not-accessible
STATUS      mandatory
DESCRIPTION "<Definition>Parameters for a specific water level sensor as
described through a number of attributes as indicated by the following
subclauses.
<DescriptiveName>WaterLevelSensor
<Data Concept Type>Class"
INDEX { waterLevelSensorIndex }
::=   { waterLevelSensorTable 1 }

WaterLevelSensorEntry ::= SEQUENCE {
waterLevelSensorIndex               INTEGER,
waterLevelSensorReading             INTEGER,
waterLevelSensorWarningLevel        INTEGER,
waterLevelSensorHeight              INTEGER,
waterLevelSensorLatitude            INTEGER,
waterLevelSensorLongitude           INTEGER,
waterLevelSensorLocation            DisplayString,
waterLevelSensorModelInformation    INTEGER,
waterLevelSensorReferencePoint      DisplayString }
```

5.8.21.1 Water Level Sensor Index

```
waterLevelSensorIndex OBJECT-TYPE
SYNTAX      INTEGER (1..255)
ACCESS      read-only
STATUS      mandatory
DESCRIPTION "<Definition>Enumerated list of row entries that provide water
level sensor data.
<DescriptiveName>WaterLevelSensor.index:identifier
<Data Concept Type>Data Element
<Object Identifier> 1.3.6.1.4.1.1206.4.2.5.2.6.12.1.1"
::= { waterLevelSensorEntry 1 }
```

5.8.21.2 Water Level Sensor Reading

```
waterLevelSensorReading OBJECT-TYPE
SYNTAX      INTEGER (0..65535)
ACCESS      read-only
STATUS      mandatory
DESCRIPTION "<Definition>Indicates the depth of the water from a user defined
point in centimeters. This may be used for stream depth, depth of water over
a roadway for flooding, reservoir depth, or other such uses.
<DescriptiveName>WaterLevelSensor.reading:quantity
<Valid Value Rule>The value of 65535 shall indicate an error condition or
missing value.
<Data Concept Type>Data Element
<Unit>centimeters
<Object Identifier> 1.3.6.1.4.1.1206.4.2.5.2.6.12.1.2"
```

 © 2022 AASHTO / ITE / NEMA

```
::= { waterLevelSensorEntry 2 }
```

5.8.21.3 Water Level Sensor Warning Level

```
waterLevelSensorWarningLevel OBJECT-TYPE
SYNTAX      INTEGER (0..65535)
ACCESS      read-write
STATUS      mandatory
DESCRIPTION "<Definition>Indicates the depth of the water from a user defined
point in centimeters, that the water level is of concern.
<DescriptiveName>WaterLevelSensor.warningLevel:quantity
<Valid Value Rule>The value of 65535 shall indicate an error condition or
missing value.
<Data Concept Type>Data Element
<Unit>centimeters
<Object Identifier> 1.3.6.1.4.1.1206.4.2.5.2.6.12.1.3"
::= { waterLevelSensorEntry 3 }
```

5.8.21.4 Water Level Sensor Height

```
waterLevelSensorHeight OBJECT-TYPE
SYNTAX      INTEGER (-1000..1001)
ACCESS      read-write
STATUS      mandatory
DESCRIPTION "<Definition> The height of the water level sensor with respect
to the essReferenceHeight in meters.
<DescriptiveName>WaterLevelSensor.height:quantity
<Valid Value Rule>The value of 1001 shall indicate a missing value.
<Data Concept Type>Data Element
<Unit>meters
<Object Identifier> 1.3.6.1.4.1.1206.4.2.5.2.6.12.1.4"
::= { waterLevelSensorEntry 4 }
```

5.8.21.5 Water Level Sensor Latitude

```
waterLevelSensorLatitude OBJECT-TYPE
SYNTAX      INTEGER (-90000000..90000001)
ACCESS      read-write
STATUS      mandatory
DESCRIPTION "<Definition>The latitude in 10^-6 degrees of the ESS water level
sensor, per WGS-84 datum.
<DescriptiveName>WaterLevelSensor.latitude:quantity
<Valid Value Rule>The waterLevelSensorLatitude at the North Pole is
90,000,000. The waterLevelSensorLatitude at the South Pole is -90,000,000.
The value 90,000,001 shall indicate a missing value.
<Data Concept Type>Data Element
<Unit>latitude
<Object Identifier> 1.3.6.1.4.1.1206.4.2.5.2.6.12.1.5"
REFERENCE   "Resolution based on on-going location referencing activities;
the WMO Binary Code Form FM 94 BUFR Table B item 0 05 001 can be obtained by
dividing this value by 10."
::=   { waterLevelSensorEntry 5 }
```

5.8.21.6 Water Level Sensor Longitude

```
waterLevelSensorLongitude OBJECT-TYPE
```

© 2022 AASHTO / ITE / NEMA Copy Per MIB Distribution Permission

```
SYNTAX      INTEGER (-180000000..180000001)
ACCESS      read-write
STATUS      mandatory
DESCRIPTION "<Definition>The east longitude in 10^-6 degrees from the Prime
Meridian of the ESS water level sensor location.
<DescriptiveName>WaterLevelSensor.longitude:quantity
<Valid Value Rule>The waterLevelSensorLongitude of 180 degrees West shall be
-180,000,000. The waterLevelSensorLongitude of 180 degrees East shall be
180,000,000. The value 180,000,001 shall indicate a missing value.
<Data Concept Type>Data Element
<Unit>longitude
<Object Identifier> 1.3.6.1.4.1.1206.4.2.5.2.6.12.1.6"
REFERENCE   "Resolution based on on-going location referencing activities;
the WMO Binary Code Form FM 94 BUFR Table B item 0 06 001 can be obtained by
dividing this value by 10."
::=   { waterLevelSensorEntry 6 }
```

5.8.21.7 Water Level Sensor Location

```
waterLevelSensorLocation OBJECT-TYPE
SYNTAX      DisplayString (SIZE (0..255))
ACCESS      read-write
STATUS      mandatory
DESCRIPTION "<Definition>A textual string indicating the location of the
water level sensor., including a description of the reference point that the
water depth is measured against.
<DescriptiveName>WaterLevelSensor.location:text
<Data Concept Type>Data Element
<Object Identifier> 1.3.6.1.4.1.1206.4.2.5.2.6.12.1.7"
::= { waterLevelSensorEntry 7 }
```

5.8.21.8 Water Level Sensor Model Information

```
waterLevelSensorModelInformation OBJECT-TYPE
SYNTAX      INTEGER (0..255)
ACCESS      read-write
STATUS      mandatory
DESCRIPTION "<Definition>Indicates the row in the Module Table (See NTCIP
1201) that contains information about the make, model, and version number of
the sensor associated with this row of the Water Level Sensor Table.
<DescriptiveName>WaterLevelSensor.modelInformation:identifier
<Valid Value Rule>The value of zero indicates that this information is not
available.
<Data Concept Type>Data Element
<Object Identifier> 1.3.6.1.4.1.1206.4.2.5.2.6.12.1.8"
::= { waterLevelSensorEntry 8 }
```

5.8.21.9 Water Level Sensor Reference Point

```
waterLevelSensorReferencePoint OBJECT-TYPE
SYNTAX      DisplayString (SIZE (0..255))
ACCESS      read-write
STATUS      mandatory
DESCRIPTION "<Definition>A textual string describing the location of the
reference point that the water depth is measured against.
<DescriptiveName>WaterLevelSensor.reference:text
```

 © 2022 AASHTO / ITE / NEMA

```
<Data Concept Type>Data Element
<Object Identifier> 1.3.6.1.4.1.1206.4.2.5.2.6.12.1.9"
::= { waterLevelSensorEntry 9 }
```

5.8.22 Number of Precipitation Sensors

```
precipitationSensorTableNumSensors OBJECT-TYPE
SYNTAX      INTEGER (0..255)
ACCESS      read-only
STATUS      mandatory
DESCRIPTION "<Definition>Indicates the number of entries in the precipitation
sensor table.
<Informative>This value may automatically change upon connecting or
disconnecting a sensor; however, the table is still defined as a static table
since the creation/deletion of rows is not managed through SNMP logic.
<DescriptiveName>PrecipitationSensorTable.numSensors:quantity
<Data Concept Type>Data Element
<Unit>count
<Object Identifier> 1.3.6.1.4.1.1206.4.2.5.2.6.13"
::=   { essNtcipPrecip 13 }
```

5.8.23 Precipitation Sensor Table

```
precipitationSensorTable OBJECT-TYPE
SYNTAX      SEQUENCE OF PrecipitationSensorEntry
ACCESS      not-accessible
STATUS      mandatory
DESCRIPTION "<Definition>Table containing the precipitation sensor data
fields.
<DescriptiveName>PrecipitationSensorTable
<Data Concept Type>Class
<TableType> static
<Object Identifier> 1.3.6.1.4.1.1206.4.2.5.2.6.14"
::=   { essNtcipPrecip 14 }
```

5.8.24 Precipitation Sensor

```
precipitationSensorEntry OBJECT-TYPE
SYNTAX      PrecipitationSensorEntry
ACCESS      not-accessible
STATUS      mandatory
DESCRIPTION "<Definition>Parameters for a specific precipitation sensor as
described through a number of attributes as indicated by the following
subclauses.
<DescriptiveName>PrecipitationSensor
<Data Concept Type>Class"
INDEX { precipitationSensorIndex }
::=   { precipitationSensorTable 1 }

PrecipitationSensorEntry ::= SEQUENCE {
precipitationSensorIndex                  INTEGER,
precipitationSensorHeight                 INTEGER,
precipitationSensorLatitude               INTEGER,
precipitationSensorLongitude              INTEGER,
precipitationSensorLocation         DisplayString,
precipitationSensorModelInformationV4     INTEGER,
```

© 2022 AASHTO / ITE / NEMA

```
precipitationSensorPeriod                 INTEGER,
-- SENSOR READINGS
precipitationSensorAdjacentSnowDepth      INTEGER,
precipitationSensorRoadwaySnowDepth       INTEGER,
precipitationSensorRoadwaySnowPackDepth   INTEGER,
precipitationSensorPrecipYesNo            INTEGER,
precipitationSensorPrecipRate             INTEGER,
precipitationSensorSnowfallAccumRate      INTEGER,
precipitationSensorPrecipSituation        INTEGER,
precipitationSensorIceThickness           INTEGER,
precipitationSensorPrecipitationStartTime INTEGER,
precipitationSensorPrecipitationEndTime   INTEGER,
precipitationSensorPrecipitationOneHour   INTEGER,
precipitationSensorPrecipitationThreeHours      INTEGER,
precipitationSensorPrecipitationSixHours  INTEGER,
precipitationSensorPrecipitationTwelveHours     INTEGER,
precipitationSensorPrecipitation24Hours   INTEGER,
precipitationSensorPrecipitationUserDefined     INTEGER
}
```

5.8.24.1 Precipitation Sensor Index

```
precipitationSensorIndex OBJECT-TYPE
SYNTAX      INTEGER (1..255)
ACCESS      read-only
STATUS      mandatory
DESCRIPTION "<Definition>Enumerated list of row entries that provide
precipitation sensor data.
<DescriptiveName>PrecipitationSensor.index:identifier
<Data Concept Type>Data Element
<Object Identifier> 1.3.6.1.4.1.1206.4.2.5.2.6.14.1.1"
::= { precipitationSensorEntry 1 }
```

5.8.24.2 Precipitation Sensor Height

```
precipitationSensorHeight OBJECT-TYPE
SYNTAX      INTEGER (-1000..1001)
ACCESS      read-write
STATUS      mandatory
DESCRIPTION "<Definition>The height of the precipitation sensor with respect
to the essReferenceHeight in meters.
<DescriptiveName>PrecipitationSensor.height:quantity
<Valid Value Rule>The value of 1001 shall indicate a missing value.
<Data Concept Type>Data Element
<Unit>meters
<Object Identifier> 1.3.6.1.4.1.1206.4.2.5.2.6.14.1.2"
REFERENCE   "essReferenceHeight plus this value equals the WMO Binary Code
Form FM 94 BUFR Table B item 0 07 001."
::=   { precipitationSensorEntry 2 }
```

5.8.24.3 Precipitation Sensor Latitude

```
precipitationSensorLatitude OBJECT-TYPE
SYNTAX      INTEGER (-90000000..90000001)
ACCESS      read-write
STATUS      mandatory
```

 © 2022 AASHTO / ITE / NEMA

```
DESCRIPTION "<Definition>The latitude in 10^-6 degrees of the ESS
precipitation sensor, per WGS-84 datum.
<DescriptiveName>PrecipitationSensor.latitude:quantity
<Valid Value Rule>The precipitationSensorLatitude at the North Pole is
90,000,000. The precipitationSensorLatitude at the South Pole is -90,000,000.
The value 90,000,001 shall indicate a missing value.
<Data Concept Type>Data Element
<Unit>latitude
<Object Identifier> 1.3.6.1.4.1.1206.4.2.5.2.6.14.1.3"
REFERENCE   "Resolution based on on-going location referencing activities;
the WMO Binary Code Form FM 94 BUFR Table B item 0 05 001 can be obtained by
dividing this value by 10."
::=   { precipitationSensorEntry 3 }
```

5.8.24.4 Precipitation Sensor Longitude

```
precipitationSensorLongitude OBJECT-TYPE
SYNTAX      INTEGER (-180000000..180000001)
ACCESS      read-write
STATUS      mandatory
DESCRIPTION "<Definition>The east longitude in 10^-6 degrees from the Prime
Meridian of the ESS precipitation sensor location.
<DescriptiveName>PrecipitationSensor.longitude:quantity
<Valid Value Rule>The precipitationSensorLongitude of 180 degrees West shall
be -180,000,000. The precipitationSensorLongitude of 180 degrees East shall
be 180,000,000. The value 180,000,001 shall indicate a missing value.
<Data Concept Type>Data Element
<Unit>longitude
<Object Identifier> 1.3.6.1.4.1.1206.4.2.5.2.6.14.1.4"
REFERENCE   "Resolution based on on-going location referencing activities;
the WMO Binary Code Form FM 94 BUFR Table B item 0 06 001 can be obtained by
dividing this value by 10."
::=   { precipitationSensorEntry 4 }
```

5.8.24.5 Precipitation Sensor Location

```
precipitationSensorLocation OBJECT-TYPE
SYNTAX      DisplayString (SIZE (0..255))
ACCESS      read-write
STATUS      mandatory
DESCRIPTION "<Definition>A textual string indicating the location of the
precipitation sensor.
<DescriptiveName>PrecipitationSensor.location:text
<Data Concept Type>Data Element
<Object Identifier> 1.3.6.1.4.1.1206.4.2.5.2.6.14.1.5"
::= { precipitationSensorEntry 5 }
```

5.8.24.6 Precipitation Sensor Model Information Version 4

```
precipitationSensorModelInformationV4 OBJECT-TYPE
SYNTAX      INTEGER (0..255)
ACCESS      read-write
STATUS      mandatory
DESCRIPTION "<Definition>A reference to the row in the Module Table (See
NTCIP 1201) that indicates the manufacturer, model, and version number of the
precipitation sensor.
```

© 2022 AASHTO / ITE / NEMA Copy Per MIB Distribution Permission

```
<DescriptiveName>PrecipitationSensor.modelInformation:identifier
<Valid Value Rule>The value of zero indicates that this information is not
available.
<Data Concept Type>Data Element
<Object Identifier> 1.3.6.1.4.1.1206.4.2.5.2.6.14.1.6"
::=   { precipitationSensorEntry 6 }
```

5.8.24.7 Total Precipitation Period

```
precipitationSensorPeriod OBJECT-TYPE
SYNTAX      INTEGER (0..86400)
ACCESS      read-write
STATUS      mandatory
DESCRIPTION "<Definition>The period, in seconds, that corresponds to the
length of time that the total water equivalent is measured in
precipitationSensorPrecipitationUserDefined.
<DescriptiveName>PrecipitationSensor.totalPrecipitationPeriod:quantity
<Data Concept Type>Data Element
<Unit>seconds
<Object Identifier> 1.3.6.1.4.1.1206.4.2.5.2.6.14.1.7"
::=   { precipitationSensorEntry 7 }
```

5.8.24.8 Adjacent Snow Depth

```
precipitationSensorAdjacentSnowDepth OBJECT-TYPE
SYNTAX      INTEGER (0..3001)
ACCESS      read-only
STATUS      mandatory
DESCRIPTION "<Definition>The depth of snow in centimeters on representative
areas other than the highway pavement, avoiding drifts and plowed areas.
<DescriptiveName>PrecipitationSensor.adjacentSnowDepth:quantity
<Valid Value Rule>The value 3001 shall indicate an error condition or missing
value.
<Data Concept Type>Data Element
<Unit>centimeters
<Object Identifier> 1.3.6.1.4.1.1206.4.2.5.2.6.14.1.8"
::=   { precipitationSensorEntry 8 }
```

5.8.24.9 Roadway Snow Depth

```
precipitationSensorRoadwaySnowDepth OBJECT-TYPE
SYNTAX      INTEGER (0..3001)
ACCESS      read-only
STATUS      mandatory
DESCRIPTION "<Definition>The current depth of unpacked snow in centimeters on
the driving surface.
<DescriptiveName>PrecipitationSensor.roadwaySnowDepth:quantity
<Valid Value Rule>The value 3001 shall indicate an error condition or missing
value.
<Data Concept Type>Data Element
<Unit>centimeters
<Object Identifier> 1.3.6.1.4.1.1206.4.2.5.2.6.14.1.9"
::=   { precipitationSensorEntry 9 }
```

Copy Per MIB Distribution Permission © 2022 AASHTO / ITE / NEMA

5.8.24.10 Roadway Snow Pack Depth

```
precipitationSensorRoadwaySnowPackDepth OBJECT-TYPE
SYNTAX      INTEGER (0..3001)
ACCESS      read-only
STATUS      mandatory
DESCRIPTION "<Definition>The current depth of packed snow in centimeters on
the roadway surface.
<DescriptiveName>PrecipitationSensor.roadwaySnowPackDepth:quantity
<Valid Value Rule>The value 3001 shall indicate an error condition or missing
value.
<Data Concept Type>Data Element
<Unit>centimeters
<Object Identifier> 1.3.6.1.4.1.1206.4.2.5.2.6.14.1.10"
::=   { precipitationSensorEntry 10 }
```

5.8.24.11 Precipitation Indicator

```
precipitationSensorPrecipYesNo OBJECT-TYPE
SYNTAX      INTEGER {   precip (1),
                        noPrecip (2),
                        error (3)}
ACCESS      read-only
STATUS      mandatory
DESCRIPTION "<Definition>Indicates whether or not moisture is detected by the
sensor.
<DescriptiveName>PrecipitationSensor.precipitationIndicator:code
<Valid Value Rule>
precip - Moisture is currently being detected by the precipitation sensor.
0.01 inches of liquid water equivalent is to be detected.
noPrecip - Moisture is not currently being detected by the precipitation
sensor
error - The sensor is either not connected, not reporting, or is indicating
an error
<Data Concept Type>Data Element
<Object Identifier> 1.3.6.1.4.1.1206.4.2.5.2.6.14.1.11"
::=   { precipitationSensorEntry 11 }
```

5.8.24.12 Rainfall or Water Equivalent of Snow

```
precipitationSensorPrecipRate OBJECT-TYPE
SYNTAX      INTEGER (0..65535)
ACCESS      read-only
STATUS      mandatory
DESCRIPTION "<Definition>The rainfall, or water equivalent of snow, rate in
tenths of grams per square meter per second (for rain, this is approximately
to 0.36 mm/hr).
<DescriptiveName>PrecipitationSensor.precipitationRate:quantity
<Valid Value Rule>The value of 65535 shall indicate an error condition or
missing value.
<Data Concept Type>Data Element
<Unit>tenths of grams per square meter per second
<Object Identifier> 1.3.6.1.4.1.1206.4.2.5.2.6.14.1.12"
REFERENCE   "WMO Binary Code Form FM 94 BUFR Table B item 0 13 014."
::=   { precipitationSensorEntry 12 }
```

© 2022 AASHTO / ITE / NEMA Copy Per MIB Distribution Permission

5.8.24.13 Snowfall Accumulation Rate

```
precipitationSensorSnowfallAccumRate OBJECT-TYPE
SYNTAX      INTEGER (0..65535)
ACCESS      read-only
STATUS      mandatory
DESCRIPTION "<Definition>The snowfall accumulation rate in 10^-7 meters per
second (this is equivalent to 0.36 mm/hr).
<DescriptiveName>PrecipitationSensor.snowfallAccumulationRate:quantity
<Valid Value Rule>The value 65535 shall indicate an error condition or
missing value.
<Data Concept Type>Data Element
<Unit>10^-7 meters per second
<Object Identifier> 1.3.6.1.4.1.1206.4.2.5.2.6.14.1.13"
REFERENCE   "WMO Binary Code Form FM 94 BUFR Table B item 0 13 015."
::=   { precipitationSensorEntry 13 }
```

5.8.24.14 Precipitation Situation

```
precipitationSensorPrecipSituation OBJECT-TYPE
SYNTAX      INTEGER {   other (1),
                        unknown (2),
                        noPrecipitation (3),
                        unidentifiedSlight (4),
                        unidentifiedModerate (5),
                        unidentifiedHeavy (6),
                        snowSlight (7),
                        snowModerate (8),
                        snowHeavy (9),
                        rainSlight (10),
                        rainModerate (11),
                        rainHeavy (12),
                        frozenPrecipitationSlight (13),
                        frozenPrecipitationModerate (14),
                        frozenPrecipitationHeavy (15)}
ACCESS      read-only
STATUS      mandatory
DESCRIPTION "<Definition>Describes the weather situation in terms of
precipitation. For automated stations, describes the intensity and
precipitation type as specified in the first row of the
precipitationSensorTable.
<DescriptiveName>PrecipitationSensor.precipitationSituation:code
<Valid Value Rule>
Intensity     Meaning
slight      < 2mm/h water equivalent
moderate    >= 2 and < 8 mm/h water equivalent
heavy       >= 8 mm/h water equivalent If one exists, the corresponding BUFR
value is indicated for staffed (BUFRs) and automated (BUFRa) stations. The
indicated value can be found in the BUFR Table referenced below. Defined
values are:
Range   BUFRa   BUFRs  Meaning
1                      other
2                      unknown
3                      no precipitation
4                      unidentified slight
5                      unidentified moderate
6                      unidentified heavy
```

 © 2022 AASHTO / ITE / NEMA

```
7       171      85    snow slight
8       172      86    snow moderate
9       173      86    snow heavy
10               61    rain slight
11      165      63    rain moderate
12      163      65    rain heavy
13                     frozen precipitation slight
14                     frozen precipitation moderate
15                     frozen precipitation heavy
<Data Concept Type>Data Element
<Object Identifier> 1.3.6.1.4.1.1206.4.2.5.2.6.14.1.14"
REFERENCE   "The values identified in the above table for BUFRa and BUFRs can
be found in WMO Binary Code Form FM 94 BUFR Table B item 0 20 003."
::=   { precipitationSensorEntry 14 }
```

5.8.24.15 Ice Deposit (Thickness)

```
precipitationSensorIceThickness OBJECT-TYPE
SYNTAX      INTEGER (0..65535)
ACCESS      read-only
STATUS      mandatory
DESCRIPTION "<Definition>Indicates the thickness of the ice in millimeters.
<DescriptiveName>PrecipitationSensor.iceDeposit:quantity
<Valid Value Rule>The value 65535 shall indicate an error condition or
missing value.
<Data Concept Type>Data Element
<Unit>millimeters
<Object Identifier> 1.3.6.1.4.1.1206.4.2.5.2.6.14.1.15"
::=   { precipitationSensorEntry 15 }
```

5.8.24.16 Precipitation Start Time

```
precipitationSensorPrecipitationStartTime OBJECT-TYPE
SYNTAX      INTEGER (0..4294967295)
ACCESS      read-only
STATUS      mandatory
DESCRIPTION "<Definition>The time at which the most recent precipitation
event began, measured in seconds since 00:00:00 January 1, 1970 UTC. The
precipitation event begins when 0.01 inches of liquid water equivalent is
detected.
<DescriptiveName>PrecipitationSensor.precipitationStartTime:quantity
<Valid Value Rule>As this standard has been developed long after 1970, a
value of 0 for time should indicate to the management station that the data
received is suspect.
<Data Concept Type>Data Element
<Unit>seconds
<Object Identifier> 1.3.6.1.4.1.1206.4.2.5.2.6.14.1.16"
::=   { precipitationSensorEntry 16 }
```

5.8.24.17 Precipitation End Time

```
precipitationSensorPrecipitationEndTime OBJECT-TYPE
SYNTAX      INTEGER (0..4294967295)
ACCESS      read-only
STATUS      mandatory
```

© 2022 AASHTO / ITE / NEMA Copy Per MIB Distribution Permission

```
DESCRIPTION "<Definition>The time at which the most recently completed
precipitation event ended, measured in seconds since 00:00:00 January 1, 1970
UTC.
<DescriptiveName>PrecipitationSensor.precipitationEndTime:quantity
<Valid Value Rule>As this standard has been developed long after 1970, a
value of 0 for the time should indicate to the management station that the
data received is suspect.
<Data Concept Type>Data Element
<Unit>seconds
<Object Identifier> 1.3.6.1.4.1.1206.4.2.5.2.6.14.1.17"
::=   { precipitationSensorEntry 17 }
```

5.8.24.18 Total Precipitation Past One Hour

```
precipitationSensorPrecipitationOneHour OBJECT-TYPE
SYNTAX      INTEGER (0..65535)
ACCESS      read-only
STATUS      mandatory
DESCRIPTION "<Definition>The total water equivalent precipitation over the
hour preceding the observation in tenths of kilograms per square meter (for
rain, this is approximately tenths of millimeters).
<DescriptiveName>PrecipitationSensor.oneHour:quantity
<Valid Value Rule>The value of 65535 shall indicate an error condition or
missing value.
<Data Concept Type>Data Element
<Unit>tenths of kilograms per square meter
<Object Identifier> 1.3.6.1.4.1.1206.4.2.5.2.6.14.1.18"
REFERENCE   "WMO Binary Code Form FM 94 BUFR Table B item 0 13 019."
::=   { precipitationSensorEntry 18 }
```

5.8.24.19 Total Precipitation Past Three Hours

```
precipitationSensorPrecipitationThreeHours OBJECT-TYPE
SYNTAX      INTEGER (0..65535)
ACCESS      read-only
STATUS      mandatory
DESCRIPTION "<Definition>The total water equivalent precipitation over the
three hours preceding the observation in tenths of kilograms per square meter
(for rain, this is approximately tenths of millimeters).
<DescriptiveName>PrecipitationSensor.threeHours:quantity
<Valid Value Rule>The value of 65535 shall indicate an error condition or
missing value.
<Data Concept Type>Data Element
<Unit>tenths of kilograms per square meter
<Object Identifier> 1.3.6.1.4.1.1206.4.2.5.2.6.14.1.19"
REFERENCE   "WMO Binary Code Form FM 94 BUFR Table B item 0 13 020."
::=   { precipitationSensorEntry 19 }
```

5.8.24.20 Total Precipitation Past Six Hours

```
precipitationSensorPrecipitationSixHours OBJECT-TYPE
SYNTAX      INTEGER (0..65535)
ACCESS      read-only
STATUS      mandatory
```

 © 2022 AASHTO / ITE / NEMA

```
DESCRIPTION "<Definition>The total water equivalent precipitation over the
six hours preceding the observation in tenths of kilograms per square meter
(for rain, this is approximately tenths of millimeters).
<DescriptiveName>PrecipitationSensor.sixHours:quantity
<Valid Value Rule>The value of 65535 shall indicate an error condition or
missing value.
<Data Concept Type>Data Element
<Unit>tenths of kilograms per square meter
<Object Identifier> 1.3.6.1.4.1.1206.4.2.5.2.6.14.1.20"
REFERENCE   "WMO Binary Code Form FM 94 BUFR Table B item 0 13 021."
::=   { precipitationSensorEntry 20 }
```

5.8.24.21 Total Precipitation Past Twelve Hours

```
precipitationSensorPrecipitationTwelveHours OBJECT-TYPE
SYNTAX      INTEGER (0..65535)
ACCESS      read-only
STATUS      mandatory
DESCRIPTION "<Definition>The total water equivalent precipitation over the
twelve hours preceding the observation in tenths of kilograms per square
meter (for rain, this is approximately to tenths of millimeters).
<DescriptiveName>PrecipitationSensor.twelveHours:quantity
<Valid Value Rule>The value of 65535 shall indicate an error condition or
missing value.
<Data Concept Type>Data Element
<Unit>tenths of kilograms per square meter
<Object Identifier> 1.3.6.1.4.1.1206.4.2.5.2.6.14.1.21"
REFERENCE   "WMO Binary Code Form FM 94 BUFR Table B item 0 13 022."
::=   { precipitationSensorEntry 21 }
```

5.8.24.22 Total Precipitation Past Twenty-Four Hours

```
precipitationSensorPrecipitation24Hours OBJECT-TYPE
SYNTAX      INTEGER (0..65535)
ACCESS      read-only
STATUS      mandatory
DESCRIPTION "<Definition>The total water equivalent precipitation over the
twenty-four hours preceding the observation in tenths of kilograms per square
meter (for rain, this is equivalent to tenths of millimeters).
<DescriptiveName>PrecipitationSensor.24Hours:quantity
<Valid Value Rule>The value of 65535 shall indicate an error condition or
missing value.
<Data Concept Type>Data Element
<Unit>tenths of kilograms per square meter
<Object Identifier> 1.3.6.1.4.1.1206.4.2.5.2.6.14.1.22"
REFERENCE   "WMO Binary Code Form FM 94 BUFR Table B item 0 13 023."
::=   { precipitationSensorEntry 22 }
```

5.8.24.23 Total Precipitation User Defined Period

```
precipitationSensorPrecipitationUserDefined OBJECT-TYPE
SYNTAX      INTEGER (0..65535)
ACCESS      read-only
STATUS      mandatory
DESCRIPTION "<Definition>The total water equivalent precipitation over the
precipitationSensorPeriod, in seconds, preceding the observation in tenths of
```

© 2022 AASHTO / ITE / NEMA Copy Per MIB Distribution Permission

```
kilograms per square meter (for rain, this is equivalent to tenths of
millimeters).
<DescriptiveName>PrecipitationSensor.UserDefined:quantity
<Valid Value Rule>The value of 65535 shall indicate an error condition or
missing value.
<Data Concept Type>Data Element
<Unit>tenths of kilograms per square meter
<Object Identifier> 1.3.6.1.4.1.1206.4.2.5.2.6.14.1.23"
::=   { precipitationSensorEntry 23 }
```

5.8.25 Number of Humidity Sensors

```
humiditySensorTableNumSensors OBJECT-TYPE
SYNTAX      INTEGER (0..255)
ACCESS      read-only
STATUS      mandatory
DESCRIPTION "<Definition>Indicates the number of entries in the humidity
sensor table.
<Informative>This value may automatically change upon connecting or
disconnecting a sensor; however, the table is still defined as a static table
since the creation/deletion of rows is not managed through SNMP logic.
<DescriptiveName>HumiditySensorTable.numSensors:quantity
<Data Concept Type>Data Element
<Unit>count
<Object Identifier> 1.3.6.1.4.1.1206.4.2.5.2.6.15"
::=   { essNtcipPrecip 15 }
```

5.8.26 Humidity Sensor Table

```
humiditySensorTable OBJECT-TYPE
SYNTAX      SEQUENCE OF HumiditySensorEntry
ACCESS      not-accessible
STATUS      mandatory
DESCRIPTION "<Definition>Table containing the humidity sensor data.
<DescriptiveName>HumiditySensorTable
<Data Concept Type>Class
<TableType> static
<Object Identifier> 1.3.6.1.4.1.1206.4.2.5.2.6.16"
::=   { essNtcipPrecip 16 }
```

5.8.27 Humidity Sensor

```
humiditySensorEntry OBJECT-TYPE
SYNTAX      HumiditySensorEntry
ACCESS      not-accessible
STATUS      mandatory
DESCRIPTION "<Definition>A humidity sensor is a sensor that reports the
relative humidity. It can be described through a number of attributes as
indicated by the following subclauses.
<DescriptiveName>HumiditySensor
<Data Concept Type>Class"
INDEX { humiditySensorIndex }
::=   { humiditySensorTable 1 }

HumiditySensorEntry ::= SEQUENCE {
      humiditySensorIndex                INTEGER,
```

 © 2022 AASHTO / ITE / NEMA

```
      humiditySensorHeight                INTEGER,
      humiditySensorLatitude              INTEGER,
      humiditySensorLongitude             INTEGER,
      humiditySensorLocation        DisplayString,
      humiditySensorModelInformation      INTEGER,
      -- SENSOR READINGS
      humiditySensorRelativeHumidity      INTEGER,
      humiditySensorTemperatureInformation      INTEGER,
      humiditySensorWetbulbTemp           INTEGER,
      humiditySensorDewpointTemp          INTEGER}
```

5.8.27.1 Humidity Sensor Index

```
humiditySensorIndex OBJECT-TYPE
SYNTAX      INTEGER (1..255)
ACCESS      read-only
STATUS      mandatory
DESCRIPTION "<Definition>Enumerated list of row entries that provide humidity
sensor data.
<DescriptiveName>HumiditySensor.index:identifier
<Data Concept Type>Data Element
<Object Identifier> 1.3.6.1.4.1.1206.4.2.5.2.6.16.1.1"
::= { humiditySensorEntry 1 }
```

5.8.27.2 Humidity Sensor Height

```
humiditySensorHeight OBJECT-TYPE
SYNTAX      INTEGER (-1000..1001)
ACCESS      read-write
STATUS      mandatory
DESCRIPTION "<Definition>The height of the humidity sensor with respect to
the essReferenceHeight in meters.
<DescriptiveName>HumiditySensor.height:quantity
<Valid Value Rule>The value of 1001 shall indicate a missing value.
<Data Concept Type>Data Element
<Unit>meters
<Object Identifier> 1.3.6.1.4.1.1206.4.2.5.2.6.16.1.2"
REFERENCE   "essReferenceHeight plus this value equals the WMO Binary Code
Form FM 94 BUFR Table B item 0 07 001."
::=   { humiditySensorEntry 2 }
```

5.8.27.3 Humidity Sensor Latitude

```
humiditySensorLatitude OBJECT-TYPE
SYNTAX      INTEGER (-90000000..90000001)
ACCESS      read-write
STATUS      mandatory
DESCRIPTION "<Definition>The latitude in 10^-6 degrees of the ESS humidity
sensor, per WGS-84 datum.
<DescriptiveName>HumiditySensor.latitude:quantity
<Valid Value Rule>The humiditySensorLatitude at the North Pole is 90,000,000.
The humiditySensorLatitude at the South Pole is -90,000,000. The value
90,000,001 shall indicate a missing value.
<Data Concept Type>Data Element
<Unit>latitude
<Object Identifier> 1.3.6.1.4.1.1206.4.2.5.2.6.16.1.3"
```

© 2022 AASHTO / ITE / NEMA Copy Per MIB Distribution Permission

```
REFERENCE   "Resolution based on on-going location referencing activities;
the WMO Binary Code Form FM 94 BUFR Table B item 0 05 001 can be obtained by
dividing this value by 10."
::=   { humiditySensorEntry 3 }
```

5.8.27.4 Humidity Sensor Longitude

```
humiditySensorLongitude OBJECT-TYPE
SYNTAX      INTEGER (-180000000..180000001)
ACCESS      read-write
STATUS      mandatory
DESCRIPTION "<Definition>The east longitude in 10^-6 degrees from the Prime
Meridian of the ESS humidity sensor location.
<DescriptiveName>HumiditySensor.longitude:quantity
<Valid Value Rule>The humiditySensorLongitude of 180 degrees West shall be -
180,000,000. The humiditySensorLongitude of 180 degrees East shall be
180,000,000. The value 180,000,001 shall indicate a missing value.
<Data Concept Type>Data Element
<Unit>longitude
<Object Identifier> 1.3.6.1.4.1.1206.4.2.5.2.6.16.1.4"
REFERENCE   "Resolution based on on-going location referencing activities;
the WMO Binary Code Form FM 94 BUFR Table B item 0 06 001 can be obtained by
dividing this value by 10."
::=   { humiditySensorEntry 4 }
```

5.8.27.5 Humidity Sensor Location

```
humiditySensorLocation OBJECT-TYPE
SYNTAX      DisplayString (SIZE (0..255))
ACCESS      read-write
STATUS      mandatory
DESCRIPTION "<Definition>A textual string indicating the location of the
humidity sensor.
<DescriptiveName>HumiditySensor.location:text
<Data Concept Type>Data Element
<Object Identifier> 1.3.6.1.4.1.1206.4.2.5.2.6.16.1.5"
::= { humiditySensorEntry 5 }
```

5.8.27.6 Humidity Sensor Model Information

```
humiditySensorModelInformation OBJECT-TYPE
SYNTAX      INTEGER (0..255)
ACCESS      read-write
STATUS      mandatory
DESCRIPTION "<Definition>Indicates the row in the Module Table (See NTCIP
1201) that contains information about the make, model, and version number of
the sensor associated with this row of the Humidity Sensor Table.
<DescriptiveName>HumiditySensor.modelInformation:identifier
<Valid Value Rule>
The value of zero indicates that this information is not available.
<Data Concept Type>Data Element
<Object Identifier> 1.3.6.1.4.1.1206.4.2.5.2.6.16.1.6"
::= { humiditySensorEntry 6 }
```

Copy Per MIB Distribution Permission © 2022 AASHTO / ITE / NEMA

5.8.27.7 Relative Humidity

```
humiditySensorRelativeHumidity OBJECT-TYPE
SYNTAX      INTEGER (0..101)
ACCESS      read-only
STATUS      mandatory
DESCRIPTION "<Definition>The relative humidity in percent.
<DescriptiveName>HumiditySensor.relativeHumidity:quantity
<Valid Value Rule>The value of 101 shall indicate an error condition or
missing value.
<Data Concept Type>Data Element
<Unit>percent humidity
<Object Identifier> 1.3.6.1.4.1.1206.4.2.5.2.6.16.1.7"
REFERENCE   "WMO Binary Code Form FM 94 BUFR Table B item 0 13 003."
::=   { humiditySensorEntry 7 }
```

5.8.27.8 Humidity Sensor Temperature Information

```
humiditySensorTemperatureInformation OBJECT-TYPE
SYNTAX      INTEGER (0..255)
ACCESS      read-write
STATUS      mandatory
DESCRIPTION "<Definition>Indicates the row in the essTemperatureSensorTable
that contains the temperature associated with this row of the Humidity Sensor
Table.
<DescriptiveName>HumiditySensor.TemperatureInformation:identifier
<Valid Value Rule>The value of zero indicates that this information is not
available.
<Data Concept Type>Data Element
<Object Identifier> 1.3.6.1.4.1.1206.4.2.5.2.6.16.1.8"
DEFVAL {1}
::= { humiditySensorEntry 8 }
```

5.8.27.9 Wetbulb Temperature

```
humiditySensorWetbulbTemp OBJECT-TYPE
SYNTAX      INTEGER (-1000..1001)
ACCESS      read-only
STATUS      mandatory
DESCRIPTION "<Definition>The wet-bulb temperature in tenths of degrees
Celsius for the row of the essTemperatureSensorTable as specified by
humiditySensorTemperatureInformation for this humidity sensor. The
temperature is an instantaneous reading.
<DescriptiveName>HumiditySensor.wetBulbTemp:quantity
<Valid Value Rule>The value 1001 shall indicate an error condition or missing
value.
<Data Concept Type>Data Element
<Unit>tenths of degrees Celsius
<Object Identifier> 1.3.6.1.4.1.1206.4.2.5.2.6.16.1.9"
REFERENCE   "is based on WMO Binary Code Form FM 94 BUFR Table B item 0 12
002; temperature in Kelvin is determined by adding 273.15 to this value."
::=   { humiditySensorEntry 9 }
```

5.8.27.10 Dewpoint Temperature

```
humiditySensorDewpointTemp OBJECT-TYPE
SYNTAX      INTEGER (-1000..1001)
ACCESS      read-only
```

© 2022 AASHTO / ITE / NEMA Copy Per MIB Distribution Permission

```
STATUS      mandatory
DESCRIPTION "<Definition>The dewpoint temperature in tenths of degrees
Celsius for the row of the essTemperatureSensorTable as specified by
humiditySensorTemperatureInformation. The temperature is an instantaneous
reading.
<DescriptiveName>HumiditySensor.dewpoint:quantity
<Valid Value Rule>The value 1001 shall indicate an error condition or missing
value.
<Data Concept Type>Data Element
<Unit>tenths of degrees Celsius
<Object Identifier> 1.3.6.1.4.1.1206.4.2.5.2.6.16.1.10"
REFERENCE   "Resolution is based on WMO Binary Code Form FM 94 BUFR Table B
item 0 12 003; temperature in Kelvin is determined by adding 273.15 to this
value."
::=   { humiditySensorEntry 10 }
```

5.9 Radiation Objects

```
-- Contains objects used to describe the data that is collected by the
-- pavement surface sensor.
essBufrRadiation  OBJECT IDENTIFIER ::= {essBufr 14 }
essNtcipRadiation  OBJECT IDENTIFIER ::= {essNtcip 7}
```

5.9.1 Solar Radiation

```
-- This object has been deprecated. See Annex D.1.5 for more information.
essSolarRadiation OBJECT-TYPE
SYNTAX      INTEGER (0..65535)
ACCESS      read-only
STATUS      deprecated
DESCRIPTION "<Definition>The direct solar radiation integrated over the 24
hours preceding the observation in Joules per square meter. The value of
65535 shall indicate a missing value.
<DescriptiveName>RadiationSensor.solarRadiation:quantity
<Data Concept Type>Data Element
<Unit>Joules per square meter
<Object Identifier> 1.3.6.1.4.1.1206.4.2.5.1.14.24"
REFERENCE   "WMO Code Form FM 94 BUFR Table B item 0 14 024."
::=   { essBufrRadiation 24 }
```

5.9.2 Total Sun

```
-- This object has been deprecated. See Annex D.3.3.4 for more information.
essTotalSun OBJECT-TYPE
SYNTAX      INTEGER (0..1441)
ACCESS      read-only
STATUS      deprecated
DESCRIPTION "<Definition>The total amount of sunshine in minutes over the 24
hour period preceding the observation.
<DescriptiveName>RadiationSensor.totalSun:quantity
<Valid Value Rule>The value of 1441 shall indicate a missing value.
<Data Concept Type>Data Element
<Unit>minutes
<Object Identifier> 1.3.6.1.4.1.1206.4.2.5.1.14.31"
REFERENCE   "WMO Code Form FM 94 BUFR Table B item 0 14 031."
::=   { essBufrRadiation 31 }
```

Copy Per MIB Distribution Permission © 2022 AASHTO / ITE / NEMA

5.9.3 Cloud Cover Situation

```
-- This object has been deprecated. See Annex D.3.7 for more information.
essCloudSituation OBJECT-TYPE
SYNTAX      INTEGER {   overcast (1),
                        cloudy (2),
                        partlyCloudy (3),
                        mostlyClear (4),
                        clear (5)}
ACCESS      read-only
STATUS      deprecated
DESCRIPTION "<Definition>Describes the amount of cloud cover. The associated
percentages of cloud cover are indicated to identify the differences between
the defined values.
<DescriptiveName>RadiationSensor.cloudCoverSituation:code
<Valid Value Rule>Defined values are:
Range  BUFRs  BUFRa   Meaning
1                    other visibility anomaly
2                    unknown
3      0     100     clear
4      44    130     Fog - not patchy
5      41    131     Patchy fog
6      36    127     Blowing snow
7      04    104     Smoke
8      07    207     Sea Spray
9                    Vehicle Spray
10     31    127     Blowing dust or sand
11                   sun glare
12                   Swarms of insects
<Data Concept Type>Data Element
<Object Identifier> 1.3.6.1.4.1.1206.4.2.5.2.7.1"
::=   { essNtcipRadiation 1 }
```

5.9.4 Terrestrial Radiation

```
-- This object has been deprecated. See Annex D.3.3.4 for more information.
essInstantaneousTerrestrialRadiation OBJECT-TYPE
SYNTAX      INTEGER (-2048..2049)
ACCESS      read-only
STATUS      deprecated
DESCRIPTION "<Definition>The instantaneous infrared (wavelength of 3.5 - 50
micrometers) radiation being emitted from the atmosphere in watts per square
meter.
<DescriptiveName>RadiationSensor.instantaneousTerrestrialRadiation:quantity
<Valid Value Rule>The value of 2049 shall indicate a missing value.
<Data Concept Type>Data Element
<Unit>watts per square meter
<Object Identifier> 1.3.6.1.4.1.1206.4.2.5.1.14.17"
REFERENCE   "WMO Code Form FM 94 BUFR Table B item 0 14 017"
::=   { essBufrRadiation 17 }
```

5.9.5 Solar Radiation—Version 2

```
-- This object has been deprecated. See Annex D.3.3.4 for more information.
essInstantaneousSolarRadiation OBJECT-TYPE
```

© 2022 AASHTO / ITE / NEMA Copy Per MIB Distribution Permission

```
SYNTAX      INTEGER (-2048..2049)
ACCESS      read-only
STATUS      deprecated
DESCRIPTION "<Definition>The instantaneous ultraviolet, visible, and near-
infrared (wavelength of less than 3.0 micrometers) radiation hitting the
earth's surface in watts per square meter.
<DescriptiveName>RadiationSensor.instantaneousSolarRadiation:quantity
<Valid Value Rule>The value of 2049 shall indicate a missing value.
<Data Concept Type>Data Element
<Unit>watts per square meter
<Object Identifier> 1.3.6.1.4.1.1206.4.2.5.1.14.18"
REFERENCE   "WMO Code Form FM 94 BUFR Table B item 0 14 018"
::=   { essBufrRadiation 18 }
```

5.9.6 Total Radiation

```
-- This object has been deprecated. See Annex D.3.3.4 for more information.
essTotalRadiation OBJECT-TYPE
SYNTAX      INTEGER (-2048..2049)
ACCESS      read-only
STATUS      deprecated
DESCRIPTION "<Definition>The average total radiation hitting the earth's
surface in watts per square meter during the radiation period.
<DescriptiveName>RadiationSensor.totalRadiation:quantity
<Valid Value Rule>The value of 2049 shall indicate a missing value.
<Data Concept Type>Data Element
<Unit>Joules per square meter
<Object Identifier> 1.3.6.1.4.1.1206.4.2.5.1.14.25"
REFERENCE   "WMO Code Form FM 94 BUFR Table B item 0 14 025"
::=   { essBufrRadiation 25 }
```

5.9.7 Total Radiation Period

```
essTotalRadiationPeriod OBJECT-TYPE
SYNTAX      INTEGER (0..86400)
ACCESS      read-only
STATUS      mandatory
DESCRIPTION "<Definition>The rolling period, in seconds, that corresponds to
the length of time the essTotalRadiation is averaged.
<DescriptiveName>RadiationSensorTable.totalRadiationPeriod:quantity
<Data Concept Type>Data Element
<Unit>seconds
<Object Identifier> 1.3.6.1.4.1.1206.4.2.5.2.7.2"
::=   { essNtcipRadiation 2 }
```

5.9.8 Number of Radiation Sensors

```
radiationSensorTableNumSensors OBJECT-TYPE
SYNTAX      INTEGER (0..255)
ACCESS      read-only
STATUS      mandatory
DESCRIPTION "<Definition>Indicates the number of entries in the radiation
sensor table.
<Informative>This value may automatically change upon connecting or
disconnecting a sensor; however, the table is still defined as a static table
since the creation/deletion of rows is not managed through SNMP logic.
```

 © 2022 AASHTO / ITE / NEMA

```
<DescriptiveName>RadiationSensorTable.numSensors:quantity
<Data Concept Type>Data Element
<Unit>count
<Object Identifier> 1.3.6.1.4.1.1206.4.2.5.2.7.3"
::=   { essNtcipRadiation 3 }
```

5.9.9 Radiation Sensor Table

```
radiationSensorTable OBJECT-TYPE
SYNTAX      SEQUENCE OF RadiationSensorEntry
ACCESS      not-accessible
STATUS      mandatory
DESCRIPTION "<Definition>Table containing the radiation sensor data.
<DescriptiveName>RadiationSensorTable
<Data Concept Type>Class
<TableType> static
<Object Identifier> 1.3.6.1.4.1.1206.4.2.5.2.7.4"
::=   { essNtcipRadiation 4 }
```

5.9.10 Radiation Sensor

```
radiationSensorEntry OBJECT-TYPE
SYNTAX      RadiationSensorEntry
ACCESS      not-accessible
STATUS      mandatory
DESCRIPTION "<Definition>A radiation sensor is a sensor that reports the
amount of radiation detected. It can be described through a number of
attributes as indicated by the following subclauses.
<DescriptiveName>RadiationSensor
<Data Concept Type>Class"
INDEX { radiationSensorIndex }
::=   { radiationSensorTable 1 }

RadiationSensorEntry ::= SEQUENCE {
      radiationSensorIndex                INTEGER,
      radiationSensorHeight               INTEGER,
      radiationSensorLatitude             INTEGER,
      radiationSensorLongitude            INTEGER,
      radiationSensorLocation             DisplayString,
      radiationSensorModelInformation     INTEGER,
      -- SENSOR READINGS
      essTotalSunV4                       INTEGER,
      essInstantaneousTerrestrialRadiationV4    INTEGER,
      essInstantaneousSolarRadiationV4    INTEGER,
      essTotalRadiationV4                 INTEGER}
```

5.9.10.1 Radiation Sensor Index

```
radiationSensorIndex OBJECT-TYPE
SYNTAX      INTEGER (1..255)
ACCESS      read-only
STATUS      mandatory
DESCRIPTION "<Definition>Enumerated list of row entries that provide
radiation sensor data.
<DescriptiveName>RadiationSensor.index:identifier
<Data Concept Type>Data Element
```

© 2022 AASHTO / ITE / NEMA

```
<Object Identifier> 1.3.6.1.4.1.1206.4.2.5.2.7.4.1.1"
::= { radiationSensorEntry 1 }
```

5.9.10.2 Radiation Sensor Height

```
radiationSensorHeight OBJECT-TYPE
SYNTAX      INTEGER (-1000..1001)
ACCESS      read-write
STATUS      mandatory
DESCRIPTION "<Definition>The height of the radiation sensor with respect to
the essReferenceHeight in meters.
<DescriptiveName>RadiationSensor.height:quantity
<Valid Value Rule>The value of 1001 shall indicate a missing value.
<Data Concept Type>Data Element
<Unit>meters
<Object Identifier> 1.3.6.1.4.1.1206.4.2.5.2.7.4.1.2"
REFERENCE   "essReferenceHeight plus this value equals the WMO Binary Code
Form FM 94 BUFR Table B item 0 07 001."
::=   { radiationSensorEntry 2 }
```

5.9.10.3 Radiation Sensor Latitude

```
radiationSensorLatitude OBJECT-TYPE
SYNTAX      INTEGER (-90000000..90000001)
ACCESS      read-write
STATUS      mandatory
DESCRIPTION "<Definition>The latitude in 10^-6 degrees of the ESS radiation
sensor, per WGS-84 datum.
<DescriptiveName>RadiationSensor.latitude:quantity
<Valid Value Rule>The radiationSensorLatitude at the North Pole is
90,000,000. The radiationSensorLatitude at the South Pole is -90,000,000. The
value 90,000,001 shall indicate a missing value.
<Data Concept Type>Data Element
<Unit>latitude
<Object Identifier> 1.3.6.1.4.1.1206.4.2.5.2.7.4.1.3"
REFERENCE   "Resolution based on on-going location referencing activities;
the WMO Binary Code Form FM 94 BUFR Table B item 0 05 001 can be obtained by
dividing this value by 10."
::=   { radiationSensorEntry 3 }
```

5.9.10.4 Radiation Sensor Longitude

```
radiationSensorLongitude OBJECT-TYPE
SYNTAX      INTEGER (-180000000..180000001)
ACCESS      read-write
STATUS      mandatory
DESCRIPTION "<Definition>The east longitude in 10^-6 degrees from the Prime
Meridian of the ESS radiation sensor location.
<DescriptiveName>RadiationSensor.longitude:quantity
<Valid Value Rule>The radiationSensorLongitude of 180 degrees West shall be -
180,000,000. The radiationSensorLongitude of 180 degrees East shall be
180,000,000. The value 180,000,001 shall indicate a missing value.
<Data Concept Type>Data Element
<Unit>longitude
<Object Identifier> 1.3.6.1.4.1.1206.4.2.5.2.7.4.1.4"
```

 © 2022 AASHTO / ITE / NEMA

```
REFERENCE   "Resolution based on on-going location referencing activities;
the WMO Binary Code Form FM 94 BUFR Table B item 0 06 001 can be obtained by
dividing this value by 10."
::=   { radiationSensorEntry 4 }
```

5.9.10.5 Radiation Sensor Location

```
radiationSensorLocation OBJECT-TYPE
SYNTAX      DisplayString (SIZE (0..255))
ACCESS      read-write
STATUS      mandatory
DESCRIPTION "<Definition>A textual string indicating the location of the
radiation sensor.
<DescriptiveName>RadiationSensor.location:text
<Data Concept Type>Data Element
<Object Identifier> 1.3.6.1.4.1.1206.4.2.5.2.7.4.1.5"
::= { radiationSensorEntry 5 }
```

5.9.10.6 Radiation Sensor Model Information

```
radiationSensorModelInformation OBJECT-TYPE
SYNTAX      INTEGER (0..255)
ACCESS      read-write
STATUS      mandatory
DESCRIPTION "<Definition>Indicates the row in the Module Table (See NTCIP
1201) that contains information about the make, model, and version number of
the sensor associated with this row of the Radiation Sensor Table.
<DescriptiveName>RadiationSensor.modelInformation:identifier
<Valid Value Rule>The value of zero indicates that this information is not
available.
<Data Concept Type>Data Element
<Object Identifier> 1.3.6.1.4.1.1206.4.2.5.2.7.4.1.6"
::= { radiationSensorEntry 6 }
```

5.9.10.7 Total Sun V4

```
essTotalSunV4 OBJECT-TYPE
SYNTAX      INTEGER (0..1441)
ACCESS      read-only
STATUS      mandatory
DESCRIPTION "<Definition>The total amount of sunshine in minutes over the 24
hour period preceding the observation.
<DescriptiveName>RadiationSensor.totalSun:quantity
<Valid Value Rule>The value of 1441 shall indicate a missing value.
<Data Concept Type>Data Element
<Unit>minutes
<Object Identifier> 1.3.6.1.4.1.1206.4.2.5.2.7.4.1.7"
REFERENCE   "WMO Code Form FM 94 BUFR Table B item 0 14 031."
::=   { radiationSensorEntry 7 }
```

5.9.10.8 Terrestrial Radiation V4

```
essInstantaneousTerrestrialRadiationV4 OBJECT-TYPE
SYNTAX      INTEGER (-2048..2049)
ACCESS      read-only
STATUS      mandatory
```

© 2022 AASHTO / ITE / NEMA Copy Per MIB Distribution Permission

```
DESCRIPTION "<Definition>The instantaneous infrared (wavelength of 3.5 - 50
micrometers) radiation being emitted from the atmosphere in watts per square
meter.
<DescriptiveName>RadiationSensor.instantaneousTerrestrialRadiation:quantity
<Valid Value Rule>The value of 2049 shall indicate a missing value.
<Data Concept Type>Data Element
<Unit>watts per square meter
<Object Identifier> 1.3.6.1.4.1.1206.4.2.5.2.7.4.1.8"
REFERENCE   "WMO Code Form FM 94 BUFR Table B item 0 14 017"
::=   { radiationSensorEntry 8 }
```

5.9.10.9 Solar Radiation Version 4

```
essInstantaneousSolarRadiationV4 OBJECT-TYPE
SYNTAX      INTEGER (-2048..2049)
ACCESS      read-only
STATUS      mandatory
DESCRIPTION "<Definition>The instantaneous ultraviolet, visible, and near-
infrared (wavelength of less than 3.0 micrometers) radiation hitting the
earth's surface in watts per square meter.
<DescriptiveName>RadiationSensor.instantaneousSolarRadiation:quantity
<Valid Value Rule>The value of 2049 shall indicate a missing value.
<Data Concept Type>Data Element
<Unit>watts per square meter
<Object Identifier> 1.3.6.1.4.1.1206.4.2.5.2.7.4.1.9"
REFERENCE   "WMO Code Form FM 94 BUFR Table B item 0 14 018"
::=   { radiationSensorEntry 9 }
```

5.9.10.10 Total Radiation V4

```
essTotalRadiationV4 OBJECT-TYPE
SYNTAX      INTEGER (-2048..2049)
ACCESS      read-only
STATUS      mandatory
DESCRIPTION "<Definition>The average total radiation hitting the earth's
surface in watts per square meter during the radiation period.
<DescriptiveName>RadiationSensor.totalRadiation:quantity
<Valid Value Rule>The value of 2049 shall indicate a missing value.
<Data Concept Type>Data Element
<Unit>Joules per square meter
<Object Identifier> 1.3.6.1.4.1.1206.4.2.5.2.7.4.1.10"
REFERENCE   "WMO Code Form FM 94 BUFR Table B item 0 14 025"
::=   { radiationSensorEntry 10 }
```

5.9.11 Cloud Cover Situation V4

```
essCloudSituationV4 OBJECT-TYPE
SYNTAX      INTEGER (0..8)
ACCESS      read-only
STATUS      mandatory
DESCRIPTION "<Definition>Describes the amount of cloud cover in the sky,
measured in oktas, as defined in WMO code table 2700.
<DescriptiveName>RadiationSensorTable.cloudCoverSituationV4:code
<Valid Value Rule>Defined values are:
Oktas Category    Definition
0     Fine        Sky clear
```

 © 2022 AASHTO / ITE / NEMA

```
1     Fine        1/8 of sky covered or less, but not zero
2     Fine        2/8 of sky covered
3     Partly Cloudy     3/8 of sky covered
4     Partly Cloudy     4/8 of sky covered
5     Partly Cloudy     5/8 of sky covered
6     Cloudy            6/8 of sky covered
7     Cloudy            7/8 of sky covered or more, but not 8/8
8     Overcast          8/8 of sky completely covered, no breaks
<Data Concept Type>Data Element
<Object Identifier> 1.3.6.1.4.1.1206.4.2.5.2.7.5"
::=   { essNtcipRadiation 5 }
```

5.10 Visibility Data Objects

```
-- Contains objects used to describe the visibility data that is
-- collected by the ess.
essNtcipVisibility  OBJECT IDENTIFIER ::= {essNtcip 8 }
```

5.10.1 Visibility

```
essVisibility OBJECT-TYPE
SYNTAX      INTEGER (0..1000001)
ACCESS      read-only
STATUS      deprecated
DESCRIPTION "<Definition>Surface visibility measured in one tenth of a meter.
<DescriptiveName>VisibilitySensor.visibility:quantity
<Valid Value Rule>The value 1000001 shall indicate an error condition or
missing value.
<Data Concept Type>Data Element
<Unit>one tenth of a meter
<Object Identifier> 1.3.6.1.4.1.1206.4.2.5.2.8.1"
REFERENCE   "The value for WMO Code Form FM 94 BUFR Table B item 0 20 001 is
given by this value divided by 100."
::=   { essNtcipVisibility 1 }
```

5.10.2 Visibility Situation

```
essVisibilitySituation OBJECT-TYPE
SYNTAX      INTEGER {   other (1),
                        unknown (2),
                        clear (3),
                        fogNotPatchy (4),
                        patchyFog (5),
                        blowingSnow (6),
                        smoke (7),
                        seaSpray (8),
                        vehicleSpray (9),
                        blowingDustOrSand (10),
                        sunGlare (11),
                        swarmsOfInsects (12)}
ACCESS      read-only
STATUS      mandatory
DESCRIPTION "<Definition>Describes the travel environment in terms of
visibility. If one exists, the corresponding BUFR value is indicated for
staffed (BUFRs) and automated (BUFRa) stations. The indicated value can be
found in the BUFR Table referenced below.
```

© 2022 AASHTO / ITE / NEMA Copy Per MIB Distribution Permission

```
<DescriptiveName>VisibilitySensor.visibilitySituation:code
<Valid Value Rule>
Range       BUFRs       BUFRa       Meaning
      1                               other visibility anomaly
      2                               unknown
      3           0           100     clear
      4           44          130     Fog - not patchy
      5           41          131     Patchy fog
      6           36          127     Blowing snow
      7           04          104     Smoke
      8           07          207     Sea Spray
      9                               Vehicle Spray
      10          31          127     Blowing dust or sand
      11                              sun glare
      12                              Swarms of insects
<Data Concept Type>Data Element
<Object Identifier> 1.3.6.1.4.1.1206.4.2.5.2.8.3"
REFERENCE   "The values identified in the above table for BUFRa and BUFRs can
be found in WMO Code Form FM 94 BUFR Table B item 0 20 003."
::=   { essNtcipVisibility 3 }
```

5.10.3 Visibility Sensor Height

```
visibilitySensorHeight OBJECT-TYPE
SYNTAX      INTEGER (-1000..1001)
ACCESS      read-write
STATUS      mandatory
DESCRIPTION "<Definition>The height of the visibility sensor with respect to
the essReferenceHeight in meters.
<DescriptiveName>VisibilitySensor.height:quantity
<Valid Value Rule>The value of 1001 shall indicate a missing value.
<Data Concept Type>Data Element
<Unit>meters
<Object Identifier> 1.3.6.1.4.1.1206.4.2.5.2.8.4"
REFERENCE   "essReferenceHeight plus this value equals the WMO Binary Code
Form FM 94 BUFR Table B item 0 07 001."
::=   { essNtcipVisibility 4 }
```

5.10.4 Visibility Sensor Latitude

```
visibilitySensorLatitude OBJECT-TYPE
SYNTAX      INTEGER (-90000000..90000001)
ACCESS      read-write
STATUS      mandatory
DESCRIPTION "<Definition>The latitude in 10^-6 degrees of the ESS visibility
sensor, per WGS-84 datum.
<DescriptiveName>VisibilitySensor.latitude:quantity
<Valid Value Rule>The visibilitySensorLatitude at the North Pole is
90,000,000. The visibilitySensorLatitude at the South Pole is -90,000,000.
The value 90,000,001 shall indicate a missing value.
<Data Concept Type>Data Element
<Unit>latitude
<Object Identifier> 1.3.6.1.4.1.1206.4.2.5.2.8.5"
REFERENCE   "Resolution based on on-going location referencing activities;
the WMO Binary Code Form FM 94 BUFR Table B item 0 05 001 can be obtained by
dividing this value by 10."
::=   { essNtcipVisibility 5 }
```

 © 2022 AASHTO / ITE / NEMA

5.10.5 Visibility Sensor Longitude

```
visibilitySensorLongitude OBJECT-TYPE
SYNTAX      INTEGER (-180000000..180000001)
ACCESS      read-write
STATUS      mandatory
DESCRIPTION "<Definition>The east longitude in 10^-6 degrees from the Prime
Meridian of the ESS visibility sensor location.
<DescriptiveName>VisibilitySensor.longitude:quantity
<Valid Value Rule>The visibilitySensorLongitude of 180 degrees West shall be
-180,000,000. The visibilitySensorLongitude of 180 degrees East shall be
180,000,000. The value 180,000,001 shall indicate a missing value.
<Data Concept Type>Data Element
<Unit>longitude
<Object Identifier> 1.3.6.1.4.1.1206.4.2.5.2.8.6"
REFERENCE   "Resolution based on on-going location referencing activities;
the WMO Binary Code Form FM 94 BUFR Table B item 0 06 001 can be obtained by
dividing this value by 10."
::=   { essNtcipVisibility 6 }
```

5.10.6 Visibility Sensor Location

```
visibilitySensorLocation OBJECT-TYPE
SYNTAX      DisplayString (SIZE (0..255))
ACCESS      read-write
STATUS      mandatory
DESCRIPTION "<Definition>A textual string indicating the location of the
visibility sensor.
<DescriptiveName>VisibilitySensor.location:text
<Data Concept Type>Data Element
<Object Identifier> 1.3.6.1.4.1.1206.4.2.5.2.8.7"
::= { essNtcipVisibility 7 }
```

5.10.7 Visibility Sensor Model Information

```
visibilitySensorModelInformation OBJECT-TYPE
SYNTAX      INTEGER (0..255)
ACCESS      read-write
STATUS      mandatory
DESCRIPTION "<Definition>Indicates the row in the Module Table (See NTCIP
1201) that contains information about the make, model, and version number of
the visibility sensor. If there is more than one visibility sensor, the row
indicates the information for the primary visibility sensor.
<DescriptiveName>VisibilitySensor.modelInformation:identifier
<Valid Value Rule>The value of zero indicates that this information is not
available.
<Data Concept Type>Data Element
<Object Identifier> 1.3.6.1.4.1.1206.4.2.5.2.8.8"
::= { essNtcipVisibility 8 }
```

5.11 Pavement Sensor Objects

```
-- Contains objects used to describe the data that is collected by the
-- pavement surface sensor.
essNtcipPavement  OBJECT IDENTIFIER ::= {essNtcip 9}
```

© 2022 AASHTO / ITE / NEMA Copy Per MIB Distribution Permission

5.11.1 Number of Pavement Sensors

```
numEssPavementSensors OBJECT-TYPE
SYNTAX      INTEGER (0..255)
ACCESS      read-only
STATUS      mandatory
DESCRIPTION "<Definition>Indicates the number of entries in the pavement
sensor table.
<Informative>This value may automatically change upon connecting or
disconnecting a sensor; however, the table is still defined as a static table
since the creation/deletion of rows is not managed through SNMP logic.
<DescriptiveName>PavementSensorTable.numSensors:quantity
<Data Concept Type>Data Element
<Unit>count
<Object Identifier> 1.3.6.1.4.1.1206.4.2.5.2.9.1"
::=   { essNtcipPavement 1 }
```

5.11.2 Pavement Sensor Table

```
essPavementSensorTable OBJECT-TYPE
SYNTAX      SEQUENCE OF EssPavementSensorEntry
ACCESS      not-accessible
STATUS      mandatory
DESCRIPTION "<Definition>Table containing the pavement sensor data.
<DescriptiveName>PavementSensorTable
<Data Concept Type>Class
<TableType> static
<Object Identifier> 1.3.6.1.4.1.1206.4.2.5.2.9.2"
::=   { essNtcipPavement 2 }
```

5.11.3 Pavement Sensor

```
essPavementSensorEntry OBJECT-TYPE
SYNTAX      EssPavementSensorEntry
ACCESS      not-accessible
STATUS      mandatory
DESCRIPTION "<Definition>A pavement sensor is a sensor that reports the
temperature and moisture condition of the roadway pavement. It can be
described through a number of attributes as indicated by the following
subclauses.
<DescriptiveName>PavementSensor
<Data Concept Type>Class"
INDEX { essPavementSensorIndex }
::=   { essPavementSensorTable 1 }

EssPavementSensorEntry ::= SEQUENCE {
      essPavementSensorIndex              INTEGER,
      essPavementSensorLocation           DisplayString,
      essPavementType                     INTEGER,
      essPavementElevation                INTEGER,
      essPavementExposure                 INTEGER,
      essPavementSensorType               INTEGER,
      essSurfaceStatus                    INTEGER,
      essSurfaceTemperature               INTEGER,
      essPavementTemperature              INTEGER,
      essSurfaceWaterDepth                INTEGER,
      essSurfaceSalinity                  INTEGER,
```

 © 2022 AASHTO / ITE / NEMA

```
      essSurfaceConductivity              INTEGER,
      essSurfaceFreezePoint               INTEGER,
      essSurfaceBlackIceSignal            INTEGER,
      essPavementSensorError              INTEGER,
      essSurfaceIceOrWaterDepth           INTEGER,
      essSurfaceConductivityV2            INTEGER,
      pavementSensorModelInformation      INTEGER,
      pavementSensorTemperatureDepth      INTEGER,
      pavementSensorLatitude              INTEGER,
      pavementSensorLongitude             INTEGER,
      pavementSensorSurfaceCondition      INTEGER,
      pavementSensorForecastCondition     INTEGER,
      pavementSensorFrictionCoefficient   INTEGER,
      pavementMonitorLatitude             INTEGER,
      pavementMonitorLongitude            INTEGER,
      pavementIcePercentage               INTEGER
      }
```

5.11.3.1 Pavement Sensor Index

```
essPavementSensorIndex OBJECT-TYPE
SYNTAX      INTEGER (1..255)
ACCESS      read-only
STATUS      mandatory
DESCRIPTION "<Definition>Enumerated list of row entries that provide surface
sensor data.
<DescriptiveName>PavementSensor.index:identifier
<Data Concept Type>Data Element
<Object Identifier> 1.3.6.1.4.1.1206.4.2.5.2.9.2.1.1"
::= { essPavementSensorEntry 1 }
```

5.11.3.2 Pavement Sensor Location

```
essPavementSensorLocation OBJECT-TYPE
SYNTAX      DisplayString (SIZE (0..255))
ACCESS      read-write
STATUS      mandatory
DESCRIPTION "<Definition>A textual string indicating the location of the
pavement sensor and the location of the pavement being monitored.
<DescriptiveName>PavementSensor.location:text
<Data Concept Type>Data Element
<Object Identifier> 1.3.6.1.4.1.1206.4.2.5.2.9.2.1.2"
::= { essPavementSensorEntry 2 }
```

5.11.3.3 Pavement Type

```
essPavementType OBJECT-TYPE
SYNTAX      INTEGER {   other (1),
                        unknown (2),
                        asphalt (3),
                        openGradedAsphalt (4),
                        concrete (5),
                        steelBridge (6),
                        concreteBridge (7),
                        asphaltOverlayBridge (8),
                        timberBridge (9)}
```

© 2022 AASHTO / ITE / NEMA

```
ACCESS      read-write
STATUS      mandatory
DESCRIPTION "<Definition>Indicates the type of pavement on the roadway.
<DescriptiveName>PavementSensor.type:code
<Valid Value Rule>
other                 a different type of bridge deck
unknown               the data was never recorded in the system or is a
                       mobile sensor
asphalt               asphalt pavement on ground
concrete              concrete pavement on ground
steelBridgeconcrete   a concrete driving surface on a steel girder bridge
steelBridgeAsphalt    an asphalt driving surface on a steel girder bridge
steelBridge           a steel lattice driving surface on the bridge
concreteBridge        a concrete driving surface on a concrete bridge
concreteBridgeAsphalt an asphalt overlay driving surface on a concrete bridge
timberBridge          a wooden deck driving surface on the bridge
<Data Concept Type>Data Element
<Object Identifier> 1.3.6.1.4.1.1206.4.2.5.2.9.2.1.3"
::= { essPavementSensorEntry 3 }
```

5.11.3.4 Pavement Elevation

```
essPavementElevation OBJECT-TYPE
SYNTAX      INTEGER (-1000..1001)
ACCESS      read-write
STATUS      mandatory
DESCRIPTION "<Definition>The elevation of the street surface in meters with
respect to the essReferenceHeight.
<DescriptiveName>PavementSensor.elevation:quantity
<Valid Value Rule>The value 1001 shall indicate a missing value.
<Data Concept Type>Data Element
<Unit>meters
<Object Identifier> 1.3.6.1.4.1.1206.4.2.5.2.9.2.1.4"
::= { essPavementSensorEntry 4 }
```

5.11.3.5 Pavement Exposure

```
essPavementExposure OBJECT-TYPE
SYNTAX      INTEGER (0..101)
ACCESS      read-write
STATUS      mandatory
DESCRIPTION "<Definition>Indicates a very rough percentage of the solar
energy which is anticipated to directly hit the sensor.
<DescriptiveName>PavementSensor.exposure:quantity
<Valid Value Rule>A value of 100 indicates a fully visible sky. A value of
101 shall indicate a missing value.
<Data Concept Type>Data Element
<Unit>percent exposure
<Object Identifier> 1.3.6.1.4.1.1206.4.2.5.2.9.2.1.5"
::= { essPavementSensorEntry 5 }
```

5.11.3.6 Pavement Sensor Type

```
essPavementSensorType OBJECT-TYPE
SYNTAX      INTEGER {   other (1),
                        contactPassive (2),
```

 © 2022 AASHTO / ITE / NEMA

```
                        contactActive (3),
                        infrared (4),
                        radar (5),
                        vibrating (6),
                        microwave (7),
                        laser (8)}
ACCESS      read-only
STATUS      mandatory
DESCRIPTION "<Definition>A value indicating the type of pavement sensor.
<DescriptiveName>PavementSensor.sensorType:code
<Data Concept Type>Data Element
<Object Identifier> 1.3.6.1.4.1.1206.4.2.5.2.9.2.1.6"
::= { essPavementSensorEntry 6 }
```

5.11.3.7 Surface Status

```
-- This object has been deprecated. See Annex D.3.8 for more information.
essSurfaceStatus OBJECT-TYPE
SYNTAX      INTEGER {   other (1),
                        error (2),
                        dry (3),
                        traceMoisture (4),
                        wet (5),
                        chemicallyWet (6),
                        iceWarning (7),
                        iceWatch (8),
                        snowWarning (9),
                        snowWatch (10),
                        absorption (11),
                        dew (12),
                        frost (13),
                        absorptionAtDewpoint (14)}
ACCESS      read-only
STATUS      deprecated
DESCRIPTION "<Definition>A value indicating the pavement surface status.
<DescriptiveName>PavementSensor.surfaceStatus:code
<Valid Value Rule>
other - The value reported by the sensor is not defined by the standard. See
the manufacturer's documentation for more information.
noReport - The sensor is not providing any reading for surface status and may
not be responding
errorReport - The sensor is providing a reading for surface status, but
either the reading indicates an error code or the data has been deemed
invalid or suspect
dry - The sensor does not detect any moisture or unusual conditions.
trace - The sensor detects some moisture, but it is suspected to be isolated
absorption - A salt chemical is present that is not fully dissolved in water.
As a result, the conductivity readings result in erroneous calculations for
amount of chemical in the mix.
wet - The sensor detects a significant amount of moisture indicating a wet
roadway.
chemically wet - The sensor detects a signaificant amount of moisture mixed
with a de-icing or anti-icing chemical
dew - The sensor detects moisture that is suspected to be from the formation
of dew
frost - The sensor detects the formation of frost
```

© 2022 AASHTO / ITE / NEMA

```
freezeAdvisory - The risk of the formation of some sort of frozen moisture on
the roadway is elevated, but its occurrence, location, and/or timing is still
uncertain
slushAdvisory - The risk of the accumulation of snow or slush on the roadway
is elevated, but its occurrence, location, and/or timing is still uncertain
iceAdvisory - The risk of the formation of ice or black ice on the roadway is
elevated, but its occurrence, location, and/or timing is still uncertain
freezeHazard - The sensor detects some sort of frozen moisture but is unable
to classify as slush or ice.
slush - The sensor detects snow or slush.
ice - The sensor detects ice or black ice. (See essSurfaceBlackIceSignal)
<Data Concept Type>Data Element
<Object Identifier> 1.3.6.1.4.1.1206.4.2.5.2.9.2.1.7"
::= { essPavementSensorEntry 7 }
```

5.11.3.8 Surface Temperature

```
essSurfaceTemperature OBJECT-TYPE
SYNTAX      INTEGER (-1000..1001)
ACCESS      read-only
STATUS      mandatory
DESCRIPTION "<Definition>The current pavement surface temperature in tenths
of degrees Celsius.
<DescriptiveName>PavementSensor.surfaceTemperature:quantity
<Valid Value Rule>The value 1001 shall indicate an error condition or missing
value.
<Data Concept Type>Data Element
<Unit>tenths of degrees Celsius
<Object Identifier> 1.3.6.1.4.1.1206.4.2.5.2.9.2.1.8"
::= { essPavementSensorEntry 8 }
```

5.11.3.9 Pavement Temperature

```
essPavementTemperature OBJECT-TYPE
SYNTAX      INTEGER (-1000..1001)
ACCESS      read-only
STATUS      mandatory
DESCRIPTION "<Definition>The current pavement temperature 2-10 cm below the
pavement surface in tenths of degrees Celsius. The specific depth at which
the reading is taken is defined by pavementSensorTemperatureDepth.
<DescriptiveName>PavementSensor.pavementTemperature:quantity
<Valid Value Rule>The value 1001 shall indicate an error condition or missing
value.
<Data Concept Type>Data Element
<Unit>tenths of degrees Celsius
<Object Identifier> 1.3.6.1.4.1.1206.4.2.5.2.9.2.1.9"
::= { essPavementSensorEntry 9 }
```

5.11.3.10 Surface Water Depth

```
-- This object has been deprecated. See Annex D.1.6 for more information.
essSurfaceWaterDepth OBJECT-TYPE
SYNTAX      INTEGER (0..255)
ACCESS      read-only
STATUS      deprecated
```

 © 2022 AASHTO / ITE / NEMA

```
DESCRIPTION "<Definition>The current depth of water on the surface of the
roadway measured in millimeters. The value 255 shall indicate an error
condition or missing value.
<DescriptiveName>PavementSensor.surfaceWaterDepth:quantity
<Data Concept Type>Data Element
<Object Identifier> 1.3.6.1.4.1.1206.4.2.5.2.9.2.1.10"
::= { essPavementSensorEntry 10 }
```

5.11.3.11 Surface Salinity

```
essSurfaceSalinity OBJECT-TYPE
SYNTAX      INTEGER (0..65535)
ACCESS      read-only
STATUS      mandatory
DESCRIPTION "<Definition>The pavement salinity in parts per one hundred
thousand by weight (i.e., grams of solute per 100,000 grams of solution).
<DescriptiveName>PavementSensor.surfaceSalinity:quantity
<Valid Value Rule>The value 65535 shall indicate an error condition or
missing value.
<Data Concept Type>Data Element
<Unit>parts per one hundred thousand by weight
<Object Identifier> 1.3.6.1.4.1.1206.4.2.5.2.9.2.1.11"
::= { essPavementSensorEntry 11 }
```

5.11.3.12 Surface Conductivity

```
-- This object has been deprecated. See Annex D.1.7 for more information.
essSurfaceConductivity OBJECT-TYPE
SYNTAX      INTEGER (0..65535)
ACCESS      read-only
STATUS      deprecated
DESCRIPTION "<Definition>Indicates the conductance of the ice/liquid mixture
on the pavement as detected by the sensor, in mhos, which is the inverse of
ohms. The value 65535 shall indicate an error condition or missing value.
<DescriptiveName>PavementSensor.surfaceConductivity:quantity
<Data Concept Type>Data Element
<Object Identifier> 1.3.6.1.4.1.1206.4.2.5.2.9.2.1.12"
::= { essPavementSensorEntry 12 }
```

5.11.3.13 Surface Freezing Point

```
essSurfaceFreezePoint OBJECT-TYPE
SYNTAX      INTEGER (-1000..1001)
ACCESS      read-only
STATUS      mandatory
DESCRIPTION "<Definition>The temperature in tenths of degrees Celsius at
which the existing solution on the roadway freezes.
<DescriptiveName>PavementSensor.surfaceFreezingPoint:quantity
<Valid Value Rule>The value 1001 shall indicate an error condition or missing
value.
<Data Concept Type>Data Element
<Unit>tenths of degrees Celsius
<Object Identifier> 1.3.6.1.4.1.1206.4.2.5.2.9.2.1.13"
::= { essPavementSensorEntry 13 }
```

© 2022 AASHTO / ITE / NEMA Copy Per MIB Distribution Permission

5.11.3.14 Surface Black Ice Signal

```
essSurfaceBlackIceSignal OBJECT-TYPE
SYNTAX      INTEGER {   other (1),
                        noIce (2),
                        blackIce (3),
                        detectorError (4)}
ACCESS      read-only
STATUS      mandatory
DESCRIPTION "<Definition>A value indicating if Black Ice is detected by the
sensor.
<DescriptiveName>PavementSensor.surfaceBlackIce:code
<Valid Value Rule>
other - The sensor is reporting a value that is not defined by the standard.
See the manufacturer's documentation for more information.
noIce - The sensor is not currently detecting black ice.
blackIce - The sensor is currently detecting black ice.
detectorError - The sensor is not connected, is not reporting, or is
reporting an error.
<Data Concept Type>Data Element
<Object Identifier> 1.3.6.1.4.1.1206.4.2.5.2.9.2.1.14"
::= { essPavementSensorEntry 14 }
```

5.11.3.15 Pavement Sensor Error

```
essPavementSensorError OBJECT-TYPE
SYNTAX      INTEGER {   other (1),
                        none (2),
                        noResponse (3),
                        cutCable (4),
                        shortCircuit (5),
                        dirtyLens (6)}
ACCESS      read-only
STATUS      mandatory
DESCRIPTION "<Definition>A value indicating the type of pavement sensor
error.
<DescriptiveName>PavementSensor.pavementSensorError:code
<Valid Value Rule>
other - An error has been detected that is not defined by the standard; see
the manufacturer's documentation for more information.
none - No error is detected, the sensor appears to be working properly
noResponse - The sensor is configured and is believed to be connected, but is
not responding
cutCable - The sensor is not configured, not present or not fully connected,
perhaps because the cable was cut
shortCircuit - The sensor input has detected a short-circuit.
dirtyLens - The lens of the sensor appears to be dirty.
<Data Concept Type>Data Element
<Object Identifier> 1.3.6.1.4.1.1206.4.2.5.2.9.2.1.15"
::= { essPavementSensorEntry 15 }
```

5.11.3.16 Surface Water Depth—Version 2

```
essSurfaceIceOrWaterDepth OBJECT-TYPE
SYNTAX      INTEGER (0..65535)
ACCESS      read-only
STATUS      mandatory
```

 © 2022 AASHTO / ITE / NEMA

```
DESCRIPTION "<Definition>The current thickness of ice or depth of water on
the surface of the roadway measured in 1/10th of millimeters.
<DescriptiveName>PavementSensor.surfaceIceOrWaterDepth:quantity
<Valid Value Rule>The value 65535 shall indicate an error condition or
missing value.
<Data Concept Type>Data Element
<Unit>1/10th of millimeters
<Object Identifier> 1.3.6.1.4.1.1206.4.2.5.2.9.2.1.16"
::= { essPavementSensorEntry 16 }
```

5.11.3.17 Surface Conductivity—Version 2

```
essSurfaceConductivityV2 OBJECT-TYPE
SYNTAX      INTEGER (0..65535)
ACCESS      read-only
STATUS      mandatory
DESCRIPTION "<Definition>Indicates the conductivity of the ice/liquid mixture
on the pavement as detected by the sensor, in 1/10ths of milli-mhos/cm (mhos
is the inverse of ohms). This value is independent of the size or shape of
the sensor and can be directly translated into a percent concentration of
chemical (e.g. salinity) through look-up tables for a given chemical.
<DescriptiveName>PavementSensor.surfaceConductivityV2:quantity
<Valid Value Rule>The value  65535 shall indicate an error condition or
missing value.
<Data Concept Type>Data Element
<Unit>1/10ths of milli-mhos/cm
<Object Identifier> 1.3.6.1.4.1.1206.4.2.5.2.9.2.1.17"
::= { essPavementSensorEntry 17 }
```

5.11.3.18 Pavement Sensor Model Information

```
pavementSensorModelInformation OBJECT-TYPE
SYNTAX      INTEGER (0..255)
ACCESS      read-write
STATUS      mandatory
DESCRIPTION "<Definition>Indicates the row in the Module Table (See NTCIP
1201) that contains information about the make, model, and version number of
the sensor associated with this row of the Pavement Sensor Table.
<DescriptiveName>PavementSensor.modelInformation:identifier
<Valid Value Rule>The value of zero indicates that this information is not
available.
<Data Concept Type>Data Element
<Object Identifier> 1.3.6.1.4.1.1206.4.2.5.2.9.2.1.18"
::= { essPavementSensorEntry 18 }
```

5.11.3.19 Pavement Temperature Depth

```
pavementSensorTemperatureDepth OBJECT-TYPE
SYNTAX      INTEGER (2..11)
ACCESS      read-only
STATUS      mandatory
DESCRIPTION "<Definition>The depth at which the pavement temperature is
detected.
<DescriptiveName>PavementSensor.temperatureDepth:quantity
<Valid Value Rule>The value of 11 indicates that the information is not
available.
```

© 2022 AASHTO / ITE / NEMA Copy Per MIB Distribution Permission

```
<Data Concept Type>Data Element
<Unit>centimeters
<Object Identifier> 1.3.6.1.4.1.1206.4.2.5.2.9.2.1.19"
::= { essPavementSensorEntry 19 }
```

5.11.3.20 Pavement Sensor Latitude

```
pavementSensorLatitude OBJECT-TYPE
SYNTAX      INTEGER (-90000000..90000001)
ACCESS      read-write
STATUS      mandatory
DESCRIPTION "<Definition>The latitude in 10^-6 degrees of the ESS pavement
sensor, per WGS-84 datum.
<DescriptiveName>PavementSensor.latitude:quantity
<Valid Value Rule>The pavementSensorLatitude at the North Pole is 90,000,000.
The pavementSensorLatitude at the South Pole is -90,000,000. The value
90,000,001 shall indicate a missing value.
<Data Concept Type>Data Element
<Unit>latitude
<Object Identifier> 1.3.6.1.4.1.1206.4.2.5.2.9.2.1.20"
REFERENCE   "Resolution based on on-going location referencing activities;
the WMO Binary Code Form FM 94 BUFR Table B item 0 05 001 can be obtained by
dividing this value by 10."
::=   { essPavementSensorEntry 20 }
```

5.11.3.21 Pavement Sensor Longitude

```
pavementSensorLongitude OBJECT-TYPE
SYNTAX      INTEGER (-180000000..180000001)
ACCESS      read-write
STATUS      mandatory
DESCRIPTION "<Definition>The east longitude in 10^-6 degrees from the Prime
Meridian of the ESS pavement sensor location.
<DescriptiveName>PavementSensor.longitude:quantity
<Valid Value Rule>The pavementSensorLongitude of 180 degrees West shall be -
180,000,000. The pavementSensorLongitude of 180 degrees East shall be
180,000,000. The value 180,000,001 shall indicate a missing value.
<Data Concept Type>Data Element
<Unit>longitude
<Object Identifier> 1.3.6.1.4.1.1206.4.2.5.2.9.2.1.21"
REFERENCE   "Resolution based on on-going location referencing activities;
the WMO Binary Code Form FM 94 BUFR Table B item 0 06 001 can be obtained by
dividing this value by 10."
::=   { essPavementSensorEntry 21 }
```

5.11.3.22 Pavement Surface Condition

```
pavementSensorSurfaceCondition OBJECT-TYPE
SYNTAX      INTEGER {   other (1),
                        error (2),
                        dry (3),
                        moist (4),
                        chemicallyMoist(5),
                        wet (6),
                        chemicallyWet (7),
                        standingWater (8),
```

 © 2022 AASHTO / ITE / NEMA

```
                        frost (9),
                        slush (10),
                        snow (11),
                        ice (12),
                        noReport (13) }
ACCESS      read-only
STATUS      mandatory
DESCRIPTION "<Definition>A value indicating the pavement surface status.
<DescriptiveName>PavementSensor.surfaceStatus:code
<Valid Value Rule>
other: The value reported by the sensor is not defined by the standard. See
the manufacturer's documentation for more information
error: The sensor is providing a reading for surface status, but either the
reading indicates an error code or the data has been deemed invalid or
suspect
dry: no humidity over the sensor (EN 15518-3)
moist: from 0.01 mm to 0.2 mm water film thickness over the sensor (EN 15518-
3)
chemically moist: from 0.01 mm to 0.2 mm water film thickness over the sensor
mixed with de-icing or anti-icing chemical
wet: from 0.2 mm water film thickness to 2.0 mm water film thickness over the
sensor (EN 15518-3)
chemically wet: from 0.2 mm water film thickness or greater mixed with de-
icing or anti-icing chemical
standing water: from 2.0 mm or greater water film thickness over the sensor
(EN 15518-3)
frost: formation of frost (ice crystals) is detected over the sensor
slush: snow or ice that has been reduced to a soft water mixture by rain,
warm temperature, and/or chemical treatment (Glossary of Meteorology)
snow: snow is detected over the sensor
ice: ice or black ice is detected (See essSurfaceBlackIceSignal)
noReport: The sensor is not providing any reading for surface status and may
not be responding
<Data Concept Type>Data Element
<Object Identifier> 1.3.6.1.4.1.1206.4.2.5.2.9.2.1.22"
::= { essPavementSensorEntry 22 }
```

5.11.3.23 Pavement Forecasted Condition

```
pavementSensorForecastCondition OBJECT-TYPE
SYNTAX      INTEGER {   other (1),
                        error (2),
                        noAdvisory (3),
                        iceAdvisory (4),
                        slushAdvisory(5),
                        freezeAdvisory (6),
                        freezeHazard (7),
                        noReport (8) }
ACCESS      read-only
STATUS      mandatory
DESCRIPTION "<Definition>A value indicating the pavement surface status.
<DescriptiveName>PavementSensor.surfaceForecast:code
<Valid Value Rule>
```

© 2022 AASHTO / ITE / NEMA

```
other: The value reported by the sensor is not defined by the standard. See
the manufacturer's documentation for more information.
error: The sensor is providing a reading for surface status, but either the
reading indicates an error code or the data has been deemed invalid or
suspect
noAdvisory: No frozen moisture is detected and the risk of frozen moisture is
low.
iceAdvisory: The risk of the formation of ice or black ice on the roadway is
elevated, but its occurrence, location, and/or timing is still uncertain
slushAdvisory: The risk of the accumulation of snow or slush on the roadway
is elevated, but its occurrence, location, and/or timing is still uncertain
freezeAdvisory: The risk of the formation of some sort of frozen moisture on
the roadway is elevated, but its occurrence, location, and/or timing is still
uncertain
freezeHazard: The sensor detects some sort of frozen moisture but is unable
to classify as slush or ice
noReport: The sensor is not providing any reading for surface status and may
not be responding
<Data Concept Type>Data Element
<Object Identifier> 1.3.6.1.4.1.1206.4.2.5.2.9.2.1.23"
::= { essPavementSensorEntry 23 }
```

5.11.3.24 Pavement Surface Friction Coefficient

```
pavementSensorFrictionCoefficient OBJECT-TYPE
SYNTAX      INTEGER (0..101)
ACCESS      read-only
STATUS      mandatory
DESCRIPTION "<Definition>A value representing the friction coefficient of the
roadway pavement in one-hundredths. A value of 100 represents a coefficient
of friction of 1.00.
<DescriptiveName>PavementSensor.surfaceFriction:quantity
<Valid Value Rule>The value 101 shall indicate an error condition or missing
value.
<Data Concept Type>Data Element
<Object Identifier> 1.3.6.1.4.1.1206.4.2.5.2.9.2.1.24"
::= { essPavementSensorEntry 24 }
```

5.11.3.25 Pavement Monitoring Latitude

```
pavementMonitorLatitude OBJECT-TYPE
SYNTAX      INTEGER (-90000000..90000001)
ACCESS      read-write
STATUS      mandatory
DESCRIPTION "<Definition>The latitude in 10^-6 degrees of the location that
the ESS pavement sensor is monitoring, per WGS-84 datum. A value of 0 for
this object and pavementMonitorLongitude indicates that the location being
monitored is the same as defined in pavementSensorLatitude and
pavementSensorLongitude.
<DescriptiveName>PavementSensorMonitor.latitude:quantity
<Valid Value Rule>The pavementMonitorLatitude at the North Pole is
90,000,000. The pavementMonitorLatitude at the South Pole is -90,000,000. The
value 90,000,001 shall indicate a missing value.
<Data Concept Type>Data Element
<Unit>latitude
<Object Identifier> 1.3.6.1.4.1.1206.4.2.5.2.9.2.1.25"
```

 © 2022 AASHTO / ITE / NEMA

```
REFERENCE   "Resolution based on on-going location referencing activities;
the WMO Binary Code Form FM 94 BUFR Table B item 0 05 001 can be obtained by
dividing this value by 10."
::=   { essPavementSensorEntry 25 }
```

5.11.3.26 Pavement Monitoring Longitude

```
pavementMonitorLongitude OBJECT-TYPE
SYNTAX      INTEGER (-180000000..180000001)
ACCESS      read-write
STATUS      mandatory
DESCRIPTION "<Definition>The east longitude in 10^-6 degrees from the Prime
Meridian of the location that the ESS pavement sensor is monitoring. A value
of 0 for this object and pavementMonitorLatitude indicates that the location
being monitored is the same as defined in pavementSensorLatitude and
pavementSensorLongitude.
<DescriptiveName>PavementSensorMonitor.longitude:quantity
<Valid Value Rule>The pavementMonitorLongitude of 180 degrees West shall be -
180,000,000. The pavementMonitorLongitude of 180 degrees East shall be
180,000,000. The value 180,000,001 shall indicate a missing value.
<Data Concept Type>Data Element
<Unit>longitude
<Object Identifier> 1.3.6.1.4.1.1206.4.2.5.2.9.2.1.26"
REFERENCE   "Resolution based on on-going location referencing activities;
the WMO Binary Code Form FM 94 BUFR Table B item 0 06 001 can be obtained by
dividing this value by 10."
::=   { essPavementSensorEntry 26 }
```

5.11.3.27 Pavement Ice Percentage

```
pavementIcePercentage OBJECT-TYPE
SYNTAX      INTEGER (0..101)
ACCESS      read-only
STATUS      mandatory
DESCRIPTION "<Definition> The percentage of ice on the surface by volume.
<DescriptiveName>PavementSensor.icePercent:quantity
<Valid Value Rule>The value 101 shall indicate an error condition or missing
value.<Data Concept Type>Data Element
<Unit>percent
<Object Identifier> 1.3.6.1.4.1.1206.4.2.5.2.9.2.1.27"
::=   { essPavementSensorEntry 27 }
```

5.11.4 Number of Subsurface Sensors

```
numEssSubSurfaceSensors OBJECT-TYPE
SYNTAX      INTEGER (0..255)
ACCESS      read-only
STATUS      mandatory
DESCRIPTION "<Definition>Indicates the number of entries in the Subsurface
Sensor Table.
<Informative>This value may automatically change upon connecting or
disconnecting a sensor; however, the table is still defined as a static table
since the creation/deletion of rows is not managed through SNMP logic.
<DescriptiveName>SubSurfaceSensorTable.numSensors:quantity
<Data Concept Type>Data Element
<Unit>count
```

© 2022 AASHTO / ITE / NEMA

```
<Object Identifier> 1.3.6.1.4.1.1206.4.2.5.2.9.3"
::=   { essNtcipPavement 3 }
```

5.11.5 Subsurface Sensor Table

```
essSubSurfaceSensorTable OBJECT-TYPE
SYNTAX      SEQUENCE OF EssSubSurfaceSensorEntry
ACCESS      not-accessible
STATUS      mandatory
DESCRIPTION "<Definition>Table containing the subsurface sensor data.
<DescriptiveName>SubSurfaceSensorTable
<Data Concept Type>Class
<TableType>static
<Object Identifier> 1.3.6.1.4.1.1206.4.2.5.2.9.4"
::=   { essNtcipPavement 4 }
```

5.11.6 Subsurface Sensor

```
essSubSurfaceSensorEntry OBJECT-TYPE
SYNTAX      EssSubSurfaceSensorEntry
ACCESS      not-accessible
STATUS      mandatory
DESCRIPTION "<Definition>A subsurface sensor is a sensor that reports the
temperature and moisture condition of the roadway subsurface. It can be
described through a number of attributes as indicated by the following
subclauses.
<DescriptiveName>SubSurfaceSensor
<Data Concept Type>Class"
INDEX { essSubSurfaceSensorIndex }
::=   { essSubSurfaceSensorTable 1 }

EssSubSurfaceSensorEntry ::= SEQUENCE {
      essSubSurfaceSensorIndex                    INTEGER,
      essSubSurfaceSensorLocation                 DisplayString,
      essSubSurfaceType                           INTEGER,
      essSubSurfaceSensorDepth                    INTEGER,
      essSubSurfaceTemperature                    INTEGER,
      essSubSurfaceMoisture                       INTEGER,
      essSubSurfaceSensorError                    INTEGER,
      essSubSurfaceSensorLatitude                 INTEGER,
      essSubSurfaceSensorLongitude                INTEGER,
      essSubSurfaceSensorModelInformation         INTEGER}
```

5.11.6.1 Subsurface Sensor Index

```
essSubSurfaceSensorIndex OBJECT-TYPE
SYNTAX      INTEGER (1..255)
ACCESS      read-only
STATUS      mandatory
DESCRIPTION "<Definition>Enumerated list of row entries that provide
subsurface sensor data.
<DescriptiveName>SubSurfaceSensor.index:identifier
<Data Concept Type>Data Element
<Object Identifier> 1.3.6.1.4.1.1206.4.2.5.2.9.4.1.1"
::= { essSubSurfaceSensorEntry 1 }
```

 © 2022 AASHTO / ITE / NEMA

5.11.6.2 Subsurface Sensor Location

```
essSubSurfaceSensorLocation OBJECT-TYPE
SYNTAX      DisplayString (SIZE (0..255))
ACCESS      read-write
STATUS      mandatory
DESCRIPTION "<Definition>A textual string indicating the location of the
subsurface sensor.
<DescriptiveName>SubSurfaceSensor.location:text
<Data Concept Type>Data Element
<Object Identifier> 1.3.6.1.4.1.1206.4.2.5.2.9.4.1.2"
::= { essSubSurfaceSensorEntry 2 }
```

5.11.6.3 Subsurface Type

```
essSubSurfaceType OBJECT-TYPE
SYNTAX      INTEGER {   other (1),
                        unknown (2),
                        concrete (3),
                        asphalt (4),
                        openGradedAsphalt (5),
                        gravel (6),
                        clay (7),
                        loam (8),
                        sand (9),
                        permafrost (10),
                        variousAggregates (11),
                        air (12)}
ACCESS      read-write
STATUS      mandatory
DESCRIPTION "<Definition>Indicates the type of subsurface. A value of air
would indicate a bridge.
<DescriptiveName>SubSurfaceSensor.type:code
<Data Concept Type>Data Element
<Object Identifier> 1.3.6.1.4.1.1206.4.2.5.2.9.4.1.3"
::= { essSubSurfaceSensorEntry 3 }
```

5.11.6.4 Subsurface Sensor Depth

```
essSubSurfaceSensorDepth OBJECT-TYPE
SYNTAX      INTEGER (0..1001)
ACCESS      read-write
STATUS      mandatory
DESCRIPTION "<Definition>Depth of subsurface sensor in centimeters below the
pavement surface.
<DescriptiveName>SubSurfaceSensor.depth:quantity
<Valid Value Rule>The value 1001 shall indicate an error condition or missing
value.
<Data Concept Type>Data Element
<Unit>centimeters
<Object Identifier> 1.3.6.1.4.1.1206.4.2.5.2.9.4.1.4"
::= { essSubSurfaceSensorEntry 4 }
```

5.11.6.5 Subsurface Temperature

```
essSubSurfaceTemperature OBJECT-TYPE
SYNTAX      INTEGER (-1000..1001)
```

© 2022 AASHTO / ITE / NEMA Copy Per MIB Distribution Permission

```
ACCESS      read-only
STATUS      mandatory
DESCRIPTION "<Definition>The current subsurface temperature in tenths of
degrees Celsius.
<DescriptiveName>SubSurfaceSensor.temperature:quantity
<Valid Value Rule>The value 1001 shall indicate an error condition or missing
value.
<Data Concept Type>Data Element
<Unit>tenths of degrees Celsius
<Object Identifier> 1.3.6.1.4.1.1206.4.2.5.2.9.4.1.5"
::= { essSubSurfaceSensorEntry 5 }
```

5.11.6.6 Subsurface Moisture

```
essSubSurfaceMoisture OBJECT-TYPE
SYNTAX      INTEGER (0..101)
ACCESS      read-only
STATUS      mandatory
DESCRIPTION "<Definition>The subsurface moisture expressed as a percentage
(e.g. 0 indicates dry, 100 indicates saturated).
<DescriptiveName>SubSurfaceSensor.moisture:quantity
<Valid Value Rule>The value 101 indicates an error condition or missing
value.
<Data Concept Type>Data Element
<Unit>percentage
<Object Identifier> 1.3.6.1.4.1.1206.4.2.5.2.9.4.1.7"
::= { essSubSurfaceSensorEntry 7 }
```

5.11.6.7 Subsurface Sensor Error

```
essSubSurfaceSensorError OBJECT-TYPE
SYNTAX      INTEGER {   other (1),
                        none (2),
                        noResponse (3),
                        cutCable (4),
                        shortCircuit (5)}
ACCESS      read-only
STATUS      mandatory
DESCRIPTION "<Definition>A value indicating the type of sensor error.
<DescriptiveName>SubSurfaceSensor.error:code
<Valid Value Rule>
other - An error has been detected that is not defined by the standard; see
the manufacturer's documentation for more information.
none - No error is detected, the sensor appears to be working properly
noResponse - The sensor is configured and is believed to be connected, but is
not responding
cutCable - The sensor is not configured, not present or not fully connected,
perhaps because the cable was cut
shortCircuit - The sensor input has detected a short-circuit.
<Data Concept Type>Data Element
<Object Identifier> 1.3.6.1.4.1.1206.4.2.5.2.9.4.1.8"
::= { essSubSurfaceSensorEntry 8 }
```

5.11.6.8 Subsurface Sensor Latitude

```
essSubSurfaceSensorLatitude OBJECT-TYPE
```

 © 2022 AASHTO / ITE / NEMA

```
SYNTAX      INTEGER (-90000000..90000001)
ACCESS      read-write
STATUS      mandatory
DESCRIPTION "<Definition>The latitude in 10^-6 degrees of the ESS subsurface
sensor, per WGS-84 datum.
<DescriptiveName>SubSurfaceSensor.latitude:quantity
<Valid Value Rule>The essSubSurfaceSensorLatitude at the North Pole is
90,000,000. The essSubSurfaceSensorLatitude at the South Pole is -90,000,000.
The value 90,000,001 shall indicate a missing value.
<Data Concept Type>Data Element
<Unit>latitude
<Object Identifier> 1.3.6.1.4.1.1206.4.2.5.2.9.4.1.9"
REFERENCE   "Resolution based on on-going location referencing activities;
the WMO Binary Code Form FM 94 BUFR Table B item 0 05 001 can be obtained by
dividing this value by 10."
::=   { essSubSurfaceSensorEntry 9 }
```

5.11.6.9 Subsurface Sensor Longitude

```
essSubSurfaceSensorLongitude OBJECT-TYPE
SYNTAX      INTEGER (-180000000..180000001)
ACCESS      read-write
STATUS      mandatory
DESCRIPTION "<Definition>The east longitude in 10^-6 degrees from the Prime
Meridian of the ESS subsurface sensor location.
<DescriptiveName>SubSurfaceSensor.longitude:quantity
<Valid Value Rule>The essSubSurfaceSensorLongitude of 180 degrees West shall
be -180,000,000. The essSubSurfaceSensorLongitude of 180 degrees East shall
be 180,000,000. The value 180,000,001 shall indicate a missing value.
<Data Concept Type>Data Element
<Unit>longitude
<Object Identifier> 1.3.6.1.4.1.1206.4.2.5.2.9.4.1.10"
REFERENCE   "Resolution based on on-going location referencing activities;
the WMO Binary Code Form FM 94 BUFR Table B item 0 06 001 can be obtained by
dividing this value by 10."
::=   { essSubSurfaceSensorEntry 10 }
```

5.11.6.10 Subsurface Sensor Model Information

```
essSubSurfaceSensorModelInformation OBJECT-TYPE
SYNTAX      INTEGER (0..255)
ACCESS      read-write
STATUS      mandatory
DESCRIPTION "<Definition>Indicates the row in the Module Table (See NTCIP
1201) that contains information about the make, model, and version number of
the sensor associated with this row of the SubSurface Sensor Table.
<DescriptiveName>SubSurfaceSensor.modelInformation:identifier
<Valid Value Rule>The value of zero indicates that this information is not
available.
<Data Concept Type>Data Element
<Object Identifier> 1.3.6.1.4.1.1206.4.2.5.2.9.4.1.11"
::= { essSubSurfaceSensorEntry 11 }
```

5.11.7 Pavement Block

```
-- This object has been deprecated. See Annex D.2.10 for more
```

© 2022 AASHTO / ITE / NEMA

```
-- information.
essPavementBlock OBJECT-TYPE
SYNTAX      OerString
ACCESS      read-only
STATUS      deprecated
DESCRIPTION "<Definition>An OER encoded string of the EssPavementData
structure as defined below. This object is used for uploading current
pavement data from the ESS in a bandwidth efficient manner.

The OPTIONAL fields shall be present if the data is supported by the
implementation and is valid. The OPTIONAL fields shall be omitted for any
data that is invalid or not supported by the implementation.

EssPavementData ::= SEQUENCE OF PavementSensorData
      -- for (
--    x = 1;
--    x < numEssPavementSensors.0;
--    x++)


PavementSensorData ::= SEQUENCE {
      essPavementSensorIndex.x            OPTIONAL, -- @NTCIP1204-v03
      essSurfaceStatusV2.x                OPTIONAL, -- @NTCIP1204-v03
      essSurfaceTemperature.x             OPTIONAL, -- @NTCIP1204-v03
      essPavementTemperature.x            OPTIONAL, -- @NTCIP1204-v03
      essSurfaceWaterDepth.x              OPTIONAL, -- @NTCIP1204-v03
      essSurfaceSalinity.x                OPTIONAL, -- @NTCIP1204-v03
      essSurfaceConductivity.x            OPTIONAL, -- @NTCIP1204-v03
      essSurfaceFreezePoint.x             OPTIONAL, -- @NTCIP1204-v03
      essSurfaceBlackIceSignal.x          OPTIONAL, -- @NTCIP1204-v03
      essPavementSensorError.x            OPTIONAL  -- @NTCIP1204-v03
}
<Informative>This object has been replaced by essPavementV3Block (See
5.11.9).
<DescriptiveName>PavementSensorTable.pavementBlock:code
<Data Concept Type>Data Element
<Object Identifier> 1.3.6.1.4.1.1206.4.2.5.2.9.5"
::=   { essNtcipPavement 5 }
```

5.11.8 Subsurface Block Object

```
essSubSurfaceBlock OBJECT-TYPE
SYNTAX      OerString
ACCESS      read-only
STATUS      mandatory
DESCRIPTION "<Definition>An OER encoded string of the EssSubsurfaceData
structure as defined below. This object is used for uploading current
subsurface data from the ESS in a bandwidth efficient manner.

The OPTIONAL fields shall be present if the data is supported by the
implementation and is valid. The OPTIONAL fields shall be omitted for any
data that is invalid or not supported by the implementation.

EssSubSurfaceData ::= SEQUENCE OF SubSurfaceSensorData
      -- for (
--    x = 1;
--    x < numEssSubSurfaceSensors.0;
```

 © 2022 AASHTO / ITE / NEMA

```
--    x++)

SubSurfaceSensorData ::= SEQUENCE {
      essSubSurfaceSensorIndex.x          OPTIONAL, -- @NTCIP1204-v03
      essSubSurfaceTemperature.x          OPTIONAL, -- @NTCIP1204-v03
      essSubSurfaceMoisture.x             OPTIONAL, -- @NTCIP1204-v03
      essSubSurfaceSensorError.x          OPTIONAL  -- @NTCIP1204-v03
      }
<DescriptiveName>SubSurfaceSensorTable.subsurfaceBlock:code
<Data Concept Type>Data Element
<Object Identifier> 1.3.6.1.4.1.1206.4.2.5.2.9.6"
::=   { essNtcipPavement 6 }
```

5.11.9 Pavement Block V3

```
-- This object has been deprecated. See Annex D.3.2 for more information.
essPavementV3Block OBJECT-TYPE
SYNTAX      OerString
ACCESS      read-only
STATUS      deprecated
DESCRIPTION "<Definition>An OER encoded string of the EssPavementDataV3
structure as defined below. This object is used for uploading current
pavement data from the ESS in a bandwidth efficient manner.

The OPTIONAL fields shall be present if the data is supported by the
implementation and is valid. The OPTIONAL fields shall be omitted for any
data that is invalid or not supported by the implementation.

EssPavementDataV3 ::= SEQUENCE OF PavementSensorDataV3
      -- for (
--    x = 1;
--    x < numEssPavementSensors.0;
--    x++)


PavementSensorDataV3 ::= SEQUENCE {
      essPavementSensorIndex.x            OPTIONAL, -- @NTCIP1204-v03
      essSurfaceStatus.x                  OPTIONAL, -- @NTCIP1204-v03
      essSurfaceTemperature.x             OPTIONAL, -- @NTCIP1204-v03
      essPavementTemperature.x            OPTIONAL, -- @NTCIP1204-v03
      essSurfaceSalinity.x                OPTIONAL, -- @NTCIP1204-v03
      essSurfaceFreezePoint.x             OPTIONAL, -- @NTCIP1204-v03
      essSurfaceBlackIceSignal.x          OPTIONAL, -- @NTCIP1204-v03
      essPavementSensorError.x            OPTIONAL, -- @NTCIP1204-v03
      essSurfaceIceOrWaterDepth.x         OPTIONAL, -- @NTCIP1204-v03
      essSurfaceConductivityV2.x          OPTIONAL  -- @NTCIP1204-v03
}
<DescriptiveName>PavementSensorTable.pavementBlock:code
<Data Concept Type>Data Element
<Object Identifier> 1.3.6.1.4.1.1206.4.2.5.2.9.7"
::=   { essNtcipPavement 7 }
```

5.12 Mobile Platform Objects

```
-- Contains objects related to monitoring mobile platforms that act as
-- ESS (e.g., specially-equipped maintenance vehicles).
-- There has been limited use of mobile ESS platforms within the
```

© 2022 AASHTO / ITE / NEMA Copy Per MIB Distribution Permission

```
-- surface transportation industry and as such these objects
-- should be considered experimental.
essNtcipMobile  OBJECT IDENTIFIER ::= {essNtcip 10}
```

5.12.1 Detected Friction

```
-- This object has been deprecated. See Annex D.3.3.5 for more information.
essMobileFriction OBJECT-TYPE
SYNTAX      INTEGER (0..101)
ACCESS      read-only
STATUS      deprecated
DESCRIPTION "<Definition>Indicates measured coefficient of friction in
percent.
<DescriptiveName>MobilePlatform.friction:quantity
<Valid Value Rule>The value 101 shall indicate an error condition or missing
value.
<Data Concept Type>Data Element
<Unit>percent friction
<Object Identifier> 1.3.6.1.4.1.1206.4.2.5.2.10.1"
::=   { essNtcipMobile 1 }
```

5.12.2 Observed Ground State

```
-- This object has been deprecated. See Annex D.3.9 for more information.
essMobileObservationGroundState OBJECT-TYPE
SYNTAX      INTEGER {   other (1),
                        dry (2),
                        moist (3),
                        wet (4),
                        flooded (5),
                        frozen (6),
                        glaze (7),
                        dustySandy (8),
                        veryDry (9),
                        icy (10),
                        patchyWetSnow (11),
                        moderateWetSnowCover (12),
                        fullWetSnowCover (13),
                        patchyDrySnow (14),
                        moderateDrySnowCover (15),
                        fullDrySnowCover (16),
                        driftingSnow (17),
                        unknown (18)}
ACCESS      read-only
STATUS      deprecated
DESCRIPTION "<Definition>The prevailing observed ground state of the
surrounding environment as determined by the observer. This is an indicator
of past weather conditions.
<DescriptiveName>MobilePlatform.observedGroundState:code
<Data Concept Type>Data Element
<Object Identifier> 1.3.6.1.4.1.1206.4.2.5.2.10.2"
::=   { essNtcipMobile 2 }
```

5.12.3 Observed Pavement State

```
-- This object has been deprecated. See Annex D.3.10 for more information.
```

 © 2022 AASHTO / ITE / NEMA

```
essMobileObservationPavement OBJECT-TYPE
SYNTAX      INTEGER {   other (1),
                        dry (2),
                        wet (3),
                        puddles (4),
                        shallowStandingWater (5),
                        shallowFlowingWater (6),
                        deepStandingWater (7),
                        deepFlowingWater (8),
                        dustingFreshSnow (9),
                        moderateFreshSnow (10),
                        deepFreshSnow (11),
                        plowedSnow (12),
                        slush (13),
                        packedSnowPatches (14),
                        packedSnow (15),
                        lightSnowDrifts (16),
                        moderateSnowDrifts (17),
                        heavySnowDrifts (18),
                        frost (19),
                        icePatches (20),
                        moderatelyIcy (21),
                        heavyIcing (22),
                        blackIce (23),
                        sheetIce (24),
                        frozenSlush (25)}
ACCESS      read-only
STATUS      deprecated
DESCRIPTION "<Definition>The prevailing observed conditions on the driving
surface as determined by the observer.
<DescriptiveName>MobilePlatform.observedPavementState:code
<Data Concept Type>Data Element
<Object Identifier> 1.3.6.1.4.1.1206.4.2.5.2.10.3"
::=   { essNtcipMobile 3 }
```

5.12.4 Observed Ground State - Version 4

```
essMobileObservationGroundStateV4 OBJECT-TYPE
SYNTAX      INTEGER {   other (1),
                        dry (2),
                        moist (3),
                        wet (4),
                        flooded (5),
                        frozen (6),
                        glaze (7),
                        dustySandy (8),
                        veryDry (9),
                        icy (10),
                        patchyWetSnow (11),
                        moderateWetSnowCover (12),
                        fullWetSnowCover (13),
                        patchyDrySnow (14),
                        moderateDrySnowCover (15),
                        fullDrySnowCover (16),
                        driftingSnow (17),
                        unknown (18),
                        puddles (19),
```

© 2022 AASHTO / ITE / NEMA

```
                        standingWater (20),
                        flowingWater (21),
                        freshSnow (22),
                        plowedSnow (23),
                        slush (24)}
ACCESS      read-only
STATUS      mandatory
DESCRIPTION "<Definition>The prevailing observed ground state of the
surrounding environment as determined by the observer. This is an indicator
of past weather conditions.
<DescriptiveName>MobilePlatform.observedGroundState:code
<Data Concept Type>Data Element
<Object Identifier> 1.3.6.1.4.1.1206.4.2.5.2.10.4"
::=   { essNtcipMobile 4 }
```

5.12.5 Observed Pavement State - Version 4

```
essMobileObservationPavementV4 OBJECT-TYPE
SYNTAX      INTEGER {   other (1),
                        dry (2),
                        wet (3),
                        puddles (4),
                        shallowStandingWater (5),
                        shallowFlowingWater (6),
                        deepStandingWater (7),
                        deepFlowingWater (8),
                        dustingFreshSnow (9),
                        moderateFreshSnow (10),
                        deepFreshSnow (11),
                        plowedSnow (12),
                        slush (13),
                        packedSnowPatches (14),
                        packedSnow (15),
                        lightSnowDrifts (16),
                        moderateSnowDrifts (17),
                        heavySnowDrifts (18),
                        frost (19),
                        icePatches (20),
                        moderatelyIcy (21),
                        heavyIcing (22),
                        blackIce (23),
                        sheetIce (24),
                        frozenSlush (25),
                        absorption (26),
                        absorptionAtDewpoint (27),
                        bareAndDry (28),
                        bareAndWet (29),
                        blowingsnow (30),
                        chemicallyWet (31),
                        dew (32),
                        damp (33),
                        wetSlush (34)}
ACCESS      read-only
STATUS      mandatory
DESCRIPTION "<Definition>The prevailing observed conditions on the driving
surface as determined by the observer.
<DescriptiveName>MobilePlatform.observedPavementState:code
```

 © 2022 AASHTO / ITE / NEMA

```
<Data Concept Type>Data Element
<Object Identifier> 1.3.6.1.4.1.1206.4.2.5.2.10.5"
::=   { essNtcipMobile 5 }
```

5.13 Pavement Treatment Objects

```
-- Contains objects that monitor the various types and amounts of
-- treatments that are spread on the pavement surface.
essNtcipTreatment OBJECT IDENTIFIER ::= { essNtcip 11 }
```

5.13.1 Number of Treatments

```
numEssTreatments OBJECT-TYPE
SYNTAX      INTEGER (0..255)
ACCESS      read-only
STATUS      mandatory
DESCRIPTION "<Definition>Indicates the number of entries in the Pavement
Treatment Table.
<DescriptiveName>PavementTreatmentTable.numTreatments:quantity
<Data Concept Type>Data Element
<Unit>count
<Object Identifier> 1.3.6.1.4.1.1206.4.2.5.2.11.1"
::=   { essNtcipTreatment 1 }
```

5.13.2 Pavement Treatment Table

```
essPavementTreatmentTable OBJECT-TYPE
SYNTAX      SEQUENCE OF EssPavementTreatmentEntry
ACCESS      not-accessible
STATUS      mandatory
DESCRIPTION "<Definition>Table containing the pavement treatment data.
<DescriptiveName>PavementTreatmentTable
<Data Concept Type>Class
<TableType>static
<Object Identifier> 1.3.6.1.4.1.1206.4.2.5.2.11.2"
::=   { essNtcipTreatment 2 }
```

5.13.3 Pavement Treatment

```
essPavementTreatmentEntry OBJECT-TYPE
SYNTAX      EssPavementTreatmentEntry
ACCESS      not-accessible
STATUS      mandatory
DESCRIPTION "<Definition>A pavement treatment is a chemical that can be
applied to the roadway to de-ice or prevent icing of the pavement. It can be
described through a number of attributes as indicated by the following
subclauses.
<DescriptiveName>PavementTreatment
<Data Concept Type>Class"
INDEX { essPavementTreatmentIndex }
::=   { essPavementTreatmentTable 1 }

EssPavementTreatmentEntry ::= SEQUENCE {
      essPavementTreatmentIndex               INTEGER,
      essPaveTreatProductType                 INTEGER,
      essPaveTreatProductForm                 INTEGER,
```

© 2022 AASHTO / ITE / NEMA

```
      essPercentProductMix                    INTEGER}
```

5.13.3.1 Pavement Treatment Index

```
essPavementTreatmentIndex OBJECT-TYPE
SYNTAX      INTEGER (1..255)
ACCESS      read-only
STATUS      mandatory
DESCRIPTION "<Definition>Enumerated list of row entries that provide pavement
treatment data.
<DescriptiveName>PavementTreatment.index:identifier
<Data Concept Type>Data Element
<Object Identifier> 1.3.6.1.4.1.1206.4.2.5.2.11.2.1.1"
::= { essPavementTreatmentEntry 1 }
```

5.13.3.2 Pavement Treatment Product Type

```
essPaveTreatProductType OBJECT-TYPE
SYNTAX      INTEGER {   other (1),
                        sand (2),
                        dirt (3),
                        gravel (4),
                        cinders (5),
                        water (6),
                        enhancedSalts (7),
                        naCl (8),
                        caCl (9),
                        mgCl (10),
                        cMA (11),
                        kAC (12),
                        naFormate (13),
                        naA (14)}
ACCESS      read-write
STATUS      mandatory
DESCRIPTION "<Definition>Indicates the type of treatment being applied to the
road. An enhanced definition of some of the values are as follows: other -
any other type of treatment water - used as a diluting agent cMA - Calcium-
Magnesium Acetate kAC - Potassium-Magnesium Acetate naFormate - Sodium
Formate naA - Sodium Acetate
<Informative>Version 02 of this standard incorrectly defined the set
constraint of this read-write object to be read-only; it should be always,
however, the intent is that it would only be set by a local connection when
the new product is being loaded and that remote systems would only read this
object.
<DescriptiveName>PavementTreatment.type:code
<Valid Value Rule>An enhanced definition of some of the values are as
follows.
other - any other type of treatment
water - used as a diluting agent
cMA - Calcium-Magnesium Acetate
kAC - Potassium-Magnesium Acetate
naFormate - Sodium Formate
naA - Sodium Acetate
<Data Concept Type>Data Element
<Object Identifier> 1.3.6.1.4.1.1206.4.2.5.2.11.2.1.2"
::= { essPavementTreatmentEntry 2 }
```

 © 2022 AASHTO / ITE / NEMA

5.13.3.3 Treatment Product Form

```
essPaveTreatProductForm OBJECT-TYPE
SYNTAX      INTEGER {   other (1),
                        dry (2),
                        prewet (3),
                        liquid (4)}
ACCESS      read-write
STATUS      mandatory
DESCRIPTION "<Definition>Indicates the condition of the treatment being
applied to the road.
<Informative>Version 02 and 03 of this standard incorrectly defined the set
constraint of this read-write object to be read-only; it should be always,
however, the intent is that it would only be set by a local connection when
the new product is being loaded and that remote systems would only read this
object.
<DescriptiveName>PavementTreatement.form:code
<Data Concept Type>Data Element
<Object Identifier> 1.3.6.1.4.1.1206.4.2.5.2.11.2.1.3"
::= { essPavementTreatmentEntry 3 }
```

5.13.3.4 Percentage of Treatment Type in Mix

```
essPercentProductMix OBJECT-TYPE
SYNTAX      INTEGER (0..100)
ACCESS      read-write
STATUS      mandatory
DESCRIPTION "<Definition>Indicates the percentage of the total application
mix by weight that is of the type specified in essPaveTreatProductType.
<Informative>Version 02 of this standard incorrectly defined the set
constraint of this read-write object to be read-only; it should be always,
however, the intent is that it would only be set by a local connection when
the new product is being loaded and that remote systems would only read this
object.
<DescriptiveName>PavementTreatment.mix:quantity
<Valid Value Rule>The sum of these percentages within the total mixture shall
equal 100.
<Data Concept Type>Data Element
<Unit>percent
<Object Identifier> 1.3.6.1.4.1.1206.4.2.5.2.11.2.1.4"
::= { essPavementTreatmentEntry 4 }
```

5.13.4 Treatment Amount

```
essPaveTreatmentAmount OBJECT-TYPE
SYNTAX      INTEGER (0..255)
ACCESS      read-write
STATUS      mandatory
DESCRIPTION "<Definition>Indicates quantity of the treatment being applied in
kilograms per lane kilometer.
<DescriptiveName>PavementTreatmentTable.amount:quantity
<Valid Value Rule>The value of 255 shall indicate an error condition or
missing value.
<Data Concept Type>Data Element
<Unit>kilograms per lane kilometer
<Object Identifier> 1.3.6.1.4.1.1206.4.2.5.2.11.3"
::=   { essNtcipTreatment 3 }
```

© 2022 AASHTO / ITE / NEMA Copy Per MIB Distribution Permission

5.13.5 Treatment Width

```
essPaveTreatmentWidth OBJECT-TYPE
SYNTAX      INTEGER (0..255)
ACCESS      read-write
STATUS      mandatory
DESCRIPTION "<Definition>Indicates the width of the spread of treatment in
meters.
<DescriptiveName>PavementTreatmentTable.width:quantity
<Valid Value Rule>The value of 255 shall indicate an error condition or
missing value.
<Data Concept Type>Data Element
<Unit>meters
<Object Identifier> 1.3.6.1.4.1.1206.4.2.5.2.11.4"
::=   { essNtcipTreatment 4 }
```

5.13.6 Pavement Treatment Block

```
-- This object has been deprecated. See Annex D.3.2 for more information.
pavementTreatmentBlock OBJECT-TYPE
SYNTAX      OerString
ACCESS      read-only
STATUS      mandatory
DESCRIPTION "<Definition>An OER encoded string of the Pavement Treatment
data. This object is used for uploading current pavement treatment data from
the ESS in a bandwidth efficient manner.

The OPTIONAL fields shall be present if the data is supported by the
implementation and is valid. The OPTIONAL fields shall be omitted for any
data that is invalid or not supported by the implementation.

Note: The following structure contains pts data elements in addition to the
ess data elements. Although these are not currently required to fulfill any
existing requirements, they are included to maintain backward compatibility
with the version 02 standard.

PavementTreatmentBlock ::= SEQUENCE {
      treatmentInfo     SEQUENCE OF PavementTreatmentData OPTIONAL,
      essPaveTreatmentAmount.0      OPTIONAL, -- @NTCIP1204-v03
      essPaveTreatmentWidth.0       OPTIONAL, -- @NTCIP1204-v03
      ptsOperationalMode.0          OPTIONAL, -- @NTCIP1204-v03
      ptsCommandState.0             OPTIONAL, -- @NTCIP1204-v03
      ptsSprayerState.0             OPTIONAL, -- @NTCIP1204-v03
      ptsSignalDuration.0           OPTIONAL, -- @NTCIP1204-v03
      ptsSignalEventCount.0         OPTIONAL, -- @NTCIP1204-v03
      ptsLastSignalEvent.0          OPTIONAL, -- @NTCIP1204-v03
      ptsActiveEventCount.0         OPTIONAL, -- @NTCIP1204-v03
      ptsInactiveEventCount.0       OPTIONAL, -- @NTCIP1204-v03
      ptsLastactiveEvent.0          OPTIONAL, -- @NTCIP1204-v03
      ptsLastInactiveEvent.0        OPTIONAL, -- @NTCIP1204-v03
      ptsError.0                    OPTIONAL, -- @NTCIP1204-v03
      ptsMonitoringDetectors.0      OPTIONAL  -- @NTCIP1204-v03
}

PavementTreatmentData ::=
      -- for (
```

 © 2022 AASHTO / ITE / NEMA

```
      --    x = 1;
      --    x < numEssTreatments.0;
      --    x++)
SEQUENCE {
      essPavementTreatmentIndex.x         OPTIONAL, -- @NTCIP1204-v03
      essPaveTreatProductType.x           OPTIONAL, -- @NTCIP1204-v03
      essPaveTreatProductForm.x           OPTIONAL, -- @NTCIP1204-v03
      essPercentProductMix.x              OPTIONAL  -- @NTCIP1204-v03
}
<DescriptiveName>PavementTreatmentTable.block:frame
<Data Concept Type>Data Element
<Object Identifier> 1.3.6.1.4.1.1206.4.2.5.2.11.5"
::=   { essNtcipTreatment 5 }
```

5.13.7 Operational Mode [Obsolete]

```
ptsOperationalMode OBJECT-TYPE
SYNTAX      INTEGER {   off (1),
                        manual (2),
                        automatic (3)}
ACCESS      read-write
STATUS      obsolete
DESCRIPTION "<Definition>Indicates the operational mode of the Pavement
Treatment System.

When in the 'off' state, the PTS shall not trigger the sprayer even if
commanded to do so and shall always be inactive. The PTS shall transition to
the requested operational mode, upon request.

When in the 'automatic' state, the PTS shall monitor conditions and trigger
the sprayer based on a manufacturer specific algorithm. The algorithm shall
only consider input from the detectors selected in the ptsMonitoringDetectors
object. The PTS shall also trigger the sprayer if commanded to do so via the
ptsCommandState object. The PTS shall transition to the requested operational
mode, upon request.

When in the 'manual' state, the PTS shall trigger the sprayer if commanded to
do so via the ptsCommandState object. The PTS shall transition to the
requested operational mode, upon request.
<DescriptiveName>PTS.operationalMode.code
<Valid Value Rule>
off   When set to this value the ESS does not trigger the
      bridge sprayer

manual      When set to this value the ESS only triggers the
      bridge sprayer when manually commanded to do
      so (e.g., see bridgeSprayerMgmtSignalState).

automatic   When set to this value the ESS triggers the
      bridge sprayer when manually commanded to do
      so or when the internal algorithm determines
      that the sprayer should be triggered.
<Data Concept Type>Data Element
<Object Identifier> 1.3.6.1.4.1.1206.4.2.5.2.11.6"
::=   { essNtcipTreatment 6 }
```

© 2022 AASHTO / ITE / NEMA

5.13.8 Command State [Obsolete]

```
ptsCommandState OBJECT-TYPE
SYNTAX      INTEGER {   other (1),
                        inactive (2),
                        activate (3)}
ACCESS      read-write
STATUS      obsolete
DESCRIPTION "<Definition>Indicates the operational state of the PTS. When in
the 'inactive' state, the PTS shall not be spraying. Upon entering the
'active' state, either by a manual SET of this object or through an automated
algorithm, the PTS shall trigger the sprayer and spray the chemical for a
duration as defined by the ptsSignalDuration object. Upon expiration of this
duration, the PTS shall automatically transition back to the 'inactive'
state.
<DescriptiveName>PTS.commandState:code
<Valid Value Rule>
other -
      read  - indicates a unknown or inital state
      write - no effect
inactive  -
      read  - indicates the ess is not signaling the bridge sprayer
      write - no effect
activate  -
      read  - indicates the ess is signaling the bridge sprayer
      write - causes the ess to signal the bridge sprayer
<Data Concept Type>Data Element
<Object Identifier> 1.3.6.1.4.1.1206.4.2.5.2.11.7"
::=   { essNtcipTreatment 7 }
```

5.13.9 Sprayer State

```
ptsSprayerState OBJECT-TYPE
SYNTAX      INTEGER {   other (1),
                        inactive (2),
                        active (3)}
ACCESS      read-only
STATUS      mandatory
DESCRIPTION "<Definition>other     - indicates a unknown or initial state
             inactive  - indicates the bridge sprayer is inactive
             active    - indicates the bridge sprayer is active
<DescriptiveName>PTS.sprayerState:code
<Data Concept Type>Data Element
<Object Identifier> 1.3.6.1.4.1.1206.4.2.5.2.11.8"
::=   { essNtcipTreatment 8 }
```

5.13.10 Signal Duration

```
ptsSignalDuration OBJECT-TYPE
SYNTAX      INTEGER (0..3600000)
ACCESS      read-write
STATUS      mandatory
DESCRIPTION "<Definition>The number of milliseconds of a simple logic level
or state the bridge sprayer needs to detect a signal from the ESS.
<DescriptiveName>PTS.signalDuration:quantity
<Data Concept Type>Data Element
<Unit>milliseconds
```

 © 2022 AASHTO / ITE / NEMA

```
<Object Identifier> 1.3.6.1.4.1.1206.4.2.5.2.11.9"
::=   { essNtcipTreatment 9 }
```

5.13.11 Signal Event Count

```
ptsSignalEventCount OBJECT-TYPE
SYNTAX      Counter
ACCESS      read-only
STATUS      mandatory
DESCRIPTION "<Definition>The count of the number of Signal Events that have
occurred.
<DescriptiveName>PTS.signalEventCount:quantity
<Data Concept Type>Data Element
<Unit>milliseconds
<Object Identifier> 1.3.6.1.4.1.1206.4.2.5.2.11.10"
::=   { essNtcipTreatment 10 }
```

5.13.12 Last Signal Event

```
ptsLastSignalEvent OBJECT-TYPE
SYNTAX      Counter
ACCESS      read-only
STATUS      mandatory
DESCRIPTION "<Definition>The number of seconds since 00:00:00 Jan 1 1970 UTC.
<DescriptiveName>PTS.lastSignalEvent:quantity
<Valid Value Rule>The value of 0 indicates an unknown or initial value.
<Data Concept Type>Data Element
<Unit>seconds
<Object Identifier> 1.3.6.1.4.1.1206.4.2.5.2.11.11"
::=   { essNtcipTreatment 11 }
```

5.13.13 Active Event Count

```
ptsActiveEventCount OBJECT-TYPE
SYNTAX      Counter
ACCESS      read-only
STATUS      mandatory
DESCRIPTION "<Definition>The count of the number of Active Events that have
occurred.
<DescriptiveName>PTS.activeEventCount:quantity
<Data Concept Type>Data Element
<Unit>count
<Object Identifier> 1.3.6.1.4.1.1206.4.2.5.2.11.12"
::=   { essNtcipTreatment 12 }
```

5.13.14 Inactive Event Count

```
ptsInactiveEventCount OBJECT-TYPE
SYNTAX      Counter
ACCESS      read-only
STATUS      mandatory
DESCRIPTION "<Definition>A count of the number of Inactive Events that have
occurred.
<DescriptiveName>PTS.inactiveEventCount:quantity
<Data Concept Type>Data Element
<Unit>count
```

© 2022 AASHTO / ITE / NEMA Copy Per MIB Distribution Permission

```
<Object Identifier> 1.3.6.1.4.1.1206.4.2.5.2.11.13"
::=   { essNtcipTreatment 13 }
```

5.13.15 Last Active Event

```
ptsLastActiveEvent OBJECT-TYPE
SYNTAX      Counter
ACCESS      read-only
STATUS      mandatory
DESCRIPTION "<Definition>The number of seconds since 00:00:00 Jan 1 1970 UTC.
<DescriptiveName>PTS.lastActiveEvent:quantity
<Valid Value Rule>The value of 0 indicates an unknown or initial value.
<Data Concept Type>Data Element
<Unit>seconds
<Object Identifier> 1.3.6.1.4.1.1206.4.2.5.2.11.14"
::=   { essNtcipTreatment 14 }
```

5.13.16 Last Inactive Event

```
ptsLastInactiveEvent OBJECT-TYPE
SYNTAX      Counter
ACCESS      read-only
STATUS      mandatory
DESCRIPTION "<Definition>The number of seconds since 00:00:00 Jan 1 1970 UTC.
<DescriptiveName>PTS.lastInactiveEvent:quantity
<Valid Value Rule>
The value of 0 indicates an unknown or initial value.
<Data Concept Type>Data Element
<Unit>seconds
<Object Identifier> 1.3.6.1.4.1.1206.4.2.5.2.11.15"
::=   { essNtcipTreatment 15 }
```

5.13.17 PTS Error Code

```
ptsError OBJECT-TYPE
SYNTAX      INTEGER { other (1),
                      ok (2),
                      genericError (3),
                      tankLow (4)}
ACCESS      read-only
STATUS      mandatory
DESCRIPTION "<Definition>Indicates the status of the bridge sprayer.
<DescriptiveName>PTS.error:code
<Valid Value Rule>
other        - indicates a unknown or initial state
ok           - indicates the bridge sprayer is operational
genericError - indicates the bridge sprayer has an error
tankLow      - indicates the bridge sprayer's tank is low
<Data Concept Type>Data Element
<Object Identifier> 1.3.6.1.4.1.1206.4.2.5.2.11.16"
::=   { essNtcipTreatment 16 }
```

5.13.18 Monitoring Detectors

```
ptsMonitoringDetectors OBJECT-TYPE
SYNTAX      OCTET STRING (SIZE (4))
```

 © 2022 AASHTO / ITE / NEMA

```
ACCESS      read-write
STATUS      mandatory
DESCRIPTION "<Definition>Indicates the pavement detectors that the PTS shall
use in its algorithm that determines when the PTS automatically triggers the
sprayer.
<DescriptiveName>PTS.monitoringDetectors:code
<Valid Value Rule>Each bit indicates whether or not the associated pavement
sensor shall be used within the algorithm. The first (high order) bit in the
bit string shall reference the first pavement sensor. A value of one for any
bit shall indicate that the sensor input shall be considered, and a value of
zero shall mean that the input shall not be considered.
<Data Concept Type>Data Element
<Object Identifier> 1.3.6.1.4.1.1206.4.2.5.2.11.17"
::=   { essNtcipTreatment 17 }
```

5.13.19 Operational Mode—Version 3

```
ptsOperationalModeV3 OBJECT-TYPE
SYNTAX      INTEGER {   off (1),
                        manual (2),
                        automatic (3)}
ACCESS      read-write
STATUS      mandatory
DESCRIPTION "<Definition>Indicates the operational mode of the Pavement
Treatment System.

When in the 'off' state, the PTS shall not trigger the sprayer even if
commanded to do so and shall always be inactive. The PTS shall transition to
the requested operational mode, upon request.

When in the 'automatic' state, the PTS shall monitor conditions and trigger
the sprayer based on a manufacturer specific algorithm. The algorithm shall
only consider input from the detectors selected in the ptsMonitoringDetectors
object. The PTS shall also trigger the sprayer if commanded to do so via the
ptsCommandStateV3 object. The PTS shall transition to the requested
operational mode, upon request.

When in the 'manual' state, the PTS shall trigger the sprayer if commanded to
do so via the ptsCommandStateV3 object. The PTS shall transition to the
requested operational mode, upon request.
<DescriptiveName>PTS.operationalMode.code
<Valid Value Rule>
off   When set to this value the ESS does not trigger the
      bridge sprayer

manual      When set to this value the ESS only triggers the
      bridge sprayer when manually commanded to do
      so (e.g., see ptsCommandStateV3).

automatic   When set to this value the ESS triggers the
      bridge sprayer when manually commanded to do
      so or when the internal algorithm determines
      that the sprayer should be triggered.
<Data Concept Type>Data Element
<Object Identifier> 1.3.6.1.4.1.1206.4.2.5.2.11.18"
::=   { essNtcipTreatment 18 }
```

© 2022 AASHTO / ITE / NEMA

5.13.20 Command State—Version 3

```
ptsCommandStateV3 OBJECT-TYPE
SYNTAX      INTEGER {   other (1),
                        inactive (2),
                        activate (3)}
ACCESS      read-write
STATUS      mandatory
DESCRIPTION "<Definition>Indicates the operational state of the PTS. When in
the 'inactive' state, the PTS shall not be signaling the sprayer. Upon
entering the 'active' state, either by a manual SET of this object or through
an automated algorithm, the PTS shall trigger the sprayer using a signal that
lasts for a duration as defined by the ptsSignalDuration object. Upon
expiration of this duration, the PTS shall automatically transition back to
the 'inactive' state.
<Informative>This object does not directly control the sprayer, rather it
merely signals an external sprayer.
<DescriptiveName>PTS.commandState:code
<Valid Value Rule>
other -
      read  - indicates a unknown or inital state
      write - no effect
inactive  -
      read  - indicates the ess is not signaling the bridge sprayer
      write - no effect
activate  -
      read  - indicates the ess is signaling the bridge sprayer
      write - causes the ess to signal the bridge sprayer
<Data Concept Type>Data Element
<Object Identifier> 1.3.6.1.4.1.1206.4.2.5.2.11.19"
::=   { essNtcipTreatment 19 }
```

5.13.21 PTS Latitude

```
essPavementTreatmentLatitude OBJECT-TYPE
SYNTAX      INTEGER (-90000000..90000001)
ACCESS      read-write
STATUS      mandatory
DESCRIPTION "<Definition>The latitude in 10^-6 degrees of the pavement
treatment system, per WGS-84 datum.
<DescriptiveName>PTS.latitude:quantity
<Valid Value Rule>The essPavementTreatmentLatitude at the North Pole is
90,000,000. The essPavementTreatmentLatitude at the South Pole is -
90,000,000. The value 90,000,001 shall indicate a missing value.
<Data Concept Type>Data Element
<Unit>latitude
<Object Identifier> 1.3.6.1.4.1.1206.4.2.5.2.11.20"
REFERENCE   "Resolution based on on-going location referencing activities;
the WMO Binary Code Form FM 94 BUFR Table B item 0 05 001 can be obtained by
dividing this value by 10."
::=   { essNtcipTreatment 20 }
```

5.13.22 PTS Longitude

```
essPavementTreatmentLongitude OBJECT-TYPE
SYNTAX      INTEGER (-180000000..180000001)
ACCESS      read-write
```

 © 2022 AASHTO / ITE / NEMA

```
STATUS      mandatory
DESCRIPTION "<Definition>The east longitude in 10^-6 degrees from the Prime
Meridian of the pavement treatment system location.
<DescriptiveName>RadiationSensor.longitude:quantity
<Valid Value Rule>The essPavementTreatmentLongitude of 180 degrees West shall
be -180,000,000. The essPavementTreatmentLongitude of 180 degrees East shall
be 180,000,000. The value 180,000,001 shall indicate a missing value.
<Data Concept Type>Data Element
<Unit>longitude
<Object Identifier> 1.3.6.1.4.1.1206.4.2.5.2.11.21"
REFERENCE   "Resolution based on on-going location referencing activities;
the WMO Binary Code Form FM 94 BUFR Table B item 0 06 001 can be obtained by
dividing this value by 10."
::=   { essNtcipTreatment 21 }
```

5.13.23 PTS Location

```
essPavementTreatmentLocation OBJECT-TYPE
SYNTAX      DisplayString (SIZE (0..255))
ACCESS      read-write
STATUS      mandatory
DESCRIPTION "<Definition>A textual string indicating the location of the
pavement treatment system.
<DescriptiveName>pts.location:text
<Data Concept Type>Data Element
<Object Identifier> 1.3.6.1.4.1.1206.4.2.5.2.11.22"
::= { essNtcipTreatment 22 }
```

5.13.24 PTS Model Information

```
essPavementTreatmentModelInformation OBJECT-TYPE
SYNTAX      INTEGER (0..255)
ACCESS      read-write
STATUS      mandatory
DESCRIPTION "<Definition>Indicates the row in the Module Table (See NTCIP
1201) that contains information about the make, model, and version number of
the pavement treatment system.
<DescriptiveName>pts.modelInformation:identifier
<Valid Value Rule>
The value of zero indicates that this information is not available.
<Data Concept Type>Data Element
<Object Identifier> 1.3.6.1.4.1.1206.4.2.5.2.11.23"
::= { essNtcipTreatment 23 }
```

5.14 Air Quality Parameters

```
-- Contains objects used for monitoring air quality conditions.
essNtcipAirQuality  OBJECT IDENTIFIER ::= { essNtcip 12 }
```

5.14.1 Carbon Monoxide Parameter

```
essCO OBJECT-TYPE
SYNTAX      INTEGER (0..255)
ACCESS      read-only
STATUS      mandatory
```

© 2022 AASHTO / ITE / NEMA

```
DESCRIPTION "<Definition>The concentration of carbon monoxide in the air,
measured in parts per million.
<DescriptiveName>AirQuality.carbonMonoxide:quantity
<Valid Value Rule>The value 255 shall indicate an error condition or missing
value.
<Data Concept Type>Data Element
<Unit>parts per million
<Object Identifier> 1.3.6.1.4.1.1206.4.2.5.2.12.1"
::=   { essNtcipAirQuality 1 }
```

5.14.2 Carbon Dioxide Parameter

```
-- This object has been deprecated. See Annex D.3.17 for more information.
essCO2 OBJECT-TYPE
SYNTAX      INTEGER (0..65535)
ACCESS      read-only
STATUS      deprecated
DESCRIPTION "<Definition>The concentration of carbon dioxide in the air,
measured in parts per billion.
<DescriptiveName>AirQuality.carbonDioxide:quantity
<Valid Value Rule>The value 65535 shall indicate an error condition or
missing value.
<Data Concept Type>Data Element
<Unit>parts per billion
<Object Identifier> 1.3.6.1.4.1.1206.4.2.5.2.12.2"
::=   { essNtcipAirQuality 2 }
```

5.14.3 Nitrous Oxide Parameter

```
-- This object has been deprecated. See Annex D.3.17 for more information.
essNO OBJECT-TYPE
SYNTAX      INTEGER (0..255)
ACCESS      read-only
STATUS      deprecated
DESCRIPTION "<Definition>The concentration of nitrous oxide in the air,
measured in parts per million.
<DescriptiveName>AirQuality.nitrousOxide:quantity
<Valid Value Rule>The value 255 shall indicate an error condition or missing
value.
<Data Concept Type>Data Element
<Unit>parts per million
<Object Identifier> 1.3.6.1.4.1.1206.4.2.5.2.12.3"
::=   { essNtcipAirQuality 3 }
```

5.14.4 Nitrogen Dioxide Parameter

```
essNO2 OBJECT-TYPE
SYNTAX      INTEGER (0..255)
ACCESS      read-only
STATUS      mandatory
DESCRIPTION "<Definition>The concentration of nitrogen dioxide in the air,
measured in parts per billion.
<DescriptiveName>AirQuality.nitrogenDioxide:quantity
<Valid Value Rule>The value 255 shall indicate an error condition or missing
value.
<Data Concept Type>Data Element
```

 © 2022 AASHTO / ITE / NEMA

```
<Unit>parts per billion
<Object Identifier> 1.3.6.1.4.1.1206.4.2.5.2.12.4"
::=   { essNtcipAirQuality 4 }
```

5.14.5 Sulfur Dioxide Parameter

```
essSO2 OBJECT-TYPE
SYNTAX      INTEGER (0..65535)
ACCESS      read-only
STATUS      mandatory
DESCRIPTION "<Definition>The concentration of sulfur dioxide in the air,
measured in parts per billion.
<DescriptiveName>AirQuality.sulfurDioxide:quantity
<Valid Value Rule>The value 65535 shall indicate an error condition or
missing value.
<Data Concept Type>Data Element
<Unit>parts per billion
<Object Identifier> 1.3.6.1.4.1.1206.4.2.5.2.12.5"
::=   { essNtcipAirQuality 5 }
```

5.14.6 Ozone Parameter

```
-- This object has been deprecated. See Annex D.3.17 for more information.
essO3 OBJECT-TYPE
SYNTAX      INTEGER (0..255)
ACCESS      read-only
STATUS      deprecated
DESCRIPTION "<Definition>The concentration of ozone in the air, measured in
parts per one hundred billion.
<DescriptiveName>AirQuality.ozone:quantity
<Valid Value Rule>The value 255 shall indicate an error condition or missing
value.
<Data Concept Type>Data Element
<Unit>parts per one hundred billion
<Object Identifier> 1.3.6.1.4.1.1206.4.2.5.2.12.6"
::=   { essNtcipAirQuality 6 }
```

5.14.7 Particulate Matter Parameter

```
essPM10 OBJECT-TYPE
SYNTAX      INTEGER (0..65535)
ACCESS      read-only
STATUS      mandatory
DESCRIPTION "<Definition>The concentration of small particulate matter of 10
micrometers or less in diameter in the air, measured in micrograms per cubic
meter.
<DescriptiveName>AirQuality.particulateMatter:quantity
<Valid Value Rule>The value 65535 shall indicate an error condition or
missing value.
<Data Concept Type>Data Element
<Unit>micrograms per cubic meter
<Object Identifier> 1.3.6.1.4.1.1206.4.2.5.2.12.7"
::=   { essNtcipAirQuality 7 }
```

© 2022 AASHTO / ITE / NEMA Copy Per MIB Distribution Permission

5.14.8 Air Quality Block Object

```
-- This object has been deprecated. See Annex D.3.2 for more information.
essAirQualityBlock OBJECT-TYPE
SYNTAX      OerString
ACCESS      read-only
STATUS      mandatory
DESCRIPTION "<Definition>An OER encoded string of the EssAirQualityData
structure as defined below. This object is used for uploading current air
quality data from the ESS in a bandwidth efficient manner.

A GET shall return data for all of the fields in the structure (even if they
are indicated as OPTIONAL); unless the data values are not supported by the
controller or are invalid (e.g., the sensor is not attached), in which case
the values shall be omitted.

essAirQualityData ::= SEQUENCE {
      essCO.0                       OPTIONAL,   -- @NTCIP1204-v03
      essCO2.0                      OPTIONAL,   -- @NTCIP1204-v03
      essNO.0                       OPTIONAL,   -- @NTCIP1204-v03
      essNO2.0                      OPTIONAL,   -- @NTCIP1204-v03
      essSO2.0                      OPTIONAL,   -- @NTCIP1204-v03
      essO3.0                       OPTIONAL,   -- @NTCIP1204-v03
      essPM10.0                     OPTIONAL    -- @NTCIP1204-v03
      }
<DescriptiveName>AirQuality.airQualityBlock:code
<Data Concept Type>Data Element
<Object Identifier> 1.3.6.1.4.1.1206.4.2.5.2.12.8"
::=   { essNtcipAirQuality 8 }
```

5.14.9 Particulate Matter (2.5) Parameter

```
essPM25 OBJECT-TYPE
SYNTAX      INTEGER (0..65535)
ACCESS      read-only
STATUS      mandatory
DESCRIPTION "<Definition>The concentration of small particulate matter of 2.5
micrometers or less in diameter in the air, measured in micrograms per cubic
meter.
<DescriptiveName>AirQuality.particulateMatter25:quantity
<Valid Value Rule>The value 65535 shall indicate an error condition or
missing value.
<Data Concept Type>Data Element
<Unit>micrograms per cubic meter
<Object Identifier> 1.3.6.1.4.1.1206.4.2.5.2.12.9"
::=   { essNtcipAirQuality 9 }
```

5.14.10 Number of Air Quality Sensors

```
airQualitySensorTableNumSensors OBJECT-TYPE
SYNTAX      INTEGER (0..255)
ACCESS      read-only
STATUS      mandatory
DESCRIPTION "<Definition>Indicates the number of entries in the air quality
sensor table.
```

Copy Per MIB Distribution Permission © 2022 AASHTO / ITE / NEMA

```
<Informative>This value may automatically change upon connecting or
disconnecting a sensor; however, the table is still defined as a static table
since the creation/deletion of rows is not managed through SNMP logic.
<DescriptiveName>AirQualitySensorTable.numSensors:quantity
<Data Concept Type>Data Element
<Unit>count
<Object Identifier> 1.3.6.1.4.1.1206.4.2.5.2.12.10"
::=   { essNtcipAirQuality 10 }
```

5.14.11 Air Quality Sensor Table

```
airQualitySensorTable OBJECT-TYPE
SYNTAX      SEQUENCE OF AirQualitySensorEntry
ACCESS      not-accessible
STATUS      mandatory
DESCRIPTION "<Definition>Table containing the air quality sensor data.
<DescriptiveName>AirQualitySensorTable
<Data Concept Type>Class
<TableType>static
<Object Identifier> 1.3.6.1.4.1.1206.4.2.5.2.12.11"
::=   { essNtcipAirQuality 11 }
```

5.14.12 Air Quality Sensor

```
airQualitySensorEntry OBJECT-TYPE
SYNTAX      AirQualitySensorEntry
ACCESS      not-accessible
STATUS      mandatory
DESCRIPTION "<Definition>An air quality sensor is described through a number
of attributes as indicated by the following subclauses.
<DescriptiveName>AirQualitySensor
<Data Concept Type>Class"
INDEX { airQualitySensorIndex }
::=   { airQualitySensorTable 1 }

AirQualitySensorEntry ::= SEQUENCE {
      airQualitySensorIndex               INTEGER,
      airQualitySensorHeight              INTEGER,
      airQualitySensorLatitude            INTEGER,
      airQualitySensorLongitude           INTEGER,
      airQualitySensorLocation            DisplayString,
      airQualitySensorModelInformation    INTEGER}
```

5.14.12.1 Air Quality Sensor Index

```
airQualitySensorIndex OBJECT-TYPE
SYNTAX      INTEGER (1..255)
ACCESS      read-only
STATUS      mandatory
DESCRIPTION "<Definition>Enumerated list of row entries that provide air
quality sensor data.
<DescriptiveName>AirQualitySensor.index:identifier
<Data Concept Type>Data Element
<Object Identifier> 1.3.6.1.4.1.1206.4.2.5.2.12.11.1.1"
::= { airQualitySensorEntry 1 }
```

© 2022 AASHTO / ITE / NEMA Copy Per MIB Distribution Permission

5.14.12.2 Air Quality Sensor Height

```
airQualitySensorHeight OBJECT-TYPE
SYNTAX      INTEGER (-1000..1001)
ACCESS      read-write
STATUS      mandatory
DESCRIPTION "<Definition>The height of the air quality sensor with respect to
the essReferenceHeight in meters.
<DescriptiveName>AirQualitySensor.height:quantity
<Valid Value Rule>The value of 1001 shall indicate a missing value.
<Data Concept Type>Data Element
<Unit>meters
<Object Identifier> 1.3.6.1.4.1.1206.4.2.5.2.12.11.1.2"
REFERENCE   "essReferenceHeight plus this value equals the WMO Binary Code
Form FM 94 BUFR Table B item 0 07 001."
::=   { airQualitySensorEntry 2 }
```

5.14.12.3 Air Quality Sensor Latitude

```
airQualitySensorLatitude OBJECT-TYPE
SYNTAX      INTEGER (-90000000..90000001)
ACCESS      read-write
STATUS      mandatory
DESCRIPTION "<Definition>The latitude in 10^-6 degrees of the ESS air quality
sensor, per WGS-84 datum.
<DescriptiveName>AirQualitySensor.latitude:quantity
<Valid Value Rule>
The airQualitySensorLatitude at the North Pole is 90,000,000. The
airQualitySensorLatitude at the South Pole is -90,000,000. The value
90,000,001 shall indicate a missing value.
<Data Concept Type>Data Element
<Unit>latitude
<Object Identifier> 1.3.6.1.4.1.1206.4.2.5.2.12.11.1.3"
REFERENCE   "Resolution based on on-going location referencing activities;
the WMO Binary Code Form FM 94 BUFR Table B item 0 05 001 can be obtained by
dividing this value by 10."
::=   { airQualitySensorEntry 3 }
```

5.14.12.4 Air Quality Sensor Longitude

```
airQualitySensorLongitude OBJECT-TYPE
SYNTAX      INTEGER (-180000000..180000001)
ACCESS      read-write
STATUS      mandatory
DESCRIPTION "<Definition>The east longitude in 10^-6 degrees from the Prime
Meridian of the ESS air quality sensor location.
<DescriptiveName>AirQualitySensor.longitude:quantity
<Valid Value Rule>The airQualityLongitude of 180 degrees West shall be -
180,000,000. The airQualityLongitude of 180 degrees East shall be
180,000,000. The value 180,000,001 shall indicate a missing value.
<Data Concept Type>Data Element
<Unit>longitude
<Object Identifier> 1.3.6.1.4.1.1206.4.2.5.2.12.11.1.4"
REFERENCE   "Resolution based on on-going location referencing activities;
the WMO Binary Code Form FM 94 BUFR Table B item 0 06 001 can be obtained by
dividing this value by 10."
::=   { airQualitySensorEntry 4 }
```

Copy Per MIB Distribution Permission © 2022 AASHTO / ITE / NEMA

5.14.12.5 Air Quality Sensor Location

```
airQualitySensorLocation OBJECT-TYPE
SYNTAX      DisplayString (SIZE (0..255))
ACCESS      read-write
STATUS      mandatory
DESCRIPTION "<Definition>A textual string indicating the location of the air
quality sensor.
<DescriptiveName>AirQualitySensor.location:text
<Data Concept Type>Data Element
<Object Identifier> 1.3.6.1.4.1.1206.4.2.5.2.12.11.1.5"
::= { airQualitySensorEntry 5 }
```

5.14.12.6 Air Quality Sensor Model Information

```
airQualitySensorModelInformation OBJECT-TYPE
SYNTAX      INTEGER (0..255)
ACCESS      read-write
STATUS      mandatory
DESCRIPTION "<Definition>Indicates the row in the Module Table (See NTCIP
1201) that contains information about the make, model, and version number of
the sensor associated with this row of the AirQuality Sensor Table.
<DescriptiveName>AirQualitySensor.modelInformation:identifier
<Valid Value Rule>The value of zero indicates that this information is not
available.
<Data Concept Type>Data Element
<Object Identifier> 1.3.6.1.4.1.1206.4.2.5.2.12.11.1.6"
::= { airQualitySensorEntry 6 }
```

5.14.13 Carbon Dioxide Version 4 Parameter

```
essCO2V4 OBJECT-TYPE
SYNTAX      INTEGER (0..65535)
ACCESS      read-only
STATUS      mandatory
DESCRIPTION "<Definition>The concentration of carbon dioxide in the air,
measured in parts per million.
<DescriptiveName>AirQuality.carbonDioxideV4:quantity
<Valid Value Rule>The value 65535 shall indicate an error condition or
missing value.
<Data Concept Type>Data Element <Unit>parts per million
<Object Identifier> 1.3.6.1.4.1.1206.4.2.5.2.12.13"
::= { essNtcipAirQuality 13 }
```

5.14.14 Nitric Oxide Version 4 Parameter

```
essNOV4 OBJECT-TYPE
SYNTAX      INTEGER (0..255)
ACCESS      read-only
STATUS      mandatory
DESCRIPTION "<Definition>The concentration of nitric oxide in the air,
measured in parts per billion.
<DescriptiveName>AirQuality.nitricOxideV4:quantity
<Valid Value Rule>The value 255 shall indicate an error condition or missing
value.
```

© 2022 AASHTO / ITE / NEMA Copy Per MIB Distribution Permission

```
<Data Concept Type>Data Element <Unit>parts per billion
<Object Identifier> 1.3.6.1.4.1.1206.4.2.5.2.12.14"
::= { essNtcipAirQuality 14 }
```

5.14.15 Ozone Version 4 Parameter

```
essO3V4 OBJECT-TYPE
SYNTAX      INTEGER (0..65535)
ACCESS      read-only
STATUS      mandatory
DESCRIPTION "<Definition>The concentration of ozone in the air, measured in
parts per billion.
<DescriptiveName>AirQuality.ozoneV4:quantity
<Valid Value Rule>The value 65535 shall indicate an error condition or
missing value.
<Data Concept Type>Data Element
<Unit>parts per billion
<Object Identifier> 1.3.6.1.4.1.1206.4.2.5.2.12.15"
::= { essNtcipAirQuality 15 }
```

5.15 Water Quality Parameters

```
--This node contains objects used for monitoring water quality
-- conditions. Reserved for future use.
essNtcipWaterQuality OBJECT IDENTIFIER ::= { essNtcip 13 }
```

5.16 Snapshot Parameters

```
-- Contains objects used to describe the snapshot camera feature
essNtcipSnapshot  OBJECT IDENTIFIER ::= { essNtcip 14 }
```

5.16.1 Number of Snapshot Cameras

```
essSnapshotNumberOfCameras OBJECT-TYPE
SYNTAX      INTEGER (0..255)
ACCESS      read-only
STATUS      mandatory
DESCRIPTION "<Definition>Indicates the number of cameras that can be utilized
for capturing snapshots on the ESS.
<Informative>This value may automatically change upon connecting or
disconnecting a camera; however, the table is still defined as a static table
since the creation/deletion of rows is not managed through SNMP logic.
<DescriptiveName>SnapshotCameraTable.numCameras:quantity
<Data Concept Type>Data Element
<Object Identifier> 1.3.6.1.4.1.1206.4.2.5.2.14.1"
::=   { essNtcipSnapshot 1 }
```

5.16.2 Snapshot Camera Table

```
essSnapshotCameraTable OBJECT-TYPE
SYNTAX      SEQUENCE OF EssSnapshotCameraEntry
ACCESS      not-accessible
STATUS      mandatory
DESCRIPTION "<Definition>The snapshot camera table provides summary
information about the snapshot cameras supported by the ESS. It can be
```

 © 2022 AASHTO / ITE / NEMA

```
described through a number of attributes as indicated by the following
subclauses.
<DescriptiveName>SnapshotCameraTable
<Data Concept Type>Class
<TableType>static
<Object Identifier> 1.3.6.1.4.1.1206.4.2.5.2.14.2"
::=   { essNtcipSnapshot 2 }
```

5.16.3 Snapshot Camera

```
essSnapshotCameraEntry OBJECT-TYPE
SYNTAX      EssSnapshotCameraEntry
ACCESS      not-accessible
STATUS      mandatory
DESCRIPTION "<Definition>A snapshot camera is a camera that is able to
capture a picture and store it within the device's memory as a file. It can
be described through a number of attributes as indicated by the following
subclauses.
<DescriptiveName>SnapshotCamera
<Data Concept Type>Class"
INDEX { essSnapshotCameraIndex }
::=   { essSnapshotCameraTable 1 }

EssSnapshotCameraEntry ::= SEQUENCE {
      essSnapshotCameraIndex        INTEGER,
      essSnapshotCameraDescription  DisplayString,
      essSnapshotCameraStoragePath  DisplayString,
      essSnapshotCameraCommand      INTEGER,
      essSnapshotCameraError        INTEGER,
      essSnapshotCameraFilename     OCTET STRING }
```

5.16.3.1 Snapshot Camera Index

```
essSnapshotCameraIndex OBJECT-TYPE
SYNTAX      INTEGER (1..255)
ACCESS      read-only
STATUS      mandatory
DESCRIPTION "<Definition>Indicates the row number of this entry.
<DescriptiveName>SnapshotCamera.index:identifier
<Data Concept Type>Data Element
<Object Identifier> 1.3.6.1.4.1.1206.4.2.5.2.14.2.1.1"
::= { essSnapshotCameraEntry 1 }
```

5.16.3.2 Snapshot Camera Description

```
essSnapshotCameraDescription OBJECT-TYPE
SYNTAX      DisplayString (SIZE(1..255))
ACCESS      read-write
STATUS      mandatory
DESCRIPTION "<Definition>Indicates the description of this entry. The
description should include information about the location, direction (for
fixed cameras), and subject of the camera.
<DescriptiveName>SnapshotCamera.description:text
<Data Concept Type>Data Element
<Object Identifier> 1.3.6.1.4.1.1206.4.2.5.2.14.2.1.2"
::= { essSnapshotCameraEntry 2 }
```

© 2022 AASHTO / ITE / NEMA Copy Per MIB Distribution Permission

5.16.3.3 Snapshot Camera Storage Path

```
essSnapshotCameraStoragePath OBJECT-TYPE
SYNTAX      DisplayString (SIZE(1..255))
ACCESS      read-only
STATUS      mandatory
DESCRIPTION "<Definition>Indicates the storage path of snapshots taken from
this camera. The path indicated here shall be relative to the FTP login root.
This path can only include the FTP login root and its subdirectories and
cannot include any parent directories that may exist. The root is specified
by the string '/' (one forward slash. A subdirectory from the root may be
specified by the string '/subdir'.
<DescriptiveName>SnapshotCamera.storagePath:text
<Data Concept Type>Data Element
<Object Identifier> 1.3.6.1.4.1.1206.4.2.5.2.14.2.1.3"
DEFVAL { "/" }
::= { essSnapshotCameraEntry 3 }
```

5.16.3.4 Snapshot Camera Command

```
essSnapshotCameraCommand OBJECT-TYPE
SYNTAX      INTEGER {   ready(1),
                        captureSnapshot(2) }
ACCESS      read-write
STATUS      mandatory
DESCRIPTION "<Definition>A command to control the snapshot feature of the
ESS. Setting this object to a value of captureSnapshot(2) commands the ESS to
take a snapshot and save the image to memory. A Get of this object returns a
value of captureSnapshot(2) while the ESS is in the process of capturing and
saving the image to memory. A Get of this object when the ESS is not in the
process of capturing and saving the image to memory returns a value of
ready(1). If any errors occur in the process of capturing and saving the
image they shall be noted in essSnapshotError.
<Informative>Version 02 of this standard had a typo for the ACCESS; this
object is required tobe read-write for the camera to capture a snapshot
image.
<SetConstraint> Can only be set to 'captureSnapshot' when value is currently
'ready'; any other SET shall return a genErr, including a SET to 'ready'.
<DescriptiveName>SnapshotCamera.command:code
<Data Concept Type>Data Element
<Object Identifier> 1.3.6.1.4.1.1206.4.2.5.2.14.2.1.4"
::= { essSnapshotCameraEntry 4 }
```

5.16.3.5 Snapshot Camera Error

```
essSnapshotCameraError OBJECT-TYPE
SYNTAX      INTEGER {   none(1),
                        hardware(2),
                        insufficientMemory(3) }
ACCESS      read-only
STATUS      mandatory
DESCRIPTION "<Definition>Indicates the status of the last attempt to capture
a snapshot using essSnapshotCommand.
<DescriptiveName>SnapshotCamera.error:code
<Valid Value Rule>
```

 © 2022 AASHTO / ITE / NEMA

```
none - no error was detected
hardware - an error occurred with the camera hardware when attempting to
capture a picture.
insufficientMemory - the ESS does not have sufficient memory to store the new
picture.
<Data Concept Type>Data Element
<Object Identifier> 1.3.6.1.4.1.1206.4.2.5.2.14.2.1.5"
::= { essSnapshotCameraEntry 5 }
```

5.16.3.6 Snapshot Camera Filename

```
-- EDITORS NOTE. In 2008, the ESS WG was considering a comment to revise the
-- syntax to OCTET STRING (SIZE (1..255)) to prevent zero-length names.
-- Also, to add a DEFVAL clause to initialize the value to 'x'.
-- A note of caution has been added to the informative subfield.
-- This revision may require deprecation of this object in a future version.

essSnapshotCameraFilename OBJECT-TYPE
SYNTAX      OCTET STRING (SIZE(0..255))
ACCESS      read-write
STATUS      mandatory
DESCRIPTION "<Definition>Indicates the filename used when storing new
snapshot images. This parameter shall only consist of upper and lower case
characters (A-Z, a-z), digits (0-9), underscores (_), periods (.), spaces,
and the following case-sensitive field names enclosed in chevrons (<>):

camera: A three digit camera number equal to essSnapshotCameraIndex.
sequence: A three digit value that increments by one each time this
      camera is used to take a picture. This value shall roll-over from '999'
      to '000'. The initial value of this field and its value after a power
      outage is manufacture dependent.
date: A six digit code indicating the UTC date in the format of YYMMDD.
time: A six digit code indicating the UTC time in the format of HHMMSS.

All implementations shall support all static character filenames with up to
eight characters in the base filename, a period, and up to three characters
in the filename extension. Support for longer filenames and the above fields
are optional.

For example, if this parameter has a value of 'latest.jpg', every snapshot
taken is saved to 'latest.jpg' and overwrites any previous image saved to
that filename. If this parameter has a value of '<date> <sequence>.jpg', each
snapshot has a name (e.g., '060925 038') indicating the date it was taken
along with a relatively unique code. While the second form prevents the
inadvertent overwriting of filenames, it increases the likelihood of
consuming large amounts of field device memory (eventually resulting in
insufficientMemory errors) if not properly managed by the management station.

<Informative>The filename does not necessarily define file format and it is
left to the users to define an appropriate filename. For example, this object
may be set to a value of 'latest.bmp'. All implementations would be required
to save their images with this filename; however, the image saved may vary.
Some implementations may only save bitmapped images and the file would have
an appropriate name. Other implementations may only save JPEG images and the
'.bmp' extension may be confusing. Other implementations may support both
formats and use the extension in this field to select the storage format,
```

© 2022 AASHTO / ITE / NEMA Copy Per MIB Distribution Permission

while yet others may support both formats but ignore the extension assigned by this field (and use some other mechanism to select the storage format).

A zero length filename may result in unexpected operations. An implementation may reject a zero length filename by responding with genErr.
<DescriptiveName>SnapshotCamera.filename:text
<Data Concept Type>Data Element
<Object Identifier> 1.3.6.1.4.1.1206.4.2.5.2.14.2.6"
::= { essSnapshotCameraEntry 6 }

5.17 Snapshot

A snapshot is an image captured in a computer file. It can be described through a number of attributes as indicated. However, these objects are not SNMP Objects.

5.17.1 Filename [Deprecated in v04]

<Definition> Note: This object is deprecated in v04. See Annex F.5.1. The name of the file in which the snapshot image is stored.
<Descriptive Name> Snapshot.filename:text
<Data Concept Type> Data Element

5.17.2 Image [Deprecated in v04]

<Definition> Note: This object is deprecated in v04. See Annex F.5.2. The graphic snapshot image. The storage format is not defined by this standard.
<DescriptiveName>Snapshot.image:frame
<Data Concept Type> Data Element

 © 2022 AASHTO / ITE / NEMA

Annex A
Requirements Traceability Matrix (RTM) [Normative]

The Requirements Traceability Matrix (RTM) links the Functional Requirements as presented in Section 3 with the corresponding Dialogs (Section 4.2) on the same (gray) line. Each Functional Requirement/Dialog relates/uses one or more groups of Objects. The Objects (also known as Data Elements) are listed to the side; the formal definition of each object is contained within Section 5. Using this table, each Functional Requirement can thus be traced in a standardized way.

> Note: The INDEX objects into any of the tables are not explicitly exchanged but are used as index values for other objects that are exchanged.

The audience for this table is implementers (vendors and central system developers) and conformance testers. Additionally, other interested parties might use this table to determine how particular functions are to be implemented using the standardized dialogs, interfaces, and object definitions.

To conform to a Functional Requirement, an ESS shall implement all Objects and Dialogs traced from that Functional Requirement; a Management Station shall implement all Dialogs traced from the Functional Requirement. In order to be consistent with a Functional Requirement, a Management Station shall be able to fulfill the Functional Requirement using only Objects and Dialogs that a conforming ESS is required to support.

Section 3.6 defines Supplemental Requirements, which are refining other functional requirements. These functional requirements in turn are generally traced to design elements (e.g., rather than being directly traced to design elements).

A.1 Notation [Informative]

A.1.1 Functional Requirement Columns

The functional requirements are defined within Section 3 and the RTM is based upon the requirements within that Section. The section number and the functional requirement name are indicated within these columns.

A.1.2 Dialog Column

The standardized dialogs are defined within Section 4 and the RTM references the traces from requirements to this dialog. The section number of the dialog is indicated within this column.

© 2018 AASHTO / ITE / NEMA

A.1.3 Object Columns

The objects are defined within Section 5 of NTCIP 1204 v04 and Section 2 of NTCIP 1201. The RTM references the data objects that are referenced by the dialog. The section number and object name are indicated within these columns.

A.1.4 Additional Specifications

The "Additional Specifications" column may (and should) be used to provide additional notes and requirements about the dialog or may be used by an implementer to provide any additional details about the implementation.

A.2 Instructions for Completing the RTM [Informative]

To find the standardized design content for a functional requirement, search for the requirement identification number and functional requirement under the functional requirements columns. Next to the functional requirements column is a dialog identification number, identifying either a generic dialog (found in Annex G) or a specified dialog (found in Section 4.2) to be used to fulfill that requirement. To the right of the dialog identification number are the identification number and name of the data objects that are referenced or used by the dialog to fulfill the functional requirement. Object definitions specific to NTCIP 1204 v04 can be found in Section 5. If an object is defined in a different standard, that standard shall be listed first, followed by the section number where the object definition can be found. The "Additional Specifications" column provides additional notes or details about the design content.

A.3 Requirements Traceability Matrix (RTM) Table

Requirements Traceability Matrix (RTM)					
FR ID	**Functional Requirement**	**Dialog ID**	**Object ID**	**Object Name**	**Additional Specifications**
3.4	**Architectural Requirements**				
3.5	**Data Exchange and Operational Environment Requirements**				
3.5.1	ESS Manager Requirements				
3.5.1.1	ESS Configuration Requirements				
3.5.1.1.1	Retrieve ESS Characteristics	G.1			
			5.2.1	essNtcipCategory	
			5.2.2	essNtcipSiteDescription	
			5.3.1	essTypeofStation	
			5.4.1	essLatitude	
			5.4.2	essLongitude	
			5.5.1	essReferenceHeight	
3.5.1.1.2	Retrieve Compressed Station Metadata [Version 03 - Deprecated in v04]				See 3.5.4.17.

© 2018 AASHTO / ITE / NEMA

Requirements Traceability Matrix (RTM)					
FR ID	**Functional Requirement**	**Dialog ID**	**Object ID**	**Object Name**	**Additional Specifications**
3.5.1.1.3	Configure ESS Manager	G.3			
			5.2.2	essNtcipSiteDescription	
3.5.1.2	ESS Status Monitoring Requirements				
3.5.1.2.1	Retrieve ESS Door Status	G.1			
			5.3.2	essDoorStatus	
3.5.1.2.2	Retrieve Battery Status	G.1			
			5.3.3	essBatteryStatus	
3.5.1.2.3	Retrieve Line Volts	G.1			
			5.3.4	essLineVolts	
3.5.1.2.4	Retrieve ESS Status	G.1			
			5.3.10	essStatus	
3.5.1.3	ESS Data Retrieval Requirements				
3.5.1.3.1	Retrieve Mobile ESS Movement	G.1			
			5.4.1	essLatitude	
			5.4.2	essLongitude	
			5.4.3	essVehicleSpeed	
			5.4.4	essVehicleBearing	
			5.4.5	essOdometer	
			5.5.1	essReferenceHeight	
3.5.1.3.2	Retrieve Mobile Treatment Information [Obsolete]				
3.5.1.3.3	Retrieve Compressed Mobile ESS Data [Version 03 - Deprecated in v04]				See 3.5.4.18.
3.5.1.4	ESS Control Requirements				
3.5.2	Sensor Manager Requirements				
3.5.2.1	Sensor Configuration Requirements				
3.5.2.1.1	Retrieve Atmospheric Pressure Height [Versions 01 to 03 Only - Deprecated in v04]				See 3.5.4.19.

© 2018 AASHTO / ITE / NEMA
Copy Per RTM Distribution Permission

Requirements Traceability Matrix (RTM)					
FR ID	**Functional Requirement**	**Dialog ID**	**Object ID**	**Object Name**	**Additional Specifications**
3.5.2.1.2	Retrieve Metadata for Each Wind Sensor - Text Description	F.3.2.1			
			5.6.8	windSensorTableNumSensors	
			5.6.10.1	windSensorIndex	
			5.6.10.2	windSensorHeight	
			5.6.10.3	windSensorLocation	
3.5.2.1.3	Retrieve Temperature Sensor Metadata - Height	F.3.2.1			
			5.7.1	essNumTemperatureSensors	
			5.7.3.1	essTemperatureSensorIndex	
			5.7.3.2	essTemperatureSensorHeight	
3.5.2.1.4	Retrieve Pavement Sensor Metadata	F.3.2.1			
			5.11.1	numEssPavementSensors	
			5.11.3.1	essPavementSensorIndex	
			5.11.3.2	essPavementSensorLocation	
			5.11.3.3	essPavementType	
			5.11.3.4	essPavementElevation	
			5.11.3.5	essPavementExposure	
			5.11.3.6	essPavementSensorType	
3.5.2.1.5	Retrieve Subsurface Sensor Metadata - Text Description	F.3.2.1			
			5.11.4	numEssSubSurfaceSensors	
			5.11.6.1	essSubSurfaceSensorIndex	
			5.11.6.2	essSubSurfaceSensorLocation	
			5.11.6.3	essSubSurfaceType	
			5.11.6.4	essSubSurfaceSensorDepth	
3.5.2.1.6	Configure Pavement Sensor	F.3.2.3			
			5.11.2	essPavementSensorTable	
			5.11.3.1	essPavementSensorIndex	
			5.11.3.2	essPavementSensorLocation	
			5.11.3.3	essPavementType	
			5.11.3.5	essPavementExposure	
3.5.2.1.7	Configure Subsurface Sensor - Text Description	F.3.2.3			

Copy Per RTM Distribution Permission
© 2018 AASHTO / ITE / NEMA

Requirements Traceability Matrix (RTM)					
FR ID	**Functional Requirement**	**Dialog ID**	**Object ID**	**Object Name**	**Additional Specifications**
			5.11.6.1	essSubSurfaceSensorIndex	
			5.11.6.2	essSubSurfaceSensorLocation	
			5.11.6.3	essSubSurfaceType	
			5.11.6.4	essSubSurfaceSensorDepth	
3.5.2.1.8	Configure Passive Ice Detection Logic	4.2.8			
			5.13.1	numEssTreatments	
			5.13.3.1	essPavementTreatmentIndex	
			5.13.3.2	essPaveTreatProductType	
			5.13.3.3	essPaveTreatProductForm	
			5.13.3.4	essPercentProductMix	
3.5.2.1.9	Configure Snapshot Camera	4.2.10			
			5.16.3.1	essSnapshotCameraIndex	
			5.16.3.2	essSnapshotCameraDescription	
			5.16.3.6	essSnapshotCameraFilename	
3.5.2.1.10	Manage Atmospheric Pressure Metadata				
3.5.2.1.10.1	Retrieve Atmospheric Pressure Metadata - Location	F.3.2.1			
			5.5.5	essNumPressureSensors	
			5.5.7.1	essPressureSensorIndex	
			5.5.7.2	essPressureSensorHeight	
			5.5.7.3	essPressureSensorLatitude	
			5.5.7.4	essPressureSensorLongitude	
			5.5.7.5	essPressureSensorLocation	
3.5.2.1.10.2	Retrieve Atmospheric Pressure Metadata - Sensor Information	F.3.2.1			
			5.5.5	essNumPressureSensors	
			5.5.7.1	essPressureSensorIndex	
			5.5.7.6	essPressureSensorModelInformation	
3.5.2.1.10.3	Configure Atmospheric Pressure Metadata - Location	F.3.2.3			
			5.5.7.1	essPressureSensorIndex	
			5.5.7.2	essPressureSensorHeight	

© 2018 AASHTO / ITE / NEMA
Copy Per RTM Distribution Permission

Requirements Traceability Matrix (RTM)					
FR ID	**Functional Requirement**	**Dialog ID**	**Object ID**	**Object Name**	**Additional Specifications**
			5.5.7.3	essPressureSensorLatitude	
			5.5.7.4	essPressureSensorLongitude	
			5.5.7.5	essPressureSensorLocation	
3.5.2.1.11	Manage Wind Sensor Metadata				
3.5.2.1.11.1	Retrieve Metadata for Each Wind Sensor - Location	F.3.2.1			
			5.6.8	windSensorTableNumSensors	
			5.6.10.1	windSensorIndex	
			5.6.10.11	windSensorLatitude	
			5.6.10.12	windSensorLongitude	
3.5.2.1.11.2	Retrieve Metadata for Each Wind Sensor - Sensor Information	F.3.2.1			
			5.6.8	windSensorTableNumSensors	
			5.6.10.1	windSensorIndex	
			5.6.10.13	windSensorModelInformation	
3.5.2.1.11.3	Configure Wind Sensor Metadata - Location	F.3.2.3			
			5.6.10.1	windSensorIndex	
			5.6.10.2	windSensorHeight	
			5.6.10.3	windSensorLocation	
			5.6.10.11	windSensorLatitude	
			5.6.10.12	windSensorLongitude	
3.5.2.1.12	Manage Temperature Sensor Metadata				
3.5.2.1.12.1	Retrieve Temperature Sensor Metadata - Location	F.3.2.1			
			5.7.1	essNumTemperatureSensors	
			5.7.3.1	essTemperatureSensorIndex	
			5.7.3.2	essTemperatureSensorHeight	
			5.7.3.4	essTemperatureSensorLatitude	
			5.7.3.5	essTemperatureSensorLongitude	
			5.7.3.6	essTemperatureSensorLocation	
3.5.2.1.12.2	Retrieve Temperature Sensor Metadata - Sensor Information	F.3.2.1			
			5.7.1	essNumTemperatureSensors	

Copy Per RTM Distribution Permission
© 2018 AASHTO / ITE / NEMA

Requirements Traceability Matrix (RTM)					
FR ID	**Functional Requirement**	**Dialog ID**	**Object ID**	**Object Name**	**Additional Specifications**
			5.7.3.1	essTemperatureSensorIndex	
			5.7.3.7	essTemperatureSensorModelInformation	
3.5.2.1.12.3	Configure Temperature Sensor Metadata - Location	F.3.2.3			
			5.7.3.1	essTemperatureSensorIndex	
			5.7.3.2	essTemperatureSensorHeight	
			5.7.3.4	essTemperatureSensorLatitude	
			5.7.3.5	essTemperatureSensorLongitude	
			5.7.3.6	essTemperatureSensorLocation	
3.5.2.1.13	Manage Humidity Sensor Metadata				
3.5.2.1.13.1	Retrieve Humidity Sensor Metadata - Location	F.3.2.1			
			5.8.25	humiditySensorTableNumSensors	
			5.8.27.1	humiditySensorIndex	
			5.8.27.2	humiditySensorHeight	
			5.8.27.3	humiditySensorLatitude	
			5.8.27.4	humiditySensorLongitude	
			5.8.27.5	humiditySensorLocation	
3.5.2.1.13.2	Retrieve Humidity Sensor Metadata - Sensor Information	F.3.2.1			
			5.8.25	humiditySensorTableNumSensors	
			5.8.27.1	humiditySensorIndex	
			5.8.27.6	humiditySensorModelInformation	
3.5.2.1.13.3	Configure Humidity Sensor Metadata - Location	F.3.2.3			
			5.8.27.1	humiditySensorIndex	
			5.8.27.2	humiditySensorHeight	
			5.8.27.3	humiditySensorLatitude	
			5.8.27.4	humiditySensorLongitude	
			5.8.27.5	humiditySensorLocation	
3.5.2.1.14	Manage Precipitation Sensor Metadata				
3.5.2.1.14.1	Retrieve Precipitation Sensor Metadata - Location	F.3.2.1			

© 2018 AASHTO / ITE / NEMA
Copy Per RTM Distribution Permission

Requirements Traceability Matrix (RTM)					
FR ID	**Functional Requirement**	**Dialog ID**	**Object ID**	**Object Name**	**Additional Specifications**
			5.8.22	precipitationSensorTableNumSensors	
			5.8.24.1	precipitationSensorIndex	
			5.8.24.2	precipitationSensorHeight	
			5.8.24.3	precipitationSensorLatitude	
			5.8.24.4	precipitationSensorLongitude	
			5.8.24.5	precipitationSensorLocation	
3.5.2.1.14.2	Retrieve Precipitation Sensor Metadata - Sensor Information	F.3.2.1			
			5.8.22	precipitationSensorTableNumSensors	
			5.8.24.1	precipitationSensorIndex	
			5.8.24.6	precipitationSensorModelInformationV4	
3.5.2.1.14.3	Configure Precipitation Sensor Metadata - Location	F.3.2.3			
			5.8.24.1	precipitationSensorIndex	
			5.8.24.2	precipitationSensorHeight	
			5.8.24.3	precipitationSensorLatitude	
			5.8.24.4	precipitationSensorLongitude	
			5.8.24.5	precipitationSensorLocation	
3.5.2.1.14.4	Configure Precipitation Total User Specified Period	F.3.2.3			
			5.8.24.1	precipitationSensorIndex	
			5.8.24.7	precipitationSensorPeriod	
3.5.2.1.15	Manage Solar Radiation Sensor Metadata				
3.5.2.1.15.1	Retrieve Solar Radiation Sensor Metadata - Location	F.3.2.1			
			5.9.8	radiationSensorTableNumSensors	
			5.9.10.1	radiationSensorIndex	
			5.9.10.2	radiationSensorHeight	
			5.9.10.3	radiationSensorLatitude	
			5.9.10.4	radiationSensorLongitude	
			5.9.10.5	radiationSensorLocation	

Copy Per RTM Distribution Permission
© 2018 AASHTO / ITE / NEMA

Requirements Traceability Matrix (RTM)					
FR ID	**Functional Requirement**	**Dialog ID**	**Object ID**	**Object Name**	**Additional Specifications**
3.5.2.1.15.2	Retrieve Solar Radiation Sensor Metadata - Sensor Information	F.3.2.1			
			5.9.8	radiationSensorTableNumSensors	
			5.9.10.1	radiationSensorIndex	
			5.9.10.6	radiationSensorModelInformation	
3.5.2.1.15.3	Configure Solar Radiation Sensor Metadata - Location	F.3.2.3			
			5.9.10.1	radiationSensorIndex	
			5.9.10.2	radiationSensorHeight	
			5.9.10.3	radiationSensorLatitude	
			5.9.10.4	radiationSensorLongitude	
			5.9.10.5	radiationSensorLocation	
3.5.2.1.16	Manage Visibility Sensor Metadata				
3.5.2.1.16.1	Retrieve Visibility Sensor Metadata - Location	G.1			
			5.10.3	visibilitySensorHeight	
			5.10.4	visibilitySensorLatitude	
			5.10.5	visibilitySensorLongitude	
			5.10.6	visibilitySensorLocation	
3.5.2.1.16.2	Retrieve Visibility Sensor Metadata - Sensor Information	G.1			
			5.10.7	visibilitySensorModelInformation	
3.5.2.1.16.3	Configure Visibility Sensor Metadata - Location	G.3			
			5.10.3	visibilitySensorHeight	
			5.10.4	visibilitySensorLatitude	
			5.10.5	visibilitySensorLongitude	
			5.10.6	visibilitySensorLocation	
3.5.2.1.17	Manage Pavement Sensor Metadata				
3.5.2.1.17.1	Retrieve Pavement Sensor Metadata - Location	F.3.2.1			
			5.11.1	numEssPavementSensors	
			5.11.3.1	essPavementSensorIndex	
			5.11.3.2	essPavementSensorLocation	
			5.11.3.4	essPavementElevation	

© 2018 AASHTO / ITE / NEMA
Copy Per RTM Distribution Permission

Requirements Traceability Matrix (RTM)					
FR ID	**Functional Requirement**	**Dialog ID**	**Object ID**	**Object Name**	**Additional Specifications**
			5.11.3.20	pavementSensorLatitude	
			5.11.3.21	pavementSensorLongitude	
			5.11.3.25	pavementMonitorLatitude	
			5.11.3.26	pavementMonitorLongitude	
3.5.2.1.17.2	Retrieve Pavement Sensor Metadata - Sensor Information	F.3.2.1			
			5.11.1	numEssPavementSensors	
			5.11.3.1	essPavementSensorIndex	
			5.11.3.18	pavementSensorModelInformation	
3.5.2.1.17.3	Configure Pavement Sensor - Location	F.3.2.3			
			5.11.3.1	essPavementSensorIndex	
			5.11.3.2	essPavementSensorLocation	
			5.11.3.4	essPavementElevation	
			5.11.3.20	pavementSensorLatitude	
			5.11.3.21	pavementSensorLongitude	
			5.11.3.25	pavementMonitorLatitude	
			5.11.3.26	pavementMonitorLongitude	
3.5.2.1.18	Manage Subsurface Sensor Metadata				
3.5.2.1.18.1	Retrieve Subsurface Sensor Metadata - Location	F.3.2.1			
			5.11.4	numEssSubSurfaceSensors	
			5.11.6.1	essSubSurfaceSensorIndex	
			5.11.6.2	essSubSurfaceSensorLocation	
			5.11.6.4	essSubSurfaceSensorDepth	
			5.11.6.8	essSubSurfaceSensorLatitude	
			5.11.6.9	essSubSurfaceSensorLongitude	
3.5.2.1.18.2	Retrieve Subsurface Sensor Metadata - Sensor Information	F.3.2.1			
			5.11.4	numEssSubSurfaceSensors	
			5.11.6.1	essSubSurfaceSensorIndex	
			5.11.6.10	essSubSurfaceSensorModelInformation	

Copy Per RTM Distribution Permission
© 2018 AASHTO / ITE / NEMA

Requirements Traceability Matrix (RTM)					
FR ID	**Functional Requirement**	**Dialog ID**	**Object ID**	**Object Name**	**Additional Specifications**
3.5.2.1.18.3	Configure Subsurface Sensor - Location	F.3.2.3			
			5.11.6.1	essSubSurfaceSensorIndex	
			5.11.6.2	essSubSurfaceSensorLocation	
			5.11.6.4	essSubSurfaceSensorDepth	
			5.11.6.8	essSubSurfaceSensorLatitude	
			5.11.6.9	essSubSurfaceSensorLongitude	
3.5.2.1.19	Manage Air Quality Sensor Metadata				
3.5.2.1.19.1	Retrieve Air Quality Sensor Metadata - Location	F.3.2.1			
			5.14.10	airQualitySensorTableNumSensors	
			5.14.11	airQualitySensorTable	
			5.14.12.1	airQualitySensorIndex	
			5.14.12.2	airQualitySensorHeight	
			5.14.12.3	airQualitySensorLatitude	
			5.14.12.4	airQualitySensorLongitude	
			5.14.12.5	airQualitySensorLocation	
3.5.2.1.19.2	Retrieve Air Quality Sensor Metadata - Sensor Information	F.3.2.1			
			5.14.10	airQualitySensorTableNumSensors	
			5.14.11	airQualitySensorTable	
			5.14.12.1	airQualitySensorIndex	
			5.14.12.6	airQualitySensorModelInformation	
3.5.2.1.19.3	Configure Air Quality Sensor Metadata - Location	F.3.2.3			
			5.14.11	airQualitySensorTable	
			5.14.12.1	airQualitySensorIndex	
			5.14.12.2	airQualitySensorHeight	
			5.14.12.3	airQualitySensorLatitude	
			5.14.12.4	airQualitySensorLongitude	
			5.14.12.5	airQualitySensorLocation	
3.5.2.1.20	Manage Water Level Sensor Metadata				

© 2018 AASHTO / ITE / NEMA
Copy Per RTM Distribution Permission

Requirements Traceability Matrix (RTM)					
FR ID	**Functional Requirement**	**Dialog ID**	**Object ID**	**Object Name**	**Additional Specifications**
3.5.2.1.20.1	Retrieve Water Level Metadata - Location	F.3.2.1			
			5.8.19	waterLevelSensorTableNumSensors	
			5.8.21.1	waterLevelSensorIndex	
			5.8.21.4	waterLevelSensorHeight	
			5.8.21.5	waterLevelSensorLatitude	
			5.8.21.6	waterLevelSensorLongitude	
			5.8.21.7	waterLevelSensorLocation	
			5.8.21.9	waterLevelSensorReferencePoint	
3.5.2.1.20.2	Retrieve Water Level Metadata - Sensor Information	F.3.2.1			
			5.8.19	waterLevelSensorTableNumSensors	
			5.8.21.1	waterLevelSensorIndex	
			5.8.21.8	waterLevelSensorModelInformation	
3.5.2.1.20.3	Retrieve Water Level Metadata - Warning Level	F.3.2.1			
			5.8.19	waterLevelSensorTableNumSensors	
			5.8.21.1	waterLevelSensorIndex	
			5.8.21.3	waterLevelSensorWarningLevel	
3.5.2.1.20.4	Configure Water Level Metadata - Location	F.3.2.3			
			5.8.21.1	waterLevelSensorIndex	
			5.8.21.4	waterLevelSensorHeight	
			5.8.21.5	waterLevelSensorLatitude	
			5.8.21.6	waterLevelSensorLongitude	
			5.8.21.7	waterLevelSensorLocation	
			5.8.21.9	waterLevelSensorReferencePoint	
3.5.2.1.20.5	Configure Water Level Metadata - Warning Level	F.3.2.3			
			5.8.21.1	waterLevelSensorIndex	
			5.8.21.3	waterLevelSensorWarningLevel	
3.5.2.1.21	Manage Pavement Treatment System Metadata				

Copy Per RTM Distribution Permission
© 2018 AASHTO / ITE / NEMA

Requirements Traceability Matrix (RTM)					
FR ID	**Functional Requirement**	**Dialog ID**	**Object ID**	**Object Name**	**Additional Specifications**
3.5.2.1.21.1	Retrieve Pavement Treatment System Metadata - Location	G.1			
			5.13.21	essPavementTreatmentLatitude	
			5.13.22	essPavementTreatmentLongitude	
			5.13.23	essPavementTreatmentLocation	
3.5.2.1.21.2	Retrieve Pavement Treatment Metadata - System Information	G.1			
			5.13.24	essPavementTreatmentModelInformation	
3.5.2.1.21.3	Configure Pavement Treatment System Metadata - Location	G.3			
			5.13.21	essPavementTreatmentLatitude	
			5.13.22	essPavementTreatmentLongitude	
			5.13.23	essPavementTreatmentLocation	
3.5.2.2	Sensor Status Monitoring Requirements				
3.5.2.3	Sensor Data Retrieval Requirements				
3.5.2.3.1	Retrieve Weather Profile with Mobile Sources [Version 03 Only - Deprecated in v04]				See 3.5.4.20.
3.5.2.3.2	Monitor Weather Condition				
3.5.2.3.2.1	Retrieve Atmospheric Pressure [Versions 01 to 03 Only - Deprecated in v04]				See 3.5.4.21.
3.5.2.3.2.2	Retrieve Wind Data	F.3.2.1			
			5.6.8	windSensorTableNumSensors	
			5.6.9	windSensorTable	
			5.6.10.1	windSensorIndex	
			5.6.10.4	windSensorAvgSpeed	
			5.6.10.5	windSensorAvgDirection	
			5.6.10.6	windSensorSpotSpeed	
			5.6.10.7	windSensorSpotDirection	
			5.6.10.8	windSensorGustSpeed	
			5.6.10.9	windSensorGustDirection	

© 2018 AASHTO / ITE / NEMA
Copy Per RTM Distribution Permission

Requirements Traceability Matrix (RTM)					
FR ID	**Functional Requirement**	**Dialog ID**	**Object ID**	**Object Name**	**Additional Specifications**
			5.6.10.10	windSensorSituation	
3.5.2.3.2.3	Retrieve Air Temperature	F.3.2.1			
			5.7.1	essNumTemperatureSensors	
			5.7.2	essTemperatureSensorTable	
			5.7.3.1	essTemperatureSensorIndex	
			5.7.3.3	essAirTemperature	
3.5.2.3.2.4	Retrieve Daily Minimum and Maximum Temperature	G.1			
			5.7.6	essMaxTemp	
			5.7.7	essMinTemp	
3.5.2.3.2.5	Retrieve Humidity [Versions 01 to 03 Only - Deprecated in v04]				See 3.5.4.22.
3.5.2.3.2.6	Monitor Precipitation				
3.5.2.3.2.6.1	Retrieve Precipitation Presence [Versions 01 to 03 Only - Deprecated in v04]				See 3.5.4.23.
3.5.2.3.2.6.2	Retrieve Precipitation Rates [Versions 01 to 03 Only - Deprecated in v04]				See 3.5.4.24.
3.5.2.3.2.6.3	Retrieve Precipitation Totals [Versions 01 to 03 Only - Deprecated in v04]				See 3.5.4.25.
3.5.2.3.2.6.4	Retrieve Precipitation Presence	4.2.16			
			5.8.22	precipitationSensorTableNumSensors	
			5.8.23	precipitationSensorTable	
			5.8.24.1	precipitationSensorIndex	
			5.8.24.11	precipitationSensorPrecipYesNo	
3.5.2.3.2.6.5	Retrieve Precipitation Rates	F.3.2.1			
			5.8.22	precipitationSensorTableNumSensors	
			5.8.23	precipitationSensorTable	

Copy Per RTM Distribution Permission
© 2018 AASHTO / ITE / NEMA

Requirements Traceability Matrix (RTM)					
FR ID	**Functional Requirement**	**Dialog ID**	**Object ID**	**Object Name**	**Additional Specifications**
			5.8.24.1	precipitationSensorIndex	
			5.8.24.12	precipitationSensorPrecipRate	
			5.8.24.13	precipitationSensorSnowfallAccumRate	
			5.8.24.16	precipitationSensorPrecipitationStartTime	
			5.8.24.17	precipitationSensorPrecipitationEndTime	
3.5.2.3.2.6.6	Retrieve Precipitation Totals	F.3.2.1			
			5.8.22	precipitationSensorTableNumSensors	
			5.8.23	precipitationSensorTable	
			5.8.24.1	precipitationSensorIndex	
			5.8.24.18	precipitationSensorPrecipitationOneHour	
			5.8.24.19	precipitationSensorPrecipitationThreeHours	
			5.8.24.20	precipitationSensorPrecipitationSixHours	
			5.8.24.21	precipitationSensorPrecipitationTwelveHours	
			5.8.24.22	precipitationSensorPrecipitation24Hours	
3.5.2.3.2.6.7	Retrieve Precipitation Totals - User Specified	F.3.2.2			
			5.8.22	precipitationSensorTableNumSensors	
			5.8.24.1	precipitationSensorIndex	
			5.8.24.7	precipitationSensorPeriod	
			5.8.24.23	precipitationSensorPrecipitationUserDefined	
3.5.2.3.2.6.8	Retrieve Precipitation Type	G.1			
			5.8.24.14	precipitationSensorPrecipSituation	
3.5.2.3.2.7	Retrieve Solar Radiation [Versions 01 to 03 Only - Deprecated in v04]				See 3.5.4.26.

© 2018 AASHTO / ITE / NEMA
Copy Per RTM Distribution Permission

Requirements Traceability Matrix (RTM)					
FR ID	**Functional Requirement**	**Dialog ID**	**Object ID**	**Object Name**	**Additional Specifications**
3.5.2.3.2.8	Retrieve Visibility	G.1			
			5.10.1	essVisibility	
3.5.2.3.2.9	Retrieve Compressed Weather Data [Version 03 - Deprecated in v04]				See 3.5.4.27.
3.5.2.3.2.10	Retrieve Atmospheric Pressure	F.3.2.1			
			5.5.5	essNumPressureSensors	
			5.5.6	essPressureSensorTable	
			5.5.7.1	essPressureSensorIndex	
			5.5.7.7	essPressureSensorAtmosphericPressure	
3.5.2.3.2.11	Retrieve Relative Humidity	F.3.2.1			
			5.8.25	humiditySensorTableNumSensors	
			5.8.26	humiditySensorTable	
			5.8.27.1	humiditySensorIndex	
			5.8.27.7	humiditySensorRelativeHumidity	
			5.8.27.8	humiditySensorTemperatureInformation	
			5.8.27.9	humiditySensorWetbulbTemp	
			5.8.27.10	humiditySensorDewpointTemp	
3.5.2.3.2.12	Retrieve Solar Radiation	4.2.17			
			5.9.7	essTotalRadiationPeriod	
			5.9.8	radiationSensorTableNumSensors	
			5.9.9	radiationSensorTable	
			5.9.10.1	radiationSensorIndex	
			5.9.10.7	essTotalSunV4	
			5.9.10.8	essInstantaneousTerrestrialRadiationV4	
			5.9.10.9	essInstantaneousSolarRadiationV4	
			5.9.10.10	essTotalRadiationV4	
3.5.2.3.3	Monitor Pavement Condition				
3.5.2.3.3.1	Retrieve Pavement Surface Condition [Versions 01 to 03 - Deprecated in v04]				See 3.5.4.28.

Copy Per RTM Distribution Permission
© 2018 AASHTO / ITE / NEMA

Requirements Traceability Matrix (RTM)					
FR ID	**Functional Requirement**	**Dialog ID**	**Object ID**	**Object Name**	**Additional Specifications**
3.5.2.3.3.2	Retrieve Conditions for Freezing Algorithms - Active	4.2.15			
			5.11.2	essPavementSensorTable	
			5.11.3.1	essPavementSensorIndex	
			5.11.3.8	essSurfaceTemperature	
			5.11.3.9	essPavementTemperature	
			5.11.3.13	essSurfaceFreezePoint	
			5.11.3.14	essSurfaceBlackIceSignal	
			5.11.3.15	essPavementSensorError	
			5.11.3.16	essSurfaceIceOrWaterDepth	
			5.11.3.19	pavementSensorTemperatureDepth	
3.5.2.3.3.3	Retrieve Conditions for Freezing Algorithms - Passive	4.2.6			
			5.11.2	essPavementSensorTable	
			5.11.3.1	essPavementSensorIndex	
			5.11.3.8	essSurfaceTemperature	
			5.11.3.9	essPavementTemperature	
			5.11.3.11	essSurfaceSalinity	
			5.11.3.13	essSurfaceFreezePoint	
			5.11.3.14	essSurfaceBlackIceSignal	
			5.11.3.15	essPavementSensorError	
			5.11.3.16	essSurfaceIceOrWaterDepth	
			5.11.3.17	essSurfaceConductivityV2	
			5.11.3.19	pavementSensorTemperatureDepth	
			5.13.1	numEssTreatments	
			5.13.3.1	essPavementTreatmentIndex	
			5.13.3.2	essPaveTreatProductType	
			5.13.3.3	essPaveTreatProductForm	
			5.13.3.4	essPercentProductMix	
3.5.2.3.3.4	Retrieve Adjacent Snow Depth [Versions 01 to 03 - Deprecated in v04]				See 3.5.4.30.

© 2018 AASHTO / ITE / NEMA
Copy Per RTM Distribution Permission

Requirements Traceability Matrix (RTM)					
FR ID	**Functional Requirement**	**Dialog ID**	**Object ID**	**Object Name**	**Additional Specifications**
3.5.2.3.3.5	Retrieve Roadway Snow Depth [Versions 01 to 03 - Deprecated in v04]				See 3.5.4.31.
3.5.2.3.3.6	Retrieve Roadway Ice Thickness [Versions 01 to 03 - Deprecated in v04]				See 3.5.4.32.
3.5.2.3.3.7	Retrieve Compressed Pavement Condition Data [Version 03 - Deprecated in v04]				See 3.5.4.29.
3.5.2.3.3.8	Retrieve Pavement Surface Condition	F.3.2.1			
			5.11.1	numEssPavementSensors	
			5.11.2	essPavementSensorTable	
			5.11.3.1	essPavementSensorIndex	
			5.11.3.8	essSurfaceTemperature	
			5.11.3.15	essPavementSensorError	
			5.11.3.22	pavementSensorSurfaceCondition	
3.5.2.3.3.9	Retrieve Forecasted Pavement Surface Condition	F.3.2.1			
			5.11.1	numEssPavementSensors	
			5.11.2	essPavementSensorTable	
			5.11.3.1	essPavementSensorIndex	
			5.11.3.23	pavementSensorForecastCondition	
3.5.2.3.3.10	Retrieve Roadway Friction Coefficient	F.3.2.2			
			5.11.2	essPavementSensorTable	
			5.11.3.1	essPavementSensorIndex	
			5.11.3.24	pavementSensorFrictionCoefficient	.
3.5.2.3.3.11	Retrieve Adjacent Snow Depth	G.1			
			5.8.24.8	precipitationSensorAdjacentSnowDepth	
3.5.2.3.3.12	Retrieve Roadway Snow Depth	G.1			

Copy Per RTM Distribution Permission
© 2018 AASHTO / ITE / NEMA

Requirements Traceability Matrix (RTM)					
FR ID	**Functional Requirement**	**Dialog ID**	**Object ID**	**Object Name**	**Additional Specifications**
			5.8.24.9	precipitationSensorRoadwaySnowDepth	
			5.8.24.10	precipitationSensorRoadwaySnowPackDepth	
3.5.2.3.3.13	Retrieve Roadway Ice Thickness	G.1			
			5.8.24.15	precipitationSensorIceThickness	
3.5.2.3.4	Monitor Subsurface Conditions				
3.5.2.3.4.1	Retrieve Subsurface Temperature	F.3.2.2			
			5.11.5	essSubSurfaceSensorTable	
			5.11.6.1	essSubSurfaceSensorIndex	
			5.11.6.5	essSubSurfaceTemperature	
			5.11.6.7	essSubSurfaceSensorError	
3.5.2.3.4.2	Retrieve Subsurface Moisture	F.3.2.2			
			5.11.5	essSubSurfaceSensorTable	
			5.11.6.1	essSubSurfaceSensorIndex	
			5.11.6.6	essSubSurfaceMoisture	
3.5.2.3.4.3	Retrieve Compressed Subsurface Condition Data [Version 03 - Deprecated in v04]				See 3.5.4.33.
3.5.2.3.5	Monitor Situation Assessments				
3.5.2.3.5.1	Retrieve Wind Situation	F.3.2.1			
			5.6.8	windSensorTableNumSensors	
			5.6.10.1	windSensorIndex	
			5.6.10.10	windSensorSituation	
3.5.2.3.5.2	Retrieve Precipitation Situation	G.1			
			5.8.9	essPrecipSituation	
3.5.2.3.5.3	Retrieve Cloud Situation [Versions 01 to 03 Only - Deprecated in v04]				See 3.5.4.34.
3.5.2.3.5.4	Retrieve Visibility Situation	G.1			
			5.10.2	essVisibilitySituation	
3.5.2.3.5.5	Retrieve Ground State [Versions 01 to 03 Only - Deprecated in v04]	G.1			See 3.5.4.35.

© 2018 AASHTO / ITE / NEMA
Copy Per RTM Distribution Permission

Requirements Traceability Matrix (RTM)					
FR ID	**Functional Requirement**	**Dialog ID**	**Object ID**	**Object Name**	**Additional Specifications**
3.5.2.3.5.6	Retrieve Pavement State [Versions 01 to 03 Only - Deprecated in v04]	G.1			See 3.5.4.36.
3.5.2.3.5.7	Retrieve Cloud Situation	G.1			
			5.9.11	essCloudSituationV4	
3.5.2.3.5.8	Retrieve Ground State	G.1			
			5.12.4	essMobileObservationGroundStateV4	
3.5.2.3.5.9	Retrieve Pavement State	G.1			
			5.12.5	essMobileObservationPavementV4	
3.5.2.3.6	Monitor Air Quality and Biohazard Conditions				
3.5.2.3.6.1	Retrieve Carbon Monoxide Reading	G.1			
			5.14.1	essCO	
3.5.2.3.6.2	Retrieve Carbon Dioxide Reading [Versions 01 to 03 - Deprecated in v04]				See 3.5.4.37.
3.5.2.3.6.3	Retrieve Nitrous Oxide Reading [Versions 01 to 03 - Deprecated in v04]				See 3.5.4.37.
3.5.2.3.6.4	Retrieve Nitrogen Dioxide Reading	G.1			
			5.14.4	essNO2	
3.5.2.3.6.5	Retrieve Sulfur Dioxide Reading	G.1			
			5.14.5	essSO2	
3.5.2.3.6.6	Retrieve Ozone Reading [Versions 01 to 03 - Deprecated in v04]				See 3.5.4.37.
3.5.2.3.6.7	Retrieve Small Particulate Matter Reading	G.1			
			5.14.7	essPM10	
3.5.2.3.6.8	Retrieve Compressed Air Quality Data [Version 03 - Deprecated in v04]				See 3.5.4.37.

Copy Per RTM Distribution Permission
© 2018 AASHTO / ITE / NEMA

Requirements Traceability Matrix (RTM)					
FR ID	**Functional Requirement**	**Dialog ID**	**Object ID**	**Object Name**	**Additional Specifications**
3.5.2.3.6.9	Retrieve Particulate Matter (2.5) Reading	G.1			
			5.14.9	essPM25	
3.5.2.3.6.10	Retrieve Carbon Dioxide Reading	G.1			
			5.14.13	essCO2V4	
3.5.2.3.6.11	Retrieve Nitric Oxide Reading	G.1			
			5.14.14	essNOV4	
3.5.2.3.6.12	Retrieve Ozone Reading	G.1			
			5.14.15	essO3V4	
3.5.2.3.7	Retrieve Water Level	F.3.2.1			
			5.8.19	waterLevelSensorTableNumSensors	
			5.8.20	waterLevelSensorTable	
			5.8.21.1	waterLevelSensorIndex	
			5.8.21.2	waterLevelSensorReading	
3.5.2.3.8	Retrieve Snapshot	4.2.2			Upon ESS delivery the FTP username shall be _____. Upon ESS delivery, the FTP password shall be _____. Note: For agencies that restrict the use of FTP, see Annex E.3 for additional information.
					<not an SNMP Object> Snapshot.filename:text. See Annex F.5.1.
					<not an SNMP object> Snapshot.image:frame. See Annex F.5.2.
3.5.2.3.9	Retrieve Snapshot Camera Configuration	4.2.11			
			5.16.1	essSnapshotNumberOfCameras	
			5.16.2	essSnapshotCameraTable	
			5.16.3.1	essSnapshotCameraIndex	

© 2018 AASHTO / ITE / NEMA
Copy Per RTM Distribution Permission

Requirements Traceability Matrix (RTM)					
FR ID	**Functional Requirement**	**Dialog ID**	**Object ID**	**Object Name**	**Additional Specifications**
			5.16.3.2	essSnapshotCameraDescription	
			5.16.3.3	essSnapshotCameraStoragePath	
			5.16.3.6	essSnapshotCameraFilename	
3.5.2.3.10	Retrieve Sensor Profile with Mobile Sources	4.2.20			
			5.4.1	essLatitude	
			5.4.2	essLongitude	
			5.4.3	essVehicleSpeed	
			5.4.4	essVehicleBearing	
			5.4.5	essOdometer	
			5.5.1	essReferenceHeight	
			5.6.8	windSensorTableNumSensors	
			5.6.10.1	windSensorIndex	
			5.6.10.4	windSensorAvgSpeed	
			5.6.10.5	windSensorAvgDirection	
			5.6.10.6	windSensorSpotSpeed	
			5.6.10.7	windSensorSpotDirection	
			5.6.10.8	windSensorGustSpeed	
			5.6.10.9	windSensorGustDirection	
			5.6.10.10	windSensorSituation	
			5.7.1	essNumTemperatureSensors	
			5.7.3.1	essTemperatureSensorIndex	
			5.7.3.3	essAirTemperature	
			5.8.9	essPrecipSituation	
			5.8.22	precipitationSensorTableNumSensors	
			5.8.24.1	precipitationSensorIndex	
			5.8.24.8	precipitationSensorAdjacentSnowDepth	
			5.8.24.9	precipitationSensorRoadwaySnowDepth	
			5.8.24.10	precipitationSensorRoadwaySnowPackDepth	
			5.8.24.11	precipitationSensorPrecipYesNo	
			5.8.24.12	precipitationSensorPrecipRate	

Copy Per RTM Distribution Permission
© 2018 AASHTO / ITE / NEMA

Requirements Traceability Matrix (RTM)					
FR ID	**Functional Requirement**	**Dialog ID**	**Object ID**	**Object Name**	**Additional Specifications**
			5.8.24.13	precipitationSensorSnowfallAccumRate	
			5.8.24.14	precipitationSensorPrecipSituation	
			5.8.24.15	precipitationSensorIceThickness	
			5.8.24.16	precipitationSensorPrecipitationStartTime	
			5.8.24.17	precipitationSensorPrecipitationEndTime	
			5.8.24.18	precipitationSensorPrecipitationOneHour	
			5.8.24.19	precipitationSensorPrecipitationThreeHours	
			5.8.24.20	precipitationSensorPrecipitationSixHours	
			5.8.24.21	precipitationSensorPrecipitationTwelveHours	
			5.8.24.22	precipitationSensorPrecipitation24Hours	
			5.10.1	essVisibility	
			5.10.2	essVisibilitySituation	
			5.12.4	essMobileObservationGroundStateV4	
			5.12.5	essMobileObservationPavementV4	
			5.5.5	essNumPressureSensors	
			5.5.7.1	essPressureSensorIndex	
			5.5.7.7	essPressureSensorAtmosphericPressure	
			5.8.25	humiditySensorTableNumSensors	
			5.8.27.1	humiditySensorIndex	
			5.8.27.7	humiditySensorRelativeHumidity	
			5.8.27.9	humiditySensorWetbulbTemp	
			5.8.27.10	humiditySensorDewpointTemp	
			5.9.11	essCloudSituationV4	
			5.11.3.1	essPavementSensorIndex	
			5.11.3.8	essSurfaceTemperature	
			5.11.3.9	essPavementTemperature	

© 2018 AASHTO / ITE / NEMA
Copy Per RTM Distribution Permission

Requirements Traceability Matrix (RTM)					
FR ID	**Functional Requirement**	**Dialog ID**	**Object ID**	**Object Name**	**Additional Specifications**
			5.11.3.11	essSurfaceSalinity	
			5.11.3.13	essSurfaceFreezePoint	
			5.11.3.15	essPavementSensorError	
			5.11.3.16	essSurfaceIceOrWaterDepth	
			5.11.3.22	pavementSensorSurfaceCondition	
			5.11.3.23	pavementSensorForecastCondition	
			5.11.3.24	pavementSensorFrictionCoefficient	
			5.11.3.27	pavementIcePercentage	
			1201v03 - 2.4.1	globalTime	
			1201v03 - 2.4.2	globalDaylightSaving	
3.5.2.4	Sensor Control Requirements				
3.5.2.4.1	Capture Snapshot Image	4.2.1			
			5.16.3.1	essSnapshotCameraIndex	
			5.16.3.3	essSnapshotCameraStoragePath	
			5.16.3.4	essSnapshotCameraCommand	
			5.16.3.5	essSnapshotCameraError	
			5.16.3.6	essSnapshotCameraFilename	
3.5.2.4.2	Delete Snapshot	4.2.3			
					<not an SNMP Object> Snapshot.filename:text See Annex F.5.1
					<not an SNMP object> Snapshot.image:frame. See Annex F.5.2.
3.5.2.4.3	Copy Snapshot - [Obsolete]	4.2.4			
					<not an SNMP Object> Snapshot.filename:text See Annex F.5.1
					<not an SNMP object> Snapshot.image:frame. See Annex F.5.2.
3.5.3	PTS Manager Requirements				
3.5.3.1	PTS Configuration Requirements				
3.5.3.1.1	Retrieve Stationary Pavement Treatment Configuration	4.2.5			
			5.13.1	numEssTreatments	

© 2018 AASHTO / ITE / NEMA

Requirements Traceability Matrix (RTM)					
FR ID	**Functional Requirement**	**Dialog ID**	**Object ID**	**Object Name**	**Additional Specifications**
			5.13.2	essPavementTreatmentTable	
			5.13.3.1	essPavementTreatmentIndex	
			5.13.3.2	essPaveTreatProductType	
			5.13.3.3	essPaveTreatProductForm	
			5.13.3.4	essPercentProductMix	
			5.13.10	ptsSignalDuration	
			5.13.18	ptsMonitoringDetectors	
3.5.3.1.2	Configure Stationary Pavement Treatment System	4.2.7			
			5.13.1	numEssTreatments	
			5.13.2	essPavementTreatmentTable	
			5.13.3.1	essPavementTreatmentIndex	
			5.13.3.2	essPaveTreatProductType	
			5.13.3.3	essPaveTreatProductForm	
			5.13.3.4	essPercentProductMix	
			5.13.10	ptsSignalDuration	
			5.13.18	ptsMonitoringDetectors	
3.5.3.1.3	Retrieve Mobile Pavement Treatment Configuration [Versions 01 to 03 Only - Deprecated in v04]				See 3.5.4.38.
3.5.3.1.4	Configure Mobile Pavement Treatment System	4.2.9			
			5.13.1	numEssTreatments	
			5.13.2	essPavementTreatmentTable	
			5.13.3.1	essPavementTreatmentIndex	
			5.13.3.2	essPaveTreatProductType	
			5.13.3.3	essPaveTreatProductForm	
			5.13.3.4	essPercentProductMix	
			5.13.4	essPaveTreatmentAmount	
			5.13.5	essPaveTreatmentWidth	
			5.13.10	ptsSignalDuration	
3.5.3.1.5	Retrieve Mobile Pavement Treatment Configuration	4.2.18			
			5.13.1	numEssTreatments	

© 2018 AASHTO / ITE / NEMA
Copy Per RTM Distribution Permission

Requirements Traceability Matrix (RTM)					
FR ID	**Functional Requirement**	**Dialog ID**	**Object ID**	**Object Name**	**Additional Specifications**
			5.13.2	essPavementTreatmentTable	
			5.13.3.1	essPavementTreatmentIndex	
			5.13.3.2	essPaveTreatProductType	
			5.13.3.3	essPaveTreatProductForm	
			5.13.3.4	essPercentProductMix	
			5.13.4	essPaveTreatmentAmount	
			5.13.5	essPaveTreatmentWidth	
3.5.3.2	PTS Status Monitoring Requirements				
3.5.3.2.1	Retrieve Pavement Treatment Status	G.1			
			5.13.9	ptsSprayerState	
			5.13.11	ptsSignalEventCount	
			5.13.12	ptsLastSignalEvent	
			5.13.13	ptsActiveEventCount	
			5.13.14	ptsInactiveEventCount	
			5.13.15	ptsLastActiveEvent	
			5.13.16	ptsLastInactiveEvent	
			5.13.17	ptsError	
3.5.3.3	PTS Data Retrieval Requirements				
3.5.3.3.1	Retrieve Pavement Treatment Profile with Mobile Sources	4.2.19			
			5.4.1	essLatitude	
			5.4.2	essLongitude	
			5.4.3	essVehicleSpeed	
			5.4.4	essVehicleBearing	
			5.4.5	essOdometer	
			5.5.1	essReferenceHeight	
			5.13.1	numEssTreatments	
			5.13.3.1	essPavementTreatmentIndex	
			5.13.3.2	essPaveTreatProductType	
			5.13.3.3	essPaveTreatProductForm	
			5.13.3.4	essPercentProductMix	
			5.13.4	essPaveTreatmentAmount	
			5.13.5	essPaveTreatmentWidth	

Copy Per RTM Distribution Permission
© 2018 AASHTO / ITE / NEMA

Requirements Traceability Matrix (RTM)					
FR ID	**Functional Requirement**	**Dialog ID**	**Object ID**	**Object Name**	**Additional Specifications**
			1201v03 - 2.4.1	globalTime	
			1201v03 - 2.4.2	globalDaylightSaving	
			1201v03 - 2.4.8.1	maxDaylightSavingEntries	
			1201v03 - 2.4.8.2.1	dstEntryNumber	
			1201v03 - 2.4.8.2.2	dstBeginMonth	
			1201v03 - 2.4.8.2.3	dstBeginOccurrences	
			1201v03 - 2.4.8.2.4	dstBeginDayOfWeek	
			1201v03 - 2.4.8.2.5	dstBeginDayOfMonth	
			1201v03 - 2.4.8.2.6	dstBeginSecondsToTransition	
			1201v03 - 2.4.8.2.7	dstEndMonth	
			1201v03 - 2.4.8.2.8	dstEndOccurrences	
			1201v03 - 2.4.8.2.9	dstEndDayOfWeek	
			1201v03 - 2.4.8.2.10	dstEndDayOfMonth	
			1201v03 - 2.4.8.2.11	dstEndSecondsToTransition	
			1201v03 - 2.4.8.2.12	dstSecondsToAdjust	
3.5.3.4	PTS Control Requirements				
3.5.3.4.1	Set PTS Operational Mode	G.3			
			5.13.19	ptsOperationalModeV3	
3.5.3.4.2	Manually Activate PTS Sprayer	G.3			
			5.13.20	ptsCommandStateV3	
3.5.4	Backward Compatibility Requirements				

© 2018 AASHTO / ITE / NEMA
Copy Per RTM Distribution Permission

Requirements Traceability Matrix (RTM)					
FR ID	**Functional Requirement**	**Dialog ID**	**Object ID**	**Object Name**	**Additional Specifications**
3.5.4.1	NTCIP 1204 v01 Wind Sensor Meta Data	RFC1157			
			5.5.3	essWindSensorHeight	
3.5.4.2	NTCIP 1204 v01 Average Wind Sensor Data	RFC1157			
			5.6.1	essAvgWindDirection	
			5.6.2	essAvgWindSpeed	
3.5.4.3	NTCIP 1204 v01 Spot Wind Sensor Data	RFC1157			
			5.6.3	essSpotWindDirection	
			5.6.4	essSpotWindSpeed	
3.5.4.4	NTCIP 1204 v01 Wind Gust Data	RFC1157			
			5.6.7	essMaxWindGustDir	
			5.6.6	essMaxWindGustSpeed	
3.5.4.5	NTCIP 1204 v01 Wind Situation	RFC1157			
			5.6.5	essWindSituation	
3.5.4.6	NTCIP 1204 v01 Water Depth	RFC1157			
			5.8.2	essWaterDepth	
3.5.4.7	NTCIP 1204 v01 Solar Radiation	RFC1157			
			5.9.1	essSolarRadiation	
3.5.4.8	NTCIP 1204 v01 Surface Water Depth	RFC1157			
			5.11.3.10	essSurfaceWaterDepth	
3.5.4.9	NTCIP 1204 v01 Surface Conductivity	RFC1157			
			5.11.3.12	essSurfaceConductivity	
3.5.4.10	NTCIP 1204 v02 Station Meta Data Block	G.1			
			5.3.5	essStationMetaDataBlock	
3.5.4.11	NTCIP 1204 v02 Weather Block	G.1			
			5.3.6	essWeatherBlock	
3.5.4.12	NTCIP 1204 v02 Pavement Block	G.1			
			5.11.7	essPavementBlock	
3.5.4.13	NTCIP 1204 v03 Retrieve External Port Information	F.3.2.1			

Copy Per RTM Distribution Permission
© 2018 AASHTO / ITE / NEMA

Requirements Traceability Matrix (RTM)					
FR ID	**Functional Requirement**	**Dialog ID**	**Object ID**	**Object Name**	**Additional Specifications**
			1201v02 - 2.8.2	auxIOTableNumAnalogPorts	
			1201v02 - 2.8.3.1	auxIOPortType	
			1201v02 - 2.8.3.2	auxIOPortNumber	
			1201v02 - 2.8.3.3	auxIOPortDescription	
			1201v02 - 2.8.3.4	auxIOPortResolution	
			1201v02 - 2.8.3.6	auxIOPortDirection	
3.5.4.14	NTCIP 1204 v03 Configure Port Information	F.3.2.3			
			1201v02 - 2.8.3.1	auxIOPortType	
			1201v02 - 2.8.3.2	auxIOPortNumber	
			1201v02 - 2.8.3.3	auxIOPortDescription	
3.5.4.15	NTCIP 1204 v03 Monitor Status of External Device	F.3.2.1			
			1201v02 - 2.8.3.5	auxIOPortValue	
			1201v02 - 2.8.3.7	auxIOPortLastCommandedState	
3.5.4.16	NTCIP 1204 v03 Control External Device	F.3.2.3			
			1201v02 - 2.8.3.1	auxIOPortType	
			1201v02 - 2.8.3.2	auxIOPortNumber	
			1201v02 - 2.8.3.5	auxIOPortValue	
3.5.4.17	NTCIP 1204 v03 Station Metadata Block	G.1			
			5.3.8	essStationMetaDataV3Block	

© 2018 AASHTO / ITE / NEMA
Copy Per RTM Distribution Permission

Requirements Traceability Matrix (RTM)					
FR ID	**Functional Requirement**	**Dialog ID**	**Object ID**	**Object Name**	**Additional Specifications**
3.5.4.18	NTCIP 1204 v03 Mobile ESS Data Block	G.1			
			5.3.7	essMobileBlock	
3.5.4.19	NTCIP 1204 v01-v03 Atmospheric Pressure Height	G.1			
			5.5.2	essPressureHeight	
3.5.4.20	NTCIP 1204 v03 Weather Profile with Mobile Sources	G.1			
			5.3.9	essWeatherV3Block	
			5.4.1	essLatitude	
			5.4.2	essLongitude	
			5.4.3	essVehicleSpeed	
			5.4.4	essVehicleBearing	
			5.4.5	essOdometer	
			5.5.1	essReferenceHeight	
			5.12.1	essMobileFriction	
			5.12.2	essMobileObservationGroundState	
			5.12.3	essMobileObservationPavement	
3.5.4.21	NTCIP 1204 v01-v03 Atmospheric Pressure	G.1			
			5.5.4	essAtmosphericPressure	
3.5.4.22	NTCIP 1204 v01-v03 Humidity	G.1			
			5.7.4	essWetbulbTemp	
			5.7.5	essDewpointTemp	
			5.8.1	essRelativeHumidity	
3.5.4.23	NTCIP 1204 v01-v03 Precipitation Presence	4.2.12			
			5.8.6	essPrecipYesNo	
			5.8.18	precipitationSensorModelInformation	
3.5.4.24	NTCIP 1204 v01-v03 Precipitation Rates	G.1			
			5.8.7	essPrecipRate	
			5.8.8	essSnowfallAccumRate	
			5.8.11	essPrecipitationStartTime	

Copy Per RTM Distribution Permission
© 2018 AASHTO / ITE / NEMA

Requirements Traceability Matrix (RTM)					
FR ID	**Functional Requirement**	**Dialog ID**	**Object ID**	**Object Name**	**Additional Specifications**
			5.8.12	essPrecipitationEndTime	
3.5.4.25	NTCIP 1204 v01-v03 Precipitation Totals	G.1			
			5.8.13	essPrecipitationOneHour	
			5.8.14	essPrecipitationThreeHours	
			5.8.15	essPrecipitationSixHours	
			5.8.16	essPrecipitationTwelveHours	
			5.8.17	essPrecipitation24Hours	
3.5.4.26	NTCIP 1204 v03 Solar Radiation	4.2.13			
			5.9.2	essTotalSun	
			5.9.4	essInstantaneousTerrestrialRadiation	
			5.9.5	essInstantaneousSolarRadiation	
			5.9.6	essTotalRadiation	
			5.9.7	essTotalRadiationPeriod	
3.5.4.27	NTCIP 1204 v03 Weather Block	G.1			
			5.3.9	essWeatherV3Block	
3.5.4.28	NTCIP 1204 v01-v03 Pavement Surface Condition	4.2.14			
			5.11.3.1	essPavementSensorIndex	
			5.11.3.7	essSurfaceStatus	
			5.11.3.8	essSurfaceTemperature	
			5.11.3.15	essPavementSensorError	
			5.11.3.18	pavementSensorModelInformation	
3.5.4.29	NTCIP 1204 v03 Pavement Condition Block	G.1			
			5.11.9	essPavementV3Block	
3.5.4.30	NTCIP 1204 v01-v03 Adjacent Snow Depth	G.1			
			5.8.3	essAdjacentSnowDepth	
3.5.4.31	NTCIP 1204 v01-v03 Roadway Snow Depth	G.1			
			5.8.4	essRoadwaySnowDepth	
			5.8.5	essRoadwaySnowPackDepth	

© 2018 AASHTO / ITE / NEMA
Copy Per RTM Distribution Permission

Requirements Traceability Matrix (RTM)					
FR ID	**Functional Requirement**	**Dialog ID**	**Object ID**	**Object Name**	**Additional Specifications**
3.5.4.32	NTCIP 1204 v01-v03 Roadway Ice Thickness	G.1			
			5.8.10	essIceThickness	
3.5.4.33	NTCIP 1204 v03 Subsurface Condition Block	G.1			
			5.11.8	essSubSurfaceBlock	
3.5.4.34	NTCIP 1204 v01-v03 Cloud Situation	G.1			
			5.9.3	essCloudSituation	
3.5.4.35	NTCIP 1204 v01-v03 Ground State	G.1			
			5.12.2	essMobileObservationGroundState	
3.5.4.36	NTCIP 1204 v01-v03 Pavement State	G.1			
			5.12.3	essMobileObservationPavement	
3.5.4.37	NTCIP 1204 v03 Air Quality Block	G.1			
			5.14.8	essAirQualityBlock	
3.5.4.38	NTCIP 1204 v03 Mobile Pavement Treatment Block	G.1			
			5.13.6	pavementTreatmentBlock	
3.5.4.39	NTCIP 1204 v01-03 Carbon Dioxide Reading	G.1			
			5.14.2	essCO2	
3.5.4.40	NTCIP 1204 v01-03 Nitric Oxide Reading	G.1			
			5.14.3	essNO	
3.5.4.41	NTCIP 1204 v01-03 Ozone Reading	G.1			
			5.14.6	essO3	
3.6	Supplemental Non-Communications Requirements				
3.6.1	Required Number of Atmospheric Pressure Sensors				See Requirement 3.6.1 in PRL
3.6.2	Required Number of Wind Sensors				See Requirement 3.6.2 in PRL
3.6.3	Required Number of Temperature Sensors				See Requirement 3.6.3 in PRL

Copy Per RTM Distribution Permission

© 2018 AASHTO / ITE / NEMA

Requirements Traceability Matrix (RTM)					
FR ID	**Functional Requirement**	**Dialog ID**	**Object ID**	**Object Name**	**Additional Specifications**
3.6.4	Required Number of Humidity Sensors				See Requirement 3.6.4 in PRL
3.6.5	Required Number of Precipitation Sensors				See Requirement 3.6.5 in PRL
3.6.6	Required Number of Solar Radiation Sensors				See Requirement 3.6.6 in PRL
3.6.7	Required Number of Visibility Sensors				See Requirement 3.6.7 in PRL
3.6.8	Required Number of Pavement Sensors				See Requirement 3.6.8 in PRL
3.6.9	Active Pavement Treatment Sensors				
3.6.10	Passive Pavement Treatment Sensors				
3.6.11	Required Number of Subsurface Sensors				See Requirement 3.6.11 in PRL
3.6.12	Required Number of Pavement Treatment Products				See Requirement 3.6.12 in PRL
3.6.13	Required Number of Carbon Monoxide Sensors				See Requirement 3.6.13 in PRL
3.6.14	Required Number of Carbon Dioxide Sensors				See Requirement 3.6.14 in PRL
3.6.15	Required Number of Nitric Oxide Sensors				See Requirement 3.6.15 in PRL
3.6.16	Required Number of Nitrogen Dioxide Sensors				See Requirement 3.6.16 in PRL
3.6.17	Required Number of Sulfur Dioxide Sensors				See Requirement 3.6.17 in PRL
3.6.18	Required Number of Ozone Sensors				See Requirement 3.6.18 in PRL
3.6.19	Required Number of Small Particulate Matter Sensors				See Requirement 3.6.19 in PRL
3.6.20	Required Number of Snapshot Cameras				See Requirement 3.6.20 in PRL
3.6.21	Maximum Response Time for Requests				See Requirement 3.6.21 in PRL

© 2018 AASHTO / ITE / NEMA
Copy Per RTM Distribution Permission

Requirements Traceability Matrix (RTM)					
FR ID	**Functional Requirement**	**Dialog ID**	**Object ID**	**Object Name**	**Additional Specifications**
3.6.22	Required Number of Water Level Sensors				See Requirement 3.6.22 in PRL
3.6.23	Support Camera Number in Filename		5.16.3.6	essSnapshotCameraFilename	This shall be the <camera> field in essSnapshotCameraFilename.
3.6.24	Support Sequence Number in Filename		5.16.3.6	essSnapshotCameraFilename	This shall be the <sequence> field in essSnapshotCameraFilename.
3.6.25	Support Date in Filename		5.16.3.6	essSnapshotCameraFilename	This shall be the <date> field in essSnapshotCameraFilename.
3.6.26	Support Time in Filename		5.16.3.6	essSnapshotCameraFilename	This shall be the <time> field in essSnapshotCameraFilename.
3.6.27	Support Long Filenames				See Requirement 3.6.27 in PRL
3.6.28	Required Number of Small Particulate Matter (2.5) Sensors				See Requirement 3.6.28 in PRL
3.6.29	Maximum Transmission Start Time				See Requirement 3.6.29 in PRL
F.2.1	Generic Architectural Requirements				
F.2.1.1	Support Basic Communications				
F.2.1.1.1	Retrieve Data	G.1			
F.2.1.1.2	Deliver Data	G.3			
F.2.1.1.3	Explore Data	G.2			
F.2.1.2	Support Logged Data				
F.2.1.2.1	Retrieve Current Configuration of Logging Service	F.3.1.2			
			1103v03 - A.7.3.1	eventClassNumber	
			1103v03 - A.7.3.2	eventClassLimit	

Copy Per RTM Distribution Permission
© 2018 AASHTO / ITE / NEMA

Requirements Traceability Matrix (RTM)					
FR ID	**Functional Requirement**	**Dialog ID**	**Object ID**	**Object Name**	**Additional Specifications**
			1103v03 - A.7.3.3	eventClassClearTime	
			1103v03 - A.7.3.4	eventClassDescription	
			1103v03 - A.7.3.6	eventClassNumEvents	
			1103v03 - A.7.5.1	eventConfigID	
			1103v03 - A.7.5.2	eventConfigClass	
			1103v03 - A.7.5.3	eventConfigMode	
			1103v03 - A.7.5.4	eventConfigCompareValue	
			1103v03 - A.7.5.5	eventConfigCompareValue2	
			1103v03 - A.7.5.6	eventConfigCompareOID	
			1103v03 - A.7.5.7	eventConfigLogOID	
			1103v03 - A.7.5.8	eventConfigAction	
			1103v03 - A.7.5.9	eventConfigStatus	
F.2.1.2.2	Configure Logging Service	F.3.1.3			
			1103v03 - A.7.3.1	eventClassNumber	
			1103v03 - A.7.3.2	eventClassLimit	
			1103v03 - A.7.3.3	eventClassClearTime	
			1103v03 - A.7.3.4	eventClassDescription	
			1103v03 - A.7.5.1	eventConfigID	

© 2018 AASHTO / ITE / NEMA
Copy Per RTM Distribution Permission

Requirements Traceability Matrix (RTM)					
FR ID	**Functional Requirement**	**Dialog ID**	**Object ID**	**Object Name**	**Additional Specifications**
			1103v03 - A.7.5.2	eventConfigClass	
			1103v03 - A.7.5.3	eventConfigMode	
			1103v03 - A.7.5.4	eventConfigCompareValue	
			1103v03 - A.7.5.5	eventConfigCompareValue2	
			1103v03 - A.7.5.6	eventConfigCompareOID	
			1103v03 - A.7.5.7	eventConfigLogOID	
			1103v03 - A.7.5.8	eventConfigAction	
			1103v03 - A.7.5.9	eventConfigStatus	
F.2.1.2.3	Retrieve Logged Data	F.3.1.1			
			1103v03 - A.7.3.1	eventClassNumber	
			1103v03 - A.7.3.5	eventClassNumRowsInLog	
			1103v03 - A.7.3.6	eventClassNumEvents	
			1103v03 - A.7.7.1	eventLogClass	
			1103v03 - A.7.7.2	eventLogNumber	
			1103v03 - A.7.7.3	eventLogID	
			1103v03 - A.7.7.4	eventLogTime	
			1103v03 - A.7.7.5	eventLogValue	
			1103v03 - A.7.8	numEvents	
F.2.1.2.4	Clear Log	G.3			

Copy Per RTM Distribution Permission
© 2018 AASHTO / ITE / NEMA

Requirements Traceability Matrix (RTM)					
FR ID	**Functional Requirement**	**Dialog ID**	**Object ID**	**Object Name**	**Additional Specifications**
			1103v03 - A.7.3.1	eventClassNumber	
			1103v03 - A.7.3.3	eventClassClearTime	
F.2.1.2.5	Retrieve Capabilities of Event Logging Service	G.1			
			1103v03 - A.7.2	maxEventClasses	
			1103v03 - A.7.4	maxEventLogConfigs	
			1103v03 - A.7.6	maxEventLogSize	
F.2.1.2.6	Retrieve Total Number of Logged Events	G.1			
			1103v03 - A.7.3.1	eventClassNumber	
			1103v03 - A.7.3.5	eventClassNumRowsInLog	
			1103v03 - A.7.3.6	eventClassNumEvents	
			1103v03 - A.7.8	numEvents	
F.2.1.3	Manage Exception Reporting Requirements				
F.2.1.3.1	Enable/Disable Exception Reporting	G.3			
			1103v03 - A.9.3.1	trapControl	
F.2.1.3.2	Configure Exception Reporting Condition Requirements				
F.2.1.3.2.1	Configure a Monitored (Watch) Object	F.3.2.3			
			1103v03 - A.7.5	eventLogConfigTable	
			1103v03 - A.7.5.1	eventConfigID	

© 2018 AASHTO / ITE / NEMA
Copy Per RTM Distribution Permission

Requirements Traceability Matrix (RTM)					
FR ID	**Functional Requirement**	**Dialog ID**	**Object ID**	**Object Name**	**Additional Specifications**
			1103v03 - A.7.5.2	eventConfigClass	
			1103v03 - A.7.5.3	eventConfigMode	
			1103v03 - A.7.5.4	eventConfigCompareValue	
			1103v03 - A.7.5.5	eventConfigCompareValue2	
			1103v03 - A.7.5.6	eventConfigCompareOID	
			1103v03 - A.7.5.7	eventConfigLogOID	
			1103v03 - A.7.5.8	eventConfigAction	
			1103v03 - A.9.1.3	watchObjectDefinitionTable	
			1103v03 - A.9.1.3.1	watchID	
			1103v03 - A.9.1.3.2	watchStatus	
			1103v03 - A.9.1.3.3	watchBlock	
			1103v03 - A.9.1.3.4	watchOID	
F.2.1.3.2.2	Configure a Monitored Group of Objects (Watch Block)	F.3.2.3			
			1103v03 - A.7.5	eventLogConfigTable	
			1103v03 - A.7.5.1	eventConfigID	
			1103v03 - A.7.5.2	eventConfigClass	
			1103v03 - A.7.5.3	eventConfigMode	
			1103v03 - A.7.5.4	eventConfigCompareValue	

Copy Per RTM Distribution Permission
© 2018 AASHTO / ITE / NEMA

Requirements Traceability Matrix (RTM)					
FR ID	**Functional Requirement**	**Dialog ID**	**Object ID**	**Object Name**	**Additional Specifications**
			1103v03 - A.7.5.5	eventConfigCompareValue2	
			1103v03 - A.7.5.6	eventConfigCompareOID	
			1103v03 - A.9.1.3	watchObjectDefinitionTable	
			1103v03 - A.9.1.4	watchBlockTable	
			1103v03 - A.9.1.4.1	watchBlockNumber	
			1103v03 - A.9.1.4.2	watchBlockStatus	
			1103v03 - A.9.1.4.3	watchBlockDescription	
			1103v03 - A.9.1.4.4	watchBlockValue	
F.2.1.3.3	Configure Exception Reporting Data Transmission Requirements				
F.2.1.3.3.1	Configure a Report Object	F.3.2.3			
			1103v03 - A.7.5	eventLogConfigTable	
			1103v03 - A.7.5.1	eventConfigID	
			1103v03 - A.7.5.7	eventConfigLogOID	
			1103v03 - A.7.5.8	eventConfigAction	
			1103v03 - A.9.2.3	reportObjectDefinitionTable	
			1103v03 - A.9.2.3.1	reportID	
			1103v03 - A.9.2.3.2	reportStatus	
			1103v03 - A.9.2.3.3	reportBlock	

© 2018 AASHTO / ITE / NEMA
Copy Per RTM Distribution Permission

Requirements Traceability Matrix (RTM)					
FR ID	**Functional Requirement**	**Dialog ID**	**Object ID**	**Object Name**	**Additional Specifications**
			1103v03 - A.9.2.3.4	reportOID	
			1103v03 - A.9.3.7	trapTable	
			1103v03 - A.9.3.7.1	trapDestEnable	
F.2.1.3.3.2	Configure a Report Group of Objects (Block)	F.3.2.3			
			1103v03 - A.7.5	eventLogConfigTable	
			1103v03 - A.7.5.1	eventConfigID	
			1103v03 - A.7.5.7	eventConfigLogOID	
			1103v03 - A.7.5.8	eventConfigAction	
			1103v03 - A.9.2.4	reportBlockTable	
			1103v03 - A.9.2.4.1	reportBlockNumber	
			1103v03 - A.9.2.4.2	reportBlockStatus	
			1103v03 - A.9.2.4.3	reportBlockDescription	
			1103v03 - A.9.2.4.4	reportBlockValue	
F.2.1.3.4	Configure Exception Reporting Destination	F.3.2.3			
			1103v03 - A.6.2	logicalNameTranslationTable	
			1103v03 - A.6.2.1	logicalNameTranslationIndex	
			1103v03 - A.6.2.2	logicalNameTranslationLogicalName	
			1103v03 - A.6.2.3	logicalNameTranslationNetworkAddress	

Copy Per RTM Distribution Permission
© 2018 AASHTO / ITE / NEMA

Requirements Traceability Matrix (RTM)					
FR ID	**Functional Requirement**	**Dialog ID**	**Object ID**	**Object Name**	**Additional Specifications**
			1103v03 - A.6.2.4	logicalNameTranslationStatus	
			1103v03 - A.7.5.1	eventConfigID	
			1103v03 - A.9.3.6	trapMgmtTable	
			1103v03 - A.9.3.6.1	trapMgmtManagerIndex	
			1103v03 - A.9.3.6.2	trapMgmtManagerPointer	
F.2.1.3.5	Configure Exception Reporting Community	F.3.2.3			
			1103v03 - A.8.3	communityNameTable	
			1103v03 - A.8.3.1	communityNameIndex	
			1103v03 - A.8.3.2	communityNameUser	
			1103v03 - A.8.3.3	communityNameAccessMask	
			1103v03 - A.9.3.6	trapMgmtTable	
			1103v03 - A.9.3.6.1	trapMgmtManagerIndex	
			1103v03 - A.9.3.6.3	trapMgmtCommunityNamePointer	
F.2.1.3.6	Configure Exception Reporting Operational Mode Requirements				
F.2.1.3.6.1	Configure Exception Reporting Acknowledgement	F.3.2.3			
			1103v03 - A.7.5.1	eventConfigID	
			1103v03 - A.9.3.6	trapMgmtTable	
			1103v03 - A.9.3.6.1	trapMgmtManagerIndex	

© 2018 AASHTO / ITE / NEMA
Copy Per RTM Distribution Permission

Requirements Traceability Matrix (RTM)					
FR ID	**Functional Requirement**	**Dialog ID**	**Object ID**	**Object Name**	**Additional Specifications**
			1103v03 - A.9.3.6.7	trapMgmtMaxRetries	
			1103v03 - A.9.3.6.8	trapMgmtRepeatInterval	
			1103v03 - A.9.3.6.9	trapMgmtDelta	
			1103v03 - A.9.3.7	trapTable	
			1103v03 - A.9.3.7.2	trapMode	
F.2.1.3.6.2	Configure Exception Reporting Aggregation	F.3.2.3			
			1103v03 - A.9.3.6	trapMgmtTable	
			1103v03 - A.9.3.6.1	trapMgmtManagerIndex	
			1103v03 - A.9.3.6.7	trapMgmtMaxRetries	
			1103v03 - A.9.3.6.8	trapMgmtRepeatInterval	
			1103v03 - A.9.3.6.9	trapMgmtDelta	
			1103v03 - A.9.3.7	trapTable	
			1103v03 - A.9.3.7.2	trapMode	
			1103v03 - A.9.3.7.3	trapAggregationTime	
F.2.1.3.6.3	Configure Exception Reporting Queue	F.3.2.3			
			1103v03 - A.9.3.6	trapMgmtTable	
			1103v03 - A.9.3.6.1	trapMgmtManagerIndex	
			1103v03 - A.9.3.6.7	trapMgmtMaxRetries	

Copy Per RTM Distribution Permission
© 2018 AASHTO / ITE / NEMA

Requirements Traceability Matrix (RTM)					
FR ID	**Functional Requirement**	**Dialog ID**	**Object ID**	**Object Name**	**Additional Specifications**
			1103v03 - A.9.3.6.8	trapMgmtRepeatInterval	
			1103v03 - A.9.3.6.9	trapMgmtDelta	
			1103v03 - A.9.3.6.10	trapMgmtQueueDepth	
			1103v03 - A.9.3.7	trapTable	
			1103v03 - A.9.3.7.2	trapMode	
			1103v03 - A.9.3.7.3	trapAggregationTime	
F.2.1.3.6.4	Configure Exception Reporting (Forced)	F.3.2.3			
			1103v03 - A.9.3.7	trapTable	
			1103v03 - A.9.3.7.2	trapMode	
			1103v03 - A.9.3.7.3	trapAggregationTime	
F.2.1.3.6.5	Configure Exception Reporting Communications	F.3.2.3			
			1103v03 - A.9.3.6	trapMgmtTable	
			1103v03 - A.9.3.6.1	trapMgmtManagerIndex	
			1103v03 - A.9.3.6.4	trapMgmtApplicationProtocol	
			1103v03 - A.9.3.6.5	trapMgmtTransportProtocol	
			1103v03 - A.9.3.6.6	trapMgmtPortNum	
F.2.1.3.6.6	Configure Exception Reporting - Maximum Rate	F.3.2.3			
			1103v03 - A.9.3.6	trapMgmtTable	

© 2018 AASHTO / ITE / NEMA
Copy Per RTM Distribution Permission

Requirements Traceability Matrix (RTM)					
FR ID	**Functional Requirement**	**Dialog ID**	**Object ID**	**Object Name**	**Additional Specifications**
			1103v03 - A.9.3.6.1	trapMgmtManagerIndex	
			1103v03 - A.9.3.6.12	trapMgmtAntiStreamRate	
F.2.1.3.7	Determine Watch Block Capabilities	G.1			
			1103v03 - A.7.4	maxEventLogConfigs	
			1103v03 - A.9.1.1	maxWatchObjects	
			1103v03 - A.9.1.2	maxWatchBlocks	
F.2.1.3.8	Determine Report Block Capabilities	G.1			
			1103v03 - A.9.2.1	maxReportObjects	
			1103v03 - A.9.2.2	maxReportBlocks	
F.2.1.3.9	Determine Exception Reporting Trap Channel Capabilities	G.1			
			1103v03 - A.9.3.3	trapMgmtMaxEntries	
F.2.1.3.10	Determine Exception Reporting Aggregation Capabilities	G.1			
			1103v03 - A.9.3.4	trapMaxAggregationEvents	
			1103v03 - A.9.3.5	trapMaxAggregationSize	
F.2.1.3.11	Determine Event Reporting Latency	G.1			
			1103v03 - A.7.7.8	eventTimeLatency	
F.2.1.3.12	Monitor Communications Link State	F.3.2.1			
			1103v03 - A.9.3.6	trapMgmtTable	
			1103v03 - A.9.3.6.1	trapMgmtManagerIndex	
			1103v03 - A.9.3.6.11	trapMgmtLinkStateStatus	

Copy Per RTM Distribution Permission
© 2018 AASHTO / ITE / NEMA

Requirements Traceability Matrix (RTM)					
FR ID	**Functional Requirement**	**Dialog ID**	**Object ID**	**Object Name**	**Additional Specifications**
F.2.1.3.13	Monitor Exception Based Reporting Status				
F.2.1.3.13.1	Monitor Exception Based Communications Link Error	F.3.2.1			
			1103v03 - A.9.3.6	trapMgmtTable	
			1103v03 - A.9.3.6.1	trapMgmtManagerIndex	
			1103v03 - A.9.3.6.13	trapMgmtErrStatus	
F.2.1.3.13.2	Monitor Exception Based Maximum Rate Exceeded	F.3.2.1			
			1103v03 - A.9.3.6	trapMgmtTable	
			1103v03 - A.9.3.6.1	trapMgmtManagerIndex	
			1103v03 - A.9.3.6.13	trapMgmtErrStatus	
F.2.1.3.13.3	Monitor Exception Based Queue Full Error	F.3.2.1			
			1103v03 - A.9.3.6	trapMgmtTable	
			1103v03 - A.9.3.6.1	trapMgmtManagerIndex	
			1103v03 - A.9.3.6.13	trapMgmtErrStatus	
F.2.1.3.14	Monitor Exception Based Transmissions	F.3.2.1			
			1103v03 - A.9.3.6	trapMgmtTable	
			1103v03 - A.9.3.6.1	trapMgmtManagerIndex	
			1103v03 - A.9.3.6.16	trapMgmtSeqNum	
F.2.1.3.15	Monitor Number of Lost Queued Exception Based Reports	F.3.2.1			

© 2018 AASHTO / ITE / NEMA
Copy Per RTM Distribution Permission

Requirements Traceability Matrix (RTM)					
FR ID	**Functional Requirement**	**Dialog ID**	**Object ID**	**Object Name**	**Additional Specifications**
			1103v03 - A.9.3.6	trapMgmtTable	
			1103v03 - A.9.3.6.1	trapMgmtManagerIndex	
			1103v03 - A.9.3.6.14	trapMgmtLostTraps	
F.2.1.3.16	Monitor Number of Exception Based Events	F.3.2.1			
			1103v03 - A.7.5.1	eventConfigID	
			1103v03 - A.9.3.6	trapMgmtTable	
			1103v03 - A.9.3.6.1	trapMgmtManagerIndex	
			1103v03 - A.9.3.7	trapTable	
			1103v03 - A.9.3.7.4	trapCounter	
F.2.1.3.17	Monitor Exception Based Data	G.3			
			1103v03 - A.9.3.2	trapData	
			1103v03 - A.9.4.1	trapEvent	
F.2.1.3.18	Clear Event Class	G.3			
			1103v03 - A.9.5.1	eventClearClasses	
F.2.1.3.19	Clear Event Configuration	G.3			
			1103v03 - A.9.5.2	eventClearConfiguration	
F.2.1.3.20	Clear Event Log Table	G.3			
			1103v03 - A.9.5.3	eventClearLog	
F.2.1.3.21	Clear Report Objects	G.3			
			1103v03 - A.9.5.4	clearReportObjects	
F.2.1.3.22	Clear Report Blocks	G.3			

Copy Per RTM Distribution Permission
© 2018 AASHTO / ITE / NEMA

Requirements Traceability Matrix (RTM)					
FR ID	**Functional Requirement**	**Dialog ID**	**Object ID**	**Object Name**	**Additional Specifications**
			1103v03 - A.9.5.5	clearReportBlockTable	
F.2.1.3.23	Clear Watch Objects	G.3			
			1103v03 - A.9.5.6	clearWatchObjects	
F.2.1.3.24	Clear Watch Blocks	G.3			
			1103v03 - A.9.5.7	clearWatchBlockTable	
F.2.1.3.25	Clear Exception Based Reporting Tables	G.3			
			1103v03 - A.9.5.8	clearTrapMgmtTable	
F.2.1.3.26	Reset a Communications Link	F.3.2.3			
			1103v03 - A.9.3.6	trapMgmtTable	
			1103v03 - A.9.3.6.1	trapMgmtManagerIndex	
			1103v03 - A.9.3.6.17	trapMgmtSeqNumAck	
F.2.2	Generic Functional Requirements				
F.2.2.1	Generic Configuration Requirements				
F.2.2.1.1	Retrieve Device Component Information	F.3.2.1			
			1201v03 - 2.2.2	globalMaxModules	
			1201v03 - 2.2.3.1	moduleNumber	
			1201v03 - 2.2.3.2	moduleDeviceNode	
			1201v03 - 2.2.3.3	moduleMake	
			1201v03 - 2.2.3.4	moduleModel	
			1201v03 - 2.2.3.5	moduleVersion	

© 2018 AASHTO / ITE / NEMA
Copy Per RTM Distribution Permission

Requirements Traceability Matrix (RTM)					
FR ID	**Functional Requirement**	**Dialog ID**	**Object ID**	**Object Name**	**Additional Specifications**
			1201v03 - 2.2.3.6	moduleType	
F.2.2.1.2	Retrieve Device Configuration Identifier	G.1			
			1201v03 - 2.2.1	globalSetIDParameter	
F.2.2.1.3	Retrieve Supported Standards	G.1			
			1201v03 - 2.2.4	controllerBaseStandards	
F.2.2.1.4	Retrieve System Name	G.1			
			RFC1213 Clause 6	sysName	
F.2.2.1.5	Manage Time				
F.2.2.1.5.1	Set Time	G.3			
			1201v03 - 2.4.1	globalTime	
			1201v03 - 2.4.2	globalDaylightSaving	
			1201v03 - 2.4.8.1	maxDaylightSavingEntries	
			1201v03 - 2.4.8.2.1	dstEntryNumber	
			1201v03 - 2.4.8.2.2	dstBeginMonth	
			1201v03 - 2.4.8.2.3	dstBeginOccurrences	
			1201v03 - 2.4.8.2.4	dstBeginDayOfWeek	
			1201v03 - 2.4.8.2.5	dstBeginDayOfMonth	
			1201v03 - 2.4.8.2.6	dstBeginSecondsToTransition	
			1201v03 - 2.4.8.2.7	dstEndMonth	
			1201v03 - 2.4.8.2.8	dstEndOccurrences	
			1201v03 - 2.4.8.2.9	dstEndDayOfWeek	
			1201v03 - 2.4.8.2.10	dstEndDayOfMonth	

Copy Per RTM Distribution Permission
© 2018 AASHTO / ITE / NEMA

Requirements Traceability Matrix (RTM)					
FR ID	**Functional Requirement**	**Dialog ID**	**Object ID**	**Object Name**	**Additional Specifications**
			1201v03 - 2.4.8.2.11	dstEndSecondsToTransition	
			1201v03 - 2.4.8.2.12	dstSecondsToAdjust	
F.2.2.1.5.2	Retrieve Current Time	G.1			
			1201v03 - 2.4.1	globalTime	
			1201v03 - 2.4.2	globalDaylightSaving	
			1201v03 - 2.4.8.1	maxDaylightSavingEntries	
			1201v03 - 2.4.8.2.1	dstEntryNumber	
			1201v03 - 2.4.8.2.2	dstBeginMonth	
			1201v03 - 2.4.8.2.3	dstBeginOccurrences	
			1201v03 - 2.4.8.2.4	dstBeginDayOfWeek	
			1201v03 - 2.4.8.2.5	dstBeginDayOfMonth	
			1201v03 - 2.4.8.2.6	dstBeginSecondsToTransition	
			1201v03 - 2.4.8.2.7	dstEndMonth	
			1201v03 - 2.4.8.2.8	dstEndOccurrences	
			1201v03 - 2.4.8.2.9	dstEndDayOfWeek	
			1201v03 - 2.4.8.2.10	dstEndDayOfMonth	
			1201v03 - 2.4.8.2.11	dstEndSecondsToTransition	
			1201v03 - 2.4.8.2.12	dstSecondsToAdjust	
F.2.2.1.6	Retrieve External Port Information	F.3.2.1			
			1201v03 - 2.9.2	maxAuxIOv2TableNumAnalogPorts	

© 2018 AASHTO / ITE / NEMA
Copy Per RTM Distribution Permission

Requirements Traceability Matrix (RTM)					
FR ID	**Functional Requirement**	**Dialog ID**	**Object ID**	**Object Name**	**Additional Specifications**
			1201v03 - 2.9.3.1	auxIOv2PortType	
			1201v03 - 2.9.3.2	auxIOv2PortNumber	
			1201v03 - 2.9.3.3	auxIOv2PortDescription	
			1201v03 - 2.9.3.4	auxIOv2PortResolution	
			1201v03 - 2.9.3.6	auxIOv2PortDirection	
F.2.2.1.7	Configure Port Information	F.3.2.3			
			1201v03 - 2.9.3.1	auxIOv2PortType	
			1201v03 - 2.9.3.2	auxIOv2PortNumber	
			1201v03 - 2.9.3.3	auxIOv2PortDescription	
F.2.2.2	Generic Status Monitoring Requirements				
F.2.2.2.1	Monitor Status of External Device	F.3.2.1			
			1201v03 - 2.9.3.5	auxIOv2PortValue	
			1201v03 - 2.9.3.7	auxIOv2PortLastCommandedState	
F.2.2.3	Generic Data Retrieval Requirements				
F.2.2.4	Generic Control Requirements				
F.2.2.4.1	Control External Device	F.3.2.3			
			1201v03 - 2.10.3.1	auxIOPortType	
			1201v03 - 2.10.3.2	auxIOPortNumber	
			1201v03 - 2.10.3.5	auxIOValue	
F.2.3	Generic Supplemental Requirements				

© 2018 AASHTO / ITE / NEMA

Requirements Traceability Matrix (RTM)					
FR ID	**Functional Requirement**	**Dialog ID**	**Object ID**	**Object Name**	**Additional Specifications**
F.2.3.1	Supplemental Requirements for Event Monitoring				
F.2.3.1.1	Record and Timestamp Events				
F.2.3.1.2	Support a Number of Event Classes				See Requirement F.2.3.1.2 in PRL
F.2.3.1.3	Support a Number of Event Types to Monitor				See Requirement F.2.3.1.3 in PRL
F.2.3.1.4	Support Monitoring of Event Types				
F.2.3.1.4.1	Support On-Change Events				
F.2.3.1.4.2	Support Greater Than Events				
F.2.3.1.4.3	Support Less Than Events				
F.2.3.1.4.4	Support Hysteresis Events				
F.2.3.1.4.5	Support Periodic Events				
F.2.3.1.4.6	Support Bit Flag Events				
F.2.3.1.5	Support Event Monitoring on Any Data				
F.2.3.1.6	Support a Number of Events to Store in Log				See Requirement F.2.3.1.6 in PRL
F.2.3.2	Required Number of Auxiliary Ports				See Requirement F.2.3.2 in PRL
F.2.3.3	Atomic Operations				

© 2018 AASHTO / ITE / NEMA
Copy Per RTM Distribution Permission

Annex B
Object Tree [Informative]

Figure 25 provides a pictorial representation of the Environmental Sensor Station Object Tree Structure. The tree structure identifies how the object definitions are combined under specific nodes.

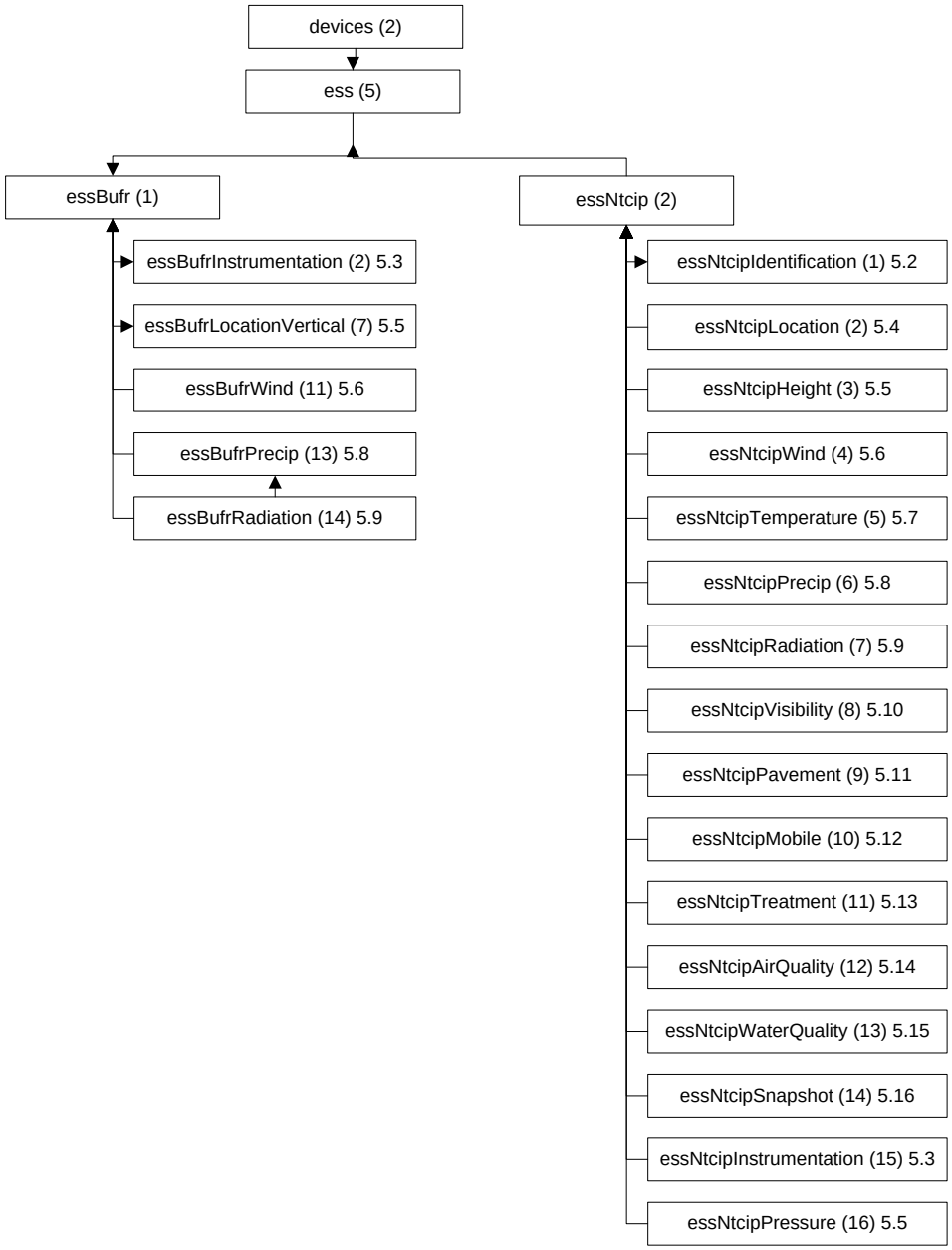

Figure 25 Object Tree for NTCIP 1204 v04

 © 2018 AASHTO / ITE / NEMA

Annex C
Test Procedures [Normative]

C.1 Purpose

Annex C defines the detailed, but generic, test procedures for testing an implementation of NTCIP 1204 v04.

C.1.1 Scope

Annex C defines test procedures in a format that is consistent with NTCIP 8007 v01and that covers the entire scope of NTCIP 1204 v04. It includes tests of some of the features defined in NTCIP 1201 v03, but only to the extent that these features have been incorporated by reference in NTCIP 1204 v04.

The procedures are intended to be used as a portion of the overall set of tests that would be performed during the component testing of a device.

> Note: The NTCIP 8007 v01 test procedure format focuses on the testing of a device and is largely silent on testing a management station. Test procedures for the component testing of a management station and or test procedures for integration testing may be added at a future date.

C.1.2 Keywords

C.1.2.1 Additional Keywords

Keywords are words that are presented in all capital letters within the test procedures. Definitions of keywords are presented below. Keywords that are not defined below are defined in NTCIP 8007 v01.

Keyword	Definition
APPROPRIATE	This keyword is intended to direct the tester to ensure that the device is reporting the value provided by the sensor or set by the management station, not to test the accuracy of the sensor. The exact mechanism used to determine the appropriate value is beyond the scope of NTCIP 1204 v04, but should be defined within a test plan that references these procedures. For example, the appropriate values may be determined by using external software to check the values currently stored in the device, providing a subjective assessment of current conditions, emulating sensor inputs to create known values, etc. The mechanism chosen for a given test may be dependent upon the environment within which the device is being tested.
IF	This keyword causes the user (or application) to perform a comparison and take one action if the comparison evaluates to true and another action if the comparison evaluates to false. It is comparable to the "if…else…" expression in C.
FOR EACH	This keyword causes the user (or application) to begin a looping process that increments through a series of values. It is comparable to the "for…next" expression in C

C.1.2.2 Keyword Combinations

These test procedures frequently use the "SET-UP" and "VERIFY" keywords as defined in NTCIP 8007 v01 in the definition of a single step. When used jointly in these procedures, the failure logic of the "SET-

© 2022 AASHTO / ITE / NEMA Copy Per TRF Distribution Permission

UP" keyword shall override that of the "VERIFY" keyword. In other words, a failure of a step that uses both the "SET-UP" and "VERIFY" keywords means that the test case neither passes nor fails.

C.1.3 Rules for Following Test Procedures

To component test a device for conformance to NTCIP 1204 v04, the user shall follow the steps as written, filling in the pass/fail information in the 'Device' column.

C.2 Testing Requirements

C.2.1 Field Device Test Environment

All Test Cases covered by this Testing Requirements documentation require the Device Under Test (DUT) to be configured for the site and connected to a test application as depicted in Figure 26. A data analyzer may also be used to capture the data exchanged between the two components. The test environment should be designed to minimize any complicating factors that may result in anomalies unrelated to the specific test case. Failure to isolate such variables in the test environment may result in false results to the test. For example, the device may be conformant with NTCIP 1204 v04, but communication delays could result in timeouts and be misinterpreted as failures.

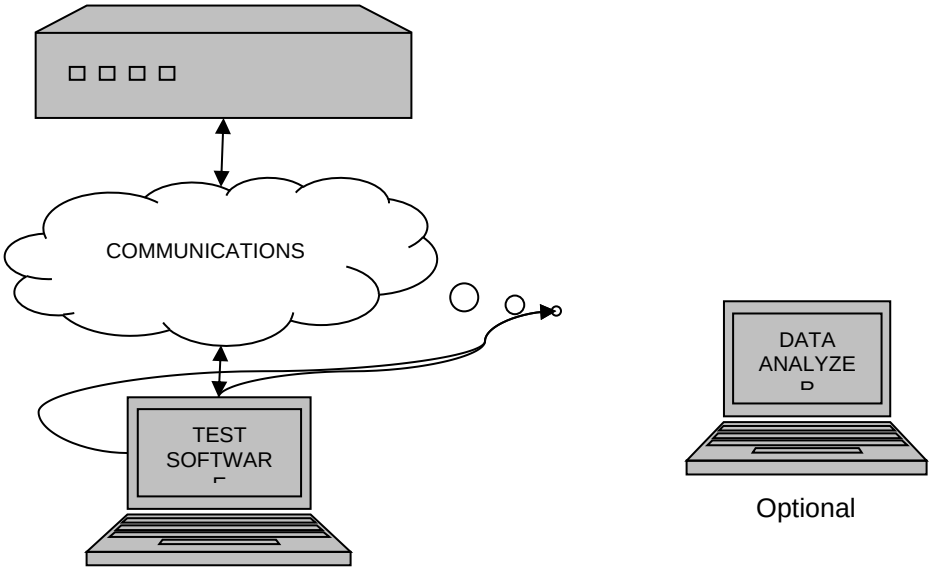

Figure 26 Field Device Test Environment

The following pre-conditions apply to all test cases unless otherwise defined:

a) All components should be turned on and be provided sufficient time to start up prior to starting any test case
b) The test software, data analyzer, and DUT should all be configured to use a common set of communication settings, including data rates, lower layer protocols, community names, etc.

C.2.2 Traceability Table

Annex C.2.2 defines the relationships between the Requirements of NTCIP 1204 v04 Section 3 and the Test Cases presented in Annex C.2.3.

© 2022 AASHTO / ITE / NEMA

To confirm that an implementation fulfills a requirement, the DUT shall successfully pass all test cases that trace to that requirement.

Table 36 Requirements to Test Case Traceability Table

Requirement		Test Case	
ID	**Title**	**ID**	**Title**
3.4	**Architectural Requirements**		
3.5	**Data Exchange and Operational Environment Requirements**		
3.5.1	ESS Manager Requirements		
3.5.1.1	ESS Configuration Requirements		
3.5.1.1.1	Retrieve ESS Characteristics		
		C.2.3.1.1	ESS Characteristics
3.5.1.1.2	Retrieve Compressed Station Metadata [Version 03 - Deprecated in v04]		
3.5.1.1.3	Configure ESS Manager		
		C.2.3.1.1	ESS Characteristics
3.5.1.2	ESS Status Monitoring Requirements		
3.5.1.2.1	Retrieve ESS Door Status		
		C.2.3.1.3	Retrieve ESS Door Status
3.5.1.2.2	Retrieve Battery Status		
		C.2.3.1.4	Retrieve Battery Status
3.5.1.2.3	Retrieve Line Volts		
		C.2.3.1.5	Retrieve Line Volts
3.5.1.2.4	Retrieve ESS Status		
		C.2.3.1.8	Retrieve ESS Status
3.5.1.3	ESS Data Retrieval Requirements		
3.5.1.3.1	Retrieve Mobile ESS Movement		
		C.2.3.1.6	Retrieve Mobile ESS Movement
3.5.1.3.2	Retrieve Mobile Treatment Information [Obsolete][Deprecated in v03]		
3.5.1.3.3	Retrieve Compressed Mobile ESS Data [Version 03 - Deprecated in v04]		
3.5.1.4	ESS Control Requirements		
3.5.2	Sensor Manager Requirements		
3.5.2.1	Sensor Configuration Requirements		
3.5.2.1.1	Retrieve Atmospheric Pressure Height [Versions 01 to 03 Only - Deprecated in v04]		
3.5.2.1.2	Retrieve Metadata for Each Wind Sensor - Text Description		
		C.2.3.2.2	Retrieve Metadata for Each Wind Sensor
3.5.2.1.3	Retrieve Temperature Sensor Metadata - Height		
		C.2.3.2.3	Retrieve Temperature Sensor Metadata

© 2022 AASHTO / ITE / NEMA
Copy Per TRF Distribution Permission

Requirement		Test Case	
ID	**Title**	**ID**	**Title**
3.5.2.1.4	Retrieve Pavement Sensor Metadata		
		C.2.3.2.4	Retrieve Pavement Sensor Metadata
3.5.2.1.5	Retrieve Subsurface Sensor Metadata - Text Description		
		C.2.3.2.5	Retrieve Subsurface Sensor Metadata
3.5.2.1.6	Configure Pavement Sensor		
		C.2.3.2.6	Configure Pavement Sensor
3.5.2.1.7	Configure Subsurface Sensor - Text Description		
		C.2.3.2.7	Configure Subsurface Sensor
3.5.2.1.8	Configure Passive Ice Detection Logic		
		C.2.3.2.8	Configure Passive Ice Detection Logic
3.5.2.1.9	Configure Snapshot Camera		
		C.2.3.2.9	Configure Snapshot Camera
3.5.2.1.10	Manage Atmospheric Pressure Metadata		
3.5.2.1.10.1	Retrieve Atmospheric Pressure Metadata - Location		
		C.2.3.2.10	Retrieve Atmospheric Pressure Metadata - Location
3.5.2.1.10.2	Retrieve Atmospheric Pressure Metadata - Sensor Information		
		C.2.3.2.11	Retrieve Atmospheric Pressure Metadata - Sensor Information
3.5.2.1.10.3	Configure Atmospheric Pressure Metadata - Location		
		C.2.3.2.12	Configure Atmospheric Pressure Metadata - Location
3.5.2.1.11	Manage Wind Sensor Metadata		
3.5.2.1.11.1	Retrieve Metadata for Each Wind Sensor - Location		
		C.2.3.2.13	Retrieve Wind Sensor Metadata - Location
3.5.2.1.11.2	Retrieve Metadata for Each Wind Sensor - Sensor Information		
		C.2.3.2.14	Retrieve Wind Sensor Metadata – Sensor Information
3.5.2.1.11.3	Configure Wind Sensor Metadata - Location		
		C.2.3.2.15	Configure Wind Sensor Metadata - Location
3.5.2.1.12	Manage Temperature Sensor Metadata		
3.5.2.1.12.1	Retrieve Temperature Sensor Metadata - Location		
		C.2.3.2.16	Retrieve Temperature Sensor Metadata - Location
3.5.2.1.12.2	Retrieve Temperature Sensor Metadata - Sensor Information		

Copy Per TRF Distribution Permission
© 2022 AASHTO / ITE / NEMA

Requirement		Test Case	
ID	Title	ID	Title
		C.2.3.2.17	Retrieve Temperature Sensor Metadata – Sensor Information
3.5.2.1.12.3	Configure Temperature Sensor Metadata - Location		
		C.2.3.2.18	Configure Temperature Sensor Metadata - Location
3.5.2.1.13	Manage Humidity Sensor Metadata		
3.5.2.1.13.1	Retrieve Humidity Sensor Metadata - Location		
		C.2.3.2.19	Retrieve Humidity Sensor Metadata - Location
3.5.2.1.13.2	Retrieve Humidity Sensor Metadata - Sensor Information		
		C.2.3.2.20	Retrieve Humidity Sensor Metadata - Sensor Information
3.5.2.1.13.3	Configure Humidity Sensor Metadata - Location		
		C.2.3.2.21	Configure Humidity Sensor Metadata - Location
3.5.2.1.14	Manage Precipitation Sensor Metadata		
3.5.2.1.14.1	Retrieve Precipitation Sensor Metadata - Location		
		C.2.3.2.22	Retrieve Precipitation Sensor Metadata – Location
3.5.2.1.14.2	Retrieve Precipitation Sensor Metadata - Sensor Information		
		C.2.3.2.23	Retrieve Precipitation Sensor Metadata - Sensor Information
3.5.2.1.14.3	Configure Precipitation Sensor Metadata - Location		
		C.2.3.2.24	Configure Precipitation Sensor Metadata - Location
3.5.2.1.14.4	Configure Precipitation Total User Specified Period		
		C.2.3.2.25	Configure Precipitation Sensor Total User Specified Period
3.5.2.1.15	Manage Solar Radiation Sensor Metadata		
3.5.2.1.15.1	Retrieve Solar Radiation Sensor Metadata - Location		
		C.2.3.2.26	Retrieve Solar Radiation Sensor Metadata - Location
3.5.2.1.15.2	Retrieve Solar Radiation Sensor Metadata - Sensor Information		
		C.2.3.2.27	Retrieve Solar Radiation Sensor Metadata - Sensor Information
3.5.2.1.15.3	Configure Solar Radiation Sensor Metadata - Location		
		C.2.3.2.28	Configure Solar Radiation Sensor Metadata - Location

© 2022 AASHTO / ITE / NEMA

Requirement		Test Case	
ID	Title	ID	Title
3.5.2.1.16	Manage Visibility Sensor Metadata		
3.5.2.1.16.1	Retrieve Visibility Sensor Metadata - Location		
		C.2.3.2.29	Retrieve Visibility Sensor Metadata - Location
3.5.2.1.16.2	Retrieve Visibility Sensor Metadata - Sensor Information		
		C.2.3.2.30	Retrieve Visibility Sensor Metadata - Sensor Information
3.5.2.1.16.3	Configure Visibility Sensor Metadata - Location		
		C.2.3.2.31	Configure Visibility Sensor Metadata - Location
3.5.2.1.17	Manage Pavement Sensor Metadata		
3.5.2.1.17.1	Retrieve Pavement Sensor Metadata - Location		
		C.2.3.2.32	Retrieve Pavement Sensor Metadata - Location
3.5.2.1.17.2	Retrieve Pavement Sensor Metadata - Sensor Information		
		C.2.3.2.33	Retrieve Pavement Sensor Metadata - Sensor Information
3.5.2.1.17.3	Configure Pavement Sensor - Location		
		C.2.3.2.34	Configure Pavement Sensor Metadata - Location
3.5.2.1.18	Manage Subsurface Sensor Metadata		
3.5.2.1.18.1	Retrieve Subsurface Sensor Metadata - Location		
		C.2.3.2.35	Retrieve SubSurface Sensor Metadata - Location
3.5.2.1.18.2	Retrieve Subsurface Sensor Metadata - Sensor Information		
		C.2.3.2.36	Retrieve SubSurface Sensor Metadata - Sensor Information
3.5.2.1.18.3	Configure Subsurface Sensor - Location		
		C.2.3.2.37	Configure SubSurface Sensor Metadata - Location
3.5.2.1.19	Manage Air Quality Sensor Metadata		
3.5.2.1.19.1	Retrieve Air Quality Sensor Metadata - Location		
		C.2.3.2.38	Retrieve Air Quality Sensor Metadata - Location
3.5.2.1.19.2	Retrieve Air Quality Sensor Metadata - Sensor Information		
		C.2.3.2.39	Retrieve Air Quality Sensor Metadata - Sensor Information
3.5.2.1.19.3	Configure Air Quality Sensor Metadata - Location		

Copy Per TRF Distribution Permission © 2022 AASHTO / ITE / NEMA

Requirement		Test Case	
ID	Title	ID	Title
		C.2.3.2.40	Configure Air Quality Sensor Metadata - Location
3.5.2.1.20	Manage Water Level Sensor Metadata		
3.5.2.1.20.1	Retrieve Water Level Metadata - Location		
		C.2.3.2.41	Retrieve Water Level Sensor Metadata - Location
3.5.2.1.20.2	Retrieve Water Level Metadata - Sensor Information		
		C.2.3.2.42	Retrieve Water Level Sensor Metadata - Sensor Information
3.5.2.1.20.3	Retrieve Water Level Metadata - Warning Level		
		C.2.3.2.43	Retrieve Water Level Sensor Metadata - Warning Level
3.5.2.1.20.4	Configure Water Level Metadata - Location		
		C.2.3.2.44	Configure Water Level Sensor Metadata - Location
3.5.2.1.20.5	Configure Water Level Metadata - Warning Level		
		C.2.3.2.45	Configure Water Level Sensor Metadata - Warning Level
3.5.2.1.21	Manage Pavement Treatment System Metadata		
3.5.2.1.21.1	Retrieve Pavement Treatment System Metadata - Location		
		C.2.3.2.46	Retrieve PTS Metadata - Location
3.5.2.1.21.2	Retrieve Pavement Treatment Metadata - System Information		
		C.2.3.2.47	Retrieve PTS Metadata - Sensor Information
3.5.2.1.21.3	Configure Pavement Treatment System Metadata - Location		
		C.2.3.2.48	Configure PTS Metadata - Location
3.5.2.2	Sensor Status Monitoring Requirements		
3.5.2.3	Sensor Data Retrieval Requirements		
3.5.2.3.1	Retrieve Weather Profile with Mobile Sources [Version 03 Only - Deprecated in v04]		
3.5.2.3.2	Monitor Weather Condition		
3.5.2.3.2.1	Retrieve Atmospheric Pressure [Versions 01 to 03 Only - Deprecated in v04]		
3.5.2.3.2.2	Retrieve Wind Data		
		C.2.3.3.3	Retrieve Wind Data
3.5.2.3.2.3	Retrieve Air Temperature		

© 2022 AASHTO / ITE / NEMA
Copy Per TRF Distribution Permission

Requirement		Test Case	
ID	**Title**	**ID**	**Title**
		C.2.3.3.4	Retrieve Temperature
3.5.2.3.2.4	Retrieve Daily Minimum and Maximum Temperature		
		C.2.3.3.5	Retrieve Daily Minimum and Maximum Temperature
3.5.2.3.2.5	Retrieve Humidity [Versions 01 to 03 Only - Deprecated in v04]		
3.5.2.3.2.6	Monitor Precipitation		
3.5.2.3.2.6.1	Retrieve Precipitation Presence [Versions 01 to 03 Only - Deprecated in v04]		
3.5.2.3.2.6.2	Retrieve Precipitation Rates [Versions 01 to 03 Only - Deprecated in v04]		
3.5.2.3.2.6.3	Retrieve Precipitation Totals [Versions 01 to 03 Only - Deprecated in v04]		
3.5.2.3.2.6.4	Retrieve Precipitation Presence		
		C.2.3.3.13	Retrieve Precipitation Presence
3.5.2.3.2.6.5	Retrieve Precipitation Rates		
		C.2.3.3.14	Retrieve Precipitation Rates
3.5.2.3.2.6.6	Retrieve Precipitation Totals		
		C.2.3.3.15	Retrieve Precipitation Totals
3.5.2.3.2.6.7	Retrieve Precipitation Totals - User Specified		
		C.2.3.3.16	Retrieve Precipitation Totals – User Specified
3.5.2.3.2.6.8	Retrieve Precipitation Type		
		C.2.3.3.13	Retrieve Precipitation Presence
3.5.2.3.2.7	Retrieve Solar Radiation [Versions 01 to 03 Only - Deprecated in v04]		
3.5.2.3.2.8	Retrieve Visibility		
		C.2.3.3.11	Retrieve Visibility
3.5.2.3.2.9	Retrieve Compressed Weather Data [Version 03 - Deprecated in v04] [Version 03]		
3.5.2.3.2.10	Retrieve Atmospheric Pressure		
		C.2.3.3.17	Retrieve Atmospheric Pressure
3.5.2.3.2.11	Retrieve Relative Humidity		
		C.2.3.3.18	Retrieve Relative Humidity Sensor
3.5.2.3.2.12	Retrieve Solar Radiation		
		C.2.3.3.19	Retrieve Solar Radiation
3.5.2.3.3	Monitor Pavement Condition		
3.5.2.3.3.1	Retrieve Pavement Surface Condition [Versions 01 to 03 - Deprecated in v04]		

© 2022 AASHTO / ITE / NEMA

Requirement		Test Case	
ID	Title	ID	Title
3.5.2.3.3.2	Retrieve Conditions for Freezing Algorithms - Active		
		C.2.3.4.2	Retrieve Icing Conditions—Active
3.5.2.3.3.3	Retrieve Conditions for Freezing Algorithms - Passive		
		C.2.3.4.3	Retrieve Icing Conditions—Passive
3.5.2.3.3.4	Retrieve Adjacent Snow Depth [Versions 01 to 03 - Deprecated in v04]		
3.5.2.3.3.5	Retrieve Roadway Snow Depth [Versions 01 to 03 - Deprecated in v04]		
3.5.2.3.3.6	Retrieve Roadway Ice Thickness [Versions 01 to 03 - Deprecated in v04]		
3.5.2.3.3.7	Retrieve Compressed Pavement Condition Data [Version 03 - Deprecated in v04]		
3.5.2.3.3.8	Retrieve Pavement Surface Condition		
		C.2.3.4.11	Retrieve Pavement Surface Condition
3.5.2.3.3.9	Retrieve Forecasted Pavement Surface Condition		
		C.2.3.4.12	Retrieve Forecasted Pavement Surface Condition
3.5.2.3.3.10	Retrieve Roadway Friction Coefficient		
		C.2.3.4.13	Retrieve Roadway Friction Coefficient
3.5.2.3.3.11	Retrieve Adjacent Snow Depth		
		C.2.3.4.14	Retrieve Adjacent Snow Depth
3.5.2.3.3.12	Retrieve Roadway Snow Depth		
		C.2.3.4.15	Retrieve Roadway Snow Depth
3.5.2.3.3.13	Retrieve Roadway Ice Thickness		
		C.2.3.4.16	Retrieve Roadway Ice Thickness
3.5.2.3.4	Monitor Subsurface Conditions		
3.5.2.3.4.1	Retrieve Subsurface Temperature		
		C.2.3.4.8	Retrieve Basic Subsurface Conditions
3.5.2.3.4.2	Retrieve Subsurface Moisture		
		C.2.3.4.9	Retrieve Subsurface Moisture
3.5.2.3.4.3	Retrieve Compressed Subsurface Condition Data [Version 03 - Deprecated in v04]		
3.5.2.3.5	Monitor Situation Assessments		
3.5.2.3.5.1	Retrieve Wind Situation		
		C.2.3.5.1	Retrieve Wind Situation
3.5.2.3.5.2	Retrieve Precipitation Situation		

© 2022 AASHTO / ITE / NEMA

Requirement		Test Case	
ID	**Title**	**ID**	**Title**
		C.2.3.5.2	Retrieve Precipitation Situation
3.5.2.3.5.3	Retrieve Cloud Situation [Versions 01 to 03 Only - Deprecated in v04]		
3.5.2.3.5.4	Retrieve Visibility Situation		
		C.2.3.5.4	Retrieve Visibility Situation
3.5.2.3.5.5	Retrieve Ground State [Versions 01 to 03 Only - Deprecated in v04]		
3.5.2.3.5.6	Retrieve Pavement State [Versions 01 to 03 Only - Deprecated in v04]		
3.5.2.3.5.7	Retrieve Cloud Situation		
		C.2.3.5.7	Retrieve Cloud Situation
3.5.2.3.5.8	Retrieve Ground State		
		C.2.3.5.8	Retrieve Ground State
3.5.2.3.5.9	Retrieve Pavement State		
		C.2.3.5.9	Retrieve Pavement State
3.5.2.3.6	Monitor Air Quality and Biohazard Conditions		
3.5.2.3.6.1	Retrieve Carbon Monoxide Reading		
		C.2.3.6.1	Retrieve Carbon Monoxide Reading
3.5.2.3.6.2	Retrieve Carbon Dioxide Reading [Versions 01 to 03 - Deprecated in v04]		
3.5.2.3.6.3	Retrieve Nitrous Oxide Reading [Versions 01 to 03 - Deprecated in v04]		
3.5.2.3.6.4	Retrieve Nitrogen Dioxide Reading		
		C.2.3.6.4	Retrieve Nitrogen Dioxide Reading
3.5.2.3.6.5	Retrieve Sulfur Dioxide Reading		
		C.2.3.6.5	Retrieve Sulfur Dioxide Reading
3.5.2.3.6.6	Retrieve Ozone Reading [Versions 01 to 03 - Deprecated in v04]		
3.5.2.3.6.7	Retrieve Small Particulate Matter Reading		
		C.2.3.6.7	Retrieve Small Particulate Matter Reading
3.5.2.3.6.8	Retrieve Compressed Air Quality Data [Version 03 - Deprecated in v04]		
3.5.2.3.6.9	Retrieve Particulate Matter (2.5) Reading		
		C.2.3.6.9	Retrieve Particulate Matter (2.5) Reading
3.5.2.3.6.10	Retrieve Carbon Dioxide Reading		

© 2022 AASHTO / ITE / NEMA

Requirement		Test Case	
ID	**Title**	**ID**	**Title**
		C.2.3.6.10	Retrieve Carbon Dioxide Reading - Version 4
3.5.2.3.6.11	Retrieve Nitric Oxide Reading		
		C.2.3.6.11	Retrieve Nitric Oxide Reading - Version 4
3.5.2.3.6.12	Retrieve Ozone Reading		
		C.2.3.6.12	Retrieve Ozone Reading - Version 4
3.5.2.3.7	Retrieve Water Level		
		C.2.3.7.1	Retrieve Water Level
3.5.2.3.8	Retrieve Snapshot		
		C.2.3.7.2	Retrieve Snapshot
3.5.2.3.9	Retrieve Snapshot Camera Configuration		
		C.2.3.7.2	Retrieve Snapshot
3.5.2.3.10	Retrieve Sensor Profile with Mobile Sources		
		C.2.3.12.1	Retrieve Sensor Profile with Mobile Sources
3.5.2.4	Sensor Control Requirements		
3.5.2.4.1	Capture Snapshot Image		
		C.2.3.7.2	Retrieve Snapshot
3.5.2.4.2	Delete Snapshot		
		C.2.3.7.2	Retrieve Snapshot
3.5.2.4.3	Copy Snapshot - [Obsolete]-[Deprecated]		
3.5.3	PTS Manager Requirements		
3.5.3.1	PTS Configuration Requirements		
3.5.3.1.1	Retrieve Stationary Pavement Treatment Configuration		
		C.2.3.8.1	Retrieve Stationary Pavement Treatment Configuration
3.5.3.1.2	Configure Stationary Pavement Treatment System		
		C.2.3.8.2	Configure Stationary Pavement Treatment System
3.5.3.1.3	Retrieve Mobile Pavement Treatment Configuration [Versions 01 to 03 Only - Deprecated in v04]		
3.5.3.1.4	Configure Mobile Pavement Treatment System		
		C.2.3.8.4	Configure Mobile Pavement Treatment System
3.5.3.1.5	Retrieve Mobile Pavement Treatment Configuration		
		C.2.3.8.9	Retrieve Mobile Pavement Treatment Configuration
3.5.3.2	PTS Status Monitoring Requirements		
3.5.3.2.1	Retrieve Pavement Treatment Status		

© 2022 AASHTO / ITE / NEMA

Requirement		Test Case	
ID	Title	ID	Title
		C.2.3.8.5	Retrieve Pavement Treatment Status
3.5.3.3	PTS Data Retrieval Requirements		
3.5.3.3.1	Retrieve Pavement Treatment Profile with Mobile Sources		
		C.2.3.8.8	Retrieve Pavement Treatment Profile with Mobile Sources
3.5.3.4	PTS Control Requirements		
3.5.3.4.1	Set PTS Operational Mode		
		C.2.3.8.6	Set PTS Operational Mode
3.5.3.4.2	Manually Activate PTS Sprayer		
		C.2.3.8.7	Manually Activate PTS Sprayer
3.5.4	Backward Compatibility Requirements		
3.5.4.1	NTCIP 1204 v01 Wind Sensor Meta Data		
		C.2.3.11.1	Version 1 Wind Sensor Meta Data
3.5.4.2	NTCIP 1204 v01 Average Wind Sensor Data		
		C.2.3.11.2	Version 1 Average Wind Sensor Data
3.5.4.3	NTCIP 1204 v01 Spot Wind Sensor Data		
		C.2.3.11.3	Version 1 Spot Wind Sensor Data
3.5.4.4	NTCIP 1204 v01 Wind Gust Data		
		C.2.3.11.4	Version 1 Wind Gust Data
3.5.4.5	NTCIP 1204 v01 Wind Situation		
		C.2.3.11.5	Version 1 Wind Situation
3.5.4.6	NTCIP 1204 v01 Water Depth		
		C.2.3.11.6	Version 1 Water Depth
3.5.4.7	NTCIP 1204 v01 Solar Radiation		
		C.2.3.11.7	Version 1 Solar Radiation
3.5.4.8	NTCIP 1204 v01 Surface Water Depth		
		C.2.3.11.8	Version 1 Surface Water Depth
3.5.4.9	NTCIP 1204 v01 Surface Conductivity		
		C.2.3.11.9	Version 1 Surface Conductivity
3.5.4.10	NTCIP 1204 v02 Station Meta Data Block		
		C.2.3.11.10	Version 2 Station Meta Data Block
3.5.4.11	NTCIP 1204 v02 Weather Block		
		C.2.3.11.11	Version 2 Weather Block
3.5.4.12	NTCIP 1204 v02 Pavement Block		
		C.2.3.11.12	Version 2 Pavement Block
3.5.4.13	NTCIP 1204 v03 Retrieve External Port Information		
		C.2.3.11.13	Version 3 Monitor External Port Information
3.5.4.14	NTCIP 1204 v03 Configure Port Information		
		C.2.3.11.13	Version 3 Monitor External Port Information

Copy Per TRF Distribution Permission
© 2022 AASHTO / ITE / NEMA

Requirement		Test Case	
ID	**Title**	**ID**	**Title**
3.5.4.15	NTCIP 1204 v03 Monitor Status of External Device		
		C.2.3.11.14	Version 3 Configure External Port
3.5.4.16	NTCIP 1204 v03 Control External Device		
		C.2.3.11.14	Version 3 Configure External Port
3.5.4.17	NTCIP 1204 v03 Station Metadata Block		
		C.2.3.1.2	Retrieve Compressed Station Metadata
3.5.4.18	NTCIP 1204 v03 Mobile ESS Data Block		
		C.2.3.1.7	Retrieve Compressed Mobile Station Data
3.5.4.19	NTCIP 1204 v01-v03 Atmospheric Pressure Height		
		C.2.3.2.1	Retrieve Atmospheric Pressure Height [Versions 01 to 03]
3.5.4.20	NTCIP 1204 v03 Weather Profile with Mobile Sources		
		C.2.3.3.1	Retrieve Weather Profile with Mobile Sources
3.5.4.21	NTCIP 1204 v01-v03 Atmospheric Pressure		
		C.2.3.3.2	Retrieve Atmospheric Pressure [Versions 01 to 03]
3.5.4.22	NTCIP 1204 v01-v03 Humidity		
		C.2.3.3.6	Retrieve Humidity [Versions 01 to 03]
3.5.4.23	NTCIP 1204 v01-v03 Precipitation Presence		
		C.2.3.3.7	Retrieve Precipitation Presence [Versions 01 to 03]
3.5.4.24	NTCIP 1204 v01-v03 Precipitation Rates		
		C.2.3.3.8	Retrieve Precipitation Rates [Versions 01 to 03]
3.5.4.25	NTCIP 1204 v01-v03 Precipitation Totals		
		C.2.3.3.9	Retrieve Precipitation Totals [Versions 01 to 03]
3.5.4.26	NTCIP 1204 v03 Solar Radiation		
		C.2.3.3.10	Retrieve Solar Radiation [Versions 01 to 03]
3.5.4.27	NTCIP 1204 v03 Weather Block		
		C.2.3.3.12	Retrieve Compressed Weather Data
3.5.4.28	NTCIP 1204 v01-v03 Pavement Surface Condition		
		C.2.3.4.1	Retrieve Pavement Surface Condition [Versions 01 to 03]
3.5.4.29	NTCIP 1204 v03 Pavement Condition Block		

© 2022 AASHTO / ITE / NEMA
Copy Per TRF Distribution Permission

Requirement		Test Case	
ID	Title	ID	Title
		C.2.3.4.7	Retrieve Compressed Pavement Condition Data
3.5.4.30	NTCIP 1204 v01-v03 Adjacent Snow Depth		
		C.2.3.4.4	Retrieve Adjacent Snow Depth [Versions 01 to 03]
3.5.4.31	NTCIP 1204 v01-v03 Roadway Snow Depth		
		C.2.3.4.5	Retrieve Roadway Snow Depth [Versions 01 to 03]
3.5.4.32	NTCIP 1204 v01-v03 Roadway Ice Thickness		
		C.2.3.4.6	Retrieve Roadway Ice Thickness [Versions 01 to 03]
3.5.4.33	NTCIP 1204 v03 Subsurface Condition Block		
		C.2.3.4.10	Retrieve Compressed Subsurface Condition Data
3.5.4.34	NTCIP 1204 v01-v03 Cloud Situation		
		C.2.3.5.3	Retrieve Cloud Situation [Versions 01 to 03]
3.5.4.35	NTCIP 1204 v01-v03 Ground State		
		C.2.3.5.5	Retrieve Ground State [Versions 01 to 03]
3.5.4.36	NTCIP 1204 v01-v03 Pavement State		
		C.2.3.5.6	Retrieve Pavement State [Versions 01 to 03]
3.5.4.37	NTCIP 1204 v03 Air Quality Block		
		C.2.3.6.8	Retrieve Compressed Air Quality Data
3.5.4.38	NTCIP 1204 v03 Mobile Pavement Treatment Block		
		C.2.3.8.3	Retrieve Mobile Pavement Treatment Configuration
3.5.4.39	NTCIP 1204 v01-03 Carbon Dioxide Reading		
		C.2.3.6.2	Retrieve Carbon Dioxide Reading [Versions 01 to 03]
3.5.4.40	NTCIP 1204 v01-03 Nitric Oxide Reading		
		C.2.3.6.3	Retrieve Nitric Oxide Reading [Versions 01 to 03]
3.5.4.41	NTCIP 1204 v01-03 Ozone Reading		
		C.2.3.6.6	Retrieve Ozone Reading [Versions 01 to 03]
3.6	Supplemental Non-Communications Requirements		
3.6.1	Required Number of Atmospheric Pressure Sensors		
		C.2.3.3.17	Retrieve Atmospheric Pressure
3.6.2	Required Number of Wind Sensors		
		C.2.3.3.3	Retrieve Wind Data

© 2022 AASHTO / ITE / NEMA

Requirement		Test Case	
ID	**Title**	**ID**	**Title**
3.6.3	Required Number of Temperature Sensors		
		C.2.3.3.4	Retrieve Temperature
3.6.4	Required Number of Humidity Sensors		
		C.2.3.3.18	Retrieve Relative Humidity Sensor
3.6.5	Required Number of Precipitation Sensors		
		C.2.3.3.13	Retrieve Precipitation Presence
3.6.6	Required Number of Solar Radiation Sensors		
		C.2.3.3.19	Retrieve Solar Radiation
3.6.7	Required Number of Visibility Sensors		
		C.2.3.3.11	Retrieve Visibility
3.6.8	Required Number of Pavement Sensors		
		C.2.3.4.11	Retrieve Pavement Surface Condition
3.6.9	Active Pavement Treatment Sensors		
		C.2.3.4.2	Retrieve Icing Conditions—Active
3.6.10	Passive Pavement Treatment Sensors		
		C.2.3.4.3	Retrieve Icing Conditions—Passive
3.6.11	Required Number of Subsurface Sensors		
		C.2.3.4.8	Retrieve Basic Subsurface Conditions
3.6.12	Required Number of Pavement Treatment Products		
		C.2.3.8.1	Retrieve Stationary Pavement Treatment Configuration
		C.2.3.8.3	Retrieve Mobile Pavement Treatment Configuration
3.6.13	Required Number of Carbon Monoxide Sensors		
		C.2.3.6.1	Retrieve Carbon Monoxide Reading
3.6.14	Required Number of Carbon Dioxide Sensors		
		C.2.3.6.2	Retrieve Carbon Dioxide Reading [Versions 01 to 03]
3.6.15	Required Number of Nitric Oxide Sensors		
		C.2.3.6.3	Retrieve Nitric Oxide Reading [Versions 01 to 03]
3.6.16	Required Number of Nitrogen Dioxide Sensors		
		C.2.3.6.4	Retrieve Nitrogen Dioxide Reading
3.6.17	Required Number of Sulfur Dioxide Sensors		
		C.2.3.6.5	Retrieve Sulfur Dioxide Reading
3.6.18	Required Number of Ozone Sensors		
		C.2.3.6.6	Retrieve Ozone Reading [Versions 01 to 03]

© 2022 AASHTO / ITE / NEMA

Requirement		Test Case	
ID	Title	ID	Title
3.6.19	Required Number of Small Particulate Matter Sensors		
		C.2.3.6.7	Retrieve Small Particulate Matter Reading
3.6.20	Required Number of Snapshot Cameras		
		C.2.3.7.2	Retrieve Snapshot
3.6.21	Maximum Response Time for Requests		
		C.2.3	Test Procedures
3.6.22	Required Number of Water Level Sensors		
		C.2.3.7.1	Retrieve Water Level
3.6.23	Support Camera Number in Filename		
		C.2.3.2.9	Configure Snapshot Camera
3.6.24	Support Sequence Number in Filename		
		C.2.3.2.9	Configure Snapshot Camera
3.6.25	Support Date in Filename		
		C.2.3.2.9	Configure Snapshot Camera
3.6.26	Support Time in Filename		
		C.2.3.2.9	Configure Snapshot Camera
3.6.27	Support Long Filenames		
		C.2.3.2.9	Configure Snapshot Camera
3.6.28	Required Number of Small Particulate Matter (2.5) Sensors		
		C.2.3.6.9	Retrieve Particulate Matter (2.5) Reading
F.2.1	Generic Architectural Requirements		
F.2.1.1	Support Basic Communications		
F.2.1.1.1	Retrieve Data		
		C.2.3.1.1	ESS Characteristics
F.2.1.1.2	Deliver Data		
		C.2.3.1.1	ESS Characteristics
F.2.1.1.3	Explore Data		
		C.2.3.10.1	Explore Data
F.2.1.2	Support Logged Data		
F.2.1.2.1	Retrieve Current Configuration of Logging Service		
		C.2.3.9.13	Determine Configuration of Logging Service
F.2.1.2.2	Configure Logging Service		
		C.2.3.9.2	Configure Event Log
		C.2.3.9.7	Verify Support for an On-Change Event
		C.2.3.9.8	Verify Support for a Greater Than Event
		C.2.3.9.9	Verify Support for a Less Than Event
		C.2.3.9.10	Verify Support for a Hysteresis Event
		C.2.3.9.11	Verify Support for a Periodic Event

Copy Per TRF Distribution Permission
© 2022 AASHTO / ITE / NEMA

Requirement		Test Case	
ID	**Title**	**ID**	**Title**
		C.2.3.9.12	Verify Support for a Bit-flag Event
F.2.1.2.3	Retrieve Logged Data		
		C.2.3.9.3	Retrieve Logged Data
F.2.1.2.4	Clear Log		
		C.2.3.9.4	Clear Log
F.2.1.2.5	Retrieve Capabilities of Event Logging Service		
		C.2.3.9.1	Determine Capabilities of Event Logging Service
F.2.1.2.6	Retrieve Total Number of Logged Events		
		C.2.3.9.5	Determine Total Number of Events
F.2.1.3	Manage Exception Reporting Requirements		No Test Cases Developed
F.2.2	Generic Functional Requirements		
F.2.2.1	Generic Configuration Requirements		
F.2.2.1.1	Retrieve Device Component Information		
		C.2.3.10.2	Determine Device Component Information
F.2.2.1.2	Retrieve Device Configuration Identifier		
		C.2.3.10.3	Retrieve Device Configuration Identifier
F.2.2.1.3	Retrieve Supported Standards		
		C.2.3.10.4	Determine Supported Standards
F.2.2.1.4	Retrieve System Name		
		C.2.3.10.5	Retrieve System Name
F.2.2.1.5	Manage Time		
F.2.2.1.5.1	Set Time		
		C.2.3.10.6	Set Time
F.2.2.1.5.2	Retrieve Current Time		
		C.2.3.10.6	Set Time
F.2.2.1.6	Retrieve External Port Information		
		C.2.3.10.7	Monitor External Port Information
F.2.2.1.7	Configure Port Information		
		C.2.3.10.8	Configure External Port
F.2.2.2	Generic Status Monitoring Requirements		
F.2.2.2.1	Monitor Status of External Device		
		C.2.3.10.7	Monitor External Port Information
F.2.2.3	Generic Data Retrieval Requirements		
F.2.2.4	Generic Control Requirements		
F.2.2.4.1	Control External Device		
		C.2.3.10.8	Configure External Port
F.2.3	Generic Supplemental Requirements		
F.2.3.1	Supplemental Requirements for Event Monitoring		
F.2.3.1.1	Record and Timestamp Events		
		C.2.3.9.3	Retrieve Logged Data
		C.2.3.9.6	Verify Log Limit Storage

© 2022 AASHTO / ITE / NEMA

Requirement		Test Case	
ID	**Title**	**ID**	**Title**
F.2.3.1.2	Support a Number of Event Classes		
		C.2.3.9.1	Determine Capabilities of Event Logging Service
F.2.3.1.3	Support a Number of Event Types to Monitor		
		C.2.3.9.1	Determine Capabilities of Event Logging Service
F.2.3.1.4	Support Monitoring of Event Types		
F.2.3.1.4.1	Support On-Change Events		
		C.2.3.9.7	Verify Support for an On-Change Event
F.2.3.1.4.2	Support Greater Than Events		
		C.2.3.9.8	Verify Support for a Greater Than Event
F.2.3.1.4.3	Support Less Than Events		
		C.2.3.9.9	Verify Support for a Less Than Event
F.2.3.1.4.4	Support Hysteresis Events		
		C.2.3.9.10	Verify Support for a Hysteresis Event
F.2.3.1.4.5	Support Periodic Events		
		C.2.3.9.11	Verify Support for a Periodic Event
F.2.3.1.4.6	Support Bit Flag Events		
		C.2.3.9.12	Verify Support for a Bit-flag Event
F.2.3.1.5	Support Event Monitoring on Any Data		
		C.2.3.9.2	Configure Event Log
F.2.3.1.6	Support a Number of Events to Store in Log		
		C.2.3.9.1	Determine Capabilities of Event Logging Service
		C.2.3.9.6	Verify Log Limit Storage
F.2.3.2	Required Number of Auxiliary Ports		
		C.2.3.10.7	Monitor External Port Information

C.2.3 Test Procedures

Annex C.2.3 provides detailed test procedures.

Each field in each Test Case is defined in NTCIP 8007 v01 Section 2.4.2. In addition to these definitions, the Variables field may contain a reference, in parentheses, that indicates where the value to be used for a test case for a Variable may be found. In certain instances, that value may be found in the Additional Specifications column (for the appropriate User Need ID or FR ID) in the PRL in Section 3.3.3. Finally, the Device field may contain a reference, in parentheses, where the requirement, dialog, or object definition that is being tested for that Test Step can be found.

C.2.3.1 ESS Manager Tests

C.2.3.1.1 ESS Characteristics

Test Case: 1.1	***Title:***	*ESS Characteristics*
	Description:	*This test case verifies that the ESS accurately reports its type, category and location and allows a management station to edit the site description.*

© 2022 AASHTO / ITE / NEMA

	Variables:	
	Pass/Fail Criteria:	*The device under test (DUT) shall pass every verification step included within the Test Case to pass the Test Case.*

Step	***Test Procedure***	***Device***
1	GET the following object(s): »essNtcipCategory.0 »essNtcipSiteDescription.0 »essTypeofStation.0 »essLatitude.0 »essLongitude.0 »essReferenceHeight.0	Pass / Fail (Sec. 3.5.1.1.1)
2	VERIFY that the RESPONSE VALUE for essNtcipCategory.0 is APPROPRIATE. Note: See NTCIP 1204 v04 Sec. 5.2.1 for valid enumerated values.	Pass / Fail (Sec. 5.2.1)
3	VERIFY that the RESPONSE VALUE for essNtcipSiteDescription.0 contains only display string characters.	Pass / Fail (Sec. 5.2.2)
4	VERIFY that the RESPONSE VALUE for essTypeofStation.0 is APPROPRIATE. Note: See NTCIP 1204 v04 Sec. 5.3.1 for the definition of valid values.	Pass / Fail (Sec. 5.3.1)
5	VERIFY that the RESPONSE VALUE for essLatitude.0 is APPROPRIATE.	Pass / Fail (Sec. 5.4.1)
6	VERIFY that the RESPONSE VALUE for essLongitude.0 is APPROPRIATE.	Pass / Fail (Sec. 5.4.2)
7	VERIFY that the RESPONSE VALUE for essReferenceHeight.0 is APPROPRIATE.	Pass / Fail (Sec. 5.5.1)
8	Determine the RESPONSE VALUE for essNtcipSiteDescription.0. RECORD this information as: »Orig_Description	
9	Calculate a random test value for the site description containing between 1 and 255 DisplayString characters. RECORD this information as: »New_Description	
10	SET the following object(s) to the value(s) shown: »essNtcipSiteDescription.0 = New_Description	Pass / Fail (Sec. 3.5.1.1.3)
11	GET the following object(s): »essNtcipCategory.0 »essNtcipSiteDescription.0 »essTypeofStation.0 »essLatitude.0 »essLongitude.0 »essReferenceHeight.0	Pass / Fail (Sec. 3.5.1.1.1)
12	VERIFY that the RESPONSE VALUE for essNtcipSiteDescription.0 is equal to New_Description.	Pass / Fail (Sec. 3.5.1.1.3)
13	SET the following object(s) to the value(s) shown: »essNtcipSiteDescription.0 = Orig_Description	Pass / Fail (Sec. 3.5.1.1.3)
14	GET the following object(s): »essNtcipSiteDescription.0	Pass / Fail (RFC 1157)

© 2022 AASHTO / ITE / NEMA

15	VERIFY that the RESPONSE VALUE for essNtcipSiteDescription.0 is equal to Orig_Description.	Pass / Fail (Sec. 3.5.1.1.3)

Test Case Results		
Tested By:	***Date Tested:***	***Pass / Fail***
Test Case Notes:		

© 2022 AASHTO / ITE / NEMA

C.2.3.1.2 Retrieve Compressed Station Metadata

Test Case: 1.2	***Title:***	*Retrieve Compressed Station Metadata*
	Description:	*This test case verifies that the ESS accurately reports its type, category, location, sensor locations, and pavement treatment information in a compressed form.*
	Variables:	*Pressure_Supported* — *PRL 2.5.2.1.1* *Wind_Supported* — *PRL 2.5.2.1.2* *Required_Wind_Sensors* — *PRL 3.6.2* *Temperature_Supported* — *PRL 2.5.2.1.3* *Required_Temp_Sensors* — *PRL 3.6.3* *Pavement_Supported* — *PRL 2.5.2.2* *Required_Pavement_Sensors* — *PRL 3.6.8* *Subsurface_Supported* — *PRL 2.5.2.3* *Required_Subsurface_Sensors* — *PRL 3.6.11* *Pavement_Treatment_Supported* — *PRL 2.5.3* *Required_Pavement_Treatment_Products* — *PRL 3.6.12*
	Pass/Fail Criteria:	*The device under test (DUT) shall pass every verification step included within the Test Case to pass the Test Case.*

Step	***Test Procedure***	***Device***
1	CONFIGURE: Determine whether the ESS is required to monitor atmospheric pressure (PRL 2.5.2.1.1). RECORD this information as: »Pressure_Supported	
2	CONFIGURE: Determine the number of wind sensors that are supported. RECORD this information as: »Wind_Supported (whether the ESS is required to monitor winds—PRL 2.5.2.1.2) »Required_Wind_Sensors (the number of temperature sensors that the ESS is required to support—PRL 3.6.2)	
3	CONFIGURE: Determine whether the ESS is required to support temperature sensors and, if so, how many sensors are required. RECORD this information as: »Temperature_Supported (whether the ESS is required to monitor temperature—PRL 2.5.2.1.3) »Required_Temp_Sensors (the number of temperature sensors that the ESS is required to support—PRL 3.6.3)	
4	CONFIGURE: Determine whether the ESS is required to support pavement sensors and, if so, how many sensors are required. RECORD this information as: »Pavement_Supported (whether the ESS is required to monitor the pavement—PRL 2.5.2.2) »Required_Pavement_Sensors (the number of pavement sensors that the ESS is required to support—PRL 3.6.8)	
5	CONFIGURE: Determine whether the ESS is required to support subsurface sensors and, if so, how many sensors are required. RECORD this information as: »Subsurface_Supported (whether the ESS is required to monitor the subsurface - PRL 2.5.2.3) »Required_Subsurface_Sensors (the number of subsurface sensors that the ESS is required to support—PRL 3.6.11)	
6	CONFIGURE: Determine whether the ESS is required to provide pavement treatment capabilities and, if so, how many treatment products the device is required to support. RECORD this information as: »Pavement_Treatment_Supported (whether pavement treatment capabilities are required—PRL 2.5.3)	

© 2022 AASHTO / ITE / NEMA Copy Per TRF Distribution Permission

	»Required_Pavement_Treatment_Products (number of pavement treatment products required—PRL 3.6.12)	
7	GET the following object(s): »essStationMetaDataV3Block.0	Pass / Fail (Sec. 3.5.1.1.2)
8	Decode the essStationMetaDataV3Block.0 structure.	
9	VERIFY that the essStationMetaDataV3Block.0 structure was decoded without error.	Pass / Fail (Sec. 5.3.8)
10	VERIFY that the RESPONSE VALUE for the essNtcipCategory.0 field of the essStationMetaDataV3Block.0 object is present.	Pass / Fail (Sec. 3.5.1.1.1)
11	VERIFY that the RESPONSE VALUE for the essNtcipCategory.0 field of the essStationMetaDataV3Block.0 object is APPROPRIATE. NOTE—See NTCIP 1204 v04 Sec. 5.2.1 for valid enumerated values.	Pass / Fail (Sec. 5.2.1)
12	VERIFY that the RESPONSE VALUE for the essTypeOfStation.0 field of the essStationMetaDataV3Block.0 object is present.	Pass / Fail (Sec. 3.5.1.1.1)
13	VERIFY that the RESPONSE VALUE for the essTypeOfStation.0 field of the essStationMetaDataV3Block.0 object is APPROPRIATE. Note: See NTCIP 1204 v04 Sec. 5.3.1 for the definition of valid values.	Pass / Fail (Sec. 5.3.1)
14	VERIFY that the RESPONSE VALUE for the essLatitude.0 field of the essStationMetaDataV3Block.0 object is present.	Pass / Fail (Sec. 3.5.1.1.1)
15	VERIFY that the RESPONSE VALUE for the essLatitude.0 field of the essStationMetaDataV3Block.0 object indicates an APPROPRIATE.	Pass / Fail (Sec. 5.4.1)
16	VERIFY that the RESPONSE VALUE for the essLongitude.0 field of the essStationMetaDataV3Block.0 object is present.	Pass / Fail (Sec. 3.5.1.1.1)
17	VERIFY that the RESPONSE VALUE for the essLongitude.0 field of the essStationMetaDataV3Block.0 object indicates an APPROPRIATE.	Pass / Fail (Sec. 5.4.2)
18	VERIFY that the RESPONSE VALUE for the essReferenceHeight.0 field of the essStationMetaDataV3Block.0 object is present.	Pass / Fail (Sec. 3.5.1.1.1)
19	VERIFY that the RESPONSE VALUE for the essReferenceHeight.0 field of the essStationMetaDataV3Block.0 object is APPROPRIATE.	Pass / Fail (Sec. 5.5.1)
20	IF Pressure_Supported is equal to true, then proceed to Step 20.1; otherwise, proceed to Step 21.	
20.1	VERIFY that the RESPONSE VALUE for the essPressureHeight.0 field of the essStationMetaDataV3Block.0 object is present.	Pass / Fail (Sec. 3.5.2.1.1)
20.2	VERIFY that the RESPONSE VALUE for essPressureHeight.0 is APPROPRIATE.	Pass / Fail (Sec. 5.5.2)
21	IF Wind_Supported is equal to true, then proceed to Step 21.1; otherwise, proceed to Step 22.	
21.1	VERIFY that the windMetaData field of the essStationMetaDataV3Block.0 object is present.	Pass / Fail (Sec. 3.5.2.1.2)
21.2	VERIFY that the windMetaData field of the essStationMetaDataV3Block.0 object contains at least Required_Wind_Sensors entries.	Pass / Fail (Sec. 3.6.2)

© 2022 AASHTO / ITE / NEMA

21.3	FOR EACH value, N, from 1 to Required_Temp_Sensors, perform Steps 21.3.1 through 21.3.4.	
21.3.1	VERIFY that the RESPONSE VALUE for the windSensorIndex.0 field is present in the Nth WindMetaData structure.	Pass / Fail (Sec. 3.5.2.1.2)
21.3.2	VERIFY that the RESPONSE VALUE for the windSensorIndex.x field in the Nth WindMetaData structure is equal to N.	Pass / Fail (Sec. 5.6.10.1)
21.3.3	VERIFY that the RESPONSE VALUE for the windSensorHeight.x field is present in the Nth WindMetaData structure.	Pass / Fail (Sec. 3.5.2.1.2)
21.3.4	VERIFY that the RESPONSE VALUE for windSensorHeight.x field in the Nth WindMetaData structure is APPROPRIATE.	Pass / Fail (Sec. 5.6.10.2)
22	IF Temperature_Supported is equal to true, then proceed to Step 22.1; otherwise, proceed to Step 23.	
22.1	VERIFY that the RESPONSE VALUE for the temperatureMetaData field of the essStationMetaDataV3Block.0 object is present.	Pass / Fail (Sec. 3.5.2.1.3)
22.2	VERIFY that the temperatureMetaData field contains at least Required_Temp_Sensors entries.	Pass / Fail (Sec. 3.6.3)
22.3	FOR EACH value, N, from 1 to Required_Temp_Sensors, perform Steps 22.3.1 through 22.3.4.	
22.3.1	VERIFY that the RESPONSE VALUE for the essTemperatureSensorIndex.0 field is present in the Nth TemperatureMetaData structure.	Pass / Fail (Sec. 3.5.2.1.3)
22.3.2	VERIFY that the RESPONSE VALUE for the essTemperatureSensorIndex.0 field in the Nth TemperatureMetaData structure is equal to N.	Pass / Fail (Sec. 5.7.3.1)
22.3.3	VERIFY that the RESPONSE VALUE for the essTemperatureSensorHeight.0 field is present in the Nth TemperatureMetaData structure.	Pass / Fail (Sec. 3.5.2.1.3)
22.3.4	VERIFY that the RESPONSE VALUE for essTemperatureSensorHeight.0 field in the Nth TemperatureMetaData structure is APPROPRIATE.	Pass / Fail (Sec. 5.7.3.2)
23	IF Pavement_Supported is equal to true, then proceed to Step 23.1; otherwise, proceed to Step 24.	
23.1	VERIFY that the RESPONSE VALUE for the pavementMetaData field of the essStationMetaDataV3Block.0 object is present.	Pass / Fail (Sec. 3.5.2.1.4)
23.2	VERIFY that the pavementMetaData field contains at least Required_Pavement_Sensors entries.	Pass / Fail (Sec. 3.6.8)
23.3	FOR EACH value, N, from 1 to Required_Pavement_Sensors, perform Steps 23.3.1 through 23.3.10.	
23.3.1	VERIFY that the RESPONSE VALUE for the essPavementSensorIndex.0 field is present in the Nth PavementMetaData structure.	Pass / Fail (Sec. 3.5.2.1.4)
23.3.2	VERIFY that the RESPONSE VALUE for the essPavementSensorIndex.0 field in the Nth PavementMetaData structure is equal to N.	Pass / Fail (Sec. 5.11.3.1)
23.3.3	VERIFY that the RESPONSE VALUE for the essPavementType.0 field is present in the Nth PavementMetaData structure.	Pass / Fail (Sec. 3.5.2.1.4)
23.3.4	VERIFY that the RESPONSE VALUE for the essPavementType.0 field in the Nth PavementMetaData structure is APPROPRIATE.	Pass / Fail (Sec. 5.11.3.3)

© 2022 AASHTO / ITE / NEMA Copy Per TRF Distribution Permission

23.3.5	VERIFY that the RESPONSE VALUE for the essPavementElevation.0 field is present in the Nth PavementMetaData structure.	Pass / Fail (Sec. 3.5.2.1.4)
23.3.6	VERIFY that the RESPONSE VALUE for the essPavementElevation.0 field in the Nth PavementMetaData structure is APPROPRIATE.	Pass / Fail (Sec. 5.11.3.4)
23.3.7	VERIFY that the RESPONSE VALUE for the essPavementExposure.0 field is present in the Nth PavementMetaData structure.	Pass / Fail (Sec. 3.5.2.1.4)
23.3.8	VERIFY that the RESPONSE VALUE for the essPavementExposure.0 field in the Nth PavementMetaData structure is APPROPRIATE.	Pass / Fail (Sec. 5.11.3.5)
23.3.9	VERIFY that the RESPONSE VALUE for the essPavementSensorType.0 field is present in the Nth PavementMetaData structure.	Pass / Fail (Sec. 3.5.2.1.4)
23.3.10	VERIFY that the RESPONSE VALUE for the essPavementSensorType.0 field in the Nth PavementMetaData structure is APPROPRIATE.	Pass / Fail (Sec. 5.11.3.6)
24	IF Subsurface_Supported is equal to true, then proceed to Step 24.1; otherwise, proceed to Step 25.	
24.1	VERIFY that the RESPONSE VALUE for the SubSurfaceMetaData field of the essStationMetaDataV3Block.0 object is present.	Pass / Fail (Sec. 3.5.2.1.5)
24.2	VERIFY that the SubSurfaceMetaData field contains at least Required_Subsurface_Sensors entries.	Pass / Fail (Sec. 3.6.11)
24.3	FOR EACH value, N, from 1 to Required_Subsurface_Sensors, perform Steps 24.3.1 through 24.3.6.	
24.3.1	VERIFY that the RESPONSE VALUE for the essSubSurfaceSensorIndex.0 field is present in the Nth SubSurfaceMetaData structure.	Pass / Fail (Sec. 3.5.2.1.5)
24.3.2	VERIFY that the RESPONSE VALUE for the essSubSurfaceSensorIndex.0 field in the Nth SubSurfaceMetaData structure is equal to N.	Pass / Fail (Sec. 5.11.6.1)
24.3.3	VERIFY that the RESPONSE VALUE for the essSubSurfaceType.0 field is present in the Nth SubSurfaceMetaData structure.	Pass / Fail (Sec. 3.5.2.1.5)
24.3.4	VERIFY that the RESPONSE VALUE for the essSubSurfaceType.0 field in the Nth SubSurfaceMetaData structure is APPROPRIATE.	Pass / Fail (Sec. 5.11.6.3)
24.3.5	VERIFY that the RESPONSE VALUE for the essSubSurfaceSensorDepth.0 field is present in the Nth SubSurfaceMetaData structure.	Pass / Fail (Sec. 3.5.2.1.5)
24.3.6	VERIFY that the RESPONSE VALUE for the essSubSurfaceSensorDepth.0 field in the Nth SubSurfaceMetaData structure is APPROPRIATE.	Pass / Fail (Sec. 5.11.6.4)
25	IF Pavement_Treatment_Supported is equal to true, then proceed to Step 25.1; otherwise, proceed to EXIT.	
25.1	VERIFY that the RESPONSE VALUE for the treatmentMetaData field of the essStationMetaDataV3Block.0 object is present.	Pass / Fail (Sec. 3.5.2.1.8)
25.2	VERIFY that the treatmentMetaData field contains at least Required_Pavement_Treatment_Products entries.	Pass / Fail (Sec. 3.6.12)
25.3	FOR EACH value, N, from 1 to Required_Pavement_Treatment_Products, perform Steps 25.3.1 through 25.3.11.	
25.3.1	VERIFY that the RESPONSE VALUE for the essPavementTreatmentIndex.0 field is present in the Nth TreatmentMetaData structure.	Pass / Fail (Sec. 3.5.2.1.8)

© 2022 AASHTO / ITE / NEMA

25.3.2	VERIFY that the RESPONSE VALUE for the essPavementTreatmentIndex.0 field in the Nth TreatmentMetaData structure is equal to N.	Pass / Fail (Sec. 5.13.3.1)
25.3.3	VERIFY that the RESPONSE VALUE for the essPaveTreatProductType.0 field is present in the Nth TreatmentMetaData structure.	Pass / Fail (Sec. 3.5.2.1.8)
25.3.4	VERIFY that the RESPONSE VALUE for the essPaveTreatProductType.0 field in the Nth TreatmentMetaData structure is between 1 and 14, inclusive.	Pass / Fail (Sec. 5.13.3.2)
25.3.5	VERIFY that the RESPONSE VALUE for the essPaveTreatProductType.x field in the Nth TreatmentMetaData structure is APPROPRIATE.	Pass / Fail (Sec. 5.13.3.2)
25.3.6	VERIFY that the RESPONSE VALUE for the essPaveTreatProductForm.0 field is present in the Nth TreatmentMetaData structure.	Pass / Fail (Sec. 3.5.2.1.8)
25.3.7	VERIFY that the RESPONSE VALUE for the essPaveTreatProductForm.0 field in the Nth TreatmentMetaData structure is between 1 and 4, inclusive.	Pass / Fail (Sec. 5.13.3.3)
25.3.8	VERIFY that the RESPONSE VALUE for the essPaveTreatProductForm.0 field in the Nth TreatmentMetaData structure is APPROPRIATE.	Pass / Fail (Sec. 5.13.3.3)
25.3.9	VERIFY that the RESPONSE VALUE for the essPercentProductMix.0 field is present in the Nth TreatmentMetaData structure.	Pass / Fail (Sec. 3.5.2.1.8)
25.3.10	VERIFY that the RESPONSE VALUE for the essPercentProductMix.0 field in the Nth TreatmentMetaData structure is between 0 and 100, inclusive.	Pass / Fail (Sec. 5.13.3.4)
25.3.11	VERIFY that the RESPONSE VALUE for the essPercentProductMix.0 field in the Nth TreatmentMetaData structure is APPROPRIATE for the subject pavement treatment.	Pass / Fail (Sec. 5.13.3.4)

Test Case Results		
Tested By:	***Date Tested:***	***Pass / Fail***
Test Case Notes:		

© 2022 AASHTO / ITE / NEMA

C.2.3.1.3 Retrieve ESS Door Status

Test Case: 1.3	***Title:***	*Retrieve ESS Door Status*
	Description:	*This test case verifies that the ESS allows a management station to determine whether any of the doors related to the ESS are open.*
	Variables:	
	Pass/Fail Criteria:	*The device under test (DUT) shall pass every verification step included within the Test Case to pass the Test Case.*

Step	***Test Procedure***	***Device***
1	Verify that all doors associated with the ESS are closed.	
2	GET the following object(s): »essDoorStatus.0	Pass / Fail (Sec. 3.5.1.2.1)
3	VERIFY that the RESPONSE VALUE for essDoorStatus.0 is equal to 0.	Pass / Fail (Sec. 5.3.2)
4	Open at least one door associated with the ESS	
5	GET the following object(s): »essDoorStatus.0	Pass / Fail (Sec. 3.5.1.2.1)
6	VERIFY that the RESPONSE VALUE for essDoorStatus.0 is equal to 1.	Pass / Fail (Sec. 5.3.2)
7	Return all doors to their original state.	

Test Case Results		
Tested By:	***Date Tested:***	***Pass / Fail***
Test Case Notes:		

© 2022 AASHTO / ITE / NEMA

C.2.3.1.4 Retrieve Battery Status

Test Case: 1.4	***Title:***	*Retrieve Battery Status*
	Description:	*This test case verifies that the ESS allows a management station to determine the charge status of the battery.*
	Variables:	
	Pass/Fail Criteria:	*The device under test (DUT) shall pass every verification step included within the Test Case to pass the Test Case.*

Step	***Test Procedure***	***Device***
1	GET the following object(s): »essBatteryStatus.0	Pass / Fail (Sec. 3.5.1.2.2)
2	VERIFY that the RESPONSE VALUE for essBatteryStatus.0 is greater than or equal to 0.	Pass / Fail (Sec. 5.3.3)
3	VERIFY that the RESPONSE VALUE for essBatteryStatus.0 is less than or equal to 101.	Pass / Fail (Sec. 5.3.3)
4	VERIFY that the RESPONSE VALUE for essBatteryStatus.0 is APPROPRIATE.	Pass / Fail (Sec. 5.3.3)

Test Case Results

Tested By:	***Date Tested:***	***Pass / Fail***

Test Case Notes:

© 2022 AASHTO / ITE / NEMA

C.2.3.1.5 Retrieve Line Volts

Test Case: 1.5	***Title:***	*Retrieve Line Volts*
	Description:	*This test case verifies that the ESS allows a management station to determine the voltage on the incoming A/C power.*
	Variables:	
	Pass/Fail Criteria:	*The device under test (DUT) shall pass every verification step included within the Test Case to pass the Test Case.*

Step	***Test Procedure***	***Device***
1	GET the following object(s): »essLineVolts.0	Pass / Fail (Sec. 3.5.1.2.3)
2	VERIFY that the RESPONSE VALUE for essLineVolts.0 is greater than or equal to 0.	Pass / Fail (Sec. 5.3.4)
3	VERIFY that the RESPONSE VALUE for essLineVolts.0 is less than or equal to 255.	Pass / Fail (Sec. 5.3.4)
4	VERIFY that the RESPONSE VALUE for essLineVolts.0 is APPROPRIATE.	Pass / Fail (Sec. 5.3.4)

Test Case Results		
Tested By:	***Date Tested:***	***Pass / Fail***
Test Case Notes:		

© 2022 AASHTO / ITE / NEMA

C.2.3.1.6 Retrieve Mobile ESS Movement

Test Case: 1.6	***Title:***	*Retrieve Mobile ESS Movement*
	Description:	*This test case verifies that the ESS allows a management station to determine the speed, location and direction of the management station*
	Variables:	
	Pass/Fail Criteria:	*The device under test (DUT) shall pass every verification step included within the Test Case to pass the Test Case.*

Step	***Test Procedure***	***Device***
1	GET the following object(s): »essLatitude.0 »essLongitude.0 »essVehicleSpeed.0 »essVehicleBearing.0 »essOdometer.0 »essReferenceHeight.0	Pass / Fail (Sec. 3.5.1.3.1)
2	VERIFY that the RESPONSE VALUE for essLatitude.0 is greater than or equal to -90000000.	Pass / Fail (Sec. 5.4.1)
3	VERIFY that the RESPONSE VALUE for essLatitude.0 is less than or equal to 90000001.	Pass / Fail (Sec. 5.4.1)
4	VERIFY that the RESPONSE VALUE for essLatitude.0 is APPROPRIATE.	Pass / Fail (Sec. 5.4.1)
5	VERIFY that the RESPONSE VALUE for essLongitude.0 is greater than or equal to -180000000.	Pass / Fail (Sec. 5.4.2)
6	VERIFY that the RESPONSE VALUE for essLongitude.0 is less than or equal to 180000001.	Pass / Fail (Sec. 5.4.2)
7	VERIFY that the RESPONSE VALUE for essLongitude.0 is APPROPRIATE.	Pass / Fail (Sec. 5.4.2)
8	VERIFY that the RESPONSE VALUE for essVehicleSpeed.0 is greater than or equal to 0.	Pass / Fail (Sec. 5.4.3)
9	VERIFY that the RESPONSE VALUE for essVehicleSpeed.0 is less than or equal to 255.	Pass / Fail (Sec. 5.4.3)
10	VERIFY that the RESPONSE VALUE for essVehicleSpeed.0 is APPROPRIATE.	Pass / Fail (Sec. 5.4.3)
11	VERIFY that the RESPONSE VALUE for essVehicleBearing.0 is greater than or equal to 0.	Pass / Fail (Sec. 5.4.4)
12	VERIFY that the RESPONSE VALUE for essVehicleBearing.0 is less than or equal to 361.	Pass / Fail (Sec. 5.4.4)
13	VERIFY that the RESPONSE VALUE for essVehicleBearing.0 is APPROPRIATE.	Pass / Fail (Sec. 5.4.4)
14	VERIFY that the RESPONSE VALUE for essOdometer.0 is greater than or equal to 0.	Pass / Fail (Sec. 5.4.5)
15	VERIFY that the RESPONSE VALUE for essOdometer.0 is less than or equal to 4294967295.	Pass / Fail (Sec. 5.4.5)

© 2022 AASHTO / ITE / NEMA Copy Per TRF Distribution Permission

16	VERIFY that the RESPONSE VALUE for essOdometer.0 is APPROPRIATE.	Pass / Fail (Sec. 5.4.5)
17	VERIFY that the RESPONSE VALUE for essReferenceHeight.0 is greater than or equal to -400.	Pass / Fail (Sec. 5.5.1)
18	VERIFY that the RESPONSE VALUE for essReferenceHeight.0 is less than or equal to 8001.	Pass / Fail (Sec. 5.5.1)
19	VERIFY that the RESPONSE VALUE for essReferenceHeight.0 is APPROPRIATE.	Pass / Fail (Sec. 5.5.1)

Test Case Results		
Tested By:	***Date Tested:***	***Pass / Fail***
Test Case Notes:		

© 2022 AASHTO / ITE / NEMA

C.2.3.1.7 Retrieve Compressed Mobile Station Data

Test Case: 1.7	***Title:***	*Retrieve Compressed Mobile Station Data*	
	Description:	*This test case verifies that the ESS allows a management station to determine the location of, speed of, and pavement treatment being applied by the mobile platform*	
	Variables:	*Weather_Profile_Supported*	*PRL 3.5.2.3.1*
		PTS_Supported	*PRL 2.5.3.2*
	Pass/Fail Criteria:	*The device under test (DUT) shall pass every verification step included within the Test Case to pass the Test Case.*	

Step	***Test Procedure***	***Device***
1	CONFIGURE: Determine whether the device supports retrieving mobile weather profiles (PRL 3.5.2.3.1). RECORD this information as: »Weather_Profile_Supported	
2	CONFIGURE: Determine whether the device supports pavement treatment operations (PRL 2.5.3.2). RECORD this information as: »PTS_Supported	
3	GET the following object(s): »essMobileBlock.0	Pass / Fail (Sec. 3.5.1.3.3)
4	Decode the essMobileBlock.0 structure.	
5	VERIFY that the essMobileBlock.0 structure was decoded without error.	Pass / Fail (Sec. 5.3.7)
6	VERIFY that the RESPONSE VALUE for essMobileBlock.0 contains an essLatitude.0 field.	Pass / Fail (Sec. 3.5.1.3.1)
7	VERIFY that the essLatitude.0 field has a value between -90000000 and 90000001, inclusive.	Pass / Fail (Sec. 5.4.1)
8	VERIFY that the essLatitude.0 field is APPROPRIATE.	Pass / Fail (Sec. 5.4.1)
9	VERIFY that the RESPONSE VALUE for essMobileBlock.0 contains an essLongitude.0 field.	Pass / Fail (Sec. 3.5.1.3.1)
10	VERIFY that the essLongitude.0 field has a value between -180000000 and 180000001, inclusive.	Pass / Fail (Sec. 5.4.2)
11	VERIFY that the essLongitude.0 field is APPROPRIATE.	Pass / Fail (Sec. 5.4.2)
12	VERIFY that the RESPONSE VALUE for essMobileBlock.0 contains an essReferenceHeight.0 field.	Pass / Fail (Sec. 3.5.1.3.1)
13	VERIFY that the essReferenceHeight.0 field has a value between -400 and 8001, inclusive.	Pass / Fail (Sec. 5.5.1)
14	VERIFY that the essReferenceHeight.0 field is APPROPRIATE.	Pass / Fail (Sec. 5.5.1)
15	VERIFY that the RESPONSE VALUE for essMobileBlock.0 contains an essVehicleSpeed.0 field.	Pass / Fail (Sec. 3.5.1.3.1)

© 2022 AASHTO / ITE / NEMA Copy Per TRF Distribution Permission

16	VERIFY that the essVehicleSpeed.0 field has a value between 0 and 255, inclusive.	Pass / Fail (Sec. 5.4.3)
17	VERIFY that the essVehicleSpeed.0 field is APPROPRIATE.	Pass / Fail (Sec. 5.4.3)
18	VERIFY that the RESPONSE VALUE for essMobileBlock.0 contains an essVehicleBearing.0 field.	Pass / Fail (Sec. 3.5.1.3.1)
19	VERIFY that the essVehicleBearing.0 field has a value between 0 and 361, inclusive.	Pass / Fail (Sec. 5.4.4)
20	VERIFY that the essVehicleBearing.0 field is APPROPRIATE.	Pass / Fail (Sec. 5.4.4)
21	VERIFY that the RESPONSE VALUE for essMobileBlock.0 contains an essVehicleOdometer.0 field.	Pass / Fail (Sec. 3.5.1.3.1)
22	VERIFY that the essVehicleOdometer.0 field has a value between 0 and 4294967295, inclusive.	Pass / Fail (Sec. 5.4.5)
23	VERIFY that the essVehicleOdometer.0 field is APPROPRIATE.	Pass / Fail (Sec. 5.4.5)
24	IF Weather_Profile_Supported is equal to true, then proceed to Step 24.1; otherwise, proceed to Step 25.	
24.1	VERIFY that the RESPONSE VALUE for essMobileBlock.0 contains an essMobileFriction.0 field.	Pass / Fail (Sec. 3.5.2.3.1)
24.2	VERIFY that the essMobileFriction.0 field has a value between 0 and 101, inclusive.	Pass / Fail (Sec. 5.12.1)
24.3	VERIFY that the essMobileFriction.0 field is APPROPRIATE.	Pass / Fail (Sec. 5.12.1)
24.4	VERIFY that the RESPONSE VALUE for essMobileBlock.0 contains an essMobileObservationGroundState.0 field.	Pass / Fail (Sec. 3.5.2.3.1)
24.5	VERIFY that the essMobileObservationGroundState.0 field has a value between 1 and 18, inclusive.	Pass / Fail (Sec. 5.12.2)
24.6	VERIFY that the essMobileObservationGroundState.0 field is APPROPRIATE.	Pass / Fail (Sec. 5.12.2)
24.7	VERIFY that the RESPONSE VALUE for essMobileBlock.0 contains an essMobileObservationPavement.0 field.	Pass / Fail (Sec. 3.5.2.3.1)
24.8	VERIFY that the essMobileObservationPavement.0 field has a value between 1 and 25, inclusive.	Pass / Fail (Sec. 5.12.3)
24.9	VERIFY that the essMobileObservationPavement.0 field is APPROPRIATE.	Pass / Fail (Sec. 5.12.3)
25	IF PTS_Supported is equal to true, then proceed to Step 25.1; otherwise, proceed to EXIT.	
25.1	VERIFY that the RESPONSE VALUE for essMobileBlock.0 contains an essPaveTreatmentAmount.0 field.	Pass / Fail (Sec. 3.5.3.1.4)
25.2	VERIFY that the essTreatmentAmount.0 field has a value between 0 and 255, inclusive.	Pass / Fail (Sec. 5.13.4)

Copy Per TRF Distribution Permission © 2022 AASHTO / ITE / NEMA

25.3	VERIFY that the essTreatmentAmount.0 field is APPROPRIATE.	Pass / Fail (Sec. 5.13.4)
25.4	VERIFY that the RESPONSE VALUE for essMobileBlock.0 contains an essPaveTreatmentWidth.0 field.	Pass / Fail (Sec. 3.5.3.1.4)
25.5	VERIFY that the essPaveTreatmentWidth.0 field has a value between 0 and 255, inclusive.	Pass / Fail (Sec. 5.13.5)
25.6	VERIFY that the essPaveTreatmentWidth.0 field is APPROPRIATE.	Pass / Fail (Sec. 5.13.5)

Test Case Results		
Tested By:	***Date Tested:***	***Pass / Fail***
Test Case Notes:		

© 2022 AASHTO / ITE / NEMA

C.2.3.1.8 Retrieve ESS Status

Test Case: 1.8	***Title:***	*Retrieve ESS Status*
	Description:	*This test case verifies that the ESS allows a management station to retrieve ESS Status.*
	Variables:	
	Pass/Fail Criteria:	*The device under test (DUT) shall pass every verification step included within the Test Case in order to pass the Test Case.*

Step	***Test Procedure***	***Device***
1	GET the following object(s): » essStatus	Pass / Fail (Clause 3.5.1.2.4)
2	VERIFY that the RESPONSE VALUE for essStatus is equal to "noError".	Pass / Fail (Clause 5.3.10)
3	CONFIGURE: Disconnect the ESS from the primary power source. NOTE-This assumes that the ESS continues to operate on a secondary power source.	
4	VERIFY that the RESPONSE VALUE for essStatus is equal to "powerError".	Pass / Fail (Clause 5.3.10)
5	CONFIGURE: Reconnect the ESS to the primary power source.	
6	VERIFY that the RESPONSE VALUE for essStatus is equal to "noError".	Pass / Fail (Clause 5.3.10)
7	CONFIGURE: Disconnect a sensor from the ESS or create a condition that prevents a sensor from properly reporting a sensor value to the ESS.	
8	VERIFY that the RESPONSE VALUE for essStatus is equal to "sensorFailure".	Pass / Fail (Clause 5.3.10)
9	CONFIGURE: Reconnect the disconnected sensor to the ESS or remove the condition that prevented the sensor from properly reporting a sensor value to the ESS.	
10	VERIFY that the RESPONSE VALUE for essStatus is equal to "noError".	Pass / Fail (Clause 5.3.10)
11	CONFIGURE: Determine the duration of time, in seconds, that is required to elapse before a watchdog timer is triggered. RECORD this information as: » Watchdog_Timeout	
12	CONFIGURE: Manually terminate an ESS process or task that triggers watchdog failure.	
13	DELAY for Watchdog_Timeout seconds.	
14	VERIFY that the RESPONSE VALUE for essStatus is equal to "watchdogFailure".	Pass / Fail (Clause 5.3.10)
15	CONFIGURE: Reset the ESS or restart the ESS process or task terminated in STEP 12.	

Test Case Results		
Tested By:	***Date Tested:***	***Pass / Fail***
Test Case Notes:		

© 2022 AASHTO / ITE / NEMA

© 2022 AASHTO / ITE / NEMA
Copy Per TRF Distribution Permission

C.2.3.2 Weather Metadata Tests

C.2.3.2.1 Retrieve Atmospheric Pressure Height [Versions 01 to 03]

Test Case: 2.1	***Title:***	*Retrieve Atmospheric Pressure Height v01-v03*
	Description:	*This test case verifies that the ESS allows a management station to determine the relative height of the atmospheric pressure sensor*
	Variables:	
	Pass/Fail Criteria:	*The device under test (DUT) shall pass every verification step included within the Test Case to pass the Test Case.*

Step	***Test Procedure***	***Device***
1	GET the following object(s): »essPressureHeight.0	Pass / Fail (Sec. 3.5.2.1.1)
2	VERIFY that the RESPONSE VALUE for essPressureHeight.0 is greater than or equal to -1000.	Pass / Fail (Sec. 5.5.2)
3	VERIFY that the RESPONSE VALUE for essPressureHeight.0 is less than or equal to 1001.	Pass / Fail (Sec. 5.5.2)
4	VERIFY that the RESPONSE VALUE for essPressureHeight.0 is APPROPRIATE.	Pass / Fail (Sec. 5.5.2)

Test Case Results		
Tested By:	***Date Tested:***	***Pass / Fail***
Test Case Notes:		

© 2022 AASHTO / ITE / NEMA

C.2.3.2.2 Retrieve Metadata for Each Wind Sensor

Test Case: 2.2	***Title:***	*Retrieve Metadata for Each Wind Sensor*	
	Description:	*This test case verifies that the ESS allows a management station to determine the location and relative height of each wind sensor*	
	Variables:	*Required_Wind_Sensors*	*(PRL 3.6.2)*
	Pass/Fail Criteria:	*The device under test (DUT) shall pass every verification step included within the Test Case to pass the Test Case.*	

Step	***Test Procedure***	***Device***
1	CONFIGURE: Determine the number of wind sensors that the ESS is required to support (PRL 3.6.2). RECORD this information as: »Required_Wind_Sensors	
2	GET the following object(s): »windSensorTableNumSensors.0	Pass / Fail (Sec. 3.5.2.1.2)
3	VERIFY that the RESPONSE VALUE for windSensorTableNumSensors.0 is greater than or equal to Required_Wind_Sensors.	Pass / Fail (Sec. 3.6.2)
4	Determine the RESPONSE VALUE for windSensorTableNumSensors.0. RECORD this information as: »Supported_Wind_Sensors	
5	FOR EACH value, N, from 1 to Supported_Wind_Sensors, perform Steps 5.1 through 5.6.	
5.1	GET the following object(s): »windSensorHeight.N »windSensorLocation.N	Pass / Fail (Sec. 3.5.2.1.2)
5.2	VERIFY that the RESPONSE VALUE for windSensorHeight.N is greater than or equal to -1000.	Pass / Fail (Sec. 5.6.10.2)
5.3	VERIFY that the RESPONSE VALUE for windSensorHeight.N is less than or equal to 1001.	Pass / Fail (Sec. 5.6.10.2)
5.4	VERIFY that the RESPONSE VALUE for windSensorHeight.N is APPROPRIATE.	Pass / Fail (Sec. 5.6.10.2)
5.5	VERIFY that the RESPONSE VALUE for windSensorLocation.N is a valid DisplayString with no more than 255 characters.	Pass / Fail (Sec. 5.6.10.3)
5.6	VERIFY that the RESPONSE VALUE for windSensorLocation.N is APPROPRIATE.	Pass / Fail (Sec. 5.6.10.3)

Test Case Results		
Tested By:	***Date Tested:***	***Pass / Fail***
Test Case Notes:		

© 2022 AASHTO / ITE / NEMA

C.2.3.2.3 Retrieve Temperature Sensor Metadata

Test Case: 2.3	***Title:***	*Retrieve Temperature Sensor Metadata*	
	Description:	*This test case verifies that the ESS allows a management station to determine the relative height of each temperature sensor*	
	Variables:	*Required_Temp_Sensors*	*(PRL 3.6.3)*
	Pass/Fail Criteria:	*The device under test (DUT) shall pass every verification step included within the Test Case to pass the Test Case.*	

Step	***Test Procedure***	***Device***
1	CONFIGURE: Determine the number of temperature sensors required by the specification (PRL 3.6.3). RECORD this information as: »Required_Temp_Sensors	
2	GET the following object(s): »essNumTemperatureSensors.0	Pass / Fail (Sec. 3.5.2.1.3)
3	VERIFY that the RESPONSE VALUE for essNumTemperatureSensors.0 is greater than or equal to Required_Temp_Sensors.	Pass / Fail (Sec. 3.6.3)
4	Determine the RESPONSE VALUE for essNumTemperatureSensors.0. RECORD this information as: »Supported_Temp_Sensors	
5	FOR EACH value, N, from 1 to Supported_Temp_Sensors, perform Steps 5.1 through 5.4.	
5.1	GET the following object(s): »essTemperatureSensorHeight.N	Pass / Fail (Sec. 3.5.2.1.3)
5.2	VERIFY that the RESPONSE VALUE for essTemperatureSensorHeight.N is greater than or equal to -1000.	Pass / Fail (Sec. 5.7.3.2)
5.3	VERIFY that the RESPONSE VALUE for essTemperatureSensorHeight.N is less than or equal to 1001.	Pass / Fail (Sec. 5.7.3.2)
5.4	VERIFY that the RESPONSE VALUE for essTemperatureSensorHeight.N is APPROPRIATE.	Pass / Fail (Sec. 5.7.3.2)

Test Case Results		
Tested By:	***Date Tested:***	***Pass / Fail***
Test Case Notes:		

© 2022 AASHTO / ITE / NEMA

C.2.3.2.4 Retrieve Pavement Sensor Metadata

Test Case: 2.4	***Title:***	*Retrieve Pavement Sensor Metadata*
	Description:	*This test case verifies that the ESS allows a management station to determine available metadata for each pavement sensor.*
	Variables:	*Required_Pavement_Sensors* *(PRL 3.6.8)*
	Pass/Fail Criteria:	*The device under test (DUT) shall pass every verification step included within the Test Case to pass the Test Case.*

Step	***Test Procedure***	***Device***
1	CONFIGURE: Determine the number of pavement sensors required by the specification (PRL 3.6.8). RECORD this information as: »Required_Pavement_Sensors	
2	GET the following object(s): »numEssPavementSensors.0	Pass / Fail (Sec. 3.5.2.1.4)
3	VERIFY that the RESPONSE VALUE for numEssPavementSensors.0 is greater than or equal to Required_Pavement_Sensors.	Pass / Fail (Sec. 3.6.8)
4	Determine the RESPONSE VALUE for numEssPavementSensors.0. RECORD this information as: »Supported_Pavement_Sensors	
5	FOR EACH value, N, from 1 to Supported_Pavement_Sensors, perform Steps 5.1 through 5.15.	
5.1	GET the following object(s): »essPavementSensorLocation.N »essPavementType.N »essPavementElevation.N »essPavementExposure.N »essPavementSensorType.N	Pass / Fail (Sec. 3.5.2.1.4)
5.2	VERIFY that the RESPONSE VALUE for essPavementSensorLocation.N is a valid DisplayString with no more than 255 characters.	Pass / Fail (Sec. 5.11.3.2)
5.3	VERIFY that the RESPONSE VALUE for essPavementSensorLocation.N is APPROPRIATE.	
5.4	VERIFY that the RESPONSE VALUE for essPavementType.N is greater than or equal to 1.	Pass / Fail (Sec. 5.11.3.3)
5.5	VERIFY that the RESPONSE VALUE for essPavementType.N is less than or equal to 9.	Pass / Fail (Sec. 5.11.3.3)
5.6	VERIFY that the RESPONSE VALUE for essPavementType.N is APPROPRIATE.	Pass / Fail (Sec. 5.11.3.3)
5.7	VERIFY that the RESPONSE VALUE for essPavementElevation.N is greater than or equal to -1000.	Pass / Fail (Sec. 5.11.3.4)
5.8	VERIFY that the RESPONSE VALUE for essPavementElevation.N is less than or equal to 1001.	Pass / Fail (Sec. 5.11.3.4)
5.9	VERIFY that the RESPONSE VALUE for essPavementElevation.N is APPROPRIATE.	Pass / Fail (Sec. 5.11.3.4)
5.10	VERIFY that the RESPONSE VALUE for essPavementExposure.N is greater than or equal to 0.	Pass / Fail (Sec. 5.11.3.5)

© 2022 AASHTO / ITE / NEMA Copy Per TRF Distribution Permission

5.11	VERIFY that the RESPONSE VALUE for essPavementExposure.N is less than or equal to 101.	Pass / Fail (Sec. 5.11.3.5)
5.12	VERIFY that the RESPONSE VALUE for essPavementExposure.N is APPROPRIATE.	Pass / Fail (Sec. 5.11.3.5)
5.13	VERIFY that the RESPONSE VALUE for essPavementSensorType.N is greater than or equal to 1.	Pass / Fail (Sec. 5.11.3.6)
5.14	VERIFY that the RESPONSE VALUE for essPavementSensorType.N is less than or equal to 8.	Pass / Fail (Sec. 5.11.3.6)
5.15	VERIFY that the RESPONSE VALUE for essPavementSensorType.N is APPROPRIATE.	Pass / Fail (Sec. 5.11.3.6)

Test Case Results		
Tested By:	***Date Tested:***	***Pass / Fail***
Test Case Notes:		

© 2022 AASHTO / ITE / NEMA

C.2.3.2.5 Retrieve Subsurface Sensor Metadata

Test Case: 2.5	***Title:***	*Retrieve Subsurface Sensor Metadata*
	Description:	*This test case verifies that the ESS allows a management station to determine available metadata for each subsurface sensor.*
	Variables:	*Required_Subsurface_Sensors* *(PRL 3.6.11)*
	Pass/Fail Criteria:	*The device under test (DUT) shall pass every verification step included within the Test Case to pass the Test Case.*

Step	***Test Procedure***	***Device***
1	CONFIGURE: Determine the number of subsurface sensors required by the specification (3.6.11). RECORD this information as: »Required_Subsurface_Sensors	
2	GET the following object(s): »numEssSubSurfaceSensors.0	Pass / Fail (Sec. 3.5.2.1.5)
3	VERIFY that the RESPONSE VALUE for numEssSubSurfaceSensors.0 is greater than or equal to Required_Subsurface_Sensors.	Pass / Fail (Sec. 3.6.11)
4	Determine the RESPONSE VALUE for numEssSubSurfaceSensors.0. RECORD this information as: »Supported_Subsurface_Sensors	
5	FOR EACH value, N, from 1 to Supported_Subsurface_Sensors, perform Steps 5.1 through 5.9.	
5.1	GET the following object(s): »essSubSurfaceSensorLocation.N »essSubSurfaceType.N »essSubSurfaceSensorDepth.N	Pass / Fail (Sec. 3.5.2.1.5)
5.2	VERIFY that the RESPONSE VALUE for essSubSurfaceSensorLocation.N is a valid DisplayString with no more than 255 characters.	Pass / Fail (Sec. 5.11.6.2)
5.3	VERIFY that the RESPONSE VALUE for essSubSurfaceSensorLocation.N is APPROPRIATE.	Pass / Fail (Sec. 5.11.6.2)
5.4	VERIFY that the RESPONSE VALUE for essSubSurfaceType.N is greater than or equal to 1.	Pass / Fail (Sec. 5.11.6.3)
5.5	VERIFY that the RESPONSE VALUE for essSubSurfaceType.N is less than or equal to 12.	Pass / Fail (Sec. 5.11.6.3)
5.6	VERIFY that the RESPONSE VALUE for essSubSurfaceType.N is APPROPRIATE.	Pass / Fail (Sec. 5.11.6.3)
5.7	VERIFY that the RESPONSE VALUE for essSubSurfaceSensorDepth.N is greater than or equal to 0.	Pass / Fail (Sec. 5.11.6.4)
5.8	VERIFY that the RESPONSE VALUE for essSubSurfaceSensorDepth.N is less than or equal to 1001.	Pass / Fail (Sec. 5.11.6.4)
5.9	VERIFY that the RESPONSE VALUE for essSubSurfaceSensorDepth.N is APPROPRIATE.	Pass / Fail (Sec. 5.11.6.4)

© 2022 AASHTO / ITE / NEMA Copy Per TRF Distribution Permission

Test Case Results		
Tested By:	***Date Tested:***	***Pass / Fail***
Test Case Notes:		

© 2022 AASHTO / ITE / NEMA

C.2.3.2.6 Configure Pavement Sensor

Test Case: 2.6	***Title:***	*Configure Pavement Sensor*
	Description:	*This test case verifies that the ESS allows a management station to store configuration information for a specified pavement sensor.*
	Variables:	*Required_Pavement_Sensors* *(PRL 3.6.8)*
	Pass/Fail Criteria:	*The device under test (DUT) shall pass every verification step included within the Test Case to pass the Test Case.*

Step	***Test Procedure***	***Device***
1	CONFIGURE: Determine the number of pavement sensors required by the specification (PRL 3.6.8). RECORD this information as: »Required_Pavement_Sensors	
2	Determine a random value between 1 and Required_Pavement_Sensors. RECORD this information as: »Subject_Pavement_Sensor	
3	Determine a random DisplayString with a length between 1 and 255 characters. RECORD this information as: »Pavement_Sensor_Location	
4	Determine a random number between 1 and 9. RECORD this information as: »Pavement_Type	
5	Determine a random number between 0 and 101. RECORD this information as: »Pavement_Exposure	
6	GET the following object(s): »essPavementSensorLocation.Subject_Pavement_Sensor »essPavementType.Subject_Pavement_Sensor »essPavementExposure.Subject_Pavement_Sensor	Pass / Fail (RFC 1157)
7	Determine the RESPONSE VALUE for essPavementSensorLocation.Subject_Pavement_Sensor. RECORD this information as: »Orig_Pavement_Sensor_Location	
8	Determine the RESPONSE VALUE for essPavementType.Subject_Pavement_Sensor. RECORD this information as: »Orig_Pavement_Type	
9	Determine the RESPONSE VALUE for essPavementExposure.Subject_Pavement_Sensor. RECORD this information as: »Orig_Pavement_Exposure	
10	SET the following object(s) to the value(s) shown: »essPavementSensorLocation.Subject_Pavement_Sensor = Pavement_Sensor_Location »essPavementType.Subject_Pavement_Sensor = Pavement_Type »essPavementExposure.Subject_Pavement_Sensor = Pavement_Exposure	Pass / Fail (Sec. 3.5.2.1.6)
11	GET the following object(s): »essPavementSensorLocation.Subject_Pavement_Sensor »essPavementType.Subject_Pavement_Sensor »essPavementExposure.Subject_Pavement_Sensor	Pass / Fail (RFC 1157)
12	VERIFY that the RESPONSE VALUE for essPavementSensorLocation.Subject_Pavement_Sensor is equal to Pavement_Sensor_Location.	Pass / Fail (Sec. 5.11.3.2)

© 2022 AASHTO / ITE / NEMA Copy Per TRF Distribution Permission

13	VERIFY that the RESPONSE VALUE for essPavementType.Subject_Pavement_Sensor is equal to Pavement_Type.	Pass / Fail (Sec. 5.11.3.3)
14	VERIFY that the RESPONSE VALUE for essPavementExposure.Subject_Pavement_Sensor is equal to Pavement_Exposure.	Pass / Fail (Sec. 5.11.3.5)
15	SET the following object(s) to the value(s) shown: »essPavementSensorLocation.Subject_Pavement_Sensor = Orig_Pavement_Sensor_Location »essPavementType.Subject_Pavement_Sensor = Orig_Pavement_Type »essPavementExposure.Subject_Pavement_Sensor = Orig_Pavement_Exposure	Pass / Fail (Sec. 3.5.2.1.6)
16	GET the following object(s): »essPavementSensorLocation.Subject_Pavement_Sensor »essPavementType.Subject_Pavement_Sensor »essPavementExposure.Subject_Pavement_Sensor	Pass / Fail (RFC 1157)
17	VERIFY that the RESPONSE VALUE for essPavementSensorLocation.Subject_Pavement_Sensor is equal to Orig_Pavement_Sensor_Location.	Pass / Fail (Sec. 5.11.3.2)
18	VERIFY that the RESPONSE VALUE for essPavementType.Subject_Pavement_Sensor is equal to Orig_Pavement_Type.	Pass / Fail (Sec. 5.11.3.3)
19	VERIFY that the RESPONSE VALUE for essPavementExposure.Subject_Pavement_Sensor is equal to Orig_Pavement_Exposure.	Pass / Fail (Sec. 5.11.3.5)

Test Case Results		
Tested By:	***Date Tested:***	***Pass / Fail***
Test Case Notes:		

© 2022 AASHTO / ITE / NEMA

C.2.3.2.7 Configure Subsurface Sensor

Test Case: 2.7	***Title:***	*Configure Subsurface Sensor*
	Description:	*This test case verifies that the ESS allows a management station to store configuration information for a specified subsurface sensor.*
	Variables:	*Required_Subsurface_Sensors* *(PRL 3.6.11)*
	Pass/Fail Criteria:	*The device under test (DUT) shall pass every verification step included within the Test Case to pass the Test Case.*

Step	***Test Procedure***	***Device***
1	CONFIGURE: Determine the number of subsurface sensors as required by the specification (PRL 3.6.11). RECORD this information as: »Required_Subsurface_Sensors	
2	Determine a random value between 1 and Required_Subsurface_Sensors. RECORD this information as: »Subject_Subsurface_Sensor	
3	Determine a random DisplayString with a length between 1 and 255 characters. RECORD this information as: »Subsurface_Sensor_Location	
4	Determine a random number between 1 and 12. RECORD this information as: »Subsurface_Type	
5	Determine a random value between 0 and 1001. RECORD this information as: »Subsurface_Depth	
6	GET the following object(s): »essSubSurfaceSensorLocation.Subject_Subsurface_Sensor »essSubSurfaceType.Subject_Subsurface_Sensor »essSubSurfaceSensorDepth.Subject_Subsurface_Sensor	Pass / Fail (RFC 1157)
7	Determine the retrieved information. RECORD this information as: »Orig_Subsurface_Sensor_Location (the original value of the subsurface sensor location object) »Orig_Subsurface_Type (the original value of the subsurface type object) »Orig_Subsurface_Depth (the original value of the subsurface depth object)	
8	SET the following object(s) to the value(s) shown: »essSubSurfaceSensorLocation.Subject_Subsurface_Sensor = Subsurface_Sensor_Location »essSubSurfaceType.Subject_Subsurface_Sensor = Subsurface_Type »essSubSurfaceSensorDepth.Subject_Subsurface_Sensor = Subsurface_Depth	Pass / Fail (Sec. 3.5.2.1.7)
9	GET the following object(s): »essSubSurfaceSensorLocation.Subject_Subsurface_Sensor »essSubSurfaceType.Subject_Subsurface_Sensor »essSubSurfaceSensorDepth.Subject_Subsurface_Sensor	Pass / Fail (RFC 1157)
10	VERIFY that the RESPONSE VALUE for essSubSurfaceSensorLocation.Subject_Subsurface_Sensor is equal to Subsurface_Sensor_Location.	Pass / Fail (Sec. 5.11.6.2)
11	VERIFY that the RESPONSE VALUE for essSubSurfaceType.Subject_Subsurface_Sensor is equal to Subsurface_Type.	Pass / Fail (Sec. 5.11.6.3)
12	VERIFY that the RESPONSE VALUE for essSubSurfaceSensorDepth.Subject_Subsurface_Sensor is equal to Subsurface_Depth.	Pass / Fail (Sec. 5.11.6.4)

© 2022 AASHTO / ITE / NEMA Copy Per TRF Distribution Permission

13	SET the following object(s) to the value(s) shown: »essSubSurfaceSensorLocation.Subject_Subsurface_Sensor = Orig_Subsurface_Sensor_Location »essSubSurfaceType.Subject_Subsurface_Sensor = Orig_Subsurface_Type »essSubSurfaceSensorDepth.Subject_Subsurface_Sensor = Orig_Subsurface_Depth	Pass / Fail (Sec. 3.5.2.1.7)
14	GET the following object(s): »essSubSurfaceSensorLocation.Subject_Subsurface_Sensor »essSubSurfaceType.Subject_Subsurface_Sensor »essSubSurfaceSensorDepth.Subject_Subsurface_Sensor	Pass / Fail (RFC 1157)
15	VERIFY that the RESPONSE VALUE for essSubSurfaceSensorLocation.Subject_Subsurface_Sensor is equal to Orig_Subsurface_Sensor_Location.	Pass / Fail (Sec. 5.11.6.2)
16	VERIFY that the RESPONSE VALUE for essSubSurfaceType.Subject_Subsurface_Sensor is equal to Orig_Subsurface_Type.	Pass / Fail (Sec. 5.11.6.3)
17	VERIFY that the RESPONSE VALUE for essSubSurfaceSensorDepth.Subject_Subsurface_Sensor is equal to Orig_Subsurface_Depth.	Pass / Fail (Sec. 5.11.6.4)

Test Case Results		
Tested By:	***Date Tested:***	***Pass / Fail***
Test Case Notes:		

© 2022 AASHTO / ITE / NEMA

C.2.3.2.8 Configure Passive Ice Detection Logic

Test Case: 2.8	***Title:***	*Configure Passive Ice Detection Logic*
	Description:	*This test case verifies that the ESS allows a management station to store configuration information regarding the pavement treatments being applied.*
	Variables:	
	Pass/Fail Criteria:	*The device under test (DUT) shall pass every verification step included within the Test Case to pass the Test Case.*

Step	***Test Procedure***	***Device***
1	GET the following object(s): »numEssTreatments.0	Pass / Fail (RFC 1157)
2	Determine the RESPONSE VALUE for numEssTreatments. RECORD this information as: »Num_Treatments	
3	FOR EACH value, N, from 1 to Num_Treatments, perform Steps 3.1 through 3.2.	
3.1	GET the following object(s): »essPaveTreatProductType.N »essPaveTreatProductForm.N »essPercentProductMix.N	Pass / Fail (RFC 1157)
3.2	Determine the values for the retrieved information. RECORD this information as: »Product_Type[N] (the type of the Nth product read from the device) »Product_Form[N] (the form of the Nth product read from the device) »Product_Percent[N] (the percentage of the Nth product read from the device)	
4	GET the following object(s): »numEssTreatments.0	Pass / Fail (Sec. 3.5.2.1.8)
5	Determine the RESPONSE VALUE for numEssTreatments.0. RECORD this information as: »Num_Treatments	
6	FOR EACH value, N, from 1 to Num_Treatments, perform Steps 6.1 through 6.3.	
6.1	Determine a random value from 1 to 14. RECORD this information as: »Treatment_Type	
6.2	Determine a random value from 1 to 4. RECORD this information as: »Treatment_Form	
6.3	SET the following object(s) to the value(s) shown: »essPaveTreatProductType.N = Treatment_Type »essPaveTreatProductForm.N = Treatment_Form	Pass / Fail (Sec. 3.5.2.1.8)
7	Determine the total percentage of products (i.e., 100). RECORD this information as: »Percentage_Available	
8	FOR EACH value, N, from 1 to Num_Treatments, perform Steps 8.1 through 8.3.	
8.1	IF N is equal to Num_Treatments, then proceed to Step 8.1.1; otherwise, proceed to Step 8.2.1.	
8.1.1	Determine Percentage_Available. RECORD this information as: »Treatment_Percent GO TO Step 8.3.	

© 2022 AASHTO / ITE / NEMA

8.2.1	Determine a random value between 0 and Percentage_Available. RECORD this information as: »Treatment_Percent	
8.2.2	Determine the remaining percentage available by subtracting Product_Percent from Percentage_Available. RECORD this information as: »Percentage_Available	
8.3	SET the following object(s) to the value(s) shown: »essPercentProductMix.N = Percentage_Available	Pass / Fail (Sec. 3.5.2.1.8)
9	GET the following object(s): »numEssTreatments.0	Pass / Fail (Sec. 3.5.2.1.8)
10	FOR EACH value, N, from 1 to Num_Treatments, perform Step 10.1.	
10.1	SET the following object(s) to the value(s) shown: »essPaveTreatProductType.N = Product_Type[N] »essPaveTreatProductForm.N = Product_Form[N]	Pass / Fail (Sec. 3.5.2.1.8)
11	FOR EACH value, N, from 1 to Num_Treatments, perform Step 11.1.	
11.1	SET the following object(s) to the value(s) shown: »essPercentProductMix.N = Product_Percent[N]	Pass / Fail (Sec. 3.5.2.1.8)

Test Case Results		
Tested By:	***Date Tested:***	***Pass / Fail***
Test Case Notes:		

© 2022 AASHTO / ITE / NEMA

C.2.3.2.9 Configure Snapshot Camera

Test Case: 2.9	***Title:***	*Configure Snapshot Camera*	
	Description:	*This test case verifies that the ESS allows a management station to store the storage location for newly taken snapshot images.*	
	Variables:	*Required_Cameras*	*(PRL 3.6.20)*
		Camera_Number_Supported	*(PRL 3.6.23)*
		Sequence_Numbers_Supported	*(PRL 3.6.24)*
		Date_Supported	*(PRL 3.6.25)*
		Time_Supported	*(PRL 3.6.26)*
		Long_Filenames_Supported	*(PRL 3.6.27)*
	Pass/Fail Criteria:	*The device under test (DUT) shall pass every verification step included within the Test Case to pass the Test Case.*	

Step	***Test Procedure***	***Device***
1	CONFIGURE: Determine the number of cameras required by the specification (PRL 3.6.20). RECORD this information as: »Required_Cameras	
2	CONFIGURE: Determine whether the ESS allows the filename to include a camera number field (PRL 3.6.23). RECORD this information as: »Camera_Number_Supported	
3	CONFIGURE: Determine whether the ESS allows the filenames to include sequence numbers (PRL 3.6.24). RECORD this information as: »Sequence_Numbers_Supported	
4	CONFIGURE: Determine whether the camera allows a date to be included in the filename (PRL 3.6.25). RECORD this information as: »Date_Supported	
5	CONFIGURE: Determine whether the ESS allows the filenames to include a time field (PRL 3.6.26). RECORD this information as: »Time_Supported	
6	CONFIGURE: Determine whether the ESS allows the filenames to exceed eight characters in length (PRL 3.6.27). RECORD this information as: »Long_Filenames_Supported	
7	GET the following object(s): »essSnapshotNumberOfCameras.0	Pass / Fail (Sec. 3.5.2.3.9)
8	VERIFY that the RESPONSE VALUE for essSnapshotNumberOfCameras.0 is greater than or equal to Required_Cameras.	Pass / Fail (Sec. 3.6.20)
9	Determine the RESPONSE VALUE for essSnapshotNumberOfCameras.0. RECORD this information as: »Num_Cameras	
10	Determine a random number between 1 and Required_Cameras. RECORD this information as: »Subject_Camera	
11	FOR EACH value, N, from 1 to Num_Cameras, perform Steps 11.1 through 11.4.	
11.1	GET the following object(s): »essSnapshotCameraDescription.N »essSnapshotCameraStoragePath.N	Pass / Fail (Sec. 3.5.2.3.9)

© 2022 AASHTO / ITE / NEMA

11.2	IF N is equal to Subject_Camera, then proceed to Step 11.2.1; otherwise, proceed to Step 11.3.	
11.2.1	Determine the RESPONSE VALUE for essSnapshotCameraDescription.N. RECORD this information as: »Orig_Description	
11.3	GET the following object(s): »essSnapshotCameraFilename.N	Pass / Fail (Sec. 3.5.2.3.9)
11.4	IF N is equal to Subject_Camera, then proceed to Step 11.4.1; otherwise, proceed to Step 12.	
11.4.1	Determine the RESPONSE VALUE for essSnapshotCameraFilename.N. RECORD this information as: »Orig_Filename	
12	Determine a random string of 3 characters. RECORD this information as: »Base_Filename	
13	Determine a random DisplayString containing between 1 and 255 characters. RECORD this information as: »Camera_Location	
14	SET the following object(s) to the value(s) shown: »essSnapshotCameraDescription.Subject_Camera = Camera_Location	Pass / Fail (Sec. 3.5.2.1.9)
15	SET the following object(s) to the value(s) shown: »essSnapshotCameraFilename.Subject_Camera = Base_Filename	Pass / Fail (Sec. 3.5.2.1.9)
16	PERFORM the test case labeled 'Retrieve Snapshot' (2.3.7.2).	Pass / Fail
17	IF Camera_Number_Supported is equal to 1, then proceed to Step 17.1; otherwise, proceed to Step 18.	
17.1	SET the following object(s) to the value(s) shown: »essSnapshotCameraDescription.Subject_Camera = Camera_Location	Pass / Fail (Sec. 3.5.2.1.9)
17.2	SET the following object(s) to the value(s) shown: »essSnapshotCameraFilename.Subject_Camera = '.jpg'	Pass / Fail (Sec. 3.5.2.1.9)
17.3	PERFORM the test case labeled 'Retrieve Snapshot' (2.3.7.2).	
18	IF Sequence_Numbers_Supported is equal to 1, then proceed to Step 18.1; otherwise, proceed to Step 19.	
18.1	SET the following object(s) to the value(s) shown: »essSnapshotCameraDescription.Subject_Camera = Camera_Location	Pass / Fail (Sec. 3.5.2.1.9)
18.2	SET the following object(s) to the value(s) shown: »essSnapshotCameraFilename.Subject_Camera = '.jpg'	Pass / Fail (Sec. 3.5.2.1.9)
18.3	PERFORM the test case labeled 'Retrieve Snapshot' (2.3.7.2).	
19	IF Date_Supported is equal to 1, then proceed to Step 19.1; otherwise, proceed to Step 20.	
19.1	SET the following object(s) to the value(s) shown: »essSnapshotCameraDescription.Subject_Camera = Camera_Location	Pass / Fail (Sec. 3.5.2.1.9)
19.2	SET the following object(s) to the value(s) shown: »essSnapshotCameraFilename.Subject_Camera = '.jpg'	Pass / Fail (Sec. 3.5.2.1.9)

Copy Per TRF Distribution Permission © 2022 AASHTO / ITE / NEMA

19.3	PERFORM the test case labeled 'Retrieve Snapshot' (2.3.7.2).	
20	IF Time_Supported is equal to 1, then proceed to Step 20.1; otherwise, proceed to Step 21.	
20.1	SET the following object(s) to the value(s) shown: »essSnapshotCameraDescription.Subject_Camera = Camera_Location	Pass / Fail (Sec. 3.5.2.1.9)
20.2	SET the following object(s) to the value(s) shown: »essSnapshotCameraFilename.Subject_Camera = '.jpg'	Pass / Fail (Sec. 3.5.2.1.9)
20.3	PERFORM the test case labeled 'Retrieve Snapshot' (2.3.7.2).	
21	IF Long_Filenames_Supported is equal to 1, then proceed to Step 21.1; otherwise, proceed to Step 22.	
21.1	SET the following object(s) to the value(s) shown: »essSnapshotCameraDescription.Subject_Camera = Camera_Location	Pass / Fail (Sec. 3.5.2.1.9)
21.2	CONFIGURE: Determine a random string of 25 characters pre-pended to the string ".jpg". RECORD this information as: »Long_Filename	
21.3	SET the following object(s) to the value(s) shown: »essSnapshotCameraFilename.Subject_Camera = Long_Filename	Pass / Fail (Sec. 3.5.2.1.9)
21.4	PERFORM the test case labeled 'Retrieve Snapshot' (2.3.7.2).	
22	SET the following object(s) to the value(s) shown: »essSnapshotCameraDescription.Subject_Camera = Orig_Description	Pass / Fail (Sec. 3.5.2.1.9)
23	SET the following object(s) to the value(s) shown: »essSnapshotCameraFilename.Subject_Camera = Orig_Filename	Pass / Fail (Sec. 3.5.2.1.9)
24	GET the following object(s): »essSnapshotCameraDescription.Subject_Camera	Pass / Fail (RFC 1157)
25	VERIFY that the RESPONSE VALUE for essSnapshotCameraDescription.Subject_Camera is equal to Orig_Description.	Pass / Fail (Sec. 3.5.2.1.9)
26	GET the following object(s): »essSnapshotCameraFilename.Subject_Camera	Pass / Fail (RFC 1157)
27	VERIFY that the RESPONSE VALUE for essSnapshotCameraFilename.Subject_Camera is equal to Orig_Filename.	Pass / Fail (Sec. 3.5.2.1.9)

Test Case Results		
Tested By:	***Date Tested:***	***Pass / Fail***
Test Case Notes:		

C.2.3.2.10 Retrieve Atmospheric Pressure Metadata - Location

Test Case: 2.10	***Title:***	*Retrieve Metadata for Each Atmospheric Pressure Sensor - Location*
	Description:	*This test case verifies that the ESS allows a management station to determine the location and relative height of each atmospheric pressure sensor*

© 2022 AASHTO / ITE / NEMA Copy Per TRF Distribution Permission

	Variables:	*Supported_Pressure_Sensors*	*(PRL 3.6.1)*
	Pass/Fail Criteria:	*The device under test (DUT) shall pass every verification step included within the Test Case in order to pass the Test Case.*	

Step	***Test Procedure***	***Device***
1	CONFIGURE: Determine the number of pressure sensors that the ESS is required to support.	
2	GET the following object(s): »essNumPressureSensors.0	Pass / Fail (Clause 3.5.2.1.10.1)
3	VERIFY that the RESPONSE VALUE for essNumPressureSensors.0 is greater than or equal to Supported_Pressure_Sensors.	Pass / Fail (PRL 3.6.1)
4	Determine the RESPONSE VALUE for essNumPressureSensors.0. RECORD this information as: »Supported_Pressure_Sensors	
5	FOR EACH value, N, from 1 to Supported_Pressure_Sensors, perform Steps 5.1 through 5.12.	
5.1	GET the following object(s): »essPressureSensorHeight.N »essPressureSensorLatitude.N »essPressureSensorLongitude.N »essPressureSensorLocation.N	Pass / Fail (Clause 3.5.2.1.10.1)
5.2	VERIFY that the RESPONSE VALUE for essPressureSensorHeight.N is greater than or equal to -1000.	Pass / Fail (Clause 5.5.7.2)
5.3	VERIFY that the RESPONSE VALUE for essPressureSensorHeight.N is less than or equal to 1001.	Pass / Fail (Clause 5.5.7.2)
5.4	VERIFY that the RESPONSE VALUE for essPressureSensorHeight.N is APPROPRIATE.	Pass / Fail (Clause 5.5.7.2)
5.5	VERIFY that the RESPONSE VALUE for essPressureSensorLatitude.N is greater than or equal to -90000000.	Pass / Fail (Clause 5.5.7.3)
5.6	VERIFY that the RESPONSE VALUE for essPressureSensorLatitude.N is less than or equal to 90000001.	Pass / Fail (Clause 5.5.7.3)
5.7	VERIFY that the RESPONSE VALUE for essPressureSensorLatitude.N is APPROPRIATE.	Pass / Fail (Clause 5.5.7.3)
5.8	VERIFY that the RESPONSE VALUE for essPressureSensorLongitude.N is greater than or equal to -180000000.	Pass / Fail (Clause 5.5.7.4)
5.9	VERIFY that the RESPONSE VALUE for essPressureSensorLongitude.N is less than or equal to 180000001.	Pass / Fail (Clause 5.5.7.4)
5.10	VERIFY that the RESPONSE VALUE for essPressureSensorLongitude.N is APPROPRIATE.	Pass / Fail (Clause 5.5.7.4)
5.11	VERIFY that the RESPONSE VALUE for essPressureSensorLocation.N is a valid DisplayString with no more than 255 characters.	Pass / Fail (Clause 5.5.7.5)
5.12	VERIFY that the RESPONSE VALUE for essPressureSensorLocation.N is APPROPRIATE.	Pass / Fail (Clause 5.5.7.5)

Test Case Results

© 2022 AASHTO / ITE / NEMA

Tested By:	***Date Tested:***	***Pass / Fail***
Test Case Notes:		

© 2022 AASHTO / ITE / NEMA

C.2.3.2.11 Retrieve Atmospheric Pressure Metadata - Sensor Information

Test Case: 2.11	***Title:***	*Retrieve Metadata for Each Atmospheric Pressure Sensor – Sensor Information*	
	Description:	*This test case verifies that the ESS allows a management station to determine the sensor information of each atmospheric pressure sensor*	
	Variables:	*Supported_Pressure_Sensors*	*(PRL 3.6.1)*
	Pass/Fail Criteria:	*The device under test (DUT) shall pass every verification step included within the Test Case in order to pass the Test Case.*	

Step	***Test Procedure***	***Device***
1	CONFIGURE: Determine the number of pressure sensors that the ESS is required to support.	
2	GET the following object(s): »essNumPressureSensors.0	Pass / Fail (Clause 3.5.2.1.10.2)
3	VERIFY that the RESPONSE VALUE for essNumPressureSensors.0 is greater than or equal to Supported_Pressure_Sensors.	Pass / Fail (PRL 3.6.1)
4	Determine the RESPONSE VALUE for essNumPressureSensors.0. RECORD this information as: »Supported_Pressure_Sensors	
5	FOR EACH value, N, from 1 to Supported_Pressure_Sensors, perform Steps 5.1 through 5.4.	
5.1	GET the following object(s): »essPressureSensorModelInformation.N	Pass / Fail (Clause 3.5.2.1.10.2)
5.2	VERIFY that the RESPONSE VALUE for essPressureSensorModelInformation.N is greater than or equal to 0.	Pass / Fail (Clause 5.5.7.6)
5.3	VERIFY that the RESPONSE VALUE for essPressureSensorModelInformation.N is less than or equal to 255.	Pass / Fail (Clause 5.5.7.6)
5.4	VERIFY that the RESPONSE VALUE for essPressureSensorModelInformation.N is APPROPRIATE.	Pass / Fail (Clause 5.5.7.6)

Test Case Results		
Tested By:	***Date Tested:***	***Pass / Fail***
Test Case Notes:		

© 2022 AASHTO / ITE / NEMA

C.2.3.2.12 Configure Atmospheric Pressure Metadata - Location

Test Case: 2.12	***Title:***	*Configure Atmospheric Pressure Metadata – Location*
	Description:	*This test case verifies that the ESS allows a management station to store location and height information regarding atmospheric pressure sensors.*
	Variables:	
	Pass/Fail Criteria:	*The device under test (DUT) shall pass every verification step included within the Test Case in order to pass the Test Case.*

Step	***Test Procedure***	***Device***
1	GET the following object(s): »essNumPressureSensors.0	Pass / Fail (Clause 3.5.2.1.10.3)
2	Determine the RESPONSE VALUE for essNumPressureSensors.0. RECORD this information as: »Num_Pressure_Sensors	
3	FOR EACH value, N, from 1 to Num_Pressure_Sensors, perform Steps 3.1 through 3.2.	
3.1	GET the following object(s): »essPressureSensorHeight.N »essPressureSensorLatitude.N »essPressureSensorLongitude.N »essPressureSensorLocation.N	Pass / Fail (Clause 3.5.2.1.10.3)
3.2	Determine the values for the retrieved information. RECORD this information as: »Sensor_Height[N] (the height of the Nth pressure sensor from the device) »Sensor_Latitude[N] (the latitude of the Nth pressure sensor from the device) »Sensor_Longitude[N] (the longitude of the Nth pressure sensor from the device) »Sensor_Location[N] (the location of the Nth pressure sensor from the device)	
4	FOR EACH value, N, from 1 to Num_Pressure_Sensors, perform Steps 4.1 through 4.5.	
4.1	Determine a random value from -1000 to 1001. RECORD this information as: »Sensor_Height_Random.N	
4.2	Determine a random value from -90000000 to 90000001. RECORD this information as: »Sensor_Latitude_Random.N	
4.3	Determine a random value from -180000000 to 180000001. RECORD this information as: »Sensor_Longitude_Random.N	
4.4	Determine a random display string from 1 to 255 characters in length. RECORD this information as: »Sensor_Location_Random.N	
4.5	SET the following object(s) to the value(s) shown: »essPressureSensorHeight.N = Sensor_Height_Random.N »essPressureSensorLatitude.N = Sensor_Latitude_Random.N »essPressureSensorLongitude.N = Sensor_Longitude_Random.N »essPressureSensorLocation.N = Sensor_Location_Random.N	Pass / Fail (Clause 3.5.2.10.3)
5	FOR EACH value, N, from 1 to Num_Pressure_Sensors, perform Steps 5.1 through 5.5.	
5.1	GET the following object(s): »essPressureSensorHeight.N »essPressureSensorLatitude.N »essPressureSensorLongitude.N »essPressureSensorLocation.N	Pass / Fail (Clause 3.5.2.1.10.3)

© 2022 AASHTO / ITE / NEMA Copy Per TRF Distribution Permission

5.2	VERIFY that the RESPONSE VALUE for essPressureSensorHeight.N is equal to Sensor_Height_Random.N.	Pass / Fail (Clause 5.5.7.2)
5.3	VERIFY that the RESPONSE VALUE for essPressureSensorLatitudet.N is equal to Sensor_Latitude_Random.N.	Pass / Fail (Clause 5.5.7.3)
5.4	VERIFY that the RESPONSE VALUE for essPressureSensorLongitude.N is equal to Sensor_Longitude_Random.N.	Pass / Fail (Clause 5.5.7.4)
5.5	VERIFY that the RESPONSE VALUE for essPressureSensorLocation.N is equal to Sensor_Location_Random.N.	Pass / Fail (Clause 5.5.7.5)
6	FOR EACH value, N, from 1 to Num_Pressure_Sensors, perform Steps 6.1 through 6.1.	
6.1	SET the following object(s) to the value(s) shown: »essPressureSensorHeight.N = Sensor_Height.N »essPressureSensorLatitude.N = Sensor_Latitude.N »essPressureSensorLongitude.N = Sensor_Longitude.N »essPressureSensorLocation.N = Sensor_Location.N	Pass / Fail (Clause 3.5.2.10.3)
7	FOR EACH value, N, from 1 to Num_Pressure_Sensors, perform Steps 7.1 through 7.5.	
7.1	GET the following object(s): »essPressureSensorHeight.N »essPressureSensorLatitude.N »essPressureSensorLongitude.N »essPressureSensorLocation.N	Pass / Fail (Clause 3.5.2.1.10.3)
7.2	VERIFY that the RESPONSE VALUE for essPressureSensorHeight.N is equal to Sensor_Height.N.	Pass / Fail (Clause 5.5.7.2)
7.3	VERIFY that the RESPONSE VALUE for essPressureSensorLatitude.N is equal to Sensor_Latitude.N.	Pass / Fail (Clause 5.5.7.3)
7.4	VERIFY that the RESPONSE VALUE for essPressureSensorLongitude.N is equal to Sensor_Longitude.N.	Pass / Fail (Clause 5.5.7.4)
7.5	VERIFY that the RESPONSE VALUE for essPressureSensorLocation.N is equal to Sensor_Location.N.	Pass / Fail (Clause 5.5.7.5)

Test Case Results		
Tested By:	***Date Tested:***	***Pass / Fail***
Test Case Notes:		

© 2022 AASHTO / ITE / NEMA

C.2.3.2.13 Retrieve Wind Sensor Metadata - Location

Test Case: 2.13	***Title:***	*Retrieve Metadata for Each Wind Sensor - Location*	
	Description:	*This test case verifies that the ESS allows a management station to determine the location and relative height of each wind sensor*	
	Variables:	*Supported_Wind_Sensors*	*(PRL 3.6.2)*
	Pass/Fail Criteria:	*The device under test (DUT) shall pass every verification step included within the Test Case in order to pass the Test Case.*	

Step	***Test Procedure***	***Device***
1	CONFIGURE: Determine the number of wind sensors that the ESS is required to support.	
2	GET the following object(s): »windSensorTableNumSensors.0	Pass / Fail (Clause 3.5.2.1.11.1)
3	VERIFY that the RESPONSE VALUE for windSensorTableNumSensors.0 is greater than or equal to Supported_ Wind _Sensors.	Pass / Fail (PRL 3.6.2)
4	Determine the RESPONSE VALUE for windSensorTableNumSensors.0. RECORD this information as: »Supported_ Wind _Sensors	
5	FOR EACH value, N, from 1 to Supported_ Wind _Sensors, perform Steps 5.1 through 5.7.	
5.1	GET the following object(s): »windSensorLatitude.N »windSensorLongitude.N	Pass / Fail (Clause 3.5.2.1.11.1)
5.2	VERIFY that the RESPONSE VALUE for windSensorLatitude.N is greater than or equal to -90000000.	Pass / Fail (Clause 5.6.10.11)
5.3	VERIFY that the RESPONSE VALUE for windSensorLatitude.N is less than or equal to 90000001.	Pass / Fail (Clause 5.6.10.11)
5.4	VERIFY that the RESPONSE VALUE for windSensorLatitude.N is APPROPRIATE.	Pass / Fail (Clause 5.6.10.11)
5.5	VERIFY that the RESPONSE VALUE for windSensorLongitude.N is greater than or equal to -180000000.	Pass / Fail (Clause 5.6.10.12)
5.6	VERIFY that the RESPONSE VALUE for windSensorLongitude.N is less than or equal to 180000001.	Pass / Fail (Clause 5.6.10.12)
5.7	VERIFY that the RESPONSE VALUE for windSensorLongitude.N is APPROPRIATE.	Pass / Fail (Clause 5.6.10.12)

Test Case Results		
Tested By:	***Date Tested:***	***Pass / Fail***
Test Case Notes:		

© 2022 AASHTO / ITE / NEMA

C.2.3.2.14 Retrieve Wind Sensor Metadata – Sensor Information

Test Case: 2.14	***Title:***	*Retrieve Metadata for Each Wind Sensor – Sensor Information*	
	Description:	*This test case verifies that the ESS allows a management station to determine the sensor information of each wind sensor*	
	Variables:	*Supported_Wind_Sensors*	*(PRL 3.6.2)*
	Pass/Fail Criteria:	*The device under test (DUT) shall pass every verification step included within the Test Case in order to pass the Test Case.*	

Step	***Test Procedure***	***Device***
1	CONFIGURE: Determine the number of wind sensors that the ESS is required to support.	
2	GET the following object(s): » windSensorTableNumSensors.0	Pass / Fail (Clause 3.5.2.1.11.2)
3	VERIFY that the RESPONSE VALUE for windSensorTableNumSensors.0 is greater than or equal to Supported_ Wind _Sensors.	Pass / Fail (PRL 3.6.2)
4	Determine the RESPONSE VALUE for windSensorTableNumSensors.0. RECORD this information as: »Supported_Wind_Sensors	
5	FOR EACH value, N, from 1 to Supported_ Wind _Sensors, perform Steps 5.1 through 5.4.	
5.1	GET the following object(s): »windSensorModelInformation.N	Pass / Fail (Clause 3.5.2.1.11.2)
5.2	VERIFY that the RESPONSE VALUE for windSensorModelInformation.N is greater than or equal to 0.	Pass / Fail (Clause 5.6.10.13)
5.3	VERIFY that the RESPONSE VALUE for windSensorModelInformation.N is less than or equal to 255.	Pass / Fail (Clause 5.6.10.13)
5.4	VERIFY that the RESPONSE VALUE for windSensorModelInformation.N is APPROPRIATE.	Pass / Fail (Clause 5.6.10.13)

Test Case Results		
Tested By:	***Date Tested:***	***Pass / Fail***
Test Case Notes:		

© 2022 AASHTO / ITE / NEMA

C.2.3.2.15 Configure Wind Sensor Metadata - Location

Test Case: 2.15	***Title:***	*Configure Wind Sensor Metadata - Location*
	Description:	*This test case verifies that the ESS allows a management station to store location and relative height information regarding wind sensors.*
	Variables:	
	Pass/Fail Criteria:	*The device under test (DUT) shall pass every verification step included within the Test Case in order to pass the Test Case.*

Step	***Test Procedure***	***Device***
1	GET the following object(s): » windSensorTableNumSensors.0	Pass / Fail (Clause 3.5.2.1.11.3)
2	Determine the RESPONSE VALUE for windSensorTableNumSensors.0. RECORD this information as: »Num_Wind_Sensors	
3	FOR EACH value, N, from 1 to Num_Wind_Sensors, perform Steps 3.1 through 3.2.	
3.1	GET the following object(s): »windSensorHeight.N »windSensorLatitude.N »windSensorLongitude.N »windSensorLocation.N	Pass / Fail (Clause 3.5.2.1.11.3)
3.2	Determine the values for the retrieved information. RECORD this information as: »Sensor_Height[N] (the height of the Nth wind sensor from the device) »Sensor_Latitude[N] (the latitude of the Nth wind sensor from the device) »Sensor_Longitude[N] (the longitude of the Nth wind sensor from the device) »Sensor_Location[N] (the location of the Nth wind sensor from the device)	
4	FOR EACH value, N, from 1 to Num_Pressure_Sensors, perform Steps 4.1 through 4.5.	
4.1	Determine a random value from -1000 to 1001. RECORD this information as: »Sensor_Height_Random.N	
4.2	Determine a random value from -90000000 to 90000001. RECORD this information as: »Sensor_Latitude_Random.N	
4.3	Determine a random value from -180000000 to 180000001. RECORD this information as: »Sensor_Longitude_Random.N	
4.4	Determine a random display string from 1 to 255 characters in length. RECORD this information as: »Sensor_Location_Random.N	
4.5	SET the following object(s) to the value(s) shown: »windSensorHeight.N = Sensor_Height_Random.N »windSensorLatitude.N = Sensor_Latitude_Random.N »windSensorLongitude.N = Sensor_Longitude_Random.N »windSensorLocation.N = Sensor_Location_Random.N	Pass / Fail (Clause 3.5.2.11.3)
5	FOR EACH value, N, from 1 to Num_Wind_Sensors, perform Steps 5.1 through 5.5.	
5.1	GET the following object(s): »windSensorHeight.N »windSensorLatitude.N »windSensorLongitude.N »windSensorLocation.N	Pass / Fail (Clause 3.5.2.1.11.3)

© 2022 AASHTO / ITE / NEMA Copy Per TRF Distribution Permission

5.2	VERIFY that the RESPONSE VALUE for windSensorHeight.N is equal to Sensor_Height_Random.N.	Pass / Fail (Clause 5.6.10.2)
5.3	VERIFY that the RESPONSE VALUE for windSensorLatitude.N is equal to Sensor_Latitude_Random.N.	Pass / Fail (Clause 5.6.10.11)
5.4	VERIFY that the RESPONSE VALUE for windSensorLongitude.N is equal to Sensor_Longitude_Random.N.	Pass / Fail (Clause 5.6.10.12)
5.5	VERIFY that the RESPONSE VALUE for windSensorLocation.N is equal to Sensor_Location_Random.N.	Pass / Fail (Clause 5.6.10.3)
6	FOR EACH value, N, from 1 to Num_Pressure_Sensors, perform Steps 6.1 through 6.1.	
6.1	SET the following object(s) to the value(s) shown: »windSensorHeight.N = Sensor_Height.N »windSensorLatitude.N = Sensor_Latitude.N »windSensorLongitude.N = Sensor_Longitude.N »windSensorLocation.N = Sensor_Location.N	Pass / Fail (Clause 3.5.2.11.3)
7	FOR EACH value, N, from 1 to Num_Wind_Sensors, perform Steps 7.1 through 7.5.	
7.1	GET the following object(s): »windSensorHeight.N »windSensorLatitude.N »windSensorLongitude.N »windSensorLocation.N	Pass / Fail (Clause 3.5.2.1.11.3)
7.2	VERIFY that the RESPONSE VALUE for windSensorHeight.N is equal to Sensor_Height.N.	Pass / Fail (Clause 5.6.10.2)
7.3	VERIFY that the RESPONSE VALUE for windSensorLatitude.N is equal to Sensor_Latitude.N.	Pass / Fail (Clause 5.6.10.11)
7.4	VERIFY that the RESPONSE VALUE for windSensorLongitude.N is equal to Sensor_Longitude.N.	Pass / Fail (Clause 5.6.10.12)
7.5	VERIFY that the RESPONSE VALUE for windSensorLocation.N is equal to Sensor_Location.N.	Pass / Fail (Clause 5.6.10.3)

Test Case Results		
Tested By:	***Date Tested:***	***Pass / Fail***
Test Case Notes:		

C.2.3.2.16 Retrieve Temperature Sensor Metadata - Location

Test Case: 2.16	***Title:***	*Retrieve Metadata for Each Temperature Sensor - Location*	
	Description:	*This test case verifies that the ESS allows a management station to determine the location and relative height of each temperature sensor*	
	Variables:	*Supported_Temperature_Sensors*	*(PRL 3.6.3)*
	Pass/Fail Criteria:	*The device under test (DUT) shall pass every verification step included within the Test Case in order to pass the Test Case.*	

© 2022 AASHTO / ITE / NEMA

Step	Test Procedure	Device
1	CONFIGURE: Determine the number of temperature sensors that the ESS is required to support.	
2	GET the following object(s): » essNumTemperatureSensors.0	Pass / Fail (Clause 3.5.2.1.12.1)
3	VERIFY that the RESPONSE VALUE for essNumTemperatureSensors.0 is greater than or equal to Supported_ Temperature _Sensors.	Pass / Fail (PRL 3.6.3)
4	Determine the RESPONSE VALUE for essNumTemperatureSensors.0. RECORD this information as: »Supported_Temperature_Sensors	
5	FOR EACH value, N, from 1 to Supported_Temperature_Sensors, perform Steps 5.1 through 5.12.	
5.1	GET the following object(s): »essTemperatureSensorHeight.N »essTemperatureSensorLatitude.N »essTemperatureSensorLongitude.N »essTemperatureSensorLocation.N	Pass / Fail (Clause 3.5.2.1.12.1)
5.2	VERIFY that the RESPONSE VALUE for essTemperatureSensorHeight.N is greater than or equal to -1000.	Pass / Fail (Clause 5.7.3.2)
5.3	VERIFY that the RESPONSE VALUE for essTemperatureSensorHeight.N is less than or equal to 1001.	Pass / Fail (Clause 5.7.3.2)
5.4	VERIFY that the RESPONSE VALUE for essTemperatureSensorHeight.N is APPROPRIATE.	Pass / Fail (Clause 5.7.3.2)
5.5	VERIFY that the RESPONSE VALUE for essTemperatureSensorLatitude.N is greater than or equal to -90000000.	Pass / Fail (Clause 5.7.3.4)
5.6	VERIFY that the RESPONSE VALUE for essTemperatureSensorLatitude.N is less than or equal to 90000001.	Pass / Fail (Clause 5.7.3.4)
5.7	VERIFY that the RESPONSE VALUE for essTemperatureSensorLatitude.N is APPROPRIATE.	Pass / Fail (Clause 5.7.3.4)
5.8	VERIFY that the RESPONSE VALUE for essTemperatureSensorLongitude.N is greater than or equal to -180000000.	Pass / Fail (Clause 5.7.3.5)
5.9	VERIFY that the RESPONSE VALUE for essTemperatureSensorLongitude.N is less than or equal to 180000001.	Pass / Fail (Clause 5.7.3.5)
5.10	VERIFY that the RESPONSE VALUE for essTemperatureSensorLongitude.N is APPROPRIATE.	Pass / Fail (Clause 5.7.3.5)
5.11	VERIFY that the RESPONSE VALUE for essTemperatureSensorLocation.N is a valid DisplayString with no more than 255 characters.	Pass / Fail (Clause 5.7.3.6)
5.12	VERIFY that the RESPONSE VALUE for essTemperatureSensorLocation.N is APPROPRIATE.	Pass / Fail (Clause 5.7.3.6)

Test Case Results		
Tested By:	**Date Tested:**	**Pass / Fail**

© 2022 AASHTO / ITE / NEMA

Test Case Notes:

Copy Per TRF Distribution Permission
© 2022 AASHTO / ITE / NEMA

C.2.3.2.17 Retrieve Temperature Sensor Metadata – Sensor Information

Test Case: 2.17	***Title:***	*Retrieve Metadata for Each Temperature Sensor – Sensor Information*	
	Description:	*This test case verifies that the ESS allows a management station to determine the sensor information of each temperature sensor*	
	Variables:	*Supported_Temperature_Sensors*	*(PRL 3.6.3)*
	Pass/Fail Criteria:	*The device under test (DUT) shall pass every verification step included within the Test Case in order to pass the Test Case.*	

Step	***Test Procedure***	***Device***
1	CONFIGURE: Determine the number of temperature sensors that the ESS is required to support.	
2	GET the following object(s): » essNumTemperatureSensors.0	Pass / Fail (Clause 3.5.2.1.12.2)
3	VERIFY that the RESPONSE VALUE for essNumTemperatureSensors.0 is greater than or equal to Supported_Temperature_Sensors.	Pass / Fail (PRL 3.6.3)
4	Determine the RESPONSE VALUE for essNumTemperatureSensors.0. RECORD this information as: »Supported_Temperature_Sensors	
5	FOR EACH value, N, from 1 to Supported_Temperature_Sensors, perform Steps 5.1 through 5.4.	
5.1	GET the following object(s): »essTemperatureSensorModelInformation.N	Pass / Fail (Clause 3.5.2.1.12.2)
5.2	VERIFY that the RESPONSE VALUE for essTemperatureSensorModelInformation.N is greater than or equal to 0.	Pass / Fail (Clause 5.7.3.7)
5.3	VERIFY that the RESPONSE VALUE for essTemperatureSensorModelInformation.N is less than or equal to 255.	Pass / Fail (Clause 5.7.3.7)
5.4	VERIFY that the RESPONSE VALUE for essTemperatureSensorModelInformation.N is APPROPRIATE.	Pass / Fail (Clause 5.7.3.7)

Test Case Results		
Tested By:	***Date Tested:***	***Pass / Fail***
Test Case Notes:		

© 2022 AASHTO / ITE / NEMA

C.2.3.2.18 Configure Temperature Sensor Metadata - Location

Test Case: 2.18	***Title:***	*Configure Temperature Sensor Metadata – Location*
	Description:	*This test case verifies that the ESS allows a management station to store location and relative height information regarding temperature sensors.*
	Variables:	
	Pass/Fail Criteria:	*The device under test (DUT) shall pass every verification step included within the Test Case in order to pass the Test Case.*

Step	***Test Procedure***	***Device***
1	GET the following object(s): » essNumTemperatureSensors.0	Pass / Fail (Clause 3.5.2.1.12.3)
2	Determine the RESPONSE VALUE for essNumTemperatureSensors.0. RECORD this information as: »Num_Temperature_Sensors	
3	FOR EACH value, N, from 1 to Num_Temperature_Sensors, perform Steps 3.1 through 3.2.	
3.1	GET the following object(s): »essTemperatureSensorHeight.N »essTemperatureSensorLatitude.N »essTemperatureSensorLongitude.N »essTemperatureSensorLocation.N	Pass / Fail (Clause 3.5.2.1.12.3)
3.2	Determine the values for the retrieved information. RECORD this information as: »Sensor_Height[N] (the height of the Nth temperature sensor from the device) »Sensor_Latitude[N] (the latitude of the Nth temperature sensor from the device) »Sensor_Longitude[N] (the longitude of the Nth temperature sensor from the device) »Sensor_Location[N] (the location of the Nth temperature sensor from the device)	
4	FOR EACH value, N, from 1 to Num_Pressure_Sensors, perform Steps 4.1 through 4.5.	
4.1	Determine a random value from -1000 to 1001. RECORD this information as: »Sensor_Height_Random.N	
4.2	Determine a random value from -90000000 to 90000001. RECORD this information as: »Sensor_Latitude_Random.N	
4.3	Determine a random value from -180000000 to 180000001. RECORD this information as: »Sensor_Longitude_Random.N	
4.4	Determine a random display string from 1 to 255 characters in length. RECORD this information as: »Sensor_Location_Random.N	
4.5	SET the following object(s) to the value(s) shown: »essTemperatureSensorHeight.N = Sensor_Height_Random.N »essTemperatureSensorLatitude.N = Sensor_Latitude_Random.N »essTemperatureSensorLongitude.N = Sensor_Longitude_Random.N »essTemperatureSensorLocation.N = Sensor_Location_Random.N	Pass / Fail (Clause 3.5.2.12.3)
5	FOR EACH value, N, from 1 to Num_Temperature_Sensors, perform Steps 5.1 through 5.5.	
5.1	GET the following object(s): »essTemperatureSensorHeight.N »essTemperatureSensorLatitude.N	Pass / Fail (Clause 3.5.2.1.12.3)

Copy Per TRF Distribution Permission © 2022 AASHTO / ITE / NEMA

	»essTemperatureSensorLongitude.N »essTemperatureSensorLocation.N	
5.2	VERIFY that the RESPONSE VALUE for essTemperatureSensorHeight.N is equal to Sensor_Height_Random.N.	Pass / Fail (Clause 5.7.3.2)
5.3	VERIFY that the RESPONSE VALUE for essTemperatureSensorLatitude.N is equal to Sensor_Latitude_Random.N.	Pass / Fail (Clause 5.7.3.4)
5.4	VERIFY that the RESPONSE VALUE for essTemperatureSensorLongitude.N is equal to Sensor_Longitude_Random.N.	Pass / Fail (Clause 5.7.3.5)
5.5	VERIFY that the RESPONSE VALUE for essTemperatureSensorLocation.N is equal to Sensor_Location_Random.N.	Pass / Fail (Clause 5.7.3.6)
6	FOR EACH value, N, from 1 to Num_Pressure_Sensors, perform Steps 6.1 through 6.1.	
6.1	SET the following object(s) to the value(s) shown: »essTemperatureSensorHeight.N = Sensor_Height.N »essTemperatureSensorLatitude.N = Sensor_Latitude.N »essTemperatureSensorLongitude.N = Sensor_Longitude.N »essTemperatureSensorLocation.N = Sensor_Location.N	Pass / Fail (Clause 3.5.2.12.3)
7	FOR EACH value, N, from 1 to Num_Temperature_Sensors, perform Steps 7.1 through 7.5.	
7.1	GET the following object(s): »essTemperatureSensorHeight.N »essTemperatureSensorLatitude.N »essTemperatureSensorLongitude.N »essTemperatureSensorLocation.N	Pass / Fail (Clause 3.5.2.1.12.3)
7.2	VERIFY that the RESPONSE VALUE for essTemperatureSensorHeight.N is equal to Sensor_Height.N.	Pass / Fail (Clause 5.7.3.2)
7.3	VERIFY that the RESPONSE VALUE for essTemperatureSensorLatitude.N is equal to Sensor_Latitude.N.	Pass / Fail (Clause 5.7.3.4)
7.4	VERIFY that the RESPONSE VALUE for essTemperatureSensorLongitude.N is equal to Sensor_Longitude.N.	Pass / Fail (Clause 5.7.3.5)
7.5	VERIFY that the RESPONSE VALUE for essTemperatureSensorLocation.N is equal to Sensor_Location.N.	Pass / Fail (Clause 5.7.3.6)

Test Case Results

Tested By:	***Date Tested:***	***Pass / Fail***

Test Case Notes:

© 2022 AASHTO / ITE / NEMA

C.2.3.2.19 Retrieve Humidity Sensor Metadata - Location

Test Case: 2.19	***Title:***	*Retrieve Metadata for Each Humidity Sensor - Location*	
	Description:	*This test case verifies that the ESS allows a management station to determine the location and relative height of each humidity sensor*	
	Variables:	*Supported_Humidity_Sensors*	*(PRL 3.6.4)*
	Pass/Fail Criteria:	*The device under test (DUT) shall pass every verification step included within the Test Case in order to pass the Test Case.*	

Step	***Test Procedure***	***Device***
1	CONFIGURE: Determine the number of humidity sensors that the ESS is required to support.	
2	GET the following object(s): » humiditySensorTableNumSensors.0	Pass / Fail (Clause 3.5.2.1.13.1)
3	VERIFY that the RESPONSE VALUE for humiditySensorTableNumSensors.0 is greater than or equal to Supported_Humidity_Sensors.	Pass / Fail (PRL 3.6.4)
4	Determine the RESPONSE VALUE for humiditySensorTableNumSensors.0. RECORD this information as: »Supported_Humidity_Sensors	
5	FOR EACH value, N, from 1 to Supported_Humidity_Sensors, perform Steps 5.1 through 5.12.	
5.1	GET the following object(s): »humiditySensorHeight.N »humiditySensorLatitude.N »humiditySensorLongitude.N »humiditySensorLocation.N	Pass / Fail (Clause 3.5.2.1.13.1)
5.2	VERIFY that the RESPONSE VALUE for humiditySensorHeight.N is greater than or equal to -1000.	Pass / Fail (Clause 5.8.27.2)
5.3	VERIFY that the RESPONSE VALUE for humiditySensorHeight.N is less than or equal to 1001.	Pass / Fail (Clause 5.8.27.2)
5.4	VERIFY that the RESPONSE VALUE for humiditySensorHeight.N is APPROPRIATE.	Pass / Fail (Clause 5.8.27.2)
5.5	VERIFY that the RESPONSE VALUE for humiditySensorLatitude.N is greater than or equal to -90000000.	Pass / Fail (Clause 5.8.27.3)
5.6	VERIFY that the RESPONSE VALUE for humiditySensorLatitude.N is less than or equal to 90000001.	Pass / Fail (Clause 5.8.27.3)
5.7	VERIFY that the RESPONSE VALUE for humiditySensorLatitude.N is APPROPRIATE.	Pass / Fail (Clause 5.8.27.3)
5.8	VERIFY that the RESPONSE VALUE for humiditySensorLongitude.N is greater than or equal to -180000000.	Pass / Fail (Clause 5.8.27.4)
5.9	VERIFY that the RESPONSE VALUE for humiditySensorLongitude.N is less than or equal to 180000001.	Pass / Fail (Clause 5.8.27.4)
5.10	VERIFY that the RESPONSE VALUE for humiditySensorLongitude.N is APPROPRIATE.	Pass / Fail (Clause 5.8.27.4)

Copy Per TRF Distribution Permission © 2022 AASHTO / ITE / NEMA

5.11	VERIFY that the RESPONSE VALUE for humiditySensorLocation.N is a valid DisplayString with no more than 255 characters.	Pass / Fail (Clause 5.8.27.5)
5.12	VERIFY that the RESPONSE VALUE for humiditySensorLocation.N is APPROPRIATE.	Pass / Fail (Clause 5.8.27.5)

Test Case Results		
Tested By:	***Date Tested:***	***Pass / Fail***
Test Case Notes:		

© 2022 AASHTO / ITE / NEMA

C.2.3.2.20 Retrieve Humidity Sensor Metadata - Sensor Information

Test Case: 2.20	***Title:***	*Retrieve Metadata for Each Humidity Sensor - Sensor Information*	
	Description:	*This test case verifies that the ESS allows a management station to determine the sensor information of each humidity sensor*	
	Variables:	*Supported_Humidity_Sensors*	*(PRL 3.6.4)*
	Pass/Fail Criteria:	*The device under test (DUT) shall pass every verification step included within the Test Case in order to pass the Test Case.*	

Step	***Test Procedure***	***Device***
1	CONFIGURE: Determine the number of humidity sensors that the ESS is required to support.	
2	GET the following object(s): » humiditySensorTableNumSensors.0	Pass / Fail (Clause 3.5.2.1.13.2)
3	VERIFY that the RESPONSE VALUE for humiditySensorTableNumSensors.0 is greater than or equal to Supported_Humidity_Sensors.	Pass / Fail (PRL 3.6.4)
4	Determine the RESPONSE VALUE for humiditySensorTableNumSensors.0. RECORD this information as: »Supported_Humidity_Sensors	
5	FOR EACH value, N, from 1 to Supported_Humidity_Sensors, perform Steps 5.1 through 5.4.	
5.1	GET the following object(s): »humiditySensorModelInformation.N	Pass / Fail (Clause 3.5.2.1.13.2)
5.2	VERIFY that the RESPONSE VALUE for humiditySensorModelInformation.N is greater than or equal to 0.	Pass / Fail (Clause 5.8.27.6)
5.3	VERIFY that the RESPONSE VALUE for humiditySensorModelInformation.N is less than or equal to 255.	Pass / Fail (Clause 5.8.27.6)
5.4	VERIFY that the RESPONSE VALUE for humiditySensorModelInformation.N is APPROPRIATE.	Pass / Fail (Clause 5.8.27.6)

Test Case Results		
Tested By:	***Date Tested:***	***Pass / Fail***
Test Case Notes:		

© 2022 AASHTO / ITE / NEMA

C.2.3.2.21 Configure Humidity Sensor Metadata - Location

Test Case: 2.21	***Title:***	*Configure Humidity Sensor Metadata – Location*
	Description:	*This test case verifies that the ESS allows a management station to store location and relative height information regarding humidity sensors.*
	Variables:	
	Pass/Fail Criteria:	*The device under test (DUT) shall pass every verification step included within the Test Case in order to pass the Test Case.*

Step	***Test Procedure***	***Device***
1	GET the following object(s): » humiditySensorTableNumSensors.0	Pass / Fail (Clause 3.5.2.1.13.3)
2	Determine the RESPONSE VALUE for humiditySensorTableNumSensors.0. RECORD this information as: »Num_Humidity_Sensors	
3	FOR EACH value, N, from 1 to Num_Humidity_Sensors, perform Steps 3.1 through 3.2.	
3.1	GET the following object(s): »humiditySensorHeight.N »humiditySensorLatitude.N »humiditySensorLongitude.N »humiditySensorLocation.N	Pass / Fail (Clause 3.5.2.1.13.3)
3.2	Determine the values for the retrieved information. RECORD this information as: »Sensor_Height[N] (the height of the Nth humidity sensor from the device) »Sensor_Latitude[N] (the latitude of the Nth humidity sensor from the device) »Sensor_Longitude[N] (the longitude of the Nth humidity sensor from the device) »Sensor_Location[N] (the location of the Nth humidity sensor from the device)	
4	FOR EACH value, N, from 1 to Num_Pressure_Sensors, perform Steps 4.1 through 4.5.	
4.1	Determine a random value from -1000 to 1001. RECORD this information as: »Sensor_Height_Random.N	
4.2	Determine a random value from -90000000 to 90000001. RECORD this information as: »Sensor_Latitude_Random.N	
4.3	Determine a random value from -180000000 to 180000001. RECORD this information as: »Sensor_Longitude_Random.N	
4.4	Determine a random display string from 1 to 255 characters in length. RECORD this information as: »Sensor_Location_Random.N	
4.5	SET the following object(s) to the value(s) shown: »humiditySensorHeight.N = Sensor_Height_Random.N »humiditySensorLatitude.N = Sensor_Latitude_Random.N »humiditySensorLongitude.N = Sensor_Longitude_Random.N »humiditySensorLocation.N = Sensor_Location_Random.N	Pass / Fail (Clause 3.5.2.13.3)
5	FOR EACH value, N, from 1 to Num_Humidity_Sensors, perform Steps 5.1 through 5.5.	
5.1	GET the following object(s): »humiditySensorHeight.N »humiditySensorLatitude.N »humiditySensorLongitude.N »humiditySensorLocation.N	Pass / Fail (Clause 3.5.2.1.13.3)

© 2022 AASHTO / ITE / NEMA

5.2	VERIFY that the RESPONSE VALUE for humiditySensorHeight.N is equal to Sensor_Height_Random.N.	Pass / Fail (Clause 5.8.27.2)
5.3	VERIFY that the RESPONSE VALUE for humiditySensorLatitude.N is equal to Sensor_Latitude_Random.N.	Pass / Fail (Clause 5.8.27.3)
5.4	VERIFY that the RESPONSE VALUE for humiditySensorLongitude.N is equal to Sensor_Longitude_Random.N.	Pass / Fail (Clause 5.8.27.4)
5.5	VERIFY that the RESPONSE VALUE for humiditySensorLocation.N is equal to Sensor_Location_Random.N.	Pass / Fail (Clause 5.8.27.5)
6	FOR EACH value, N, from 1 to Num_Pressure_Sensors, perform Steps 6.1 through 6.1.	
6.1	SET the following object(s) to the value(s) shown: »humiditySensorHeight.N = Sensor_Height.N »humiditySensorLatitude.N = Sensor_Latitude.N »humiditySensorLongitude.N = Sensor_Longitude.N »humiditySensorLocation.N = Sensor_Location.N	Pass / Fail (Clause 3.5.2.13.3)
7	FOR EACH value, N, from 1 to Num_Humidity_Sensors, perform Steps 7.1 through 7.5.	
7.1	GET the following object(s): »humiditySensorHeight.N »humiditySensorLatitude.N »humiditySensorLongitude.N »humiditySensorLocation.N	Pass / Fail (Clause 3.5.2.1.13.3)
7.2	VERIFY that the RESPONSE VALUE for humiditySensorHeight.N is equal to Sensor_Height.N.	Pass / Fail (Clause 5.8.27.2)
7.3	VERIFY that the RESPONSE VALUE for humiditySensorLatitude.N is equal to Sensor_Latitude.N.	Pass / Fail (Clause 5.8.27.3)
7.4	VERIFY that the RESPONSE VALUE for humiditySensorLongitude.N is equal to Sensor_Longitude.N.	Pass / Fail (Clause 5.8.27.4)
7.5	VERIFY that the RESPONSE VALUE for humiditySensorLocation.N is equal to Sensor_Location.N.	Pass / Fail (Clause 5.8.27.5)

Test Case Results		
Tested By:	***Date Tested:***	***Pass / Fail***
Test Case Notes:		

© 2022 AASHTO / ITE / NEMA

C.2.3.2.22 Retrieve Precipitation Sensor Metadata – Location

Test Case: 2.22	***Title:***	*Retrieve Metadata for Each Precipitation Sensor - Location*	
	Description:	*This test case verifies that the ESS allows a management station to determine the location and relative height of each precipitation sensor*	
	Variables:	*Supported_Precipitation_Sensors*	*(PRL 3.6.5)*
	Pass/Fail Criteria:	*The device under test (DUT) shall pass every verification step included within the Test Case in order to pass the Test Case.*	

Step	***Test Procedure***	***Device***
1	CONFIGURE: Determine the number of precipitation sensors that the ESS is required to support.	
2	GET the following object(s): » precipitationSensorTableNumSensors.0	Pass / Fail (Clause 3.5.2.1.14.1)
3	VERIFY that the RESPONSE VALUE for precipitationSensorTableNumSensors.0 is greater than or equal to Supported_Precipitation_Sensors.	Pass / Fail (PRL 3.6.5)
4	Determine the RESPONSE VALUE for precipitationSensorTableNumSensors.0. RECORD this information as: »Supported_Precipitation_Sensors	
5	FOR EACH value, N, from 1 to Supported_Precipitation_Sensors, perform Steps 5.1 through 5.12.	
5.1	GET the following object(s): »precipitationSensorHeight.N »precipitationSensorLatitude.N »precipitationSensorLongitude.N »precipitationSensorLocation.N	Pass / Fail (Clause 3.5.2.1.14.1)
5.2	VERIFY that the RESPONSE VALUE for precipitationSensorHeight.N is greater than or equal to -1000.	Pass / Fail (Clause 5.8.24.2)
5.3	VERIFY that the RESPONSE VALUE for precipitationSensorHeight.N is less than or equal to 1001.	Pass / Fail (Clause 5.8.24.2)
5.4	VERIFY that the RESPONSE VALUE for precipitationSensorHeight.N is APPROPRIATE.	Pass / Fail (Clause 5.8.24.2)
5.5	VERIFY that the RESPONSE VALUE for precipitationSensorLatitude.N is greater than or equal to -90000000.	Pass / Fail (Clause 5.8.24.3)
5.6	VERIFY that the RESPONSE VALUE for precipitationSensorLatitude.N is less than or equal to 90000001.	Pass / Fail (Clause 5.8.24.3)
5.7	VERIFY that the RESPONSE VALUE for precipitationSensorLatitude.N is APPROPRIATE.	Pass / Fail (Clause 5.8.24.3)
5.8	VERIFY that the RESPONSE VALUE for precipitationSensorLongitude.N is greater than or equal to -180000000.	Pass / Fail (Clause 5.8.24.4)
5.9	VERIFY that the RESPONSE VALUE for precipitationSensorLongitude.N is less than or equal to 180000001.	Pass / Fail (Clause 5.8.24.4)
5.10	VERIFY that the RESPONSE VALUE for precipitationSensorLongitude.N is APPROPRIATE.	Pass / Fail (Clause 5.8.24.4)

© 2022 AASHTO / ITE / NEMA Copy Per TRF Distribution Permission

5.11	VERIFY that the RESPONSE VALUE for precipitationSensorLocation.N is a valid DisplayString with no more than 255 characters.	Pass / Fail (Clause 5.8.24.5)
5.12	VERIFY that the RESPONSE VALUE for precipitationSensorLocation.N is APPROPRIATE.	Pass / Fail (Clause 5.8.24.5)

Test Case Results		
Tested By:	***Date Tested:***	***Pass / Fail***
Test Case Notes:		

© 2022 AASHTO / ITE / NEMA

C.2.3.2.23 Retrieve Precipitation Sensor Metadata - Sensor Information

Test Case: 2.23	***Title:***	*Retrieve Metadata for Each Precipitation Sensor - Sensor Information*	
	Description:	*This test case verifies that the ESS allows a management station to determine the sensor information of each precipitation sensor*	
	Variables:	*Supported_Precipitation_Sensors*	*(PRL 3.6.5)*
	Pass/Fail Criteria:	*The device under test (DUT) shall pass every verification step included within the Test Case in order to pass the Test Case.*	

Step	***Test Procedure***	***Device***
1	CONFIGURE: Determine the number of precipitation sensors that the ESS is required to support.	
2	GET the following object(s): » precipitationSensorTableNumSensors.0	Pass / Fail (Clause 3.5.2.1.14.2)
3	VERIFY that the RESPONSE VALUE for precipitationSensorTableNumSensors.0 is greater than or equal to Supported_Precipitation_Sensors.	Pass / Fail (PRL 3.6.5)
4	Determine the RESPONSE VALUE for precipitationSensorTableNumSensors.0. RECORD this information as: »Supported_Precipitation_Sensors	
5	FOR EACH value, N, from 1 to Supported_Precipitation_Sensors, perform Steps 5.1 through 5.4.	
5.1	GET the following object(s): »precipitationSensorModelInformation.N	Pass / Fail (Clause 3.5.2.1.14.2)
5.2	VERIFY that the RESPONSE VALUE for precipitationSensorModelInformationV4.N is greater than or equal to 0.	Pass / Fail (Clause 5.8.24.6)
5.3	VERIFY that the RESPONSE VALUE for precipitationSensorModelInformationV4.N is less than or equal to 255.	Pass / Fail (Clause 5.8.24.6)
5.4	VERIFY that the RESPONSE VALUE for precipitationSensorModelInformationV4.N is APPROPRIATE.	Pass / Fail (Clause 5.8.24.6)

Test Case Results		
Tested By:	***Date Tested:***	***Pass / Fail***
Test Case Notes:		

© 2022 AASHTO / ITE / NEMA

C.2.3.2.24 Configure Precipitation Sensor Metadata - Location

Test Case: 2.24	***Title:***	*Configure Precipitation Sensor Metadata - Location*
	Description:	*This test case verifies that the ESS allows a management station to store location and relative height information regarding precipitation sensors.*
	Variables:	
	Pass/Fail Criteria:	*The device under test (DUT) shall pass every verification step included within the Test Case in order to pass the Test Case.*

Step	***Test Procedure***	***Device***
1	GET the following object(s): » precipitationSensorTableNumSensors.0	Pass / Fail (Clause 3.5.2.1.14.3)
2	Determine the RESPONSE VALUE for precipitationSensorTableNumSensors.0. RECORD this information as: »Num_Precipitation_Sensors	
3	FOR EACH value, N, from 1 to Num_Precipitation_Sensors, perform Steps 3.1 through 3.2.	
3.1	GET the following object(s): »precipitationSensorHeight.N »precipitationSensorLatitude.N »precipitationSensorLongitude.N »precipitationSensorLocation.N	Pass / Fail (Clause 3.5.2.1.14.3)
3.2	Determine the values for the retrieved information. RECORD this information as: »Sensor_Height[N] (the height of the Nth precipitation sensor from the device) »Sensor_Latitude[N] (the latitude of the Nth precipitation sensor from the device) »Sensor_Longitude[N] (the longitude of the Nth precipitation sensor from the device) »Sensor_Location[N] (the location of the Nth precipitation sensor from the device)	
4	FOR EACH value, N, from 1 to Num_Pressure_Sensors, perform Steps 4.1 through 4.5.	
4.1	Determine a random value from -1000 to 1001. RECORD this information as: »Sensor_Height_Random.N	
4.2	Determine a random value from -90000000 to 90000001. RECORD this information as: »Sensor_Latitude_Random.N	
4.3	Determine a random value from -180000000 to 180000001. RECORD this information as: »Sensor_Longitude_Random.N	
4.4	Determine a random display string from 1 to 255 characters in length. RECORD this information as: »Sensor_Location_Random.N	
4.5	SET the following object(s) to the value(s) shown: »precipitationSensorHeight.N = Sensor_Height_Random.N »precipitationSensorLatitude.N = Sensor_Latitude_Random.N »precipitationSensorLongitude.N = Sensor_Longitude_Random.N »precipitationSensorLocation.N = Sensor_Location_Random.N	Pass / Fail (Clause 3.5.2.14.3)
5	FOR EACH value, N, from 1 to Num_Precipitation_Sensors, perform Steps 5.1 through 5.5.	
5.1	GET the following object(s): »precipitationSensorHeight.N »precipitationSensorLatitude.N	Pass / Fail (Clause 3.5.2.1.14.3)

Copy Per TRF Distribution Permission © 2022 AASHTO / ITE / NEMA

	»precipitationSensorLongitude.N »precipitationSensorLocation.N	
5.2	VERIFY that the RESPONSE VALUE for precipitationSensorHeight.N is equal to Sensor_Height_Random.N.	Pass / Fail (Clause 5.8.24.2)
5.3	VERIFY that the RESPONSE VALUE for precipitationSensorLatitude.N is equal to Sensor_Latitude_Random.N.	Pass / Fail (Clause 5.8.24.3)
5.4	VERIFY that the RESPONSE VALUE for precipitationSensorLongitude.N is equal to Sensor_Longitude_Random.N.	Pass / Fail (Clause 5.8.24.4)
5.5	VERIFY that the RESPONSE VALUE for precipitationSensorLocation.N is equal to Sensor_Location_Random.N.	Pass / Fail (Clause 5.8.24.5)
6	FOR EACH value, N, from 1 to Num_Pressure_Sensors, perform Steps 6.1 through 6.1.	
6.1	SET the following object(s) to the value(s) shown: »precipitationSensorHeight.N = Sensor_Height.N »precipitationSensorLatitude.N = Sensor_Latitude.N »precipitationSensorLongitude.N = Sensor_Longitude.N »precipitationSensorLocation.N = Sensor_Location.N	Pass / Fail (Clause 3.5.2.14.3)
7	FOR EACH value, N, from 1 to Num_Precipitation_Sensors, perform Steps 7.1 through 7.5.	
7.1	GET the following object(s): »precipitationSensorHeight.N »precipitationSensorLatitude.N »precipitationSensorLongitude.N »precipitationSensorLocation.N	Pass / Fail (Clause 3.5.2.1.14.3)
7.2	VERIFY that the RESPONSE VALUE for precipitationSensorHeight.N is equal to Sensor_Height.N.	Pass / Fail (Clause 5.8.24.2)
7.3	VERIFY that the RESPONSE VALUE for precipitationSensorLatitude.N is equal to Sensor_Latitude.N.	Pass / Fail (Clause 5.8.24.3)
7.4	VERIFY that the RESPONSE VALUE for precipitationSensorLongitude.N is equal to Sensor_Longitude.N.	Pass / Fail (Clause 5.8.24.4)
7.5	VERIFY that the RESPONSE VALUE for precipitationSensorLocation.N is equal to Sensor_Location.N.	Pass / Fail (Clause 5.8.24.5)

Test Case Results		
Tested By:	***Date Tested:***	***Pass / Fail***
Test Case Notes:		

© 2022 AASHTO / ITE / NEMA

C.2.3.2.25 Configure Precipitation Sensor Total User Specified Period

Test Case: 2.25	***Title:***	*Configure Precipitation Sensor Total User Specified Period*
	Description:	*This test case verifies that the ESS allows a management station to store total user specified period regarding precipitation sensors.*
	Variables:	
	Pass/Fail Criteria:	*The device under test (DUT) shall pass every verification step included within the Test Case in order to pass the Test Case.*

Step	***Test Procedure***	***Device***
1	GET the following object(s): » precipitationSensorTableNumSensors.0	Pass / Fail (Clause 3.5.2.1.14.4)
2	Determine the RESPONSE VALUE for precipitationSensorTableNumSensors.0. RECORD this information as: »Num_Precipitation_Sensors	
3	FOR EACH value, N, from 1 to Num_Precipitation_Sensors, perform Steps 3.1 through 3.2.	
3.1	GET the following object(s): »precipitationSensorPeriod.N	Pass / Fail (Clause 3.5.2.1.14.4)
3.2	Determine the values for the retrieved information. RECORD this information as: »Total_Precipitation_Period[N] (the total precipitation period of the Nth precipitation sensor from the device)	
4	FOR EACH value, N, from 1 to Num_Precipitation_Sensors, perform Steps 4.1 through 4.2.	
4.1	Determine a random value from 0 to 86,400. RECORD this information as: »Total_Precipitation_Period_Random.N	
4.2	SET the following object(s) to the value(s) shown: » precipitationSensorPeriod.N = Total_Precipitation_Period_Random.N	Pass / Fail (Clause 3.5.2.1.14.4)
5	FOR EACH value, N, from 1 to Num_Precipitation_Sensors, perform Steps 5.1 through 5.2.	
5.1	GET the following object(s): » precipitationSensorPeriod.N	Pass / Fail (Clause 3.5.2.1.14.4)
5.2	VERIFY that the RESPONSE VALUE for precipitationSensorPeriod.N is equal to Total_Precipitation_Period_Random.N.	Pass / Fail (Clause 5.8.24.7)
6	FOR EACH value, N, from 1 to Num_Precipitation_Sensors, perform Steps 6.1 through 6.1.	
6.1	SET the following object(s) to the value(s) shown: » precipitationSensorPeriod.N = Total_Precipitation_Period.N	Pass / Fail (Clause 3.5.2.1.14.4)
7	FOR EACH value, N, from 1 to Num_Precipitation_Sensors, perform Steps 7.1 through 7.2.	
7.1	GET the following object(s): » precipitationSensorPeriod.N	Pass / Fail (Clause 3.5.2.1.14.4)
7.2	VERIFY that the RESPONSE VALUE for precipitationSensorPeriod.N is equal to Total_Precipitation_Period.N.	Pass / Fail (Clause 5.8.24.7)

Copy Per TRF Distribution Permission © 2022 AASHTO / ITE / NEMA

Test Case Results		
Tested By:	***Date Tested:***	***Pass / Fail***
Test Case Notes:		

© 2022 AASHTO / ITE / NEMA
Copy Per TRF Distribution Permission

C.2.3.2.26 Retrieve Solar Radiation Sensor Metadata - Location

Test Case: 2.26	***Title:***	*Retrieve Metadata for Each Solar Radiation Sensor - Location*
	Description:	*This test case verifies that the ESS allows a management station to determine the location and relative height of each solar radiation sensor*
	Variables:	*Supported_Solar_Radiation_Sensors* *(PRL 3.6.6)*
	Pass/Fail Criteria:	*The device under test (DUT) shall pass every verification step included within the Test Case in order to pass the Test Case.*

Step	***Test Procedure***	***Device***
1	CONFIGURE: Determine the number of solar radiation sensors that the ESS is required to support.	
2	GET the following object(s): » radiationSensorTableNumSensors.0	Pass / Fail (Clause 3.5.2.1.15.1)
3	VERIFY that the RESPONSE VALUE for raditationSensorTableNumSensors.0 is greater than or equal to Supported_Radiation_Sensors.	Pass / Fail (PRL 3.6.6)
4	Determine the RESPONSE VALUE for radiationSensorTableNumSensors.0. RECORD this information as: »Supported_Solar_Radiation_Sensors	
5	FOR EACH value, N, from 1 to Supported_Radiation_Sensors, perform Steps 5.1 through 5.12.	
5.1	GET the following object(s): »radiationSensorHeight.N »radiationSensorLatitude.N »radiationSensorLongitude.N »radiationSensorLocation.N	Pass / Fail (Clause 3.5.2.1.15.1)
5.2	VERIFY that the RESPONSE VALUE for radiationSensorHeight.N is greater than or equal to -1000.	Pass / Fail (Clause 5.9.10.2)
5.3	VERIFY that the RESPONSE VALUE for radiationSensorHeight.N is less than or equal to 1001.	Pass / Fail (Clause 5.9.10.2)
5.4	VERIFY that the RESPONSE VALUE for radiationSensorHeight.N is APPROPRIATE.	Pass / Fail (Clause 5.9.10.2)
5.5	VERIFY that the RESPONSE VALUE for radiationSensorLatitude.N is greater than or equal to -90000000.	Pass / Fail (Clause 5.9.10.3)
5.6	VERIFY that the RESPONSE VALUE for radiationSensorLatitude.N is less than or equal to 90000001.	Pass / Fail (Clause 5.9.10.3)
5.7	VERIFY that the RESPONSE VALUE for radiationSensorLatitude.N is APPROPRIATE.	Pass / Fail (Clause 5.9.10.3)
5.8	VERIFY that the RESPONSE VALUE for radiationSensorLongitude.N is greater than or equal to -180000000.	Pass / Fail (Clause 5.9.10.4)
5.9	VERIFY that the RESPONSE VALUE for radiationSensorLongitude.N is less than or equal to 180000001.	Pass / Fail (Clause 5.9.10.4)
5.10	VERIFY that the RESPONSE VALUE for radiationSensorLongitude.N is APPROPRIATE.	Pass / Fail (Clause 5.9.10.4)

Copy Per TRF Distribution Permission © 2022 AASHTO / ITE / NEMA

5.11	VERIFY that the RESPONSE VALUE for radiationSensorLocation.N is a valid DisplayString with no more than 255 characters.	Pass / Fail (Clause 5.9.10.5)
5.12	VERIFY that the RESPONSE VALUE for radiationSensorLocation.N is APPROPRIATE.	Pass / Fail (Clause 5.9.10.5)

Test Case Results		
Tested By:	***Date Tested:***	***Pass / Fail***
Test Case Notes:		

© 2022 AASHTO / ITE / NEMA

C.2.3.2.27 Retrieve Solar Radiation Sensor Metadata - Sensor Information

Test Case: 2.27	***Title:***	*Retrieve Metadata for Each Solar Radiation Sensor - Sensor Information*
	Description:	*This test case verifies that the ESS allows a management station to determine the sensor information of each solar radiation sensor*
	Variables:	*Supported_Solar_Radiation_Sensors* *(PRL 3.6.6)*
	Pass/Fail Criteria:	*The device under test (DUT) shall pass every verification step included within the Test Case in order to pass the Test Case.*

Step	***Test Procedure***	***Device***
1	CONFIGURE: Determine the number of solar radiation sensors that the ESS is required to support.	
2	GET the following object(s): » radiationSensorTableNumSensors.0	Pass / Fail (Clause 3.5.2.1.15.2)
3	VERIFY that the RESPONSE VALUE for radiationSensorTableNumSensors.0 is greater than or equal to Supported_Radiation_Sensors.	Pass / Fail (PRL 3.6.6)
4	Determine the RESPONSE VALUE for radiationSensorTableNumSensors.0. RECORD this information as: »Supported_Radiation_Sensors	
5	FOR EACH value, N, from 1 to Supported_Radiation_Sensors, perform Steps 5.1 through 5.4.	
5.1	GET the following object(s): »radiationSensorModelInformation.N	Pass / Fail (Clause 3.5.2.1.15.2)
5.2	VERIFY that the RESPONSE VALUE for radiationSensorModelInformation.N is greater than or equal to 0.	Pass / Fail (Clause 5.9.10.6)
5.3	VERIFY that the RESPONSE VALUE for radiationSensorModelInformation.N is less than or equal to 255.	Pass / Fail (Clause 5.9.10.6)
5.4	VERIFY that the RESPONSE VALUE for radiationSensorModelInformation.N is APPROPRIATE.	Pass / Fail (Clause 5.9.10.6)

Test Case Results		
Tested By:	***Date Tested:***	***Pass / Fail***
Test Case Notes:		

© 2022 AASHTO / ITE / NEMA

C.2.3.2.28 Configure Solar Radiation Sensor Metadata - Location

Test Case: 2.28	***Title:***	*Configure Solar Radiation Sensor Metadata – Location*
	Description:	*This test case verifies that the ESS allows a management station to store location and relative height information regarding solar radiation sensors.*
	Variables:	
	Pass/Fail Criteria:	*The device under test (DUT) shall pass every verification step included within the Test Case in order to pass the Test Case.*

Step	***Test Procedure***	***Device***
1	GET the following object(s): » radiationSensorTableNumSensors.0	Pass / Fail (Clause 3.5.2.1.15.3)
2	Determine the RESPONSE VALUE for radiationSensorTableNumSensors.0. RECORD this information as: »Num_Solar_Radiation_Sensors	
3	FOR EACH value, N, from 1 to Num_Solar_Radiation_Sensors, perform Steps 3.1 through 3.2.	
3.1	GET the following object(s): »radiationSensorHeight.N »radiationSensorLatitude.N »radiationSensorLongitude.N »radiationSensorLocation.N	Pass / Fail (Clause 3.5.2.1.15.3)
3.2	Determine the values for the retrieved information. RECORD this information as: »Sensor_Height[N] (the height of the Nth radiation sensor from the device) »Sensor_Latitude[N] (the latitude of the Nth radiation sensor from the device) »Sensor_Longitude[N] (the longitude of the Nth radiation sensor from the device) »Sensor_Location[N] (the location of the Nth radiation sensor from the device)	
4	FOR EACH value, N, from 1 to Num_Pressure_Sensors, perform Steps 4.1 through 4.5.	
4.1	Determine a random value from -1000 to 1001. RECORD this information as: »Sensor_Height_Random.N	
4.2	Determine a random value from -90000000 to 90000001. RECORD this information as: »Sensor_Latitude_Random.N	
4.3	Determine a random value from -180000000 to 180000001. RECORD this information as: »Sensor_Longitude_Random.N	
4.4	Determine a random display string from 1 to 255 characters in length. RECORD this information as: »Sensor_Location_Random.N	
4.5	SET the following object(s) to the value(s) shown: »radiationSensorHeight.N = Sensor_Height_Random.N »radiationSensorLatitude.N = Sensor_Latitude_Random.N »radiationSensorLongitude.N = Sensor_Longitude_Random.N »radiationSensorLocation.N = Sensor_Location_Random.N	Pass / Fail (Clause 3.5.2.15.3)
5	FOR EACH value, N, from 1 to Num_Solar_Radiation_Sensors, perform Steps 5.1 through 5.5.	
5.1	GET the following object(s): »radiationSensorHeight.N »radiationSensorLatitude.N	Pass / Fail (Clause 3.5.2.1.15.3)

© 2022 AASHTO / ITE / NEMA

	»radiationSensorLongitude.N »radiationSensorLocation.N	
5.2	VERIFY that the RESPONSE VALUE for radiationSensorHeight.N is equal to Sensor_Height_Random.N.	Pass / Fail (Clause 5.9.10.2)
5.3	VERIFY that the RESPONSE VALUE for radiationSensorLatitude.N is equal to Sensor_Latitude_Random.N.	Pass / Fail (Clause 5.9.10.3)
5.4	VERIFY that the RESPONSE VALUE for radiationSensorLongitude.N is equal to Sensor_Longitude_Random.N.	Pass / Fail (Clause 5.9.10.4)
5.5	VERIFY that the RESPONSE VALUE for radiationSensorLocation.N is equal to Sensor_Location_Random.N.	Pass / Fail (Clause 5.9.10.5)
6	FOR EACH value, N, from 1 to Num_Pressure_Sensors, perform Steps 6.1 through 6.1.	
6.1	SET the following object(s) to the value(s) shown: »radiationSensorHeight.N = Sensor_Height.N »radiationSensorLatitude.N = Sensor_Latitude.N »radiationSensorLongitude.N = Sensor_Longitude.N »radiationSensorLocation.N = Sensor_Location.N	Pass / Fail (Clause 3.5.2.15.3)
7	FOR EACH value, N, from 1 to Num_Solar_Radiation_Sensors, perform Steps 7.1 through 7.5.	
7.1	GET the following object(s): »radiationSensorHeight.N »radiationSensorLatitude.N »radiationSensorLongitude.N »radiationSensorLocation.N	Pass / Fail (Clause 3.5.2.1.15.3)
7.2	VERIFY that the RESPONSE VALUE for radiationSensorHeight.N is equal to Sensor_Height.N.	Pass / Fail (Clause 5.9.10.2)
7.3	VERIFY that the RESPONSE VALUE for radiationSensorLatitude.N is equal to Sensor_Latitude.N.	Pass / Fail (Clause 5.9.10.3)
7.4	VERIFY that the RESPONSE VALUE for radiationSensorLongitude.N is equal to Sensor_Longitude.N.	Pass / Fail (Clause 5.9.10.4)
7.5	VERIFY that the RESPONSE VALUE for radiationSensorLocation.N is equal to Sensor_Location.N.	Pass / Fail (Clause 5.9.10.5)

Test Case Results		
Tested By:	***Date Tested:***	***Pass / Fail***
Test Case Notes:		

© 2022 AASHTO / ITE / NEMA

C.2.3.2.29 Retrieve Visibility Sensor Metadata - Location

Test Case: 2.29	***Title:***	*Retrieve Metadata for Each Visibility Sensor - Location*	
	Description:	*This test case verifies that the ESS allows a management station to determine the location and relative height of each visibility sensor*	
	Variables:	*Supported_Visibility_Sensors*	*(PRL 3.6.7)*
	Pass/Fail Criteria:	*The device under test (DUT) shall pass every verification step included within the Test Case in order to pass the Test Case.*	

Step	***Test Procedure***	***Device***
1	GET the following object(s): »visibilitySensorHeight »visibilitySensorLatitude »visibilitySensorLongitude »visibilitySensorLocation	Pass / Fail (Clause 3.5.2.1.16.1)
2	VERIFY that the RESPONSE VALUE for visibilitySensorHeight is greater than or equal to -1000.	Pass / Fail (Clause 5.10.3)
3	VERIFY that the RESPONSE VALUE for visibilitySensorHeight is less than or equal to 1001.	Pass / Fail (Clause 5.10.3)
4	VERIFY that the RESPONSE VALUE for visibilitySensorHeight is APPROPRIATE.	Pass / Fail (Clause 5.10.3)
5	VERIFY that the RESPONSE VALUE for visibilitySensorLatitude is greater than or equal to -90000000.	Pass / Fail (Clause 5.10.4)
6	VERIFY that the RESPONSE VALUE for visibilitySensorLatitude is less than or equal to 90000001.	Pass / Fail (Clause 5.10.4)
7	VERIFY that the RESPONSE VALUE for visibilitySensorLatitude is APPROPRIATE.	Pass / Fail (Clause 5.10.4)
8	VERIFY that the RESPONSE VALUE for visibilitySensorLongitude is greater than or equal to -180000000.	Pass / Fail (Clause 5.10.5)
9	VERIFY that the RESPONSE VALUE for visibilitySensorLongitude is less than or equal to 180000001.	Pass / Fail (Clause 5.10.5)
10	VERIFY that the RESPONSE VALUE for visibilitySensorLongitude is APPROPRIATE.	Pass / Fail (Clause 5.10.5)
11	VERIFY that the RESPONSE VALUE for visibilitySensorLocation is a valid DisplayString with no more than 255 characters.	Pass / Fail (Clause 5.10.6)
12	VERIFY that the RESPONSE VALUE for visibilitySensorLocation is APPROPRIATE.	Pass / Fail (Clause 5.10.6)

Test Case Results

Tested By:	***Date Tested:***	***Pass / Fail***

Test Case Notes:

© 2022 AASHTO / ITE / NEMA

C.2.3.2.30 Retrieve Visibility Sensor Metadata - Sensor Information

Test Case: 2.30	***Title:***	*Retrieve Metadata for Each Visibility Sensor - Sensor Information*	
	Description:	*This test case verifies that the ESS allows a management station to determine the sensor information of each visibility sensor*	
	Variables:	*Required_Visibility_Sensors*	*(PRL 3.6.7)*
	Pass/Fail Criteria:	*The device under test (DUT) shall pass every verification step included within the Test Case in order to pass the Test Case.*	

Step	***Test Procedure***	***Device***
1	CONFIGURE: Determine the number of visibility sensors that the ESS is required to support (PRL 3.6.7). RECORD this information as: »Required_Visibility_Sensors	
2	Determine the number of visibility sensors supported by the ESS. RECORD this value as: »Supported_Visibility_Sensors	
3	VERIFY that Supported_Visibility_Sensors is greater than or equal to Required_Visibility_Sensors. NOTE: NTCIP 1204 v04 does not report the number of visibility sensors supported by the ESS.	Pass / Fail (PRL 3.6.7)
4	GET the following object(s): »visibilitySensorModelInformation	Pass / Fail (Clause 3.5.2.1.16.2)
5	VERIFY that the RESPONSE VALUE for visibilitySensorModelInformation is greater than or equal to 0.	Pass / Fail (Clause 5.10.7)
6	VERIFY that the RESPONSE VALUE for visibilitySensorModelInformation is less than or equal to 255.	Pass / Fail (Clause 5.10.7)
7	VERIFY that the RESPONSE VALUE for visibilitySensorModelInformation is APPROPRIATE.	Pass / Fail (Clause 5.10.7)

Test Case Results

Tested By:	***Date Tested:***	***Pass / Fail***

Test Case Notes:

© 2022 AASHTO / ITE / NEMA

C.2.3.2.31 Configure Visibility Sensor Metadata - Location

Test Case: 2.31	***Title:***	*Configure Visibility Sensor Metadata – Location*
	Description:	*This test case verifies that the ESS allows a management station to store location and relative height information regarding visibility sensors.*
	Variables:	
	Pass/Fail Criteria:	*The device under test (DUT) shall pass every verification step included within the Test Case in order to pass the Test Case.*

Step	***Test Procedure***	***Device***
1	GET the following object(s): » visibilitySensorTableNumSensors.0	Pass / Fail (Clause 3.5.2.1.16.3)
2	Determine the RESPONSE VALUE for visibilitySensorTableNumSensors.0. RECORD this information as: »Num_Visibility_Sensors	
3	FOR EACH value, N, from 1 to Num_Visibility_Sensors, perform Steps 3.1 through 3.2.	
3.1	GET the following object(s): »visibilitySensorHeight.N »visibilitySensorLatitude.N »visibilitySensorLongitude.N »visibilitySensorLocation.N	Pass / Fail (Clause 3.5.2.1.16.3)
3.2	Determine the values for the retrieved information. RECORD this information as: »Sensor_Height[N] (the height of the Nth visibility sensor from the device) »Sensor_Latitude[N] (the latitude of the Nth visibility sensor from the device) »Sensor_Longitude[N] (the longitude of the Nth visibility sensor from the device) »Sensor_Location[N] (the location of the Nth visibility sensor from the device)	
4	FOR EACH value, N, from 1 to Num_Pressure_Sensors, perform Steps 4.1 through 4.5.	
4.1	Determine a random value from -1000 to 1001. RECORD this information as: »Sensor_Height_Random.N	
4.2	Determine a random value from -90000000 to 90000001. RECORD this information as: »Sensor_Latitude_Random.N	
4.3	Determine a random value from -180000000 to 180000001. RECORD this information as: »Sensor_Longitude_Random.N	
4.4	Determine a random display string from 1 to 255 characters in length. RECORD this information as: »Sensor_Location_Random.N	
4.5	SET the following object(s) to the value(s) shown: »visibilitySensorHeight.N = Sensor_Height_Random.N »visibilitySensorLatitude.N = Sensor_Latitude_Random.N »visibilitySensorLongitude.N = Sensor_Longitude_Random.N »visibilitySensorLocation.N = Sensor_Location_Random.N	Pass / Fail (Clause 3.5.2.16.3)
5	FOR EACH value, N, from 1 to Num_Visibility_Sensors, perform Steps 5.1 through 5.5.	
5.1	GET the following object(s): »visibilitySensorHeight.N »visibilitySensorLatitude.N »visibilitySensorLongitude.N »visibilitySensorLocation.N	Pass / Fail (Clause 3.5.2.1.16.3)

© 2022 AASHTO / ITE / NEMA

5.2	VERIFY that the RESPONSE VALUE for visibilitySensorHeight.N is equal to Sensor_Height_Random.N.	Pass / Fail (Clause 5.10.5.2)
5.3	VERIFY that the RESPONSE VALUE for visibilitySensorLatitude.N is equal to Sensor_Latitude_Random.N.	Pass / Fail (Clause 5.10.5.3)
5.4	VERIFY that the RESPONSE VALUE for visibilitySensorLongitude.N is equal to Sensor_Longitude_Random.N.	Pass / Fail (Clause 5.10.5.4)
5.5	VERIFY that the RESPONSE VALUE for visibilitySensorLocation.N is equal to Sensor_Location_Random.N.	Pass / Fail (Clause 5.10.5.5)
6	FOR EACH value, N, from 1 to Num_Pressure_Sensors, perform Steps 6.1 through 6.1.	
6.1	SET the following object(s) to the value(s) shown: »visibilitySensorHeight.N = Sensor_Height.N »visibilitySensorLatitude.N = Sensor_Latitude.N »visibilitySensorLongitude.N = Sensor_Longitude.N »visibilitySensorLocation.N = Sensor_Location.N	Pass / Fail (Clause 3.5.2.16.3)
7	FOR EACH value, N, from 1 to Num_Visibility_Sensors, perform Steps 7.1 through 7.5.	
7.1	GET the following object(s): »visibilitySensorHeight.N »visibilitySensorLatitude.N »visibilitySensorLongitude.N »visibilitySensorLocation.N	Pass / Fail (Clause 3.5.2.1.16.3)
7.2	VERIFY that the RESPONSE VALUE for visibilitySensorHeight.N is equal to Sensor_Height.N.	Pass / Fail (Clause 5.10.5.2)
7.3	VERIFY that the RESPONSE VALUE for visibilitySensorLatitude.N is equal to Sensor_Latitude.N.	Pass / Fail (Clause 5.10.5.3)
7.4	VERIFY that the RESPONSE VALUE for visibilitySensorLongitude.N is equal to Sensor_Longitude.N.	Pass / Fail (Clause 5.10.5.4)
7.5	VERIFY that the RESPONSE VALUE for visibilitySensorLocation.N is equal to Sensor_Location.N.	Pass / Fail (Clause 5.10.5.5)

Test Case Results		
Tested By:	***Date Tested:***	***Pass / Fail***
Test Case Notes:		

© 2022 AASHTO / ITE / NEMA

C.2.3.2.32 Retrieve Pavement Sensor Metadata - Location

Test Case: 2.32	***Title:***	*Retrieve Metadata for Each Pavement Sensor - Location*
	Description:	*This test case verifies that the ESS allows a management station to determine the location and relative height of each pavement sensor*
	Variables:	*Supported_Pavement_Sensors* *(PRL 3.6.8)*
	Pass/Fail Criteria:	*The device under test (DUT) shall pass every verification step included within the Test Case in order to pass the Test Case.*

Step	***Test Procedure***	***Device***
1	CONFIGURE: Determine the number of precipitation sensors that the ESS is required to support.	
2	GET the following object(s): » numEssPavementSensors.0	Pass / Fail (Clause 3.5.2.1.17.1)
3	VERIFY that the RESPONSE VALUE for numEssPavementSensors.0 is greater than or equal to Supported_Pavement_Sensors.	Pass / Fail (PRL 3.6.8)
4	Determine the RESPONSE VALUE for numEssPavementSensors.0. RECORD this information as: »Supported_Pavement_Sensors	
5	FOR EACH value, N, from 1 to Supported_Pavement_Sensors, perform Steps 5.1 through 5.18.	
5.1	GET the following object(s): »essPavementElevation.N »pavementSensorLatitude.N »pavementSensorLongitude.N »pavementSensorLocation.N »pavementMonitorLatitude.N »pavementMonitorLongitude.N	Pass / Fail (Clause 3.5.2.1.17.1)
5.2	VERIFY that the RESPONSE VALUE for essPavementElevation.N is greater than or equal to -1000.	Pass / Fail (Clause 5.11.3.4)
5.3	VERIFY that the RESPONSE VALUE for essPavementElevation.N is less than or equal to 1001.	Pass / Fail (Clause 5.11.3.4)
5.4	VERIFY that the RESPONSE VALUE for essPavementElevation.N is APPROPRIATE.	Pass / Fail (Clause 5.11.3.4)
5.5	VERIFY that the RESPONSE VALUE for pavementSensorLatitude.N is greater than or equal to -90000000.	Pass / Fail (Clause 5.11.3.20)
5.6	VERIFY that the RESPONSE VALUE for pavementSensorLatitude.N is less than or equal to 90000001.	Pass / Fail (Clause 5.11.3.20)
5.7	VERIFY that the RESPONSE VALUE for pavementSensorLatitude.N is APPROPRIATE.	Pass / Fail (Clause 5.11.3.20)
5.8	VERIFY that the RESPONSE VALUE for pavementSensorLongitude.N is greater than or equal to -180000000.	Pass / Fail (Clause 5.11.3.21)
5.9	VERIFY that the RESPONSE VALUE for pavementSensorLongitude.N is less than or equal to 180000001.	Pass / Fail (Clause 5.11.3.21)
5.10	VERIFY that the RESPONSE VALUE for pavementSensorLongitude.N is APPROPRIATE.	Pass / Fail (Clause 5.11.3.21)

© 2022 AASHTO / ITE / NEMA Copy Per TRF Distribution Permission

5.11	VERIFY that the RESPONSE VALUE for pavementMonitorLatitude.N is greater than or equal to -90000000.	Pass / Fail (Clause 5.11.3.25)
5.12	VERIFY that the RESPONSE VALUE for pavementMonitorLatitude.N is less than or equal to 90000001.	Pass / Fail (Clause 5.11.3.25)
5.13	VERIFY that the RESPONSE VALUE for pavementMonitorLatitude.N is APPROPRIATE.	Pass / Fail (Clause 5.11.3.25)
5.14	VERIFY that the RESPONSE VALUE for pavementMonitorLongitude.N is greater than or equal to -180000000.	Pass / Fail (Clause 5.11.3.26)
5.15	VERIFY that the RESPONSE VALUE for pavementMonitorLongitude.N is less than or equal to 180000001.	Pass / Fail (Clause 5.11.3.26)
5.16	VERIFY that the RESPONSE VALUE for pavementMonitorLongitude.N is APPROPRIATE.	Pass / Fail (Clause 5.11.3.26)
5.17	VERIFY that the RESPONSE VALUE for pavementSensorLocation.N is a valid DisplayString with no more than 255 characters.	Pass / Fail (Clause 5.11.3.2)
5.18	VERIFY that the RESPONSE VALUE for pavementSensorLocation.N is APPROPRIATE.	Pass / Fail (Clause 5.11.3.2)

Test Case Results		
Tested By:	***Date Tested:***	***Pass / Fail***
Test Case Notes:		

© 2022 AASHTO / ITE / NEMA

C.2.3.2.33 Retrieve Pavement Sensor Metadata - Sensor Information

Test Case: 2.33	***Title:***	*Retrieve Metadata for Each Pavement Sensor - Sensor Information*	
	Description:	*This test case verifies that the ESS allows a management station to determine the sensor information of each pavement sensor*	
	Variables:	*Supported_Pavement_Sensors*	*(PRL 3.6.8)*
	Pass/Fail Criteria:	*The device under test (DUT) shall pass every verification step included within the Test Case in order to pass the Test Case.*	

Step	***Test Procedure***	***Device***
1	CONFIGURE: Determine the number of pavement sensors that the ESS is required to support.	
2	GET the following object(s): » numEssPavementSensors.0	Pass / Fail (Clause 3.5.2.1.17.2)
3	VERIFY that the RESPONSE VALUE for numEssPavementSensors.0 is greater than or equal to Supported_Pavement_Sensors.	Pass / Fail (PRL 3.6.8)
4	Determine the RESPONSE VALUE for numEssPavementSensors.0. RECORD this information as: »Supported_Pavement_Sensors	
5	FOR EACH value, N, from 1 to Supported_Pavement_Sensors, perform Steps 5.1 through 5.4.	
5.1	GET the following object(s): »pavementSensorModelInformation.N	Pass / Fail (Clause 3.5.2.1.17.2)
5.2	VERIFY that the RESPONSE VALUE for pavementSensorModelInformation.N is greater than or equal to 0.	Pass / Fail (Clause 5.11.3.18)
5.3	VERIFY that the RESPONSE VALUE for pavementSensorModelInformation.N is less than or equal to 255.	Pass / Fail (Clause 5.11.3.18)
5.4	VERIFY that the RESPONSE VALUE for pavementSensorModelInformation.N is APPROPRIATE.	Pass / Fail (Clause 5.11.3.18)

Test Case Results		
Tested By:	***Date Tested:***	***Pass / Fail***
Test Case Notes:		

© 2022 AASHTO / ITE / NEMA

C.2.3.2.34 Configure Pavement Sensor Metadata - Location

Test Case: 2.34	***Title:***	*Configure Pavement Sensor Metadata - Location*
	Description:	*This test case verifies that the ESS allows a management station to store location and relative height information regarding pavement sensors.*
	Variables:	
	Pass/Fail Criteria:	*The device under test (DUT) shall pass every verification step included within the Test Case in order to pass the Test Case.*

Step	***Test Procedure***	***Device***
1	GET the following object(s): » numEssPavementSensors.0	Pass / Fail (Clause 3.5.2.1.17.3)
2	Determine the RESPONSE VALUE for numEssPavementSensors.0. RECORD this information as: »Num_Pavement_Sensors	
3	FOR EACH value, N, from 1 to Num_Pavement_Sensors, perform Steps 3.1 through 3.2.	
3.1	GET the following object(s): »essPavementElevation.N »pavementSensorLatitude.N »pavementSensorLongitude.N »pavementMonitorLatitude.N »pavementMonitorLongitude.N »pavementSensorLocation.N	Pass / Fail (Clause 3.5.2.1.17.3)
3.2	Determine the values for the retrieved information. RECORD this information as: »Sensor_Height[N] (the height of the Nth pavement sensor from the device) »Sensor_Latitude[N] (the latitude of the Nth pavement sensor from the device) »Sensor_Longitude[N] (the longitude of the Nth pavement sensor from the device) »Monitor_Latitude[N] (the latitude of the Nth location being monitored by the device) »Monitor_Longitude[N] (the longitude of the Nth location being monitored by the device) »Sensor_Location[N] (the location of the Nth pavement sensor from the device)	
4	FOR EACH value, N, from 1 to Num_Pressure_Sensors, perform Steps 4.1 through 4.7.	
4.1	Determine a random value from -1000 to 1001. RECORD this information as: »Sensor_Height_Random.N	
4.2	Determine a random value from -90000000 to 90000001. RECORD this information as: »Sensor_Latitude_Random.N	
4.3	Determine a random value from -180000000 to 180000001. RECORD this information as: »Sensor_Longitude_Random.N	
4.4	Determine a random value from -90000000 to 90000001. RECORD this information as: »Monitor_Latitude_Random.N	
4.5	Determine a random value from -180000000 to 180000001. RECORD this information as: »Monitor_Longitude_Random.N	
4.6	Determine a random display string from 1 to 255 characters in length. RECORD this information as: »Sensor_Location_Random.N	

Copy Per TRF Distribution Permission © 2022 AASHTO / ITE / NEMA

4.7	SET the following object(s) to the value(s) shown: »essPavementElevation.N = Sensor_Height_Random.N »pavementSensorLatitude.N = Sensor_Latitude_Random.N »pavementSensorLongitude.N = Sensor_Longitude_Random.N »pavementMonitorLatitude.N = Monitor_Latitude_Random.N »pavementMonitorLongitude.N = Monitor_Longitude_Random.N »pavementSensorLocation.N = Sensor_Location_Random.N	Pass / Fail (Clause 3.5.2.17.3)
5	FOR EACH value, N, from 1 to Num_Pavement_Sensors, perform Steps 5.1 through 5.7.	
5.1	GET the following object(s): » essPavementElevation.N »pavementSensorLatitude.N »pavementSensorLongitude.N »pavementMonitorLatitude.N »pavementMonitorLongitude.N »pavementSensorLocation.N	Pass / Fail (Clause 3.5.2.1.17.3)
5.2	VERIFY that the RESPONSE VALUE for essPavementElevation.N is equal to Sensor_Height_Random.N.	Pass / Fail (Clause 5.11.3.4)
5.3	VERIFY that the RESPONSE VALUE for pavementSensorLatitude.N is equal to Sensor_Latitude_Random.N.	Pass / Fail (Clause 5.11.3.20)
5.4	VERIFY that the RESPONSE VALUE for pavementSensorLongitude.N is equal to Sensor_Longitude_Random.N.	Pass / Fail (Clause 5.11.3.21)
5.5	VERIFY that the RESPONSE VALUE for pavementMonitorLatitude.N is equal to Monitor_Latitude_Random.N.	Pass / Fail (Clause 5.11.3.25)
5.6	VERIFY that the RESPONSE VALUE for pavementMonitorLongitude.N is equal to Monitor_Longitude_Random.N.	Pass / Fail (Clause 5.11.3.26)
5.7	VERIFY that the RESPONSE VALUE for pavementSensorLocation.N is equal to Sensor_Location_Random.N.	Pass / Fail (Clause 5.11.3.2)
6	FOR EACH value, N, from 1 to Num_Pressure_Sensors, perform Step 6.1.	
6.1	SET the following object(s) to the value(s) shown: »essPavementElevation.N = Sensor_Height.N »pavementSensorLatitude.N = Sensor_Latitude.N »pavementSensorLongitude.N = Sensor_Longitude.N »pavementMonitorLatitude.N = Monitor_Latitude.N »pavementMonitorLongitude.N = Monitor_Longitude.N »pavementSensorLocation.N = Sensor_Location.N	Pass / Fail (Clause 3.5.2.17.3)
7	FOR EACH value, N, from 1 to Num_Pavement_Sensors, perform Steps 7.1 through 7.7.	
7.1	GET the following object(s): »essPavementElevation.N »pavementSensorLatitude.N »pavementSensorLongitude.N »pavementMonitorLatitude.N »pavementMonitorLongitude.N »pavementSensorLocation.N	Pass / Fail (Clause 3.5.2.1.17.3)
7.2	VERIFY that the RESPONSE VALUE for essPavementElevation.N is equal to Sensor_Height.N.	Pass / Fail (Clause 5.11.3.4)
7.3	VERIFY that the RESPONSE VALUE for pavementSensorLatitude.N is equal to Sensor_Latitude.N.	Pass / Fail (Clause 5.11.3.20)

© 2022 AASHTO / ITE / NEMA Copy Per TRF Distribution Permission

7.4	VERIFY that the RESPONSE VALUE for pavementSensorLongitude.N is equal to Sensor_Longitude.N.	Pass / Fail (Clause 5.11.3.21)
7.5	VERIFY that the RESPONSE VALUE for pavementMonitorLatitude.N is equal to Monitor_Latitude.N.	Pass / Fail (Clause 5.11.3.25)
7.6	VERIFY that the RESPONSE VALUE for pavementMonitorLongitude.N is equal to Monitor_Longitude.N.	Pass / Fail (Clause 5.11.3.26)
7.7	VERIFY that the RESPONSE VALUE for pavementSensorLocation.N is equal to Sensor_Location.N.	Pass / Fail (Clause 5.11.3.2)

Test Case Results		
Tested By:	***Date Tested:***	***Pass / Fail***
Test Case Notes:		

© 2022 AASHTO / ITE / NEMA

C.2.3.2.35 Retrieve SubSurface Sensor Metadata - Location

Test Case: 2.35	***Title:***	*Retrieve Metadata for Each SubSurface Sensor - Location*	
	Description:	*This test case verifies that the ESS allows a management station to determine the location and relative height of each subsurface sensor*	
	Variables:	*Supported_SubSurface_Sensors*	*(PRL 3.6.11)*
	Pass/Fail Criteria:	*The device under test (DUT) shall pass every verification step included within the Test Case in order to pass the Test Case.*	

Step	***Test Procedure***	***Device***
1	CONFIGURE: Determine the number of subsurface sensors that the ESS is required to support.	
2	GET the following object(s): » numEssSubSurfaceSensors.0	Pass / Fail (Clause 3.5.2.1.18.1)
3	VERIFY that the RESPONSE VALUE for numEssSubSurfaceSensors.0 is greater than or equal to Supported_SubSurface_Sensors.	Pass / Fail (Clause 3.5.2.1.18.1)
4	Determine the RESPONSE VALUE for numEssSubSurfaceSensors.0. RECORD this information as: »Supported_SubSurface_Sensors	
5	FOR EACH value, N, from 1 to Supported_SubSurface_Sensors, perform Steps 5.1 through 5.12.	
5.1	GET the following object(s): »essSubSurfaceSensorDepth.N »essSubSurfaceSensorLatitude.N »essSubSurfaceSensorLongitude.N »essSubSurfaceSensorLocation.N	Pass / Fail (Clause 3.5.2.1.18.1)
5.2	VERIFY that the RESPONSE VALUE for essSubSurfaceSensorDepth.N is greater than or equal to -1000.	Pass / Fail (Clause 5.11.6.4)
5.3	VERIFY that the RESPONSE VALUE for essSubSurfaceSensorDepth.N is less than or equal to 1001.	Pass / Fail (Clause 5.11.6.4)
5.4	VERIFY that the RESPONSE VALUE for essSubSurfaceSensorDepth.N is APPROPRIATE.	Pass / Fail (Clause 5.11.6.4)
5.5	VERIFY that the RESPONSE VALUE for essSubSurfaceSensorLatitude.N is greater than or equal to -90000000.	Pass / Fail (Clause 5.11.6.8)
5.6	VERIFY that the RESPONSE VALUE for essSubSurfaceSensorLatitude.N is less than or equal to 90000001.	Pass / Fail (Clause 5.11.6.8)
5.7	VERIFY that the RESPONSE VALUE for essSubSurfaceSensorLatitude.N is APPROPRIATE.	Pass / Fail (Clause 5.11.6.8)
5.8	VERIFY that the RESPONSE VALUE for essSubSurfaceSensorLongitude.N is greater than or equal to -180000000.	Pass / Fail (Clause 5.11.6.9)
5.9	VERIFY that the RESPONSE VALUE for essSubSurfaceSensorLongitude.N is less than or equal to 180000001.	Pass / Fail (Clause 5.11.6.9)
5.10	VERIFY that the RESPONSE VALUE for essSubSurfaceSensorLongitude.N is APPROPRIATE.	Pass / Fail (Clause 5.11.6.9)

© 2022 AASHTO / ITE / NEMA Copy Per TRF Distribution Permission

5.11	VERIFY that the RESPONSE VALUE for essSubSurfaceSensorLocation.N is a valid DisplayString with no more than 255 characters.	Pass / Fail (Clause 5.11.6.2)
5.12	VERIFY that the RESPONSE VALUE for essSubSurfaceSensorLocation.N is APPROPRIATE.	Pass / Fail (Clause 5.11.6.2)

Test Case Results		
Tested By:	***Date Tested:***	***Pass / Fail***
Test Case Notes:		

© 2022 AASHTO / ITE / NEMA

C.2.3.2.36 Retrieve SubSurface Sensor Metadata - Sensor Information

Test Case: 2.36	***Title:***	*Retrieve Metadata for Each SubSurface Sensor - Sensor Information*	
	Description:	*This test case verifies that the ESS allows a management station to determine the sensor information of each subsurface sensor*	
	Variables:	*Supported_SubSurface_Sensors*	*(PRL 3.6.11)*
	Pass/Fail Criteria:	*The device under test (DUT) shall pass every verification step included within the Test Case in order to pass the Test Case.*	

Step	***Test Procedure***	***Device***
1	CONFIGURE: Determine the number of pavement sensors that the ESS is required to support.	
2	GET the following object(s): » numEssSubSurfaceSensors.0	Pass / Fail (Clause 3.5.2.1.18.2)
3	VERIFY that the RESPONSE VALUE for numEssSubSurfaceSensors.0 is greater than or equal to Supported_SubSurface_Sensors.	Pass / Fail (PRL 3.6.11)
4	Determine the RESPONSE VALUE for numEssSubSurfaceSensors.0. RECORD this information as: »Supported_SubSurface_Sensors	
5	FOR EACH value, N, from 1 to Supported_SubSurface_Sensors, perform Steps 5.1 through 5.4.	
5.1	GET the following object(s): »essSubSurfaceSensorModelInformation.N	Pass / Fail (Clause 3.5.2.1.18.2)
5.2	VERIFY that the RESPONSE VALUE for essSubSurfaceSensorModelInformation.N is greater than or equal to 0.	Pass / Fail (Clause 5.11.6.10)
5.3	VERIFY that the RESPONSE VALUE for essSubSurfaceSensorModelInformation.N is less than or equal to 255.	Pass / Fail (Clause 5.11.6.10)
5.4	VERIFY that the RESPONSE VALUE for essSubSurfaceSensorModelInformation.N is APPROPRIATE.	Pass / Fail (Clause 5.11.6.10)

Test Case Results		
Tested By:	***Date Tested:***	***Pass / Fail***
Test Case Notes:		

© 2022 AASHTO / ITE / NEMA

C.2.3.2.37 Configure SubSurface Sensor Metadata - Location

Test Case: 2.37	***Title:***	*Configure SubSurface Sensor Metadata - Location*
	Description:	*This test case verifies that the ESS allows a management station to store location and relative height information regarding subsurface sensors.*
	Variables:	
	Pass/Fail Criteria:	*The device under test (DUT) shall pass every verification step included within the Test Case in order to pass the Test Case.*

Step	***Test Procedure***	***Device***
1	GET the following object(s): » numEssSubSurfaceSensors.0	Pass / Fail (Clause 3.5.2.1.18.3)
2	Determine the RESPONSE VALUE for numEssSubSurfaceSensors.0. RECORD this information as: »Num_SubSurface_Sensors	
3	FOR EACH value, N, from 1 to Num_SubSurface_Sensors, perform Steps 3.1 through 3.2.	
3.1	GET the following object(s): »essSubSurfaceSensorDepth.N »essSubSurfaceSensorLatitude.N »essSubSurfaceSensorLongitude.N »essSubSurfaceSensorLocation.N	Pass / Fail (Clause 3.5.2.1.18.3)
3.2	Determine the values for the retrieved information. RECORD this information as: »Sensor_Height[N] (the height of the Nth pavement sensor from the device) »Sensor_Latitude[N] (the latitude of the Nth pavement sensor from the device) »Sensor_Longitude[N] (the longitude of the Nth pavement sensor from the device) »Sensor_Location[N] (the location of the Nth pavement sensor from the device)	
4	FOR EACH value, N, from 1 to Num_Pressure_Sensors, perform Steps 4.1 through 4.5.	
4.1	Determine a random value from -1000 to 1001. RECORD this information as: »Sensor_Height_Random.N	
4.2	Determine a random value from -90000000 to 90000001. RECORD this information as: »Sensor_Latitude_Random.N	
4.3	Determine a random value from -180000000 to 180000001. RECORD this information as: »Sensor_Longitude_Random.N	
4.4	Determine a random display string from 1 to 255 characters in length. RECORD this information as: »Sensor_Location_Random.N	
4.5	SET the following object(s) to the value(s) shown: »essSubSurfaceSensorDepth.N = Sensor_Height_Random.N »essSubSurfaceSensorLatitude.N = Sensor_Latitude_Random.N »essSubSurfaceSensorLongitude.N = Sensor_Longitude_Random.N »essSubSurfaceSensorLocation.N = Sensor_Location_Random.N	Pass / Fail (Clause 3.5.2.18.3)
5	FOR EACH value, N, from 1 to Num_SubSurface_Sensors, perform Steps 5.1 through 5.5.	

Copy Per TRF Distribution Permission © 2022 AASHTO / ITE / NEMA

5.1	GET the following object(s): »essSubSurfaceSensorDepth.N »essSubSurfaceSensorLatitude.N »essSubSurfaceSensorLongitude.N »essSubSurfaceSensorLocation.N	Pass / Fail (Clause 3.5.2.1.18.3)
5.2	VERIFY that the RESPONSE VALUE for essSubSurfaceSensorDepth.N is equal to Sensor_Height_Random.N.	Pass / Fail (Clause 5.11.6.4)
5.3	VERIFY that the RESPONSE VALUE for essSubSurfaceSensorLatitude.N is equal to Sensor_Latitude_Random.N.	Pass / Fail (Clause 5.11.6.8)
5.4	VERIFY that the RESPONSE VALUE for essSubSurfaceSensorLongitude.N is equal to Sensor_Longitude_Random.N.	Pass / Fail (Clause 5.11.6.9)
5.5	VERIFY that the RESPONSE VALUE for essSubSurfaceSensorLocation.N is equal to Sensor_Location_Random.N.	Pass / Fail (Clause 5.11.6.2)
6	FOR EACH value, N, from 1 to Num_Pressure_Sensors, perform Steps 6.1 through 6.1.	
6.1	SET the following object(s) to the value(s) shown: »essSubSurfaceSensorDepth.N = Sensor_Height.N »essSubSurfaceSensorLatitude.N = Sensor_Latitude.N »essSubSurfaceSensorLongitude.N = Sensor_Longitude.N »essSubSurfaceSensorLocation.N = Sensor_Location.N	Pass / Fail (Clause 3.5.2.18.3)
7	FOR EACH value, N, from 1 to Num_SubSurface_Sensors, perform Steps 7.1 through 7.5.	
7.1	GET the following object(s): »essSubSurfaceSensorDepth.N »essSubSurfaceSensorLatitude.N »essSubSurfaceSensorLongitude.N »essSubSurfaceSensorLocation.N	Pass / Fail (Clause 3.5.2.1.18.3)
7.2	VERIFY that the RESPONSE VALUE for essSubSurfaceSensorDepth.N is equal to Sensor_Height.N.	Pass / Fail (Clause 5.11.6.4)
7.3	VERIFY that the RESPONSE VALUE for essSubSurfaceSensorLatitude.N is equal to Sensor_Latitude.N.	Pass / Fail (Clause 5.11.6.8)
7.4	VERIFY that the RESPONSE VALUE for essSubSurfaceSensorLongitude.N is equal to Sensor_Longitude.N.	Pass / Fail (Clause 5.11.6.9)
7.5	VERIFY that the RESPONSE VALUE for essSubSurfaceSensorLocation.N is equal to Sensor_Location.N.	Pass / Fail (Clause 5.11.6.2)

Test Case Results		
Tested By:	***Date Tested:***	***Pass / Fail***
Test Case Notes:		

© 2022 AASHTO / ITE / NEMA

C.2.3.2.38 Retrieve Air Quality Sensor Metadata - Location

Test Case: 2.38	***Title:***	*Retrieve Metadata for Each Air Quality Sensor - Location*	
	Description:	*This test case verifies that the ESS allows a management station to determine the location and relative height of each air quality sensor*	
	Variables:	*Required_CO_Sensors*	*(PRL 3.6.13)*
		Required _CO2_Sensors	*(PRL 3.6.14)*
		Required _NO_Sensors	*(PRL 3.6.15)*
		Required _NO2_Sensors	*(PRL 3.6.16)*
		Required _SO2_Sensors	*(PRL 3.6.17)*
		Required _O3_Sensors	*(PRL 3.6.18)*
		Required _PM10_Sensors	*(PRL 3.6.19)*
		Required _PM25_Sensors	*(PRL 3.6.28)*
	Pass/Fail Criteria:	*The device under test (DUT) shall pass every verification step included within the Test Case in order to pass the Test Case.*	

Step	***Test Procedure***	***Device***
1	CONFIGURE: Determine the number of air quality sensors that the ESS is required to support. This is greater than or equal to the greater of Required _CO_Sensors, Required _CO2_Sensors, Supported_NO_Sensors, Required _NO2_Sensors, Required _SO2_Sensors, Supported O3_Sensors, Required _PM10_Sensors, or Required _PM25_Sensors. RECORD this information as: » Required_AirQuality_Sensors	
2	GET the following object(s): » airQualitySensorTableNumSensors.0	Pass / Fail (Clause 3.5.2.1.20.1)
3	VERIFY that the RESPONSE VALUE for airQualitySensorTableNumSensors.0 is greater than or equal to Required_AirQuality_Sensors.	Pass / Fail (Clause 3.5.2.1.20.1)
4	Determine the RESPONSE VALUE for airQualitySensorTableNumSensors.0. RECORD this information as: »Supported_AirQuality_Sensors	
5	FOR EACH value, N, from 1 to Supported_AirQuality_Sensors, perform Steps 5.1 through 5.12.	
5.1	GET the following object(s): »airQualitySensorHeight.N »airQualitySensorLatitude.N »airQualitySensorLongitude.N »airQualitySensorLocation.N	Pass / Fail (Clause 3.5.2.1.20.1)
5.2	VERIFY that the RESPONSE VALUE for airQualitySensorHeight.N is greater than or equal to -1000.	Pass / Fail (Clause 5.14.12.2)
5.3	VERIFY that the RESPONSE VALUE for airQualitySensorHeight.N is less than or equal to 1001.	Pass / Fail (Clause 5.14.12.2)
5.4	VERIFY that the RESPONSE VALUE for airQualitySensorHeight.N is APPROPRIATE.	Pass / Fail (Clause 5.14.12.2)
5.5	VERIFY that the RESPONSE VALUE for airQualitySensorLatitude.N is greater than or equal to -90000000.	Pass / Fail (Clause 5.14.12.3)
5.6	VERIFY that the RESPONSE VALUE for airQualitySensorLatitude.N is less than or equal to 90000001.	Pass / Fail (Clause 5.14.12.3)

Copy Per TRF Distribution Permission © 2022 AASHTO / ITE / NEMA

5.7	VERIFY that the RESPONSE VALUE for airQualitySensorLatitude.N is APPROPRIATE.	Pass / Fail (Clause 5.14.12.3)
5.8	VERIFY that the RESPONSE VALUE for airQualitySensorLongitude.N is greater than or equal to -180000000.	Pass / Fail (Clause 5.14.12.4)
5.9	VERIFY that the RESPONSE VALUE for airQualitySensorLongitude.N is less than or equal to 180000001.	Pass / Fail (Clause 5.14.12.4)
5.10	VERIFY that the RESPONSE VALUE for airQualitySensorLongitude.N is APPROPRIATE.	Pass / Fail (Clause 5.14.12.4)
5.11	VERIFY that the RESPONSE VALUE for airQualitySensorLocation.N is a valid DisplayString with no more than 255 characters.	Pass / Fail (Clause 5.14.12.5)
5.12	VERIFY that the RESPONSE VALUE for airQualitySensorLocation.N is APPROPRIATE.	Pass / Fail (Clause 5.14.12.5)

Test Case Results		
Tested By:	***Date Tested:***	***Pass / Fail***
Test Case Notes:		

© 2022 AASHTO / ITE / NEMA

C.2.3.2.39 Retrieve Air Quality Sensor Metadata - Sensor Information

Test Case: 2.39	***Title:***	*Retrieve Metadata for Each Air Quality Sensor - Sensor Information*	
	Description:	*This test case verifies that the ESS allows a management station to determine the sensor information of each air quality sensor*	
	Variables:	*Required_CO_Sensors*	*(PRL 3.6.13)*
		Required _CO2_Sensors	*(PRL 3.6.14)*
		Required _NO_Sensors	*(PRL 3.6.15)*
		Required _NO2_Sensors	*(PRL 3.6.16)*
		Required _SO2_Sensors	*(PRL 3.6.17)*
		Required _O3_Sensors	*(PRL 3.6.18)*
		Required _PM10_Sensors	*(PRL 3.6.19)*
		Required _PM25_Sensors	*(PRL 3.6.28)*
	Pass/Fail Criteria:	*The device under test (DUT) shall pass every verification step included within the Test Case in order to pass the Test Case.*	

Step	***Test Procedure***	***Device***
1	CONFIGURE: Determine the number of air quality sensors that the ESS is required to support. This is greater than or equal to the greater of Required _CO_Sensors, Required _CO2_Sensors, Supported_NO_Sensors, Required _NO2_Sensors, Required _SO2_Sensors, Supported O3_Sensors, Required _PM10_Sensors, or Required _PM25_Sensors. RECORD this information as: » Required_AirQuality_Sensors	
2	GET the following object(s): » airQualitySensorTableNumSensors.0	Pass / Fail (Clause 3.5.2.1.20.2)
3	VERIFY that the RESPONSE VALUE for airQualitySensorTableNumSensors.0 is greater than or equal to Required_AirQuality_Sensors.	Pass / Fail (Clause 3.5.2.1.20.2)
4	Determine the RESPONSE VALUE for airQualitySensorTableNumSensors.0. RECORD this information as: »Supported_AirQuality_Sensors	
5	FOR EACH value, N, from 1 to Supported_AirQuality_Sensors, perform Steps 5.1 through 5.4.	
5.1	GET the following object(s): »airQualitySensorModelInformation.N	Pass / Fail (Clause 3.5.2.1.20.2)
5.2	VERIFY that the RESPONSE VALUE for airQualitySensorModelInformation.N is greater than or equal to 0.	Pass / Fail (Clause 5.14.12.6)
5.3	VERIFY that the RESPONSE VALUE for airQualitySensorModelInformation.N is less than or equal to 255.	Pass / Fail (Clause 5.14.12.6)
5.4	VERIFY that the RESPONSE VALUE for airQualitySensorModelInformation.N is APPROPRIATE.	Pass / Fail (Clause 5.14.12.6)

Test Case Results		
Tested By:	***Date Tested:***	***Pass / Fail***
Test Case Notes:		

© 2022 AASHTO / ITE / NEMA

C.2.3.2.40 Configure Air Quality Sensor Metadata - Location

Test Case: 2.40	***Title:***	*Configure Air Quality Sensor Metadata - Location*
	Description:	*This test case verifies that the ESS allows a management station to store location and relative height information regarding air quality sensors.*
	Variables:	
	Pass/Fail Criteria:	*The device under test (DUT) shall pass every verification step included within the Test Case in order to pass the Test Case.*

Step	***Test Procedure***	***Device***
1	GET the following object(s): » airQualitySensorTableNumSensors.0	Pass / Fail (Clause 3.5.2.1.20.3)
2	Determine the RESPONSE VALUE for airQualitySensorTableNumSensors.0. RECORD this information as: »Num_AirQuality_Sensors	
3	FOR EACH value, N, from 1 to Num_AirQuality_Sensors, perform Steps 3.1 through 3.2.	
3.1	GET the following object(s): »airQualitySensorHeight.N »airQualitySensorLatitude.N »airQualitySensorLongitude.N »airQualitySensorLocation.N	Pass / Fail (Clause 3.5.2.1.20.3)
3.2	Determine the values for the retrieved information. RECORD this information as: »Sensor_Height[N] (the height of the Nth air quality sensor from the device) »Sensor_Latitude[N] (the latitude of the Nth air quality sensor from the device) »Sensor_Longitude[N] (the longitude of the Nth air quality sensor from the device) »Sensor_Location[N] (the location of the Nth air quality sensor from the device)	
4	FOR EACH value, N, from 1 to Num_Pressure_Sensors, perform Steps 4.1 through 4.5.	
4.1	Determine a random value from -1000 to 1001. RECORD this information as: »Sensor_Height_Random.N	
4.2	Determine a random value from -90000000 to 90000001. RECORD this information as: »Sensor_Latitude_Random.N	
4.3	Determine a random value from -180000000 to 180000001. RECORD this information as: »Sensor_Longitude_Random.N	
4.4	Determine a random display string from 1 to 255 characters in length. RECORD this information as: »Sensor_Location_Random.N	
4.5	SET the following object(s) to the value(s) shown: »airQualitySensorHeight.N = Sensor_Height_Random.N »airQualitySensorLatitude.N = Sensor_Latitude_Random.N »airQualitySensorLongitude.N = Sensor_Longitude_Random.N »airQualitySensorLocation.N = Sensor_Location_Random.N	Pass / Fail (Clause 3.5.2.20.3)
5	FOR EACH value, N, from 1 to Num_AirQuality_Sensors, perform Steps 5.1 through 5.5.	

© 2022 AASHTO / ITE / NEMA Copy Per TRF Distribution Permission

5.1	GET the following object(s): »airQualitySensorHeight.N »airQualitySensorLatitude.N »airQualitySensorLongitude.N »airQualitySensorLocation.N	Pass / Fail (Clause 3.5.2.1.20.3)
5.2	VERIFY that the RESPONSE VALUE for airQualitySensorHeight.N is equal to Sensor_Height_Random.N.	Pass / Fail (Clause 5.14.12.2)
5.3	VERIFY that the RESPONSE VALUE for airQualitySensorLatitude.N is equal to Sensor_Latitude_Random.N.	Pass / Fail (Clause 5.14.12.3)
5.4	VERIFY that the RESPONSE VALUE for airQualitySensorLongitude.N is equal to Sensor_Longitude_Random.N.	Pass / Fail (Clause 5.14.12.4)
5.5	VERIFY that the RESPONSE VALUE for airQualitySensorLocation.N is equal to Sensor_Location_Random.N.	Pass / Fail (Clause 5.14.12.5)
6	FOR EACH value, N, from 1 to Num_Pressure_Sensors, perform Steps 6.1 through 6.1.	
6.1	SET the following object(s) to the value(s) shown: »airQualitySensorHeight.N = Sensor_Height.N »airQualitySensorLatitude.N = Sensor_Latitude.N »airQualitySensorLongitude.N = Sensor_Longitude.N »airQualitySensorLocation.N = Sensor_Location.N	Pass / Fail (Clause 3.5.2.20.3)
7	FOR EACH value, N, from 1 to Num_AirQuality_Sensors, perform Steps 7.1 through 7.5.	
7.1	GET the following object(s): »airQualitySensorHeight.N »airQualitySensorLatitude.N »airQualitySensorLongitude.N »airQualitySensorLocation.N	Pass / Fail (Clause 3.5.2.1.20.3)
7.2	VERIFY that the RESPONSE VALUE for airQualitySensorHeight.N is equal to Sensor_Height.N.	Pass / Fail (Clause 5.14.12.2)
7.3	VERIFY that the RESPONSE VALUE for airQualitySensorLatitude.N is equal to Sensor_Latitude.N.	Pass / Fail (Clause 5.14.12.3)
7.4	VERIFY that the RESPONSE VALUE for airQualitySensorLongitude.N is equal to Sensor_Longitude.N.	Pass / Fail (Clause 5.14.12.4)
7.5	VERIFY that the RESPONSE VALUE for airQualitySensorLocation.N is equal to Sensor_Location.N.	Pass / Fail (Clause 5.14.12.5)

Test Case Results		
Tested By:	***Date Tested:***	***Pass / Fail***
Test Case Notes:		

© 2022 AASHTO / ITE / NEMA

C.2.3.2.41 Retrieve Water Level Sensor Metadata - Location

Test Case: 2.41	***Title:***	*Retrieve Metadata for Each Water Level Sensor - Location*	
	Description:	*This test case verifies that the ESS allows a management station to determine the location and relative height of each water level sensor*	
	Variables:	*Supported_WaterLevel_Sensors*	*(PRL 3.6.22)*
	Pass/Fail Criteria:	*The device under test (DUT) shall pass every verification step included within the Test Case in order to pass the Test Case.*	

Step	***Test Procedure***	***Device***
1	CONFIGURE: Determine the number of water level sensors that the ESS is required to support.	
2	GET the following object(s): » waterLevelSensorTableNumSensors.0	Pass / Fail (Clause 3.5.2.1.21.1)
3	VERIFY that the RESPONSE VALUE for waterLevelSensorTableNumSensors.0 is greater than or equal to Supported_WaterLevel_Sensors.	Pass / Fail (PRL 3.6.22)
4	Determine the RESPONSE VALUE for waterLevelSensorTableNumSensors.0. RECORD this information as: »Supported_WaterLevel_Sensors	
5	FOR EACH value, N, from 1 to Supported_WaterLevel_Sensors, perform Steps 5.1 through 5.12.	
5.1	GET the following object(s): »waterLevelSensorHeight.N »waterLevelSensorLatitude.N »waterLevelSensorLongitude.N »waterLevelSensorLocation.N	Pass / Fail (Clause 3.5.2.1.21.1)
5.2	VERIFY that the RESPONSE VALUE for waterLevelSensorHeight.N is greater than or equal to -1000.	Pass / Fail (Clause 5.8.21.4)
5.3	VERIFY that the RESPONSE VALUE for waterLevelSensorHeight.N is less than or equal to 1001.	Pass / Fail (Clause 5.8.21.4)
5.4	VERIFY that the RESPONSE VALUE for waterLevelSensorHeight.N is APPROPRIATE.	Pass / Fail (Clause 5.8.21.4)
5.5	VERIFY that the RESPONSE VALUE for waterLevelSensorLatitude.N is greater than or equal to -90000000.	Pass / Fail (Clause 5.8.21.5)
5.6	VERIFY that the RESPONSE VALUE for waterLevelSensorLatitude.N is less than or equal to 90000001.	Pass / Fail (Clause 5.8.21.5)
5.7	VERIFY that the RESPONSE VALUE for waterLevelSensorLatitude.N is APPROPRIATE.	Pass / Fail (Clause 5.8.21.5)
5.8	VERIFY that the RESPONSE VALUE for waterLevelSensorLongitude.N is greater than or equal to -180000000.	Pass / Fail (Clause 5.8.21.6)
5.9	VERIFY that the RESPONSE VALUE for waterLevelSensorLongitude.N is less than or equal to 180000001.	Pass / Fail (Clause 5.8.21.6)
5.10	VERIFY that the RESPONSE VALUE for waterLevelSensorLongitude.N is APPROPRIATE.	Pass / Fail (Clause 5.8.21.6)

© 2022 AASHTO / ITE / NEMA Copy Per TRF Distribution Permission

5.11	VERIFY that the RESPONSE VALUE for waterLevelSensorLocation.N is a valid DisplayString with no more than 255 characters.	Pass / Fail (Clause 5.8.21.7)
5.12	VERIFY that the RESPONSE VALUE for waterLevelSensorLocation.N is APPROPRIATE.	Pass / Fail (Clause 5.8.21.7)

Test Case Results		
Tested By:	***Date Tested:***	***Pass / Fail***
Test Case Notes:		

© 2022 AASHTO / ITE / NEMA

C.2.3.2.42 Retrieve Water Level Sensor Metadata - Sensor Information

Test Case: 2.42	***Title:***	*Retrieve Metadata for Each Water Level Sensor - Sensor Information*	
	Description:	*This test case verifies that the ESS allows a management station to determine the sensor information of each water level sensor*	
	Variables:	*Supported_WaterLevel_Sensors*	*(PRL 3.6.22)*
	Pass/Fail Criteria:	*The device under test (DUT) shall pass every verification step included within the Test Case in order to pass the Test Case.*	

Step	***Test Procedure***	***Device***
1	CONFIGURE: Determine the number of water level sensors that the ESS is required to support.	
2	GET the following object(s): » waterLevelSensorTableNumSensors.0	Pass / Fail (Clause 3.5.2.1.21.2)
3	VERIFY that the RESPONSE VALUE for waterLevelSensorTableNumSensors.0 is greater than or equal to Supported_WaterLevel_Sensors.	Pass / Fail (PRL 3.6.22)
4	Determine the RESPONSE VALUE for waterLevelSensorTableNumSensors.0. RECORD this information as: »Supported_WaterLevel_Sensors	
5	FOR EACH value, N, from 1 to Supported_WaterLevel_Sensors, perform Steps 5.1 through 5.4.	
5.1	GET the following object(s): »waterLevelSensorModelInformation.N	Pass / Fail (Clause 3.5.2.1.21.2)
5.2	VERIFY that the RESPONSE VALUE for waterLevelSensorModelInformation.N is greater than or equal to 0.	Pass / Fail (Clause 5.8.21.8)
5.3	VERIFY that the RESPONSE VALUE for waterLevelSensorModelInformation.N is less than or equal to 255.	Pass / Fail (Clause 5.8.21.8)
5.4	VERIFY that the RESPONSE VALUE for waterLevelSensorModelInformation.N is APPROPRIATE.	Pass / Fail (Clause 5.8.21.8)

Test Case Results

Tested By:	***Date Tested:***	***Pass / Fail***

Test Case Notes:

© 2022 AASHTO / ITE / NEMA

C.2.3.2.43 Retrieve Water Level Sensor Metadata - Warning Level

Test Case: 2.43	***Title:***	*Retrieve Metadata for Each Water Level Sensor - Warning Level*	
	Description:	*This test case verifies that the ESS allows a management station to determine the warning level information of each water level sensor*	
	Variables:	*Supported_WaterLevel_Sensors*	*(PRL 3.6.22)*
	Pass/Fail Criteria:	*The device under test (DUT) shall pass every verification step included within the Test Case in order to pass the Test Case.*	

Step	***Test Procedure***	***Device***
1	CONFIGURE: Determine the number of water level sensors that the ESS is required to support.	
2	GET the following object(s): » waterLevelSensorTableNumSensors.0	Pass / Fail (Clause 3.5.2.1.21.3)
3	VERIFY that the RESPONSE VALUE for waterLevelSensorTableNumSensors.0 is greater than or equal to Supported_WaterLevel_Sensors.	Pass / Fail (PRL 3.6.22)
4	Determine the RESPONSE VALUE for waterLevelSensorTableNumSensors.0. RECORD this information as: »Supported_WaterLevel_Sensors	
5	FOR EACH value, N, from 1 to Supported_WaterLevel_Sensors, perform Steps 5.1 through 5.4.	
5.1	GET the following object(s): »waterLevelSensorWarningLevel.N	Pass / Fail (Clause 3.5.2.1.21.3)
5.2	VERIFY that the RESPONSE VALUE for waterLevelSensorWarningLevel.N is greater than or equal to 0.	Pass / Fail (Clause 5.8.21.3)
5.3	VERIFY that the RESPONSE VALUE for waterLevelSensorWarningLevel.N is less than or equal to 65535.	Pass / Fail (Clause 5.8.21.3)
5.4	VERIFY that the RESPONSE VALUE for waterLevelSensorWarningLevel.N is APPROPRIATE.	Pass / Fail (Clause 5.8.21.3)

Test Case Results		
Tested By:	***Date Tested:***	***Pass / Fail***
Test Case Notes:		

© 2022 AASHTO / ITE / NEMA

C.2.3.2.44 Configure Water Level Sensor Metadata - Location

Test Case: 2.44	***Title:***	*Configure Water Level Sensor Metadata - Location*
	Description:	*This test case verifies that the ESS allows a management station to store location and relative height information regarding water level sensors.*
	Variables:	
	Pass/Fail Criteria:	*The device under test (DUT) shall pass every verification step included within the Test Case in order to pass the Test Case.*

Step	***Test Procedure***	***Device***
1	GET the following object(s): » waterLevelSensorTableNumSensors.0	Pass / Fail (Clause 3.5.2.1.21.4)
2	Determine the RESPONSE VALUE for waterLevelSensorTableNumSensors.0. RECORD this information as: »Num_WaterLevel_Sensors	
3	FOR EACH value, N, from 1 to Num_WaterLevel_Sensors, perform Steps 3.1 through 3.2.	
3.1	GET the following object(s): »waterLevelSensorHeight.N »waterLevelSensorLatitude.N »waterLevelSensorLongitude.N »waterLevelSensorLocation.N	Pass / Fail (Clause 3.5.2.1.21.4)
3.2	Determine the values for the retrieved information. RECORD this information as: »Sensor_Height[N] (the height of the Nth water level sensor from the device) »Sensor_Latitude[N] (the latitude of the Nth water level sensor from the device) »Sensor_Longitude[N] (the longitude of the Nth water level sensor from the device) »Sensor_Location[N] (the location of the Nth water level sensor from the device)	
4	FOR EACH value, N, from 1 to Num_Pressure_Sensors, perform Steps 4.1 through 4.5.	
4.1	Determine a random value from -1000 to 1001. RECORD this information as: »Sensor_Height_Random.N	
4.2	Determine a random value from -90000000 to 90000001. RECORD this information as: »Sensor_Latitude_Random.N	
4.3	Determine a random value from -180000000 to 180000001. RECORD this information as: »Sensor_Longitude_Random.N	
4.4	Determine a random display string from 1 to 255 characters in length. RECORD this information as: »Sensor_Location_Random.N	
4.5	SET the following object(s) to the value(s) shown: »waterLevelSensorHeight.N = Sensor_Height_Random.N »waterLevelSensorLatitude.N = Sensor_Latitude_Random.N »waterLevelSensorLongitude.N = Sensor_Longitude_Random.N »waterLevelSensorLocation.N = Sensor_Location_Random.N	Pass / Fail (Clause 3.5.2.21.4)
5	FOR EACH value, N, from 1 to Num_WaterLevel_Sensors, perform Steps 5.1 through 5.5.	

© 2022 AASHTO / ITE / NEMA Copy Per TRF Distribution Permission

5.1	GET the following object(s): »waterLevelSensorHeight.N »waterLevelSensorLatitude.N »waterLevelSensorLongitude.N »waterLevelSensorLocation.N	Pass / Fail (Clause 3.5.2.1.21.4)
5.2	VERIFY that the RESPONSE VALUE for waterLevelSensorHeight.N is equal to Sensor_Height_Random.N.	Pass / Fail (Clause 5.8.21.4)
5.3	VERIFY that the RESPONSE VALUE for waterLevelSensorLatitude.N is equal to Sensor_Latitude_Random.N.	Pass / Fail (Clause 5.8.21.5)
5.4	VERIFY that the RESPONSE VALUE for waterLevelSensorLongitude.N is equal to Sensor_Longitude_Random.N.	Pass / Fail (Clause 5.8.21.6)
5.5	VERIFY that the RESPONSE VALUE for waterLevelSensorLocation.N is equal to Sensor_Location_Random.N.	Pass / Fail (Clause 5.8.21.7)
6	FOR EACH value, N, from 1 to Num_Pressure_Sensors, perform Steps 6.1 through 6.1.	
6.1	SET the following object(s) to the value(s) shown: »waterLevelSensorHeight.N = Sensor_Height.N »waterLevelSensorLatitude.N = Sensor_Latitude.N »waterLevelSensorLongitude.N = Sensor_Longitude.N »waterLevelSensorLocation.N = Sensor_Location.N	Pass / Fail (Clause 3.5.2.21.4)
7	FOR EACH value, N, from 1 to Num_WaterLevel_Sensors, perform Steps 7.1 through 7.5.	
7.1	GET the following object(s): »waterLevelSensorHeight.N »waterLevelSensorLatitude.N »waterLevelSensorLongitude.N »waterLevelSensorLocation.N	Pass / Fail (Clause 3.5.2.1.21.4)
7.2	VERIFY that the RESPONSE VALUE for waterLevelSensorHeight.N is equal to Sensor_Height.N.	Pass / Fail (Clause 5.8.21.4)
7.3	VERIFY that the RESPONSE VALUE for waterLevelSensorLatitude.N is equal to Sensor_Latitude.N.	Pass / Fail (Clause 5.8.21.5)
7.4	VERIFY that the RESPONSE VALUE for waterLevelSensorLongitude.N is equal to Sensor_Longitude.N.	Pass / Fail (Clause 5.8.21.6)
7.5	VERIFY that the RESPONSE VALUE for waterLevelSensorLocation.N is equal to Sensor_Location.N.	Pass / Fail (Clause 5.8.21.7)

Test Case Results		
Tested By:	***Date Tested:***	***Pass / Fail***
Test Case Notes:		

© 2022 AASHTO / ITE / NEMA

C.2.3.2.45 Configure Water Level Sensor Metadata - Warning Level

Test Case: 2.45	***Title:***	*Configure Water Level Sensor Metadata - Warning Level*
	Description:	*This test case verifies that the ESS allows a management station to store warning level information regarding water level sensors.*
	Variables:	
	Pass/Fail Criteria:	*The device under test (DUT) shall pass every verification step included within the Test Case in order to pass the Test Case.*

Step	***Test Procedure***	***Device***
1	GET the following object(s): » waterLevelSensorTableNumSensors.0	Pass / Fail (Clause 3.5.2.1.21.6)
2	Determine the RESPONSE VALUE for waterLevelSensorTableNumSensors.0. RECORD this information as: »Num_WaterLevel_Sensors	
3	FOR EACH value, N, from 1 to Num_WaterLevel_Sensors, perform Steps 3.1 through 3.2.	
3.1	GET the following object(s): »waterLevelSensorWarningLevel.N	Pass / Fail (Clause 3.5.2.1.21.6)
3.2	Determine the values for the retrieved information. RECORD this information as: »Sensor_Warning_Level[N] (the sensor warning level of the Nth water level sensor from the device)	
4	FOR EACH value, N, from 1 to Num_WaterLevel_Sensors, perform Steps 4.1 through 4.2.	
4.1	Determine a random value from 0 to 65535. RECORD this information as: »Sensor_Warning_Level_Random.N	
4.2	SET the following object(s) to the value(s) shown: »waterLevelSensorWarningLevel.N = Sensor_Model_Information_Random.N	Pass / Fail (Clause 3.5.2.21.6)
5	FOR EACH value, N, from 1 to Num_WaterLevel_Sensors, perform Steps 5.1 through 5.2.	
5.1	GET the following object(s): »waterLevelSensorWarningLevel.N	Pass / Fail (Clause 3.5.2.1.21.6)
5.2	VERIFY that the RESPONSE VALUE for waterLevelSensorWarningLevel.N is equal to Sensor_Warning_Level_Random.N.	Pass / Fail (Clause 5.8.21.3)
6	FOR EACH value, N, from 1 to Num_WaterLevel_Sensors, perform Steps 6.1 through 6.1.	
6.1	SET the following object(s) to the value(s) shown: »waterLevelSensorWarningLevel.N = Sensor_Warning_Level.N	Pass / Fail (Clause 3.5.2.21.6)
7	FOR EACH value, N, from 1 to Num_WaterLevel_Sensors, perform Steps 7.1 through 7.2.	
7.1	GET the following object(s): »waterLevelSensorWarningLevel.N	Pass / Fail (Clause 3.5.2.1.21.6)
7.2	VERIFY that the RESPONSE VALUE for waterLevelSensorWarningLevel.N is equal to Sensor_Warning_Level.N.	Pass / Fail (Clause 5.8.21.3)

© 2022 AASHTO / ITE / NEMA Copy Per TRF Distribution Permission

Test Case Results		
Tested By:	***Date Tested:***	***Pass / Fail***
Test Case Notes:		

© 2022 AASHTO / ITE / NEMA

C.2.3.2.46 Retrieve PTS Metadata - Location

Test Case: 2.46	***Title:***	*Retrieve Metadata for a PTS - Location*
	Description:	*This test case verifies that the ESS allows a management station to determine the location of a pavement treatment system*
	Variables:	
	Pass/Fail Criteria:	*The device under test (DUT) shall pass every verification step included within the Test Case in order to pass the Test Case.*

Step	***Test Procedure***	***Device***
1	GET the following object(s): »essPavementTreatmentLatitude.0 »essPavementTreatmentLongitude.0 »essPavementTreatmentLocation.0	Pass / Fail (Clause 3.5.2.1.21.1)
2	VERIFY that the RESPONSE VALUE for essPavementTreatmentLatitude.0 is greater than or equal to -90000000.	Pass / Fail (Clause 5.13.21)
3	VERIFY that the RESPONSE VALUE for essPavementTreatmentLatitude.0 is less than or equal to 90000001.	Pass / Fail (Clause 5.13.21)
4	VERIFY that the RESPONSE VALUE for essPavementTreatmentLatitude.0 is APPROPRIATE.	Pass / Fail (Clause 5.13.21)
5	VERIFY that the RESPONSE VALUE for essPavementTreatmentLongitude.0 is greater than or equal to -180000000.	Pass / Fail (Clause 5.13.22)
6	VERIFY that the RESPONSE VALUE for essPavementTreatmentLongitude.0 is less than or equal to 180000001.	Pass / Fail (Clause 5.13.22)
7	VERIFY that the RESPONSE VALUE for essPavementTreatmentLongitude.0 is APPROPRIATE.	Pass / Fail (Clause 5.13.22)
8	VERIFY that the RESPONSE VALUE for essPavementTreatmentLocation.0 is a valid DisplayString with no more than 255 characters.	Pass / Fail (Clause 5.13.23)
9	VERIFY that the RESPONSE VALUE for essPavementTreatmentLocation.0 is APPROPRIATE.	Pass / Fail (Clause 5.13.23)

Test Case Results

Tested By:	***Date Tested:***	***Pass / Fail***

Test Case Notes:

© 2022 AASHTO / ITE / NEMA

C.2.3.2.47 Retrieve PTS Metadata - Sensor Information

Test Case: 2.47	***Title:***	*Retrieve Metadata for a PTS - Sensor Information*
	Description:	*This test case verifies that the ESS allows a management station to determine the sensor information of the pavement treatment system*
	Variables:	
	Pass/Fail Criteria:	*The device under test (DUT) shall pass every verification step included within the Test Case in order to pass the Test Case.*

Step	***Test Procedure***	***Device***
1	GET the following object(s): »essPavementTreatmentModelInformation.0	Pass / Fail (Clause 3.5.2.1.21.2)
2	VERIFY that the RESPONSE VALUE for essPavementTreatmentModelInformation.0 is greater than or equal to 0.	Pass / Fail (Clause 5.13.24)
3	VERIFY that the RESPONSE VALUE for essPavementTreatmentModelInformation.N is less than or equal to 255.	Pass / Fail (Clause 5.13.24)
4	VERIFY that the RESPONSE VALUE for essPavementTreatmentModelInformation.N is APPROPRIATE.	Pass / Fail (Clause 5.13.24)

Test Case Results		
Tested By:	***Date Tested:***	***Pass / Fail***
Test Case Notes:		

© 2022 AASHTO / ITE / NEMA

C.2.3.2.48 Configure PTS Metadata - Location

Test Case: 2.48	***Title:***	*Configure PTS Metadata - Location*
	Description:	*This test case verifies that the ESS allows a management station to store location information regarding the pavement treatment system.*
	Variables:	
	Pass/Fail Criteria:	*The device under test (DUT) shall pass every verification step included within the Test Case in order to pass the Test Case.*

Step	***Test Procedure***	***Device***
1	GET the following object(s): »essPavementTreatmentLatitude.0 »essPavementTreatmentLongitude.0 »essPavementTreatmentLocation.0	Pass / Fail (Clause 3.5.2.1.21.3)
2	Determine the values for the retrieved information. RECORD this information as: »PTS_Latitude (the latitude of the pavement treatment system) »PTS_Longitude (the longitude of the pavement treatment system) »PTS_Location (the location of the pavement treatment system)	
3	Determine a random value from -90000000 to 90000001. RECORD this information as: »PTS_Latitude_Random	
4	Determine a random value from -180000000 to 180000001. RECORD this information as: »PTS_Longitude_Random	
5	Determine a random display string from 1 to 255 characters in length. RECORD this information as: »PTS_Location_Random	
6	SET the following object(s) to the value(s) shown: »essPavementTreatmentLatitude.0 = PTS_Latitude_Random »essPavementTreatmentLongitude.0 = PTS_Longitude_Random »essPavementTreatmentLocation.0 = PTS_Location_Random	Pass / Fail (Clause 3.5.2.1.21.3)
7	GET the following object(s): »essPavementTreatmentLatitude.0 »essPavementTreatmentLongitude.0 »essPavementTreatmentLocation.0	Pass / Fail (Clause 3.5.2.1.21.1)
5.2	VERIFY that the RESPONSE VALUE for essPavementTreatmentLatitude.0 is equal to PTS_Latitude_Random.	Pass / Fail (Clause 5.13.21)
5.3	VERIFY that the RESPONSE VALUE for essPavementTreatmentLongitude.0 is equal to PTS_Longitude_Random.	Pass / Fail (Clause 5.13.22)
5.4	VERIFY that the RESPONSE VALUE for essPavementTreatmentLocation.0 is equal to PTS_Location_Random	Pass / Fail (Clause 5.13.23)
6.1	SET the following object(s) to the value(s) shown: »essPavementTreatmentLatitude.0 = PTS_Latitude »essPavementTreatmentLongitude.0 = PTS_Longitude »essPavementTreatmentLocation.0 = PTS_Location	Pass / Fail (Clause 3.5.2.1.21.3)
7.1	GET the following object(s): »essPavementTreatmentLatitude.0 »essPavementTreatmentLongitude.0 »essPavementTreatmentLocation.0	Pass / Fail (Clause 3.5.2.1.21.1)

© 2022 AASHTO / ITE / NEMA Copy Per TRF Distribution Permission

7.2	VERIFY that the RESPONSE VALUE for essPavementTreatmentLatitude.0 is equal to PTS_Latitude.	Pass / Fail (Clause 5.13.21)
7.4	VERIFY that the RESPONSE VALUE for essPavementTreatmentLongitude.0 is equal to PTS_Longitude.	Pass / Fail (Clause 5.13.22)
7.5	VERIFY that the RESPONSE VALUE for essPavementTreatmentLocation.0 is equal to PTS_Location.	Pass / Fail (Clause 5.13.23)

Test Case Results		
Tested By:	***Date Tested:***	***Pass / Fail***
Test Case Notes:		

© 2022 AASHTO / ITE / NEMA

C.2.3.3 Weather Data Tests

C.2.3.3.1 Retrieve Weather Profile with Mobile Sources

Test Case: 3.1	***Title:***	*Retrieve Weather Profile with Mobile Sources*	
	Description:	*This test case verifies that the ESS allows a management station to retrieve a list of records recorded by the ESS over a period of time.*	
	Variables:	*Pressure_Supported*	*PRL 2.5.2.1.1*
		Wind_Supported	*PRL 2.5.2.1.2*
		Required_Wind_Sensors	*PRL 3.6.2*
		Temperature_Supported	*PRL 2.5.2.1.3*
		Required_Temp_Sensors	*PRL 3.6.3*
		Humidity_Supported	*PRL 2.5.2.1.4*
		Precip_Supported	*PRL 2.5.2.1.5*
		Required_Water_Level_Sensors	*PRL 3.6.22*
		Adjacent_Snow_Depth_Supported	*PRL 3.5.2.3.3.4*
		Roadway_Snow_Depth_Supported	*PRL 3.5.2.3.3.5*
		Ice_Thickness_Supported	*PRL 3.5.2.3.3.6*
		Precip_Rates_Supported	*PRL 3.5.2.3.2.6.2*
		Situation_Supported	*PRL 2.5.2.4*
		Visibility_Supported	*PRL 2.5.2.1.7*
		Radiation_Supported	*PRL 2.5.2.1.6*
	Pass/Fail Criteria:	*The device under test (DUT) shall pass every verification step included within the Test Case to pass the Test Case.*	

Step	***Test Procedure***	***Device***
1	CONFIGURE: Determine whether the ESS is required to monitor atmospheric pressure (PRL 2.5.2.1.1). RECORD this information as: »Pressure_Supported	
2	CONFIGURE: Determine the number of wind sensors supported. RECORD this information as: »Wind_Supported (whether the ESS is required to monitor winds—PRL 2.5.2.1.2) »Required_Wind_Sensors (the number of wind sensors that the ESS is required to support - PRL 3.6.2)	
3	CONFIGURE: Determine the number of temperature sensors supported. RECORD this information as: »Temperature_Supported (whether the ESS is required to monitor temperature—PRL 2.5.2.1.3) »Required_Temp_Sensors (the number of temperature sensors that the ESS is required to support—PRL 3.6.3) »Humidity_Supported (whether the ESS is required to monitor humidity—PRL 2.5.2.1.4)	

© 2022 AASHTO / ITE / NEMA

4	CONFIGURE: Determine the number of precipitation sensors supported. RECORD this information as: »Precip_Supported (whether the ESS is required to monitor precipitation—PRL 2.5.2.1.5) »Required_Water_Level_Sensors (the number of water level sensors that the ESS is required to support—PRL 3.6.22) »Adjacent_Snow_Depth_Supported (whether the ESS is required to monitor the adjacent snow depth—PRL 3.5.2.3.3.4) »Roadway_Snow_Depth_Supported (whether the ESS is required to monitor the roadway snow depth—PRL 3.5.2.3.3.5) »Ice_Thickness_Supported (whether the ESS is required to monitor the snow pack depth and ice thickness - PRL 3.5.2.3.3.6) »Precip_Rates_Supported (whether the ESS is required to monitor the precipitation rates—PRL 3.5.2.3.2.6.2)	
5	CONFIGURE: Determine whether the ESS is required to report situation data (PRL 2.5.2.4). RECORD this information as: »Situation_Supported	
6	CONFIGURE: Determine whether the ESS is required to provide visibility capabilities (PRL 2.5.2.1.7). RECORD this information as: »Visibility_Supported	
7	CONFIGURE: Determine whether the ESS is required to monitor solar radiation (PRL 2.5.2.1.6). RECORD this information as: »Radiation_Supported	
8	GET the following object(s): »essWeatherV3Block.0 »essLatitude.0 »essLongitude.0 »essVehicleSpeed.0 »essVehicleBearing.0 »essOdometer.0 »essReferenceHeight.0 »essMobileFriction.0 »essMobileObservationGroundState.0 »essMobileObservationPavement.0	Pass / Fail (Sec. 3.5.2.3.1)
9	Decode the essWeatherV3Block.0 structure.	
10	VERIFY that the essWeatherV3Block.0 structure was decoded without error.	Pass / Fail (Sec. 5.3.9)
11	IF Pressure_Supported is equal to true, then proceed to Step 11.1; otherwise, proceed to Step 12.	
11.1	VERIFY that the RESPONSE VALUE for the essAtmosphericPressure.0 field of the essWeatherV3Block.0 object is present.	Pass / Fail (Sec. 3.5.2.3.2.1)
11.2	VERIFY that the RESPONSE VALUE for essAtmosphericPressure.0 is between 0 and 65535, inclusive.	Pass / Fail (Sec. 5.5.4)
11.3	VERIFY that the RESPONSE VALUE for essAtmosphericPressure.0 is APPROPRIATE.	Pass / Fail (Sec. 5.5.4)
12	IF Wind_Supported is equal to true, then proceed to Step 12.1; otherwise, proceed to Step 13.	
12.1	VERIFY that the RESPONSE VALUE for the essWindData field of the essWeatherV3Block.0 object is present.	Pass / Fail (Sec. 3.5.2.3.2.2)
12.2	VERIFY that the essWindData field contains at least Required_Wind_Sensors entries.	Pass / Fail (Sec. 3.6.2)

Copy Per TRF Distribution Permission © 2022 AASHTO / ITE / NEMA

12.3	FOR EACH value, N, from 1 to Required_Wind_Sensors, perform Steps 12.3.1 through 12.3.21.	
12.3.1	VERIFY that the windSensorIndex.x field is present in the Nth essWindDataV3 structure.	Pass / Fail (Sec. 3.5.2.3.2.2)
12.3.2	VERIFY that the RESPONSE VALUE for windSensorIndex.x in the Nth essWindDataV3 structure is equal to N.	Pass / Fail (Sec. 5.6.10.1)
12.3.3	VERIFY that the windSensorAvgSpeed.x field is present in the Nth essWindDataV3 structure.	Pass / Fail (Sec. 3.5.2.3.2.2)
12.3.4	VERIFY that the RESPONSE VALUE for windSensorAvgSpeed.x in the Nth essWindDataV3 structure is between 0 and 65535, inclusive.	Pass / Fail (Sec. 5.6.10.2)
12.3.5	VERIFY that the RESPONSE VALUE for windSensorAvgSpeed.x is APPROPRIATE.	Pass / Fail (Sec. 5.6.10.2)
12.3.6	VERIFY that the windSensorAvgDirection.x field is present in the Nth essWindDataV3 structure.	Pass / Fail (Sec. 3.5.2.3.2.2)
12.3.7	VERIFY that the RESPONSE VALUE for windSensorAvgDirection.x in the Nth essWindDataV3 structure is between 0 and 361, inclusive.	Pass / Fail (Sec. 5.6.10.5)
12.3.8	VERIFY that the RESPONSE VALUE for windSensorAvgDirection.x is APPROPRIATE.	Pass / Fail (Sec. 5.6.10.5)
12.3.9	VERIFY that the windSensorSpotSpeed.x field is present in the Nth essWindDataV3 structure.	Pass / Fail (Sec. 3.5.2.3.2.2)
12.3.10	VERIFY that the RESPONSE VALUE for windSensorSpotSpeed.x in the Nth essWindDataV3 structure is between 0 and 65535, inclusive.	Pass / Fail (Sec. 5.6.10.6)
12.3.11	VERIFY that the RESPONSE VALUE for windSensorSpotSpeed.x is APPROPRIATE.	Pass / Fail (Sec. 5.6.10.6)
12.3.12	VERIFY that the windSensorSpotDirection.x field is present in the Nth essWindDataV3 structure.	Pass / Fail (Sec. 3.5.2.3.2.2)
12.3.13	VERIFY that the RESPONSE VALUE for windSensorSpotDirection.x in the Nth essWindDataV3 structure is between 0 and 361, inclusive.	Pass / Fail (Sec. 5.6.10.7)
12.3.14	VERIFY that the RESPONSE VALUE for windSensorSpotDirection.x is APPROPRIATE.	Pass / Fail (Sec. 5.6.10.7)
12.3.15	VERIFY that the windSensorGustSpeed.x field is present in the Nth essWindDataV3 structure.	Pass / Fail (Sec. 3.5.2.3.2.2)
12.3.16	VERIFY that the RESPONSE VALUE for windSensorGustSpeed.x in the Nth essWindDataV3 structure is between 0 and 65535, inclusive.	Pass / Fail (Sec. 5.6.10.8)
12.3.17	VERIFY that the RESPONSE VALUE for windSensorGustSpeed.x is APPROPRIATE.	Pass / Fail (Sec. 5.6.10.8)
12.3.18	VERIFY that the windSensorGustDirection.x field is present in the Nth essWindDataV3 structure.	Pass / Fail (Sec. 3.5.2.3.2.2)
12.3.19	VERIFY that the RESPONSE VALUE for windSensorGustDirection.x in the Nth essWindDataV3 structure is between 0 and 361, inclusive.	Pass / Fail (Sec. 5.6.10.9)
12.3.20	VERIFY that the RESPONSE VALUE for windSensorGustDirection.x is APPROPRIATE.	Pass / Fail (Sec. 5.6.10.9)

© 2022 AASHTO / ITE / NEMA Copy Per TRF Distribution Permission

12.3.21	IF Situation_Supported is equal to true, then proceed to Step 12.3.21.1; otherwise, proceed to Step 13.	
12.3.21.1	VERIFY that the windSensorSituation.x field is present in the Nth essWindDataV3 structure.	Pass / Fail (Sec. 3.5.2.3.5.1)
12.3.21.2	VERIFY that the RESPONSE VALUE for windSensorSituation.x in the Nth essWindDataV3 structure is between 1 and 12, inclusive.	Pass / Fail (Sec. 5.6.10.10)
12.3.21.3	VERIFY that the RESPONSE VALUE for windSensorSituation.x is APPROPRIATE.	Pass / Fail (Sec. 5.6.10.10)
13	IF Temperature_Supported is equal to true, then proceed to Step 13.1; otherwise, proceed to Step 14.	
13.1	VERIFY that the essTemperatureData field of the essWeatherV3Block object is present.	Pass / Fail (Sec. 3.5.2.3.2.3)
13.2	VERIFY that the RESPONSE VALUE for the essMaxTemp.0 field of the essTemperatureData field is present.	Pass / Fail (Sec. 3.5.2.3.2.4)
13.3	VERIFY that the RESPONSE VALUE for essMaxTemp.0 is between -1000 and 1001, inclusive.	Pass / Fail (Sec. 5.7.6)
13.4	VERIFY that the RESPONSE VALUE for essMaxTemp.0 is APPROPRIATE.	Pass / Fail (Sec. 5.7.6)
13.5	Determine the maximum temperature reading reported by the device. RECORD this information as: »Max_Temp	
13.6	VERIFY that the RESPONSE VALUE for the essMinTemp.0 field of the essTemperatureData field is present.	Pass / Fail (Sec. 3.5.2.3.2.4)
13.7	VERIFY that the RESPONSE VALUE for essMinTemp.0 is between -1000 and Max_Temp, inclusive.	Pass / Fail (Sec. 5.7.7)
13.8	VERIFY that the RESPONSE VALUE for essMinTemp.0 is APPROPRIATE.	Pass / Fail (Sec. 5.7.7)
13.9	IF Humidity_Supported is equal to 1, then proceed to Step 13.9.1; otherwise, proceed to Step 13.10.	
13.9.1	VERIFY that the RESPONSE VALUE for the essWetBulbTemp.0 field of the essTemperatureData field is present.	Pass / Fail (Sec. 3.5.2.3.2.5)
13.9.2	VERIFY that the RESPONSE VALUE for essWetBulbTemp.0 is between -1000 and 1001, inclusive.	Pass / Fail (Sec. 5.7.4)
13.9.3	VERIFY that the RESPONSE VALUE for essWetBulbTemp.0 is APPROPRIATE.	Pass / Fail (Sec. 5.7.4)
13.9.4	VERIFY that the RESPONSE VALUE for the essDewpointTemp.0 field of the essTemperatureData field is present.	Pass / Fail (Sec. 3.5.2.3.2.5)
13.9.5	VERIFY that the RESPONSE VALUE for essDewpointTemp.0 is between -1000 and 1001, inclusive.	Pass / Fail (Sec. 5.7.5)
13.9.6	VERIFY that the RESPONSE VALUE for essDewpointTemp.0 is APPROPRIATE.	Pass / Fail (Sec. 5.7.5)

Copy Per TRF Distribution Permission © 2022 AASHTO / ITE / NEMA

13.9.7	VERIFY that the RESPONSE VALUE for the essRelativeHumidity.0 field of the essTemperatureData field is present.	Pass / Fail (Sec. 3.5.2.3.2.5)
13.9.8	VERIFY that the RESPONSE VALUE for essRelativeHumidity.0 is between 0 and 101, inclusive.	Pass / Fail (Sec. 5.8.1)
13.9.9	VERIFY that the RESPONSE VALUE for essRelativeHumidity.0 is APPROPRIATE.	Pass / Fail (Sec. 5.8.1)
13.10	VERIFY that the temperatureTable field contains at least Required_Temp_Sensors entries.	Pass / Fail (Sec. 3.6.3)
13.11	FOR EACH value, N, from 1 to Required_Temp_Sensors, perform Steps 13.11.1 through 13.11.5.	
13.11.1	VERIFY that the RESPONSE VALUE for the essTemperatureSensorIndex.x field is present in the Nth Temperature structure.	Pass / Fail (Sec. 3.5.2.3.2.3)
13.11.2	VERIFY that the RESPONSE VALUE for the essTemperatureSensorIndex.x field in the Nth Temperature structure is equal to N.	Pass / Fail (Sec. 5.7.3.1)
13.11.3	VERIFY that the RESPONSE VALUE for the essAirTemperature.x field is present in the Nth Temperature structure.	Pass / Fail (Sec. 3.5.2.3.2.3)
13.11.4	VERIFY that the RESPONSE VALUE for essAirTemperature.x field in the Nth Temperature structure is between -1000 and 1001, inclusive.	Pass / Fail (Sec. 5.7.3.3)
13.11.5	VERIFY that the RESPONSE VALUE for essAirTemperature.x is APPROPRIATE.	Pass / Fail (Sec. 5.7.3.3)
14	IF Precip_Supported is equal to true, then proceed to Step 14.1; otherwise, proceed to Step 15.	
14.1	VERIFY that the RESPONSE VALUE for the essPrecipData field of the essWeatherV3Block.0 object is present.	Pass / Fail (Sec. 3.5.2.3.2.6.1)
14.2	VERIFY that the waterLevelSensorTable field contains at least Required_Water_Level_Sensors entries.	Pass / Fail (Sec. 3.6.22)
14.3	FOR EACH value, N, from 1 to Required_Water_Level_Sensors, perform Steps 14.3.1 through 14.3.5.	
14.3.1	VERIFY that the RESPONSE VALUE for the waterLevelSensorIndex.x field is present in the Nth WaterLevel structure.	Pass / Fail (Sec. 3.5.2.3.7)
14.3.2	VERIFY that the RESPONSE VALUE for the waterLevelSensorIndex.x field in the Nth WaterLevel structure is equal to N.	Pass / Fail (Sec. 5.8.21.1)
14.3.3	VERIFY that the RESPONSE VALUE for the waterLevelSensorReading.x field is present in the Nth WaterLevel structure.	Pass / Fail (Sec. 3.5.2.3.7)
14.3.4	VERIFY that the RESPONSE VALUE for waterLevelSensorReading.x field in the Nth WaterLevel structure is between 0 and 65535, inclusive.	Pass / Fail (Sec. 5.8.21.2)
14.3.5	VERIFY that the RESPONSE VALUE for waterLevelSensorReading.x is APPROPRIATE.	Pass / Fail (Sec. 5.8.21.2)
14.4	IF Adjacent_Snow_Depth_Supported is equal to 1, then proceed to Step 14.4.1; otherwise, proceed to Step 14.5.	
14.4.1	VERIFY that the RESPONSE VALUE for the essAdjacentSnowDepth.0 field of the essPrecipData field is present.	Pass / Fail (Sec. 3.5.2.3.3.4)

© 2022 AASHTO / ITE / NEMA
Copy Per TRF Distribution Permission

14.4.2	VERIFY that the RESPONSE VALUE for essAdjacentSnowDepth.0 is between 0 and 3001, inclusive.	Pass / Fail (Sec. 5.8.3)
14.4.3	VERIFY that the RESPONSE VALUE for essAdjacentSnowDepth.0 is APPROPRIATE.	Pass / Fail (Sec. 5.8.3)
14.5	IF Roadway_Snow_Depth_Supported is equal to 1, then proceed to Step 14.5.1; otherwise, proceed to Step 14.6.	
14.5.1	VERIFY that the RESPONSE VALUE for the essRoadwaySnowDepth.0 field of the essPrecipData field is present.	Pass / Fail (Sec. 3.5.2.3.3.5)
14.5.2	VERIFY that the RESPONSE VALUE for essRoadwaySnowDepth.0 is between 0 and 3001, inclusive.	Pass / Fail (Sec. 5.8.4)
14.5.3	VERIFY that the RESPONSE VALUE for essRoadwaySnowDepth.0 is APPROPRIATE.	Pass / Fail (Sec. 5.8.4)
14.6	IF Ice_Thickness_Supported is equal to 1, then proceed to Step 14.6.1; otherwise, proceed to Step 14.7.	
14.6.1	VERIFY that the RESPONSE VALUE for the essRoadwaySnowPackDepth.0 field of the essPrecipData field is present.	Pass / Fail (Sec. 3.5.2.3.3.6)
14.6.2	VERIFY that the RESPONSE VALUE for essRoadwaySnowPackDepth.0 is between 0 and 3001, inclusive.	Pass / Fail (Sec. 5.8.5)
14.6.3	VERIFY that the RESPONSE VALUE for essRoadwaySnowPackDepth.0 is APPROPRIATE.	Pass / Fail (Sec. 5.8.5)
14.6.4	VERIFY that the RESPONSE VALUE for the essIceThickness.0 field of the essPrecipData field is present.	Pass / Fail (Sec. 3.5.2.3.3.6)
14.6.5	VERIFY that the RESPONSE VALUE for essIceThickness.0 is between 0 and 65535, inclusive.	Pass / Fail (Sec. 5.8.10)
14.6.6	VERIFY that the RESPONSE VALUE for essIceThickness.0 is APPROPRIATE.	Pass / Fail (Sec. 5.8.10)
14.7	VERIFY that the RESPONSE VALUE for the essPrecipYesNo.0 field of the essPrecipData field is present.	Pass / Fail (Sec. 3.5.2.3.2.6.1)
14.8	VERIFY that the RESPONSE VALUE for essPrecipYesNo.0 is between 1 and 3, inclusive.	Pass / Fail (Sec. 5.8.6)
14.9	VERIFY that the RESPONSE VALUE for essPrecipYesNo.0 is APPROPRIATE.	Pass / Fail (Sec. 5.8.6)
14.10	IF Precip_Rates_Supported is equal to 1, then proceed to Step 14.10.1; otherwise, proceed to Step 14.11.	
14.10.1	VERIFY that the RESPONSE VALUE for the essPrecipRate.0 field of the essPrecipData field is present.	Pass / Fail (Sec. 3.5.2.3.2.6.2)
14.10.2	VERIFY that the RESPONSE VALUE for essPrecipRate.0 is between 0 and 65535, inclusive.	Pass / Fail (Sec. 5.8.7)
14.10.3	VERIFY that the RESPONSE VALUE for essPrecipRate.0 is APPROPRIATE.	Pass / Fail (Sec. 5.8.7)
14.10.4	VERIFY that the RESPONSE VALUE for the essSnowfallAccumRate.0 field of the essPrecipData field is present.	Pass / Fail (Sec. 3.5.2.3.2.6.2)

© 2022 AASHTO / ITE / NEMA

14.10.5	VERIFY that the RESPONSE VALUE for essSnowfallAccumRate.0 is between 0 and 65535, inclusive.	Pass / Fail (Sec. 5.8.8)
14.10.6	VERIFY that the RESPONSE VALUE for essSnowfallAccumRate.0 is APPROPRIATE.	Pass / Fail (Sec. 5.8.8)
14.10.7	VERIFY that the RESPONSE VALUE for the essPrecipitationStartTime.0 field of the essPrecipData field is present.	Pass / Fail (Sec. 3.5.2.3.2.6.2)
14.10.8	VERIFY that the RESPONSE VALUE for essPrecipitationStartTime.0 is between 0 and 4294967295, inclusive.	Pass / Fail (Sec. 5.8.11)
14.10.9	VERIFY that the RESPONSE VALUE for essPrecipitationStartTime.0 is APPROPRIATE.	Pass / Fail (Sec. 5.8.11)
14.10.10	VERIFY that the RESPONSE VALUE for the essPrecipitationEndTime.0 field of the essPrecipData field is present.	Pass / Fail (Sec. 3.5.2.3.2.6.2)
14.10.11	VERIFY that the RESPONSE VALUE for essPrecipitationEndTime.0 is between 0 and 4294967295, inclusive.	Pass / Fail (Sec. 5.8.12)
14.10.12	VERIFY that the RESPONSE VALUE for essPrecipitationEndTime.0 is APPROPRIATE.	Pass / Fail (Sec. 5.8.12)
14.11	IF Situation_Supported is equal to true, then proceed to Step 14.11.1; otherwise, proceed to Step 15.	
14.11.1	VERIFY that the RESPONSE VALUE for the essPrecipSituation.0 field of the essPrecipData field is present.	Pass / Fail (Sec. 3.5.2.3.5.2)
14.11.2	VERIFY that the RESPONSE VALUE for essPrecipSituation.0 is between 1 and 15, inclusive.	Pass / Fail (Sec. 5.8.9)
14.11.3	VERIFY that the RESPONSE VALUE for essPrecipSituation.0 is APPROPRIATE.	Pass / Fail (Sec. 5.8.9)
15	IF Visibility_Supported is equal to true, then proceed to Step 15.1; otherwise, proceed to Step 16.	
15.1	VERIFY that the RESPONSE VALUE for the essVisibilityData field of the essWeatherV3Block.0 object is present.	Pass / Fail (Sec. 3.5.2.3.2.8)
15.2	VERIFY that the RESPONSE VALUE for the essVisibility.0 field of the essVisibilityDataV3 field is present.	Pass / Fail (Sec. 3.5.2.3.2.8)
15.3	VERIFY that the RESPONSE VALUE for essVisibility.0 is between 0 and 1000001, inclusive.	Pass / Fail (Sec. 5.10.1)
15.4	VERIFY that the RESPONSE VALUE for essVisibility.0 is APPROPRIATE.	Pass / Fail (Sec. 5.10.1)
15.5	IF Situation_Supported is equal to true, then proceed to Step 15.5.1; otherwise, proceed to Step 16.	
15.5.1	VERIFY that the RESPONSE VALUE for the essVisibilitySituation.0 field of the essVisibilityDataV3 field is present.	Pass / Fail (Sec. 3.5.2.3.5.4)
15.5.2	VERIFY that the RESPONSE VALUE for essVisibilitySituation.0 is between 1 and 12, inclusive.	Pass / Fail (Sec. 5.10.2)
15.5.3	VERIFY that the RESPONSE VALUE for essVisibilitySituation.0 is APPROPRIATE.	Pass / Fail (Sec. 5.10.2)

© 2022 AASHTO / ITE / NEMA

16	IF Radiation_Supported is equal to 1, then proceed to Step 16.1; otherwise, proceed to Step 17.	
16.1	VERIFY that the RESPONSE VALUE for the essRadiationData field of the essWeatherV3Block.0 object is present.	Pass / Fail (Sec. 3.5.2.3.2.7)
16.2	VERIFY that the RESPONSE VALUE for the essTotalSun.0 field of the essRadiationData field is present.	Pass / Fail (Sec. 3.5.2.3.2.7)
16.3	VERIFY that the RESPONSE VALUE for essTotalSun.0 is between 0 and 1441, inclusive.	Pass / Fail (Sec. 5.9.2)
16.4	VERIFY that the RESPONSE VALUE for essTotalSun.0 is APPROPRIATE.	Pass / Fail (Sec. 5.9.2)
16.5	VERIFY that the RESPONSE VALUE for the essInstantaneousTerrestrialRadiation.0 field of the essRadiationData field is present.	Pass / Fail (Sec. 3.5.2.3.2.7)
16.6	VERIFY that the RESPONSE VALUE for essInstantaneousTerrestrialRadiation.0 is between -2048 and 2049, inclusive.	Pass / Fail (Sec. 5.9.4)
16.7	VERIFY that the RESPONSE VALUE for essInstantaneousTerrestrialRadiation.0 is APPROPRIATE.	Pass / Fail (Sec. 5.9.4)
16.8	VERIFY that the RESPONSE VALUE for the essInstantaneousSolarRadiation.0 field of the essRadiationData field is present.	Pass / Fail (Sec. 3.5.2.3.2.7)
16.9	VERIFY that the RESPONSE VALUE for essInstantaneousSolarRadiation.0 is between -2048 and 2049, inclusive.	Pass / Fail (Sec. 5.9.5)
16.10	VERIFY that the RESPONSE VALUE for essInstantaneousSolarRadiation.0 is APPROPRIATE.	Pass / Fail (Sec. 5.9.5)
16.11	VERIFY that the RESPONSE VALUE for the essTotalRadiation.0 field of the essRadiationData field is present.	Pass / Fail (Sec. 3.5.2.3.2.7)
16.12	VERIFY that the RESPONSE VALUE for essTotalRadiation.0 is between -2048 and 2049, inclusive.	Pass / Fail (Sec. 5.9.6)
16.13	VERIFY that the RESPONSE VALUE for essTotalRadiation.0 is APPROPRIATE.	Pass / Fail (Sec. 5.9.6)
16.14	VERIFY that the RESPONSE VALUE for the essTotalRadiationPeriod.0 field of the essRadiationData field is present.	Pass / Fail (Sec. 3.5.2.3.2.7)
16.15	VERIFY that the RESPONSE VALUE for essTotalRadiationPeriod.0 is between 0 and 86400, inclusive.	Pass / Fail (Sec. 5.9.7)
16.16	VERIFY that the RESPONSE VALUE for essTotalRadiationPeriod.0 is APPROPRIATE.	Pass / Fail (Sec. 5.9.7)
16.17	IF Situation_Supported is equal to true, then proceed to Step 16.17.1; otherwise, proceed to Step 17.	
16.17.1	VERIFY that the RESPONSE VALUE for the essCloudSituation.0 field of the essVisibilityDataV3 field is present.	Pass / Fail (Sec. 3.5.2.3.5.3)
16.17.2	VERIFY that the RESPONSE VALUE for essCloudSituation.0 is between 1 and 5, inclusive.	Pass / Fail (Sec. 5.9.3)
16.17.3	VERIFY that the RESPONSE VALUE for essCloudSituation.0 is APPROPRIATE.	Pass / Fail (Sec. 5.9.3)

© 2022 AASHTO / ITE / NEMA

17	VERIFY that the RESPONSE VALUE for essLatitude.0 is greater than or equal to -90000000.	Pass / Fail (Sec. 5.4.1)
18	VERIFY that the RESPONSE VALUE for essLatitude.0 is less than or equal to 90000001.	Pass / Fail (Sec. 5.4.1)
19	VERIFY that the RESPONSE VALUE for essLatitude.0 is APPROPRIATE.	Pass / Fail (Sec. 5.4.1)
20	VERIFY that the RESPONSE VALUE for essLongitude.0 is greater than or equal to -180000000.	Pass / Fail (Sec. 5.4.2)
21	VERIFY that the RESPONSE VALUE for essLongitude.0 is less than or equal to 180000001.	Pass / Fail (Sec. 5.4.2)
22	VERIFY that the RESPONSE VALUE for essLongitude.0 is APPROPRIATE.	Pass / Fail (Sec. 5.4.2)
23	VERIFY that the RESPONSE VALUE for essVehicleSpeed.0 is greater than or equal to 0.	Pass / Fail (Sec. 5.4.3)
24	VERIFY that the RESPONSE VALUE for essVehicleSpeed.0 is less than or equal to 255.	Pass / Fail (Sec. 5.4.3)
25	VERIFY that the RESPONSE VALUE for essVehicleSpeed.0 is APPROPRIATE.	Pass / Fail (Sec. 5.4.3)
26	VERIFY that the RESPONSE VALUE for essVehicleBearing.0 is greater than or equal to 0.	Pass / Fail (Sec. 5.4.4)
27	VERIFY that the RESPONSE VALUE for essVehicleBearing.0 is less than or equal to 361.	Pass / Fail (Sec. 5.4.4)
28	VERIFY that the RESPONSE VALUE for essVehicleBearing.0 is APPROPRIATE.	Pass / Fail (Sec. 5.4.4)
29	VERIFY that the RESPONSE VALUE for essOdometer.0 is greater than or equal to 0.	Pass / Fail (Sec. 5.4.5)
30	VERIFY that the RESPONSE VALUE for essOdometer.0 is less than or equal to 4294967295.	Pass / Fail (Sec. 5.4.5)
31	VERIFY that the RESPONSE VALUE for essOdometer.0 is APPROPRIATE.	Pass / Fail (Sec. 5.4.5)
32	VERIFY that the RESPONSE VALUE for essReferenceHeight.0 is greater than or equal to -400.	Pass / Fail (Sec. 5.5.1)
33	VERIFY that the RESPONSE VALUE for essReferenceHeight.0 is less than or equal to 8001.	Pass / Fail (Sec. 5.5.1)
34	VERIFY that the RESPONSE VALUE for essReferenceHeight.0 is APPROPRIATE.	Pass / Fail (Sec. 5.5.1)
35	VERIFY that the RESPONSE VALUE for essMobileFriction.0 is greater than or equal to 0.	Pass / Fail (Sec. 5.12.1)
36	VERIFY that the RESPONSE VALUE for essMobileFriction.0 is less than or equal to 101.	Pass / Fail (Sec. 5.12.1)
37	VERIFY that the RESPONSE VALUE for essMobileFriction.0 is APPROPRIATE.	Pass / Fail (Sec. 5.12.1)

© 2022 AASHTO / ITE / NEMA Copy Per TRF Distribution Permission

38	VERIFY that the RESPONSE VALUE for essMobileObservationGroundState.0 is greater than or equal to 1.	Pass / Fail (Sec. 5.12.2)
39	VERIFY that the RESPONSE VALUE for essMobileObservationGroundState.0 is less than or equal to 18.	Pass / Fail (Sec. 5.12.2)
40	VERIFY that the RESPONSE VALUE for essMobileObservationGroundState.0 is APPROPRIATE.	Pass / Fail (Sec. 5.12.2)
41	VERIFY that the RESPONSE VALUE for essMobileObservationPavement.0 is greater than or equal to 1.	Pass / Fail (Sec. 5.12.3)
42	VERIFY that the RESPONSE VALUE for essMobileObservationPavement.0 is less than or equal to 25.	Pass / Fail (Sec. 5.12.3)
43	VERIFY that the RESPONSE VALUE for essMobileObservationPavement.0 is APPROPRIATE.	Pass / Fail (Sec. 5.12.3)

Test Case Results		
Tested By:	***Date Tested:***	***Pass / Fail***
Test Case Notes:		

© 2022 AASHTO / ITE / NEMA

C.2.3.3.2 Retrieve Atmospheric Pressure [Versions 01 to 03]

Test Case: 3.2	***Title:***	*Retrieve Atmospheric Pressure [Versions 01 to 03]*
	Description:	*This test case verifies that the ESS allows a management station to determine the current atmospheric pressure.*
	Variables:	
	Pass/Fail Criteria:	*The device under test (DUT) shall pass every verification step included within the Test Case to pass the Test Case.*

Step	***Test Procedure***	***Device***
1	GET the following object(s): »essAtmosphericPressure.0	Pass / Fail (Sec. 3.5.2.3.2.1)
2	VERIFY that the RESPONSE VALUE for essAtmosphericPressure.0 is greater than or equal to 0.	Pass / Fail (Sec. 5.5.4)
3	VERIFY that the RESPONSE VALUE for essAtmosphericPressure.0 is less than or equal to 65535.	Pass / Fail (Sec. 5.5.4)
4	VERIFY that the RESPONSE VALUE for essAtmosphericPressure.0 is APPROPRIATE.	Pass / Fail (Sec. 5.5.4)

Test Case Results

Tested By:	***Date Tested:***	***Pass / Fail***

Test Case Notes:

© 2022 AASHTO / ITE / NEMA

C.2.3.3.3 Retrieve Wind Data

Test Case: 3.3	***Title:***	*Retrieve Wind Data*	
	Description:	*This test case verifies that the ESS allows a management station to determine current wind information.*	
	Variables:	*Required_Wind_Sensors*	*PRL 3.6.2*
	Pass/Fail Criteria:	*The device under test (DUT) shall pass every verification step included within the Test Case to pass the Test Case.*	

Step	***Test Procedure***	***Device***
1	CONFIGURE: Determine the number of wind sensors required by the specification (PRL 3.6.2). RECORD this information as: »Required_Wind_Sensors	
2	GET the following object(s): »windSensorTableNumSensors.0	Pass / Fail (Sec. 3.5.2.3.2.2)
3	VERIFY that the RESPONSE VALUE for windSensorTableNumSensors.0 is greater than or equal to Required_Wind_Sensors.	Pass / Fail (Sec. 3.6.2)
4	Determine the RESPONSE VALUE for windSensorTableNumSensors.0. RECORD this information as: »Supported_Wind_Sensors	
5	FOR EACH value, N, from 1 to Supported_Wind_Sensors, perform Steps 5.1 through 5.22.	
5.1	GET the following object(s): »windSensorAvgSpeed.N »windSensorAvgDirection.N »windSensorSpotSpeed.N »windSensorSpotDirection.N »windSensorGustSpeed.N »windSensorGustDirection.N »windSensorSituation.N	Pass / Fail (Sec. 3.5.2.3.2.2)
5.2	VERIFY that the RESPONSE VALUE for windSensorAvgSpeed.N is greater than or equal to 0.	Pass / Fail (Sec. 5.6.10.4)
5.3	VERIFY that the RESPONSE VALUE for windSensorAvgSpeed.N is less than or equal to 65535.	Pass / Fail (Sec. 5.6.10.4)
5.4	VERIFY that the RESPONSE VALUE for windSensorAvgSpeed.N is APPROPRIATE.	Pass / Fail (Sec. 5.6.10.4)
5.5	VERIFY that the RESPONSE VALUE for windSensorAvgDirection.N is greater than or equal to 0.	Pass / Fail (Sec. 5.6.10.5)
5.6	VERIFY that the RESPONSE VALUE for windSensorAvgDirection.N is less than or equal to 361.	Pass / Fail (Sec. 5.6.10.5)
5.7	VERIFY that the RESPONSE VALUE for windSensorAvgDirection.N is APPROPRIATE.	Pass / Fail (Sec. 5.6.10.5)
5.8	VERIFY that the RESPONSE VALUE for windSensorSpotSpeed.N is greater than or equal to 0.	Pass / Fail (Sec. 5.6.10.6)
5.9	VERIFY that the RESPONSE VALUE for windSensorSpotSpeed.N is less than or equal to 65535.	Pass / Fail (Sec. 5.6.10.6)

Copy Per TRF Distribution Permission © 2022 AASHTO / ITE / NEMA

5.10	VERIFY that the RESPONSE VALUE for windSensorSpotSpeed.N is APPROPRIATE.	Pass / Fail (Sec. 5.6.10.6)
5.11	VERIFY that the RESPONSE VALUE for windSensorSpotDirection.N is greater than or equal to 0.	Pass / Fail (Sec. 5.6.10.7)
5.12	VERIFY that the RESPONSE VALUE for windSensorSpotDirection.N is less than or equal to 361.	Pass / Fail (Sec. 5.6.10.7)
5.13	VERIFY that the RESPONSE VALUE for windSensorSpotDirection.N is APPROPRIATE.	Pass / Fail (Sec. 5.6.10.7)
5.14	VERIFY that the RESPONSE VALUE for windSensorGustSpeed.N is greater than or equal to 0.	Pass / Fail (Sec. 5.6.10.8)
5.15	VERIFY that the RESPONSE VALUE for windSensorGustSpeed.N is less than or equal to 65535.	Pass / Fail (Sec. 5.6.10.8)
5.16	VERIFY that the RESPONSE VALUE for windSensorGustSpeed.N is APPROPRIATE.	Pass / Fail (Sec. 5.6.10.8)
5.17	VERIFY that the RESPONSE VALUE for windSensorGustDirection.N is greater than or equal to 0.	Pass / Fail (Sec. 5.6.10.9)
5.18	VERIFY that the RESPONSE VALUE for windSensorGustDirection.N is less than or equal to 361.	Pass / Fail (Sec. 5.6.10.9)
5.19	VERIFY that the RESPONSE VALUE for windSensorGustDirection.N is APPROPRIATE.	Pass / Fail (Sec. 5.6.10.9)
5.20	VERIFY that the RESPONSE VALUE for windSensorSituation.N is greater than or equal to 1.	Pass / Fail (Sec. 5.6.10.10)
5.21	VERIFY that the RESPONSE VALUE for windSensorSituation.N is less than or equal to 12.	Pass / Fail (Sec. 5.6.10.10)
5.22	VERIFY that the RESPONSE VALUE for windSensorSituation.N is APPROPRIATE.	Pass / Fail (Sec. 5.6.10.10)

Test Case Results

Tested By:	***Date Tested:***	***Pass / Fail***

Test Case Notes:

© 2022 AASHTO / ITE / NEMA

C.2.3.3.4 Retrieve Temperature

Test Case: 3.4	***Title:***	*Retrieve Air Temperature*	
	Description:	*This test case verifies that the ESS allows a management station to determine the current temperature from a temperature sensor.*	
	Variables:	*Required_Temperature_Sensors*	*PRL 3.6.3*
	Pass/Fail Criteria:	*The device under test (DUT) shall pass every verification step included within the Test Case to pass the Test Case.*	

Step	***Test Procedure***	***Device***
1	CONFIGURE: Determine the number of temperature sensors required by the specification (PRL 3.6.3). RECORD this information as: »Required_Temperature_Sensors	
2	GET the following object(s): »essNumTemperatureSensors.0	Pass / Fail (RFC 1157)
3	VERIFY that the RESPONSE VALUE for essNumTemperatureSensors.0 is greater than or equal to Required_Temperature_Sensors.	Pass / Fail (Sec. 3.6.3)
4	Determine a random number between 1 and Required_Temperature_Sensors. RECORD this information as: »Subject_Sensor	
5	GET the following object(s): »essAirTemperature.Subject_Sensor	Pass / Fail (Sec. 3.5.2.3.2.3)
6	VERIFY that the RESPONSE VALUE for essAirTemperature.Subject_Sensor is greater than or equal to -1000.	Pass / Fail (Sec. 5.7.3.3)
7	VERIFY that the RESPONSE VALUE for essAirTemperature.Subject_Sensor is less greater than or equal to 1000.	Pass / Fail (Sec. 5.7.3.3)
8	VERIFY that the RESPONSE VALUE for essAirTemperature.Subject_Sensor is APPROPRIATE.	Pass / Fail (Sec. 5.7.3.3)

Test Case Results		
Tested By:	***Date Tested:***	***Pass / Fail***
Test Case Notes:		

© 2022 AASHTO / ITE / NEMA

C.2.3.3.5 Retrieve Daily Minimum and Maximum Temperature

Test Case: 3.5	***Title:***	*Retrieve Daily Minimum and Maximum Temperature*
	Description:	*This test case verifies that the ESS allows a management station to determine the minimum and maximum temperatures recorded during the previous 24 hours.*
	Variables:	
	Pass/Fail Criteria:	*The device under test (DUT) shall pass every verification step included within the Test Case to pass the Test Case.*

Step	***Test Procedure***	***Device***
1	GET the following object(s): »essMaxTemp.0 »essMinTemp.0	Pass / Fail (Sec. 3.5.2.3.2.4)
2	VERIFY that the RESPONSE VALUE for essMinTemp.0 is greater than or equal to -1000.	Pass / Fail (Sec. 5.7.7)
3	VERIFY that the RESPONSE VALUE for essMinTemp.0 is less than or equal to 1001.	Pass / Fail (Sec. 5.7.7)
4	VERIFY that the RESPONSE VALUE for essMaxTemp.0 is APPROPRIATE.	Pass / Fail (Sec. 5.7.7)
5	Determine the RESPONSE VALUE for essMinTemp.0. RECORD this information as: »Minimum_Temp	
6	VERIFY that the RESPONSE VALUE for essMaxTemp.0 is greater than or equal to Minimum_Temp.	Pass / Fail (Sec. 5.7.6)
7	VERIFY that the RESPONSE VALUE for essMaxTemp.0 is less than or equal to 1001.	Pass / Fail (Sec. 5.7.6)
8	VERIFY that the RESPONSE VALUE for essMinTemp.0 is APPROPRIATE.	Pass / Fail (Sec. 5.7.6)

Test Case Results		
Tested By:	***Date Tested:***	***Pass / Fail***
Test Case Notes:		

© 2022 AASHTO / ITE / NEMA

C.2.3.3.6 Retrieve Humidity [Versions 01 to 03]

Test Case: 3.6	***Title:***	*Retrieve Humidity [Versions 01 to 03]*
	Description:	*This test case verifies that the ESS allows a management station to determine the current humidity information.*
	Variables:	
	Pass/Fail Criteria:	*The device under test (DUT) shall pass every verification step included within the Test Case to pass the Test Case.*

Step	***Test Procedure***	***Device***
1	GET the following object(s): »essWetbulbTemp.0 »essDewpointTemp.0 »essRelativeHumidity.0	Pass / Fail (Sec. 3.5.2.3.2.5)
2	VERIFY that the RESPONSE VALUE for essWetbulbTemp.0 is greater than or equal to -1000.	Pass / Fail (Sec. 5.7.4)
3	VERIFY that the RESPONSE VALUE for essWetbulbTemp.0 is less than or equal to 1001.	Pass / Fail (Sec. 5.7.4)
4	VERIFY that the RESPONSE VALUE for essWetbulbTemp.0 is APPROPRIATE.	Pass / Fail (Sec. 5.7.4)
5	VERIFY that the RESPONSE VALUE for essDewpointTemp.0 is greater than or equal to -1000.	Pass / Fail (Sec. 5.7.5)
6	VERIFY that the RESPONSE VALUE for essDewpointTemp.0 is less than or equal to 1001.	Pass / Fail (Sec. 5.7.5)
7	VERIFY that the RESPONSE VALUE for essDewpointTemp.0 is APPROPRIATE.	Pass / Fail (Sec. 5.7.5)
8	VERIFY that the RESPONSE VALUE for essRelativeHumidity.0 is greater than or equal to 0.	Pass / Fail (Sec. 5.8.1)
9	VERIFY that the RESPONSE VALUE for essRelativeHumidity.0 is less than or equal to 101.	Pass / Fail (Sec. 5.8.1)
10	VERIFY that the RESPONSE VALUE for essRelativeHumidity.0 is APPROPRIATE.	Pass / Fail (Sec. 5.8.1)

Test Case Results		
Tested By:	***Date Tested:***	***Pass / Fail***
Test Case Notes:		

© 2022 AASHTO / ITE / NEMA

C.2.3.3.7 Retrieve Precipitation Presence [Versions 01 to 03]

Test Case: 3.7	***Title:***	*Retrieve Precipitation Presence [Versions 01 to 03]*
	Description:	*This test case verifies that the ESS allows a management station to determine the presence of precipitation and the make and model of the device sensor.*
	Variables:	Device_Version Test Plan
	Pass/Fail Criteria:	*The device under test (DUT) shall pass every verification step included within the Test Case to pass the Test Case.*

Step	***Test Procedure***	***Device***
1	CONFIGURE: Determine the version of the NTCIP 1204 standard to which the ESS claims conformance (Test Plan). RECORD this information as: »Device_Version	
2	GET the following object(s): »globalMaxModules.0	Pass / Fail (RFC 1157)
3	Determine the RESPONSE VALUE for globalMaxModules.0. RECORD this information as: »Num_Modules	
4	GET the following object(s): »essPrecipYesNo.0 »precipitationSensorModelInformation.0	Pass / Fail (Sec. 3.5.2.3.2.6.14.2.12)
5	VERIFY that the RESPONSE VALUE for essPrecipYesNo.0 is greater than or equal to 1.	Pass / Fail (Sec. 5.8.6)
6	VERIFY that the RESPONSE VALUE for essPrecipYesNo.0 is less than or equal to 3.	Pass / Fail (Sec. 5.8.6)
7	VERIFY that the RESPONSE VALUE for essPrecipYesNo.0 is APPROPRIATE.	Pass / Fail (Sec. 5.8.6)
8	IF Device_Version is greater than 1, then proceed to Step 8.1; otherwise, proceed to Step 9.	
8.1	GET the following object(s): »precipitationSensorModelInformation.0	Pass / Fail (Sec. 4.2.12)
8.2	VERIFY that the RESPONSE VALUE for precipitationSensorModelInformation.0 is greater than or equal to 1.	Pass / Fail (Sec. 5.8.18)
8.3	VERIFY that the RESPONSE VALUE for precipitationSensorModelInformation.0 is less than or equal to Num_Modules.	Pass / Fail (Sec. 5.8.18)
8.4	VERIFY that the RESPONSE VALUE for precipitationSensorModelInformation.0 is APPROPRIATE.	Pass / Fail (Sec. 5.8.18)
9	GET the following object(s): »precipitationSensorModelInformation.0 VERIFY that the RESPONSE ERROR is equal to ‘NoSuchName’.	Pass / Fail (RFC 1157)

Test Case Results		
Tested By:	***Date Tested:***	***Pass / Fail***
Test Case Notes:		

© 2022 AASHTO / ITE / NEMA

Copy Per TRF Distribution Permission

© 2022 AASHTO / ITE / NEMA

C.2.3.3.8 Retrieve Precipitation Rates [Versions 01 to 03]

Test Case: 3.8	***Title:***	*Retrieve Precipitation Rates [Versions 01 to 03]*
	Description:	*This test case verifies that the ESS allows a management station to determine the rate at which precipitation is falling and the most recent start and stop times of precipitation.*
	Variables:	
	Pass/Fail Criteria:	*The device under test (DUT) shall pass every verification step included within the Test Case to pass the Test Case.*

Step	***Test Procedure***	***Device***
1	GET the following object(s): »essPrecipRate.0 »essSnowfallAccumRate.0 »essPrecipitationStartTime.0 »essPrecipitationEndTime.0	Pass / Fail (Section 3.5.2.3.2.6.2)
2	VERIFY that the RESPONSE VALUE for essPrecipRate.0 is greater than or equal to 0.	Pass / Fail (Sec. 5.8.7)
3	VERIFY that the RESPONSE VALUE for essPrecipRate.0 is less than or equal to 65535.	Pass / Fail (Sec. 5.8.7)
4	VERIFY that the RESPONSE VALUE for essPrecipRate.0 is APPROPRIATE.	Pass / Fail (Sec. 5.8.7)
5	VERIFY that the RESPONSE VALUE for essSnowfallAccumRate.0 is greater than or equal to 0.	Pass / Fail (Sec. 5.8.8)
6	VERIFY that the RESPONSE VALUE for essSnowfallAccumRate.0 is less than or equal to 65535.	Pass / Fail (Sec. 5.8.8)
7	VERIFY that the RESPONSE VALUE for essSnowfallAccumRate.0 is APPROPRIATE.	Pass / Fail (Sec. 5.8.8)
8	VERIFY that the RESPONSE VALUE for essPrecipitationStartTime.0 is greater than or equal to 0.	Pass / Fail (Sec. 5.8.11)
9	VERIFY that the RESPONSE VALUE for essPrecipitationStartTime.0 is less than or equal to 4294967295.	Pass / Fail (Sec. 5.8.11)
10	VERIFY that the RESPONSE VALUE for essPrecipitationStartTime.0 is APPROPRIATE.	Pass / Fail (Sec. 5.8.11)
11	VERIFY that the RESPONSE VALUE for essPrecipitationEndTime.0 is greater than or equal to 0.	Pass / Fail (Sec. 5.8.12)
12	VERIFY that the RESPONSE VALUE for essPrecipitationEndTime.0 is less than or equal to 4294967295.	Pass / Fail (Sec. 5.8.12)
13	VERIFY that the RESPONSE VALUE for essPrecipitationEndTime.0 is APPROPRIATE.	Pass / Fail (Sec. 5.8.12)

Test Case Results		
Tested By:	***Date Tested:***	***Pass / Fail***
Test Case Notes:		

© 2022 AASHTO / ITE / NEMA

C.2.3.3.9 Retrieve Precipitation Totals [Versions 01 to 03]

Test Case: 3.9	***Title:***	*Retrieve Precipitation Totals [Versions 01 to 03]*
	Description:	*This test case verifies that the ESS allows a management station to determine the total amounts of precipitation recorded during previous standardized time intervals.*
	Variables:	
	Pass/Fail Criteria:	*The device under test (DUT) shall pass every verification step included within the Test Case to pass the Test Case.*

Step	***Test Procedure***	***Device***
1	GET the following object(s): »essPrecipitationOneHour.0 »essPrecipitationThreeHours.0 »essPrecipitationSixHours.0 »essPrecipitationTwelveHours.0 »essPrecipitation24Hours.0	Pass / Fail (Sec. 3.5.2.3.2.6.3)
2	VERIFY that the RESPONSE VALUE for essPrecipitationOneHour.0 is greater than or equal to 0.	Pass / Fail (Sec. 5.8.13)
3	VERIFY that the RESPONSE VALUE for essPrecipitationOneHour.0 is less than or equal to 65535.	Pass / Fail (Sec. 5.8.13)
4	VERIFY that the RESPONSE VALUE for essPrecipitationOneHour.0 is APPROPRIATE.	Pass / Fail (Sec. 5.8.13)
5	VERIFY that the RESPONSE VALUE for essPrecipitationThreeHours.0 is greater than or equal to 0.	Pass / Fail (Sec. 5.8.14)
6	VERIFY that the RESPONSE VALUE for essPrecipitationThreeHours.0 is less than or equal to 65535.	Pass / Fail (Sec. 5.8.14)
7	VERIFY that the RESPONSE VALUE for essPrecipitationThreeHours.0 is APPROPRIATE.	Pass / Fail (Sec. 5.8.14)
8	VERIFY that the RESPONSE VALUE for essPrecipitationSixHours.0 is greater than or equal to 0.	Pass / Fail (Sec. 5.8.15)
9	VERIFY that the RESPONSE VALUE for essPrecipitationSixHours.0 is less than or equal to 65535.	Pass / Fail (Sec. 5.8.15)
10	VERIFY that the RESPONSE VALUE for essPrecipitationSixHours.0 is APPROPRIATE.	Pass / Fail (Sec. 5.8.15)
11	VERIFY that the RESPONSE VALUE for essPrecipitationTwelveHours.0 is greater than or equal to 0.	Pass / Fail (Sec. 5.8.16)
12	VERIFY that the RESPONSE VALUE for essPrecipitationTwelveHours.0 is less than or equal to 65535.	Pass / Fail (Sec. 5.8.16)
13	VERIFY that the RESPONSE VALUE for essPrecipitationTwelveHours.0 is APPROPRIATE.	Pass / Fail (Sec. 5.8.16)
14	VERIFY that the RESPONSE VALUE for essPrecipitation24Hours.0 is greater than or equal to 0.	Pass / Fail (Sec. 5.8.17)
15	VERIFY that the RESPONSE VALUE for essPrecipitation24Hours.0 is less than or equal to 65535.	Pass / Fail (Sec. 5.8.17)

Copy Per TRF Distribution Permission © 2022 AASHTO / ITE / NEMA

16	VERIFY that the RESPONSE VALUE for essPrecipitation24Hours.0 is APPROPRIATE.	Pass / Fail (Sec. 5.8.17)

Test Case Results		
Tested By:	***Date Tested:***	***Pass / Fail***
Test Case Notes:		

© 2022 AASHTO / ITE / NEMA

C.2.3.3.10 Retrieve Solar Radiation [Versions 01 to 03]

Test Case: 3.10	***Title:***	*Retrieve Solar Radiation [Versions 01 to 03]*
	Description:	*This test case verifies that the ESS allows a management station to retrieve the solar radiation data stored in the device.*
	Variables:	Device_Version | Test Plan
	Pass/Fail Criteria:	*The device under test (DUT) shall pass every verification step included within the Test Case to pass the Test Case.*

Step	***Test Procedure***	***Device***
1	CONFIGURE: Determine the version of the NTCIP 1204 standard to which the ESS claims conformance (Test Plan). RECORD this information as: »Device_Version	
2	GET the following object(s): »essTotalSun.0 »essInstantaneousTerrestrialRadiation.0 »essInstantaneousSolarRadiation.0 »essTotalRadiation.0 »essTotalRadiationPeriod.0	Pass / Fail (Sec. 3.5.2.3.2.7)
3	VERIFY that the RESPONSE VALUE for essTotalSun.0 is greater than or equal to 0.	Pass / Fail (Sec. 5.9.2)
4	VERIFY that the RESPONSE VALUE for essTotalSun.0 is less than or equal to 1441.	Pass / Fail (Sec. 5.9.2)
5	VERIFY that the RESPONSE VALUE for essTotalSun.0 is APPROPRIATE.	Pass / Fail (Sec. 5.9.2)
6	IF Device_Version is greater than 1, then proceed to Step 6.1; otherwise, proceed to Step 7.1.	
6.1	GET the following object(s): »essInstantaneousTerrestrialRadiation.0 »essInstantaneousSolarRadiation.0 »essTotalRadiation.0 »essTotalRadiationPeriod.0	Pass / Fail (Sec. 4.2.13)
6.2	VERIFY that the RESPONSE VALUE for essInstantaneousTerrestrialRadiation.0 is greater than or equal to -2048.	Pass / Fail (Sec. 5.9.4)
6.3	VERIFY that the RESPONSE VALUE for essInstantaneousTerrestrialRadiation.0 is less than or equal to 2049.	Pass / Fail (Sec. 5.9.4)
6.4	VERIFY that the RESPONSE VALUE for essInstantaneousTerrestrialRadiation.0 is APPROPRIATE.	Pass / Fail (Sec. 5.9.4)
6.5	VERIFY that the RESPONSE VALUE for essInstantaneousSolarRadiation.0 is greater than or equal to -2048.	Pass / Fail (Sec. 5.9.5)
6.6	VERIFY that the RESPONSE VALUE for essInstantaneousSolarRadiation.0 is less than or equal to 2049.	Pass / Fail (Sec. 5.9.5)
6.7	VERIFY that the RESPONSE VALUE for essInstantaneousSolarRadiation.0 is APPROPRIATE.	Pass / Fail (Sec. 5.9.5)
6.8	VERIFY that the RESPONSE VALUE for essTotalRadiation.0 is greater than or equal to -2048.	Pass / Fail (Sec. 5.9.6)

Copy Per TRF Distribution Permission © 2022 AASHTO / ITE / NEMA

6.9	VERIFY that the RESPONSE VALUE for essTotalRadiation.0 is less than or equal to 2049.	Pass / Fail (Sec. 5.9.6)
6.10	VERIFY that the RESPONSE VALUE for essTotalRadiation.0 is APPROPRIATE.	Pass / Fail (Sec. 5.9.6)
6.11	VERIFY that the RESPONSE VALUE for essTotalRadiationPeriod.0 is greater than or equal to 0.	Pass / Fail (Sec. 5.9.7)
6.12	VERIFY that the RESPONSE VALUE for essTotalRadiationPeriod.0 is less than or equal to 86400.	Pass / Fail (Sec. 5.9.7)
6.13	VERIFY that the RESPONSE VALUE for essTotalRadiationPeriod.0 is APPROPRIATE.	Pass / Fail (Sec. 5.9.7)
7.1	GET the following object(s): »essInstantaneousTerrestrialRadiation.0 »essInstantaneousSolarRadiation.0 »essTotalRadiation.0 »essTotalRadiationPeriod.0 VERIFY that the RESPONSE ERROR is equal to 'NoSuchName'.	Pass / Fail (Sec. 4.2.13)
7.2	GET the following object(s): »essSolarRadiation.0	Pass / Fail (RFC 1157)
7.3	VERIFY that the RESPONSE VALUE for essSolarRadiation.0 is greater than or equal to 0.	Pass / Fail (Sec. 5.9.1)
7.4	VERIFY that the RESPONSE VALUE for essSolarRadiation.0 is less than or equal to 65535.	Pass / Fail (Sec. 5.9.1)
7.5	VERIFY that the RESPONSE VALUE for essSolarRadiation.0 is APPROPRIATE.	Pass / Fail (Sec. 5.9.1)

Test Case Results		
Tested By:	***Date Tested:***	***Pass / Fail***
Test Case Notes:		

© 2022 AASHTO / ITE / NEMA

C.2.3.3.11 Retrieve Visibility

Test Case: 3.11	***Title:***	*Retrieve Visibility*
	Description:	*This test case verifies that the ESS allows a management station to retrieve the current visibility distance.*
	Variables:	
	Pass/Fail Criteria:	*The device under test (DUT) shall pass every verification step included within the Test Case to pass the Test Case.*

Step	***Test Procedure***	***Device***
1	GET the following object(s): »essVisibility.0	Pass / Fail (Sec. 3.5.2.3.2.8)
2	VERIFY that the RESPONSE VALUE for essVisibility.0 is greater than or equal to 0.	Pass / Fail (Sec. 5.10.1)
3	VERIFY that the RESPONSE VALUE for essVisibility.0 is less than or equal to 1000001.	Pass / Fail (Sec. 5.10.1)
4	VERIFY that the RESPONSE VALUE for essVisibility.0 is APPROPRIATE.	Pass / Fail (Sec. 5.10.1)

Test Case Results

Tested By:	***Date Tested:***	***Pass / Fail***

Test Case Notes:

© 2022 AASHTO / ITE / NEMA

C.2.3.3.12 Retrieve Compressed Weather Data

Test Case: 3.12	***Title:***	*Retrieve Compressed Weather Data*	
	Description:	*This test case verifies that the ESS allows a management station to retrieve all current weather information in compressed form.*	
	Variables:	*Pressure_Supported*	*PRL 2.5.2.1.1*
		Wind_Supported	*PRL 2.5.2.1.2*
		Required_Wind_Sensors	*PRL 3.6.2*
		Temperature_Supported	*PRL 2.5.2.1.3*
		Required_Temp_Sensors	*PRL 3.6.3*
		Precip_Supported	*PRL 2.5.2.1.5*
		Required_Water_Level_Sensors	*PRL 3.6.22*
		Adjacent_Snow_Depth_Supported	*PRL 3.5.2.3.3.4*
		Roadway_Snow_Depth_Supported	*PRL 3.5.2.3.3.5*
		Ice_Thickness_Supported	*PRL 3.5.2.3.3.6*
		Precip_Rates_Supported	*PRL 3.5.2.3.2.6.2*
		Humidity_Supported	*PRL 2.5.2.1.4*
		Situation_Supported	*PRL 2.5.2.4*
		Visibility_Supported	*PRL 2.5.2.1.7*
		Radiation_Supported	*PRL 2.5.2.1.6*
	Pass/Fail Criteria:	*The device under test (DUT) shall pass every verification step included within the Test Case to pass the Test Case.*	

Step	***Test Procedure***	***Device***
1	CONFIGURE: Determine whether the ESS is required to monitor atmospheric pressure (PRL 2.5.2.1.1). RECORD this information as: »Pressure_Supported	
2	CONFIGURE: Determine the number of wind sensors supported. RECORD this information as: »Wind_Supported (whether the ESS is required to monitor winds—PRL 2.5.2.1.2) »Required_Wind_Sensors (the number of wind sensors that the ESS is required to support—PRL 3.6.2)	
3	CONFIGURE: Determine the number of temperature sensors supported. RECORD this information as: »Temperature_Supported (whether the ESS is required to monitor temperature—PRL 2.5.2.1.3) »Required_Temp_Sensors (the number of temperature sensors that the ESS is required to support—PRL 3.6.3)	

© 2022 AASHTO / ITE / NEMA

4	CONFIGURE: Determine the number of precipitation sensors supported. RECORD this information as: »Precip_Supported (whether the ESS is required to monitor precipitation—PRL 2.5.2.1.5) »Required_Water_Level_Sensors (the number of water level sensors that the ESS is required to support—PRL 3.6.22) »Adjacent_Snow_Depth_Supported (whether the ESS is required to monitor the adjacent snow depth—PRL 3.5.2.3.3.4) »Roadway_Snow_Depth_Supported (whether the ESS is required to monitor the roadway snow depth –PRL 3.5.2.3.3.5) »Ice_Thickness_Supported (whether the ESS is required to monitor the snow pack depth and ice thickness—PRL 3.5.2.3.3.6) »Precip_Rates_Supported (whether the ESS is required to monitor the precipitation rates—PRL 3.5.2.3.2.6.2) »Humidity_Supported (Whether the ESS is required to monitor humidity—PRL 2.5.2.1.4)	
5	CONFIGURE: Determine whether the ESS is required to report situation data (PRL 2.5.2.4). RECORD this information as: »Situation_Supported	
6	CONFIGURE: Determine whether the ESS is required to provide visibility capabilities (PRL 2.5.2.1.7). RECORD this information as: »Visibility_Supported	
7	CONFIGURE: Determine whether the ESS is required to monitor solar radiation (PRL 2.5.2.1.6). RECORD this information as: »Radiation_Supported	
8	GET the following object(s): »essWeatherV3Block.0	Pass / Fail (Sec. 3.5.2.3.2.9)
9	Decode the essWeatherV3Block.0 structure.	
10	VERIFY that the essWeatherV3Block.0 structure was decoded without error.	Pass / Fail (Sec. 5.3.9)
11	IF Pressure_Supported is equal to true, then proceed to Step 11.1; otherwise, proceed to Step 12.	
11.1	VERIFY that the RESPONSE VALUE for the essAtmosphericPressure.0 field of the essWeatherV3Block.0 object is present.	Pass / Fail (Sec. 3.5.2.3.2.1)
11.2	VERIFY that the RESPONSE VALUE for essAtmosphericPressure.0 is between 0 and 65535, inclusive.	Pass / Fail (Sec. 5.5.4)
11.3	VERIFY that the RESPONSE VALUE for essAtmosphericPressure.0 is APPROPRIATE.	Pass / Fail (Sec. 5.5.4)
12	IF Wind_Supported is equal to true, then proceed to Step 12.1; otherwise, proceed to Step 13.	
12.1	VERIFY that the RESPONSE VALUE for the essWindData field of the essWeatherV3Block.0 object is present.	Pass / Fail (Sec. 3.5.2.3.2.2)
12.2	VERIFY that the essWindData field contains at least Required_Wind_Sensors entries.	Pass / Fail (Sec. 3.6.2)
12.3	FOR EACH value, N, from 1 to Required_Wind_Sensors, perform Steps 12.3.1 through 12.3.21.	
12.3.1	VERIFY that the windSensorIndex.x field is present in the Nth essWindDataV3 structure.	Pass / Fail (Sec. 3.5.2.3.2.2)

© 2022 AASHTO / ITE / NEMA

12.3.2	VERIFY that the RESPONSE VALUE for windSensorIndex.x in the Nth essWindData structure is equal to N.	Pass / Fail (Sec. 5.6.10.1)
12.3.3	VERIFY that the windSensorAvgSpeed.x field is present in the Nth essWindDataV3 structure.	Pass / Fail (Sec. 3.5.2.3.2.2)
12.3.4	VERIFY that the RESPONSE VALUE for windSensorAvgSpeed.x in the Nth essWindDataV3 structure is between 0 and 65535, inclusive.	Pass / Fail (Sec. 5.6.10.4)
12.3.5	VERIFY that the RESPONSE VALUE for windSensorAvgSpeed.x in the Nth essWindDataV3 structure is APPROPRIATE.	Pass / Fail (Sec. 5.6.10.4)
12.3.6	VERIFY that the windSensorAvgDirection.x field is present in the Nth essWindDataV3 structure.	Pass / Fail (Sec. 3.5.2.3.2.2)
12.3.7	VERIFY that the RESPONSE VALUE for windSensorAvgDirection.x in the Nth essWindDataV3 structure is between 0 and 361, inclusive.	Pass / Fail (Sec. 5.6.10.5)
12.3.8	VERIFY that the RESPONSE VALUE for windSensorAvgDirection.x in the Nth essWindDataV3 structure is APPROPRIATE.	Pass / Fail (Sec. 5.6.10.5)
12.3.9	VERIFY that the windSensorSpotSpeed.x field is present in the Nth essWindDataV3 structure.	Pass / Fail (Sec. 3.5.2.3.2.2)
12.3.10	VERIFY that the RESPONSE VALUE for windSensorSpotSpeed.x in the Nth essWindDataV3 structure is between 0 and 65535, inclusive.	Pass / Fail (Sec. 5.6.10.6)
12.3.11	VERIFY that the RESPONSE VALUE for windSensorSpotSpeed.x in the Nth essWindDataV3 structure is APPROPRIATE.	Pass / Fail (Sec. 5.6.10.6)
12.3.12	VERIFY that the windSensorSpotDirection.x field is present in the Nth essWindDataV3 structure.	Pass / Fail (Sec. 3.5.2.3.2.2)
12.3.13	VERIFY that the RESPONSE VALUE for windSensorSpotDirection.x in the Nth essWindDataV3 structure is between 0 and 361, inclusive.	Pass / Fail (Sec. 5.6.10.7)
12.3.14	VERIFY that the RESPONSE VALUE for windSensorSpotDirection.x in the Nth essWindDataV3 structure is APPROPRIATE.	Pass / Fail (Sec. 5.6.10.7)
12.3.15	VERIFY that the windSensorGustSpeed.x field is present in the Nth essWindDataV3 structure.	Pass / Fail (Sec. 3.5.2.3.2.2)
12.3.16	VERIFY that the RESPONSE VALUE for windSensorGustSpeed.x in the Nth essWindDataV3 structure is between 0 and 65535, inclusive.	Pass / Fail (Sec. 5.6.10.8)
12.3.17	VERIFY that the RESPONSE VALUE for windSensorGustSpeed.x in the Nth essWindDataV3 structure is APPROPRIATE.	Pass / Fail (Sec. 5.6.10.8)
12.3.18	VERIFY that the windSensorGustDirection.x field is present in the Nth essWindDataV3 structure.	Pass / Fail (Sec. 3.5.2.3.2.2)
12.3.19	VERIFY that the RESPONSE VALUE for windSensorGustDirection.x in the Nth essWindDataV3 structure is between 0 and 361, inclusive.	Pass / Fail (Sec. 5.6.10.9)
12.3.20	VERIFY that the RESPONSE VALUE for windSensorGustDirection.x in the Nth essWindDataV3 structure is APPROPRIATE.	Pass / Fail (Sec. 5.6.10.9)
12.3.21	IF Situation_Supported is equal to true, then proceed to Step 12.3.21.1; otherwise, proceed to Step 13.	
12.3.21.1	VERIFY that the windSensorSituation.x field is present in the Nth essWindDataV3 structure.	Pass / Fail (Sec. 3.5.2.3.2.2)

© 2022 AASHTO / ITE / NEMA

12.3.21.2	VERIFY that the RESPONSE VALUE for windSensorSituation.x in the Nth essWindDataV3 structure is between 1 and 12, inclusive.	Pass / Fail (Sec. 5.6.10.10)
12.3.21.3	VERIFY that the RESPONSE VALUE for windSensorSituation.x in the Nth essWindDataV3 structure is APPROPRIATE.	Pass / Fail (Sec. 5.6.10.10)
13	IF Temperature_Supported is equal to true, then proceed to Step 13.1; otherwise, proceed to Step 14.	
13.1	VERIFY that the essTemperatureData field of the essWeatherV3Block object is present.	Pass / Fail (Sec. 3.5.2.3.2.3)
13.2	VERIFY that the RESPONSE VALUE for the essMaxTemp.0 field of the essTemperatureData field is present.	Pass / Fail (Sec. 3.5.2.3.2.4)
13.3	VERIFY that the RESPONSE VALUE for essMaxTemp.0 is between -1000 and 1001, inclusive.	Pass / Fail (Sec. 5.7.6)
13.4	VERIFY that the RESPONSE VALUE for essMaxTemp.0 is APPROPRIATE.	Pass / Fail (Sec. 5.7.6)
13.5	Determine the maximum temperature reading reported by the device. RECORD this information as: »Max_Temp	
13.6	VERIFY that the RESPONSE VALUE for the essMinTemp.0 field of the essTemperatureData field is present.	Pass / Fail (Sec. 3.5.2.3.2.4)
13.7	VERIFY that the RESPONSE VALUE for essMinTemp.0 is between -1000 and Max_Temp, inclusive.	Pass / Fail (Sec. 5.7.7)
13.8	VERIFY that the RESPONSE VALUE for essMinTemp.0 is APPROPRIATE.	Pass / Fail (Sec. 5.7.7)
13.9	IF Humidity_Supported is equal to 1, then proceed to Step 13.9.1; otherwise, proceed to Step 13.10.	
13.9.1	VERIFY that the RESPONSE VALUE for the essWetBulbTemp.0 field of the essTemperatureData field is present.	Pass / Fail (Sec. 3.5.2.3.2.5)
13.9.2	VERIFY that the RESPONSE VALUE for essWetBulbTemp.0 is between -1000 and 1001, inclusive.	Pass / Fail (Sec. 5.7.4)
13.9.3	VERIFY that the RESPONSE VALUE for essWetBulbTemp.0 is APPROPRIATE.	Pass / Fail (Sec. 5.7.4)
13.9.4	VERIFY that the RESPONSE VALUE for the essDewpointTemp.0 field of the essTemperatureData field is present.	Pass / Fail (Sec. 3.5.2.3.2.5)
13.9.5	VERIFY that the RESPONSE VALUE for essDewpointTemp.0 is between -1000 and 1001, inclusive.	Pass / Fail (Sec. 5.7.5)
13.9.6	VERIFY that the RESPONSE VALUE for essDewpointTemp.0 is APPROPRIATE.	Pass / Fail (Sec. 5.7.5)
13.9.7	VERIFY that the RESPONSE VALUE for the essRelativeHumidity.0 field of the essTemperatureData field is present.	Pass / Fail (Sec. 3.5.2.3.2.5)
13.9.8	VERIFY that the RESPONSE VALUE for essRelativeHumidity.0 is between 0 and 101, inclusive.	Pass / Fail (Sec. 5.8.1)

Copy Per TRF Distribution Permission © 2022 AASHTO / ITE / NEMA

13.9.9	VERIFY that the RESPONSE VALUE for essRelativeHumidity.0 is APPROPRIATE.	Pass / Fail (Sec. 5.8.1)
13.10	VERIFY that the temperatureTable field contains at least Required_Temp_Sensors entries.	Pass / Fail (Sec. 3.6.3)
13.11	FOR EACH value, N, from 1 to Required_Temp_Sensors, perform Steps 13.11.1 through 13.11.5.	
13.11.1	VERIFY that the RESPONSE VALUE for the essTemperatureSensorIndex.x field is present in the Nth Temperature structure.	Pass / Fail (Sec. 3.5.2.3.2.3)
13.11.2	VERIFY that the RESPONSE VALUE for the essTemperatureSensorIndex.x field in the Nth Temperature structure is equal to N.	Pass / Fail (Sec. 5.7.3.1)
13.11.3	VERIFY that the RESPONSE VALUE for the essAirTemperature.x field is present in the Nth Temperature structure.	Pass / Fail (Sec. 3.5.2.3.2.3)
13.11.4	VERIFY that the RESPONSE VALUE for essAirTemperature.x field in the Nth Temperature structure is between -1000 and 1001, inclusive.	Pass / Fail (Sec. 5.7.3.3)
13.11.5	VERIFY that the RESPONSE VALUE for essAirTemperature.x field in the Nth Temperature structure is APPROPRIATE.	Pass / Fail (Sec. 5.7.3.3)
14	IF Precip_Supported is equal to true, then proceed to Step 14.1; otherwise, proceed to Step 15.	
14.1	VERIFY that the RESPONSE VALUE for the essPrecipData field of the essWeatherV3Block.0 object is present.	Pass / Fail (Sec. 3.5.2.3.2.6.1)
14.2	VERIFY that the waterLevelSensorTable field contains at least Required_Water_Level_Sensors entries.	Pass / Fail (Sec. 3.6.22)
14.3	FOR EACH value, N, from 1 to Required_Water_Level_Sensors, perform Steps 14.3.1 through 14.3.5.	
14.3.1	VERIFY that the RESPONSE VALUE for the waterLevelSensorIndex.x field is present in the Nth WaterLevel structure.	Pass / Fail (Sec. 3.5.2.3.7)
14.3.2	VERIFY that the RESPONSE VALUE for the waterLevelSensorIndex.x field in the Nth WaterLevel structure is equal to N.	Pass / Fail (Sec. 5.8.21.1)
14.3.3	VERIFY that the RESPONSE VALUE for the waterLevelSensorReading.x field is present in the Nth WaterLevel structure.	Pass / Fail (Sec. 3.5.2.3.7)
14.3.4	VERIFY that the RESPONSE VALUE for waterLevelSensorReading.x field in the Nth WaterLevel structure is between 0 and 65535, inclusive.	Pass / Fail (Sec. 5.8.21.2)
14.3.5	VERIFY that the RESPONSE VALUE for waterLevelSensorReading.x field in the Nth WaterLevel structure is APPROPRIATE.	Pass / Fail (Sec. 5.8.21.2)
14.4	IF Adjacent_Snow_Depth_Supported is equal to 1, then proceed to Step 14.4.1; otherwise, proceed to Step 14.5.	
14.4.1	VERIFY that the RESPONSE VALUE for the essAdjacentSnowDepth.0 field of the essPrecipData field is present.	Pass / Fail (Sec. 3.5.2.3.3.4)
14.4.2	VERIFY that the RESPONSE VALUE for essAdjacentSnowDepth.0 is between 0 and 3001, inclusive.	Pass / Fail (Sec. 5.8.3)
14.4.3	VERIFY that the RESPONSE VALUE for essAdjacentSnowDepth.0 is APPROPRIATE.	Pass / Fail (Sec. 5.8.3)

© 2022 AASHTO / ITE / NEMA Copy Per TRF Distribution Permission

14.5	IF Roadway_Snow_Depth_Supported is equal to 1, then proceed to Step 14.5.1; otherwise, proceed to Step 14.6.	
14.5.1	VERIFY that the RESPONSE VALUE for the essRoadwaySnowDepth.0 field of the essPrecipData field is present.	Pass / Fail (Sec. 3.5.2.3.3.5)
14.5.2	VERIFY that the RESPONSE VALUE for essRoadwaySnowDepth.0 is between 0 and 3001, inclusive.	Pass / Fail (Sec. 5.8.4)
14.5.3	VERIFY that the RESPONSE VALUE for essRoadwaySnowDepth.0 is APPROPRIATE.	Pass / Fail (Sec. 5.8.4)
14.6	IF Ice_Thickness_Supported is equal to 1, then proceed to Step 14.6.1; otherwise, proceed to Step 14.7.	
14.6.1	VERIFY that the RESPONSE VALUE for the essRoadwaySnowPackDepth.0 field of the essPrecipData field is present.	Pass / Fail (Sec. 3.5.2.3.3.6)
14.6.2	VERIFY that the RESPONSE VALUE for essRoadwaySnowPackDepth.0 is between 0 and 3001, inclusive.	Pass / Fail (Sec. 5.8.5)
14.6.3	VERIFY that the RESPONSE VALUE for essRoadwaySnowPackDepth.0 is APPROPRIATE.	Pass / Fail (Sec. 5.8.5)
14.6.4	VERIFY that the RESPONSE VALUE for the essIceThickness.0 field of the essPrecipData field is present.	Pass / Fail (Sec. 3.5.2.3.3.6)
14.6.5	VERIFY that the RESPONSE VALUE for essIceThickness.0 is between 0 and 65535, inclusive.	Pass / Fail (Sec. 5.8.10)
14.6.6	VERIFY that the RESPONSE VALUE for essIceThickness.0 is APPROPRIATE.	Pass / Fail (Sec. 5.8.10)
14.7	VERIFY that the RESPONSE VALUE for the essPrecipYesNo.0 field of the essPrecipData field is present.	Pass / Fail (Sec. 3.5.2.3.2.6.1)
14.8	VERIFY that the RESPONSE VALUE for essPrecipYesNo.0 is between 1 and 3, inclusive.	Pass / Fail (Sec. 5.8.6)
14.9	VERIFY that the RESPONSE VALUE for essPrecipYesNo.0 is APPROPRIATE.	Pass / Fail (Sec. 5.8.6)
14.10	IF Precip_Rates_Supported is equal to 1, then proceed to Step 14.10.1; otherwise, proceed to Step 14.11.	
14.10.1	VERIFY that the RESPONSE VALUE for the essPrecipRate.0 field of the essPrecipData field is present.	Pass / Fail (Sec. 3.5.2.3.2.6.2)
14.10.2	VERIFY that the RESPONSE VALUE for essPrecipRate.0 is between 0 and 65535, inclusive.	Pass / Fail (Sec. 5.8.7)
14.10.3	VERIFY that the RESPONSE VALUE for essPrecipRate.0 is APPROPRIATE.	Pass / Fail (Sec. 5.8.7)
14.10.4	VERIFY that the RESPONSE VALUE for the essSnowfallAccumRate.0 field of the essPrecipData field is present.	Pass / Fail (Sec. 3.5.2.3.2.6.2)
14.10.5	VERIFY that the RESPONSE VALUE for essSnowfallAccumRate.0 is between 0 and 65535, inclusive.	Pass / Fail (Sec. 5.8.8)
14.10.6	VERIFY that the RESPONSE VALUE for essSnowfallAccumRate.0 is APPROPRIATE.	Pass / Fail (Sec. 5.8.8)

Copy Per TRF Distribution Permission © 2022 AASHTO / ITE / NEMA

14.10.7	VERIFY that the RESPONSE VALUE for the essPrecipitationStartTime.0 field of the essPrecipData field is present.	Pass / Fail (Sec. 3.5.2.3.2.6.2)
14.10.8	VERIFY that the RESPONSE VALUE for essPrecipitationStartTime.0 is between 0 and 4294967295, inclusive.	Pass / Fail (Sec. 5.8.11)
14.10.9	VERIFY that the RESPONSE VALUE for essPrecipitationStartTime.0 is APPROPRIATE.	Pass / Fail (Sec. 5.8.11)
14.10.10	VERIFY that the RESPONSE VALUE for the essPrecipitationEndTime.0 field of the essPrecipData field is present.	Pass / Fail (Sec. 3.5.2.3.2.6.2)
14.10.11	VERIFY that the RESPONSE VALUE for essPrecipitationEndTime.0 is between 0 and 4294967295, inclusive.	Pass / Fail (Sec. 5.8.12)
14.10.12	VERIFY that the RESPONSE VALUE for essPrecipitationEndTime.0 is APPROPRIATE.	Pass / Fail (Sec. 5.8.12)
14.11	IF Situation_Supported is equal to true, then proceed to Step 14.11.1; otherwise, proceed to Step 15.	
14.11.1	VERIFY that the RESPONSE VALUE for the essPrecipSituation.0 field of the essPrecipData field is present.	Pass / Fail (Sec. 3.5.2.3.5.2)
14.11.2	VERIFY that the RESPONSE VALUE for essPrecipSituation.0 is between 1 and 15, inclusive.	Pass / Fail (Sec. 5.8.9)
14.11.3	VERIFY that the RESPONSE VALUE for essPrecipSituation.0 is APPROPRIATE.	Pass / Fail (Sec. 5.8.9)
15	IF Visibility_Supported is equal to true, then proceed to Step 15.1; otherwise, proceed to Step 16.	
15.1	VERIFY that the RESPONSE VALUE for the essVisibilityData field of the essWeatherV3Block.0 object is present.	Pass / Fail (Sec. 3.5.2.3.2.8)
15.2	VERIFY that the RESPONSE VALUE for the essVisibility.0 field of the essVisibilityDataV3 field is present.	Pass / Fail (Sec. 3.5.2.3.2.8)
15.3	VERIFY that the RESPONSE VALUE for essVisibility.0 is between 0 and 1000001, inclusive.	Pass / Fail (Sec. 5.10.1)
15.4	VERIFY that the RESPONSE VALUE for essVisibility.0 is APPROPRIATE.	Pass / Fail (Sec. 5.10.1)
15.5	IF Situation_Supported is equal to true, then proceed to Step 15.5.1; otherwise, proceed to Step 16.	
15.5.1	VERIFY that the RESPONSE VALUE for the essVisibilitySituation.0 field of the essVisibilityDataV3 field is present.	Pass / Fail (Sec. 3.5.2.3.5.4)
15.5.2	VERIFY that the RESPONSE VALUE for essVisibilitySituation.0 is between 1 and 12, inclusive.	Pass / Fail (Sec. 5.10.2)
15.5.3	VERIFY that the RESPONSE VALUE for essVisibilitySituation.0 is APPROPRIATE.	Pass / Fail (Sec. 5.10.2)
16	IF Radiation_Supported is equal to 1, then proceed to Step 16.1; otherwise, proceed to EXIT.	
16.1	VERIFY that the RESPONSE VALUE for the essRadiationData field of the essWeatherV3Block.0 object is present.	Pass / Fail (Sec. 3.5.2.3.2.7)

© 2022 AASHTO / ITE / NEMA

16.2	VERIFY that the RESPONSE VALUE for the essTotalSun.0 field of the essRadiationData field is present.	Pass / Fail (Sec. 3.5.2.3.2.7)
16.3	VERIFY that the RESPONSE VALUE for essTotalSun.0 is between 0 and 1441, inclusive.	Pass / Fail (Sec. 5.9.2)
16.4	VERIFY that the RESPONSE VALUE for essTotalSun.0 is APPROPRIATE.	Pass / Fail (Sec. 5.9.2)
16.5	VERIFY that the RESPONSE VALUE for the essInstantaneousTerrestrialRadiation.0 field of the essRadiationData field is present.	Pass / Fail (Sec. 3.5.2.3.2.7)
16.6	VERIFY that the RESPONSE VALUE for essInstantaneousTerrestrialRadiation.0 is between -2048 and 2049, inclusive.	Pass / Fail (Sec. 5.9.4)
16.7	VERIFY that the RESPONSE VALUE for essInstantaneousTerrestrialRadiation.0 is APPROPRIATE.	Pass / Fail (Sec. 5.9.4)
16.8	VERIFY that the RESPONSE VALUE for the essInstantaneousSolarRadiation.0 field of the essRadiationData field is present.	Pass / Fail (Sec. 3.5.2.3.2.7)
16.9	VERIFY that the RESPONSE VALUE for essInstantaneousSolarRadiation.0 is between -2048 and 2049, inclusive.	Pass / Fail (Sec. 5.9.5)
16.10	VERIFY that the RESPONSE VALUE for essInstantaneousSolarRadiation.0 is APPROPRIATE.	Pass / Fail (Sec. 5.9.5)
16.11	VERIFY that the RESPONSE VALUE for the essTotalRadiation.0 field of the essRadiationData field is present.	Pass / Fail (Sec. 3.5.2.3.2.7)
16.12	VERIFY that the RESPONSE VALUE for essTotalRadiation.0 is between -2048 and 2049, inclusive.	Pass / Fail (Sec. 5.9.6)
16.13	VERIFY that the RESPONSE VALUE for essTotalRadiation.0 is APPROPRIATE.	Pass / Fail (Sec. 5.9.6)
16.14	VERIFY that the RESPONSE VALUE for the essTotalRadiationPeriod.0 field of the essRadiationData field is present.	Pass / Fail (Sec. 3.5.2.3.2.7)
16.15	VERIFY that the RESPONSE VALUE for essTotalRadiationPeriod.0 is between 0 and 86400, inclusive.	Pass / Fail (Sec. 5.9.7)
16.16	VERIFY that the RESPONSE VALUE for essTotalRadiationPeriod.0 is APPROPRIATE.	Pass / Fail (Sec. 5.9.7)
16.17	IF Situation_Supported is equal to true, then proceed to Step 16.17.1; otherwise, proceed to EXIT.	
16.17.1	VERIFY that the RESPONSE VALUE for the essCloudSituation.0 field of the essVisibilityDataV3 field is present.	Pass / Fail (Sec. 3.5.2.3.5.3)
16.17.2	VERIFY that the RESPONSE VALUE for essCloudSituation.0 is between 1 and 5, inclusive.	Pass / Fail (Sec. 5.9.3)
16.17.3	VERIFY that the RESPONSE VALUE for essCloudSituation.0 is APPROPRIATE.	Pass / Fail (Sec. 5.9.3)

Test Case Results		
Tested By:	***Date Tested:***	***Pass / Fail***

© 2022 AASHTO / ITE / NEMA

Test Case Notes:

© 2022 AASHTO / ITE / NEMA
Copy Per TRF Distribution Permission

C.2.3.3.13 Retrieve Precipitation Presence

Test Case: 3.13	***Title:***	*Retrieve Precipitation Presence*
	Description:	*This test case verifies that the ESS allows a management station to retrieve precipitation presence.*
	Variables:	*Supported_Precipitation_Sensors* *(PRL 3.6.5)*
	Pass/Fail Criteria:	*The device under test (DUT) shall pass every verification step included within the Test Case in order to pass the Test Case.*

Step	***Test Procedure***	***Device***
1	CONFIGURE: Determine the number of precipitation sensors that the ESS is required to support.	
2	GET the following object(s): » precipitationSensorTableNumSensors.0	Pass / Fail (Clause 3.5.2.3.2.6.4)
3	VERIFY that the RESPONSE VALUE for precipitationSensorTableNumSensors.0 is greater than or equal to Supported_Precipitation_Sensors.	Pass / Fail (PRL 3.6.5)
4	Determine the RESPONSE VALUE for precipitationSensorTableNumSensors.0. RECORD this information as: »Supported_Precipitation_Sensors	
5	FOR EACH value, N, from 1 to Supported_Precipitation_Sensors, perform Steps 5.1 through 5.3.	
5.1	GET the following object(s): »precipitationSensorPrecipYesNo.N	Pass / Fail (Clause 3.5.2.3.2.6.4)
5.2	VERIFY that the RESPONSE VALUE for precipitationSensorPrecipYesNo.N is equal to one of the following values: precip (1) noPrecip (2) error (3).	Pass / Fail (Clause 5.8.24.11)
5.3	VERIFY that the RESPONSE VALUE for precipitationSensorPrecipYesNo.N is APPROPRIATE.	Pass / Fail (Clause 5.8.24.11)
5.4	GET the following object(s): »precipitationSensorPrecipSituation.N	Pass / Fail (Clause 3.5.2.3.2.6.8)
5.5	VERIFY that the RESPONSE VALUE for precipitationSensorPrecipSituation.N is equal to one of the following values: other (1) unknown (2) noPrecipitation (3) unidentifiedSlight (4) unidentifiedModerate (5) unidentifiedHeavy (6) snowSlight (7) snowModerate (8) snowHeavy (9) rainSlight (10) rainModerate (11) rainHeavy (12) frozenPrecipitationSlight (13) frozenPrecipitationModerate (14) frozenPrecipitationHeavy (15).	Pass / Fail (Clause 5.8.24.14)
5.5	VERIFY that the RESPONSE VALUE for precipitationSensorPrecipSituation.N is APPROPRIATE.	Pass / Fail (Clause 5.8.24.14)

© 2022 AASHTO / ITE / NEMA

Test Case Results		
Tested By:	***Date Tested:***	***Pass / Fail***
Test Case Notes:		

© 2022 AASHTO / ITE / NEMA
Copy Per TRF Distribution Permission

C.2.3.3.14 Retrieve Precipitation Rates

Test Case: 3.14	***Title:***	*Retrieve Precipitation Rates for Each Precipitation Sensor*	
	Description:	*This test case verifies that the ESS allows a management station to determine the precipitation rates of each precipitation sensor.*	
	Variables:	*Supported_Precipitation_Sensors*	*(PRL 3.6.5)*
	Pass/Fail Criteria:	*The device under test (DUT) shall pass every verification step included within the Test Case in order to pass the Test Case.*	

Step	***Test Procedure***	***Device***
1	CONFIGURE: Determine the number of precipitation sensors that the ESS is required to support.	
2	GET the following object(s): » precipitationSensorTableNumSensors.0	Pass / Fail (Clause 3.5.2.3.2.6.5)
3	VERIFY that the RESPONSE VALUE for precipitationSensorTableNumSensors.0 is greater than or equal to Supported_Precipitation_Sensors.	Pass / Fail (PRL 3.6.5)
4	Determine the RESPONSE VALUE for precipitationSensorTableNumSensors.0. RECORD this information as: »Supported_Precipitation_Sensors	
5	FOR EACH value, N, from 1 to Supported_Precipitation_Sensors, perform Steps 5.1 through 5.13.	
5.1	GET the following object(s): »precipitationSensorPrecipRate.N »precipitationSensorSnowfallAccumRate.N »precipitationSensorPrecipitationStartTime.N »precipitationSensorPrecipitationEndTime.N	Pass / Fail (Clause 3.5.2.3.2.6.5)
5.2	VERIFY that the RESPONSE VALUE for precipitationSensorPrecipRate.N is greater than or equal to 0.	Pass / Fail (Clause 5.8.24.12)
5.3	VERIFY that the RESPONSE VALUE for precipitationSensorPrecipRate.N is less than or equal to 65535.	Pass / Fail (Clause 5.8.24.12)
5.4	VERIFY that the RESPONSE VALUE for precipitationSensorPrecipRate.N is APPROPRIATE.	Pass / Fail (Clause 5.8.24.12)
5.5	VERIFY that the RESPONSE VALUE for precipitationSensorSnowfallAccumRate.N is greater than or equal to 0.	Pass / Fail (Clause 5.8.24.13)
5.6	VERIFY that the RESPONSE VALUE for precipitationSensorSnowfallAccumRate.N is less than or equal to 65,535.	Pass / Fail (Clause 5.8.24.13)
5.7	VERIFY that the RESPONSE VALUE for precipitationSensorSnowfallAccumRate.N is APPROPRIATE.	Pass / Fail (Clause 5.8.24.13)
5.8	VERIFY that the RESPONSE VALUE for precipitationSensorPrecipitationStartTime.N is greater than or equal to 0.	Pass / Fail (Clause 5.8.24.16)
5.9	VERIFY that the RESPONSE VALUE for precipitationSensorPrecipitationStartTime.N is less than or equal to 4,294,967,295.	Pass / Fail (Clause 5.8.24.16)
5.10	VERIFY that the RESPONSE VALUE for precipitationSensorPrecipitationStartTime.N is APPROPRIATE.	Pass / Fail (Clause 5.8.24.16)

Copy Per TRF Distribution Permission © 2022 AASHTO / ITE / NEMA

5.11	VERIFY that the RESPONSE VALUE for precipitationSensorPrecipitationEndTime.N is greater than or equal to 0.	Pass / Fail (Clause 5.8.24.17)
5.12	VERIFY that the RESPONSE VALUE for precipitationSensorPrecipitationEndTime.N is less than or equal to 4,294,967,295.	Pass / Fail (Clause 5.8.24.17)
5.13	VERIFY that the RESPONSE VALUE for precipitationSensorPrecipitationEndTime.N is APPROPRIATE.	Pass / Fail (Clause 5.8.24.17)

Test Case Results		
Tested By:	***Date Tested:***	***Pass / Fail***
Test Case Notes:		

© 2022 AASHTO / ITE / NEMA

C.2.3.3.15 Retrieve Precipitation Totals

Test Case: 3.15	***Title:***	*Retrieve Precipitation Totals for Each Precipitation Sensor*	
	Description:	*This test case verifies that the ESS allows a management station to determine the precipitation totals of each precipitation sensor.*	
	Variables:	*Supported_Precipitation_Sensors*	*(PRL 3.6.5)*
	Pass/Fail Criteria:	*The device under test (DUT) shall pass every verification step included within the Test Case in order to pass the Test Case.*	

Step	***Test Procedure***	***Device***
1	CONFIGURE: Determine the number of precipitation sensors that the ESS is required to support.	
2	GET the following object(s): » precipitationSensorTableNumSensors.0	Pass / Fail (Clause 3.5.2.3.2.6.6)
3	VERIFY that the RESPONSE VALUE for precipitationSensorTableNumSensors.0 is greater than or equal to Supported_Precipitation_Sensors.	Pass / Fail (PRL 3.6.5)
4	Determine the RESPONSE VALUE for precipitationSensorTableNumSensors.0. RECORD this information as: »Supported_Precipitation_Sensors	
5	FOR EACH value, N, from 1 to Supported_Precipitation_Sensors, perform Steps 5.1 through 5.16.	
5.1	GET the following object(s): »precipitationSensorPrecipitationOneHour.N »precipitationSensorPrecipitationThreeHours.N »precipitationSensorPrecipitationSixHours.N »precipitationSensorPrecipitationTwelveHours.N »precipitationSensorPrecipitation24Hours.N	Pass / Fail (Clause 3.5.2.3.2.6.6)
5.2	VERIFY that the RESPONSE VALUE for precipitationSensorPrecipitationOneHour.N is greater than or equal to 0.	Pass / Fail (Clause 5.8.24.18)
5.3	VERIFY that the RESPONSE VALUE for precipitationSensorPrecipitationOneHour.N is less than or equal to 65535.	Pass / Fail (Clause 5.8.24.18)
5.4	VERIFY that the RESPONSE VALUE for precipitationSensorPrecipitationOneHour.N is APPROPRIATE.	Pass / Fail (Clause 5.8.24.18)
5.5	VERIFY that the RESPONSE VALUE for precipitationSensorPrecipitationThreeHours.N is greater than or equal to 0.	Pass / Fail (Clause 5.8.24.19)
5.6	VERIFY that the RESPONSE VALUE for precipitationSensorPrecipitationThreeHours.N is less than or equal to 65535.	Pass / Fail (Clause 5.8.24.19)
5.7	VERIFY that the RESPONSE VALUE for precipitationSensorPrecipitationThreeHours.N is APPROPRIATE.	Pass / Fail (Clause 5.8.24.19)
5.8	VERIFY that the RESPONSE VALUE for precipitationSensorPrecipitationSixHours.N is greater than or equal to 0.	Pass / Fail (Clause 5.8.24.20)
5.9	VERIFY that the RESPONSE VALUE for precipitationSensorPrecipitationSixHours.N is less than or equal to 65535.	Pass / Fail (Clause 5.8.24.20)
5.10	VERIFY that the RESPONSE VALUE for precipitationSensorPrecipitationSixHours.N is APPROPRIATE.	Pass / Fail (Clause 5.8.24.20)

© 2022 AASHTO / ITE / NEMA

5.11	VERIFY that the RESPONSE VALUE for precipitationSensorPrecipitationTwelveHours.N is greater than or equal to 0.	Pass / Fail (Clause 5.8.24.21)
5.12	VERIFY that the RESPONSE VALUE for precipitationSensorPrecipitationTwelveHours.N is less than or equal to 65535.	Pass / Fail (Clause 5.8.24.21)
5.13	VERIFY that the RESPONSE VALUE for precipitationSensorPrecipitationTwelveHours.N is APPROPRIATE.	Pass / Fail (Clause 5.8.24.21)
5.14	VERIFY that the RESPONSE VALUE for precipitationSensorPrecipitation24Hours.N is greater than or equal to 0.	Pass / Fail (Clause 5.8.24.22)
5.15	VERIFY that the RESPONSE VALUE for precipitationSensorPrecipitation24Hours.N is less than or equal to 65535.	Pass / Fail (Clause 5.8.24.22)
5.16	VERIFY that the RESPONSE VALUE for precipitationSensorPrecipitation24Hours.N is APPROPRIATE.	Pass / Fail (Clause 5.8.24.22)

Test Case Results		
Tested By:	***Date Tested:***	***Pass / Fail***
Test Case Notes:		

© 2022 AASHTO / ITE / NEMA

C.2.3.3.16 Retrieve Precipitation Totals – User Specified

Test Case: 3.16	***Title:***	*Retrieve Precipitation Totals – User Specified*	
	Description:	*This test case verifies that the ESS allows a management station to retrieve precipitation totals – user specified.*	
	Variables:	*Supported_Precipitation_Sensors*	*(PRL 3.6.5)*
	Pass/Fail Criteria:	*The device under test (DUT) shall pass every verification step included within the Test Case in order to pass the Test Case.*	

Step	***Test Procedure***	***Device***
1	CONFIGURE: Determine the number of precipitation sensors that the ESS is required to support.	
2	GET the following object(s): » precipitationSensorTableNumSensors.0	Pass / Fail (Clause 3.5.2.3.2.6.7)
3	VERIFY that the RESPONSE VALUE for precipitationSensorTableNumSensors.0 is greater than or equal to Supported_Precipitation_Sensors.	Pass / Fail (PRL 3.6.5)
4	Determine the RESPONSE VALUE for precipitationSensorTableNumSensors.0. RECORD this information as: »Supported_Precipitation_Sensors	
5	FOR EACH value, N, from 1 to Supported_Precipitation_Sensors, perform Steps 5.1 through 5.4.	
5.1	GET the following object(s): »precipitationSensorPeriod.N	Pass / Fail (Clause 3.5.2.3.2.6.7)
5.2	VERIFY that the RESPONSE VALUE for precipitationSensorPeriod.N is greater than or equal to 0.	Pass / Fail (Clause 5.8.24.7)
5.3	VERIFY that the RESPONSE VALUE for precipitationSensorPeriod.N is less than or equal to 86400.	Pass / Fail (Clause 5.8.24.7)
5.4	VERIFY that the RESPONSE VALUE for precipitationSensorPeriod.N is APPROPRIATE.	Pass / Fail (Clause 5.8.24.7)
5.5	GET the following object(s): »precipitationSensorPrecipitationUserDefined.N	Pass / Fail (Clause 3.5.2.3.2.6.7)
5.6	VERIFY that the RESPONSE VALUE for precipitationSensorPrecipitationUserDefined.N is APPROPRIATE.	Pass / Fail (Clause 5.8.24.23)
5.7	VERIFY that the RESPONSE VALUE for precipitationSensorPrecipitationUserDefined.N is greater than or equal to 0.	Pass / Fail (Clause 5.8.24.23)
5.8	VERIFY that the RESPONSE VALUE for precipitationSensorPrecipitationUserDefined.N is less than or equal to 86400.	Pass / Fail (Clause 5.8.24.23)

Test Case Results		
Tested By:	***Date Tested:***	***Pass / Fail***
Test Case Notes:		

© 2022 AASHTO / ITE / NEMA

C.2.3.3.17 Retrieve Atmospheric Pressure

Test Case: 3.17	***Title:***	*Retrieve Atmospheric Pressure for Each Atmospheric Pressure Sensor*	
	Description:	*This test case verifies that the ESS allows a management station to retrieve the atmospheric pressure reading of each atmospheric pressure sensor.*	
	Variables:	*Supported_Pressure_Sensors*	*(PRL 3.6.1)*
	Pass/Fail Criteria:	*The device under test (DUT) shall pass every verification step included within the Test Case in order to pass the Test Case.*	

Step	***Test Procedure***	***Device***
1	CONFIGURE: Determine the number of atmospheric sensors that the ESS is required to support.	
2	GET the following object(s): »essNumPressureSensors.0	Pass / Fail (Clause 3.5.2.3.2.10)
3	VERIFY that the RESPONSE VALUE for essNumPressureSensors.0 is greater than or equal to Supported_Pressure_Sensors.	Pass / Fail (PRL 3.6.1)
4	Determine the RESPONSE VALUE for essNumPressureSensors.0. RECORD this information as: »Supported_Pressure_Sensors	
5	FOR EACH value, N, from 1 to Supported_Pressure_Sensors, perform Steps 5.1 through 5.4.	
5.1	GET the following object(s): »essPressureSensorAtmosphericPressure.N	Pass / Fail (Clause 3.5.2.3.2.10)
5.2	VERIFY that the RESPONSE VALUE for essPressureSensorAtmosphericPressure.N is greater than or equal to 0.	Pass / Fail (Clause 5.5.7.7)
5.3	VERIFY that the RESPONSE VALUE for essPressureSensorAtmosphericPressure.N is less than or equal to 65535.	Pass / Fail (Clause 5.5.7.7)
5.4	VERIFY that the RESPONSE VALUE for essPressureSensorAtmosphericPressure.N is APPROPRIATE.	Pass / Fail (Clause 5.5.7.7)

Test Case Results		
Tested By:	***Date Tested:***	***Pass / Fail***
Test Case Notes:		

© 2022 AASHTO / ITE / NEMA

C.2.3.3.18 Retrieve Relative Humidity Sensor

Test Case: 3.18	***Title:***	*Retrieve Relative Humidity for Each Humidity Sensor*	
	Description:	*This test case verifies that the ESS allows a management station to retrieve the relative humidity reading of each humidity sensor.*	
	Variables:	*Supported_Humidity_Sensors*	*(PRL 3.6.4)*
	Pass/Fail Criteria:	*The device under test (DUT) shall pass every verification step included within the Test Case in order to pass the Test Case.*	

Step	***Test Procedure***	***Device***
1	CONFIGURE: Determine the number of humidity sensors that the ESS is required to support.	
2	GET the following object(s): » humiditySensorTableNumSensors.0	Pass / Fail (Clause 3.5.2.3.2.11)
3	VERIFY that the RESPONSE VALUE for humiditySensorTableNumSensors.0 is greater than or equal to Supported_Humidity_Sensors.	Pass / Fail (PRL 3.6.4)
4	Determine the RESPONSE VALUE for humiditySensorTableNumSensors.0. RECORD this information as: »Supported_Humidity_Sensors	
5	GET the following object(s): » essNumTemperatureSensors.0	
6	FOR EACH value, N, from 1 to Supported_Humidity_Sensors, perform Steps 6.1 through 6.10.	
6.1	GET the following object(s): »humiditySensorRelativeHumidity.N »humiditySensorTemperatureInformation.N »humiditySensorWetbulbTemp.N »humiditySensorDewpointTemp.N	Pass / Fail (Clause 3.5.2.3.2.11)
6.2	VERIFY that the RESPONSE VALUE for humiditySensorRelativeHumidity.N is greater than or equal to 0.	Pass / Fail (Clause 5.8.27.7)
6.3	VERIFY that the RESPONSE VALUE for humiditySensorRelativeHumidity.N is less than or equal to 101.	Pass / Fail (Clause 5.8.27.7)
6.4	VERIFY that the RESPONSE VALUE for humiditySensorRelativeHumidity.N is APPROPRIATE.	Pass / Fail (Clause 5.8.27.7)
6.5	VERIFY that the RESPONSE VALUE for humiditySensorTemperatureInformation.N is greater than or equal to 1.	Pass / Fail (Clause 5.8.27.8)
6.6	VERIFY that the RESPONSE VALUE for humiditySensorTemperatureInformation.N is less than or equal to essNumTemperatureSensors.	Pass / Fail (Clause 5.8.27.8)
6.7	VERIFY that the RESPONSE VALUE for humiditySensorTemperatureInformation.N is APPROPRIATE.	Pass / Fail (Clause 5.8.27.8)
6.8	VERIFY that the RESPONSE VALUE for humiditySensorWetbulbTemp.N is greater than or equal to -1000.	Pass / Fail (Clause 5.8.27.9)
6.9	VERIFY that the RESPONSE VALUE for humiditySensorWetbulbTemp.N is less than or equal to 1001.	Pass / Fail (Clause 5.8.27.9)

Copy Per TRF Distribution Permission © 2022 AASHTO / ITE / NEMA

6.10	VERIFY that the RESPONSE VALUE for humiditySensorWetbulbTemp.N is APPROPRIATE.	Pass / Fail (Clause 5.8.27.9)
6.11	VERIFY that the RESPONSE VALUE for humiditySensorDewpointTemp.N is greater than or equal to -1000.	Pass / Fail (Clause 5.8.27.10)
6.12	VERIFY that the RESPONSE VALUE for humiditySensorDewpointTemp.N is less than or equal to 1001.	Pass / Fail (Clause 5.8.27.10)
6.13	VERIFY that the RESPONSE VALUE for humiditySensorDewpointTemp.N is APPROPRIATE.	Pass / Fail (Clause 5.8.27.10)

Test Case Results		
Tested By:	***Date Tested:***	***Pass / Fail***
Test Case Notes:		

© 2022 AASHTO / ITE / NEMA

C.2.3.3.19 Retrieve Solar Radiation

Test Case: 3.19	***Title:***	*Retrieve Solar Radiation*
	Description:	*This test case verifies that the ESS allows a management station to retrieve the solar radiation data stored in the device.*
	Variables:	Supported_Radiation_Sensors (PRL 3.6.6)
	Pass/Fail Criteria:	*The device under test (DUT) shall pass every verification step included within the Test Case to pass the Test Case.*

Step	***Test Procedure***	***Device***
1	CONFIGURE: Determine the number of solar radiation sensors that the ESS is required to support.	
2	GET the following object(s): »radiationSensorTableNumSensors.0	Pass / Fail (Clause 3.5.2.3.2.12)
3	VERIFY that the RESPONSE VALUE for radiationSensorTableNumSensors.0 is greater than or equal to Supported_Radiation_Sensors.	Pass / Fail (PRL 3.6.6)
4	Determine the RESPONSE VALUE for radiationSensorTableNumSensors.0. RECORD this information as: »Supported_Radiation_Sensors	
5	FOR EACH value, N, from 1 to Supported_ Radiation _Sensors, perform Steps 5.1 through 5.13.	
5.1	GET the following object(s): »essTotalSunV4.N »essInstantaneousTerrestrialRadiation.N »essInstantaneousSolarRadiation.N »essTotalRadiation.N »essTotalRadiationPeriod.0	Pass / Fail (Sec. 3.5.2.3.2.12)
5.2	VERIFY that the RESPONSE VALUE for essTotalSunV4.N is greater than or equal to 0.	Pass / Fail (Sec. 5.9.10.7)
5.3	VERIFY that the RESPONSE VALUE for essTotalSunV4.N is less than or equal to 1441.	Pass / Fail (Sec. 5.9.10.7)
5.4	VERIFY that the RESPONSE VALUE for essTotalSunV4.N is APPROPRIATE.	Pass / Fail (Sec. 5.9.10.7)
5.5	VERIFY that the RESPONSE VALUE for essInstantaneousTerrestrialRadiationV4.N is greater than or equal to -2048.	Pass / Fail (Sec. 5.9.10.8)
5.6	VERIFY that the RESPONSE VALUE for essInstantaneousTerrestrialRadiationV4.N is less than or equal to 2049.	Pass / Fail (Sec. 5.9.10.8)
5.7	VERIFY that the RESPONSE VALUE for essInstantaneousTerrestrialRadiationV4.N is APPROPRIATE.	Pass / Fail (Sec. 5.9.10.8)
5.8	VERIFY that the RESPONSE VALUE for essInstantaneousSolarRadiationV4.N is greater than or equal to -2048.	Pass / Fail (Sec. 5.9.10.9)
5.9	VERIFY that the RESPONSE VALUE for essInstantaneousSolarRadiationV4.N is less than or equal to 2049.	Pass / Fail (Sec. 5.9.10.9)
5.10	VERIFY that the RESPONSE VALUE for essInstantaneousSolarRadiationV4.N is APPROPRIATE.	Pass / Fail (Sec. 5.9.10.9)

Copy Per TRF Distribution Permission © 2022 AASHTO / ITE / NEMA

5.11	VERIFY that the RESPONSE VALUE for essTotalRadiationV4.N is greater than or equal to -2048.	Pass / Fail (Sec. 5.9.10.10)
5.12	VERIFY that the RESPONSE VALUE for essTotalRadiationV4.N is less than or equal to 2049.	Pass / Fail (Sec. 5.9.10.10)
5.13	VERIFY that the RESPONSE VALUE for essTotalRadiationV4.N is APPROPRIATE.	Pass / Fail (Sec. 5.9.10.10)
6	VERIFY that the RESPONSE VALUE for essTotalRadiationPeriod.0 is greater than or equal to 0.	Pass / Fail (Sec. 5.9.7)
7	VERIFY that the RESPONSE VALUE for essTotalRadiationPeriod.0 is less than or equal to 86400.	Pass / Fail (Sec. 5.9.7)
8	VERIFY that the RESPONSE VALUE for essTotalRadiationPeriod.0 is APPROPRIATE.	Pass / Fail (Sec. 5.9.7)

Test Case Results		
Tested By:	***Date Tested:***	***Pass / Fail***
Test Case Notes:		

© 2022 AASHTO / ITE / NEMA

C.2.3.4 Pavement Tests

C.2.3.4.1 Retrieve Pavement Surface Condition [Versions 01 to 03]

Test Case: 4.1	***Title:***	*Retrieve Pavement Surface Condition [Versions 01 to 03]*	
	Description:	*This test case verifies that the ESS allows a management station to retrieve the current temperature and moisture of the pavement.*	
	Variables:	*Required_Pavement_Sensors*	*PRL 3.6.8*
		Device_Version	*Test Plan*
	Pass/Fail Criteria:	*The device under test (DUT) shall pass every verification step included within the Test Case to pass the Test Case.*	

Step	***Test Procedure***	***Device***
1	CONFIGURE: Determine the number of pavement sensors required by the specification (PRL 3.6.8). RECORD this information as: »Required_Pavement_Sensors	
2	CONFIGURE: Determine the version of the NTCIP 1204 standard to which the ESS claims conformance (Test Plan). RECORD this information as: »Device_Version	
3	SET-UP: GET the following object(s): »globalMaxModules.0	
4	SET-UP: Determine the RESPONSE VALUE for globalMaxModules.0. RECORD this information as: »Num_Modules	
5	GET the following object(s): »numEssPavementSensors.0	Pass / Fail (RFC 1157)
6	VERIFY that the RESPONSE VALUE for numEssPavementSensors.0 is greater than or equal to Required_Pavement_Sensors.	Pass / Fail (Sec. 5.11.1)
7	Determine a random number between 1 and Required_Pavement_Sensors. RECORD this information as: »Subject_Sensor	
8	GET the following object(s): »essSurfaceStatus.Subject_Sensor »essSurfaceTemperature.Subject_Sensor »essPavementSensorError.Subject_Sensor »pavementSensorModelInformation.Subject_Sensor	Pass / Fail (Sec. 3.5.2.3.3.14.2.14)
9	VERIFY that the RESPONSE VALUE for essSurfaceStatus.Subject_Sensor is greater than or equal to 1.	Pass / Fail (Sec. 5.11.3.7)
10	VERIFY that the RESPONSE VALUE for essSurfaceStatus.Subject_Sensor is less than or equal to 14.	Pass / Fail (Sec. 5.11.3.7)
11	VERIFY that the RESPONSE VALUE for essSurfaceStatus.Subject_Sensor is APPROPRIATE.	Pass / Fail (Sec. 5.11.3.7)
12	VERIFY that the RESPONSE VALUE for essSurfaceTemperature.Subject_Sensor is greater than or equal to -1000.	Pass / Fail (Sec. 5.11.3.8)
13	VERIFY that the RESPONSE VALUE for essSurfaceTemperature.Subject_Sensor is less than or equal to 1001.	Pass / Fail (Sec. 5.11.3.8)

Copy Per TRF Distribution Permission © 2022 AASHTO / ITE / NEMA

14	VERIFY that the RESPONSE VALUE for essSurfaceTemperature.Subject_Sensor is APPROPRIATE.	Pass / Fail (Sec. 5.11.3.8)
15	VERIFY that the RESPONSE VALUE for essPavementSensorError.Subject_Sensor is greater than or equal to 1.	Pass / Fail (Sec. 5.11.3.15)
16	VERIFY that the RESPONSE VALUE for essPavementSensorError.Subject_Sensor is less than or equal to 6.	Pass / Fail (Sec. 5.11.3.15)
17	VERIFY that the RESPONSE VALUE for essPavementSensorError.Subject_Sensor is APPROPRIATE.	Pass / Fail (Sec. 5.11.3.15)
18	IF Device_Version is greater than 1, then proceed to Step 18.1; otherwise, proceed to Step 19.1.	
18.1	GET the following object(s): »pavementSensorModelInformation.Subject_Sensor	Pass / Fail (Sec. 4.2.14)
18.2	VERIFY that the RESPONSE VALUE for pavementSensorModelInformation.Subject_Sensor is greater than or equal to 1.	Pass / Fail (Sec. 5.11.3.18)
18.3	VERIFY that the RESPONSE VALUE for pavementSensorModelInformation.Subject_Sensor is less than or equal to Num_Modules.	Pass / Fail (Sec. 5.11.3.18)
18.4	VERIFY that the RESPONSE VALUE for pavementSensorModelInformation.Subject_Sensor is APPROPRIATE.	Pass / Fail (Sec. 5.11.3.18)
19.1	GET the following object(s): »pavementSensorModelInformation.Subject_Sensor VERIFY that the RESPONSE ERROR is equal to ‘NoSuchName’.	Pass / Fail (Sec. 4.2.14)

Test Case Results		
Tested By:	***Date Tested:***	***Pass / Fail***
Test Case Notes:		

© 2022 AASHTO / ITE / NEMA

C.2.3.4.2 Retrieve Icing Conditions—Active

Test Case: 4.2	***Title:***	*Retrieve Icing Conditions—Active*
	Description:	*This test case verifies that the ESS allows a management station to retrieve icing condition information from an active sensor.*
	Variables:	*Active_Pavement_Sensor* — *Test Plan* *Device_Version* — *Test Plan*
	Pass/Fail Criteria:	*The device under test (DUT) shall pass every verification step included within the Test Case to pass the Test Case.*

Step	***Test Procedure***	***Device***
1	CONFIGURE: Determine the identifier of an active pavement sensor (Test Plan). RECORD this information as: »Active_Pavement_Sensor	
2	CONFIGURE: Determine the version of the NTCIP 1204 standard to which the ESS claims conformance (Test Plan). RECORD this information as: »Device_Version	
3	GET the following object(s): »essSurfaceTemperature.Active_Pavement_Sensor »essPavementTemperature.Active_Pavement_Sensor »essSurfaceFreezePoint.Active_Pavement_Sensor »essSurfaceBlackIceSignal.Active_Pavement_Sensor »essPavementSensorError.Active_Pavement_Sensor »essSurfaceIceOrWaterDepth.Active_Pavement_Sensor »pavementSensorTemperatureDepth.Active_Pavement_Sensor	Pass / Fail (Sec. 3.5.2.3.3.24.2.15)
4	VERIFY that the RESPONSE VALUE for essSurfaceTemperature.Active_Pavement_Sensor is greater than or equal to -1000.	Pass / Fail (Sec. 5.11.3.8)
5	VERIFY that the RESPONSE VALUE for essSurfaceTemperature.Active_Pavement_Sensor is less than or equal to 1001.	Pass / Fail (Sec. 5.11.3.8)
6	VERIFY that the RESPONSE VALUE for essSurfaceTemperature.Active_Pavement_Sensor is APPROPRIATE.	Pass / Fail (Sec. 5.11.3.8)
7	VERIFY that the RESPONSE VALUE for essPavementTemperature.Active_Pavement_Sensor is greater than or equal to -1000.	Pass / Fail (Sec. 5.11.3.9)
8	VERIFY that the RESPONSE VALUE for essPavementTemperature.Active_Pavement_Sensor is less than or equal to 1001.	Pass / Fail (Sec. 5.11.3.9)
9	VERIFY that the RESPONSE VALUE for essPavementTemperature.Active_Pavement_Sensor is APPROPRIATE.	Pass / Fail (Sec. 5.11.3.9)
10	VERIFY that the RESPONSE VALUE for essSurfaceFreezePoint.Active_Pavement_Sensor is greater than or equal to -1000.	Pass / Fail (Sec. 5.11.3.13)
11	VERIFY that the RESPONSE VALUE for essSurfaceFreezePoint.Active_Pavement_Sensor is less than or equal to 1001.	Pass / Fail (Sec. 5.11.3.13)
12	VERIFY that the RESPONSE VALUE for essSurfaceFreezePoint.Active_Pavement_Sensor is APPROPRIATE.	Pass / Fail (Sec. 5.11.3.13)
13	VERIFY that the RESPONSE VALUE for essSurfaceBlackIceSignal.Active_Pavement_Sensor is greater than or equal to 1.	Pass / Fail (Sec. 5.11.3.14)
14	VERIFY that the RESPONSE VALUE for essSurfaceBlackIceSignal.Active_Pavement_Sensor is less than or equal to 4.	Pass / Fail (Sec. 5.11.3.14)

Copy Per TRF Distribution Permission © 2022 AASHTO / ITE / NEMA

15	VERIFY that the RESPONSE VALUE for essSurfaceBlackIceSignal.Active_Pavement_Sensor is APPROPRIATE.	Pass / Fail (Sec. 5.11.3.14)
16	VERIFY that the RESPONSE VALUE for essPavementSensorError.Active_Pavement_Sensor is greater than or equal to 1.	Pass / Fail (Sec. 5.11.3.15)
17	VERIFY that the RESPONSE VALUE for essPavementSensorError.Active_Pavement_Sensor is less than or equal to 6.	Pass / Fail (Sec. 5.11.3.15)
18	VERIFY that the RESPONSE VALUE for essPavementSensorError.Active_Pavement_Sensor is APPROPRIATE.	Pass / Fail (Sec. 5.11.3.15)
19	IF Device_Version is greater than 1, then proceed to Step 19.1; otherwise, proceed to Step 20.1.	
19.1	GET the following object(s): »essSurfaceIceOrWaterDepth.Active_Pavement_Sensor »pavementSensorTemperatureDepth.Active_Pavement_Sensor	Pass / Fail (Sec. 4.2.15)
19.2	VERIFY that the RESPONSE VALUE for essSurfaceIceOrWaterDepth.Active_Pavement_Sensor is greater than or equal to 0.	Pass / Fail (Sec. 5.11.3.16)
19.3	VERIFY that the RESPONSE VALUE for essSurfaceIceOrWaterDepth.Active_Pavement_Sensor is less than or equal to 65535.	Pass / Fail (Sec. 5.11.3.16)
19.4	VERIFY that the RESPONSE VALUE for essSurfaceIceOrWaterDepth.Active_Pavement_Sensor is APPROPRIATE.	Pass / Fail (Sec. 5.11.3.16)
19.5	VERIFY that the RESPONSE VALUE for pavementSensorTemperatureDepth.Active_Pavement_Sensor is greater than or equal to 2.	Pass / Fail (Sec. 5.11.3.19)
19.6	VERIFY that the RESPONSE VALUE for pavementSensorTemperatureDepth.Active_Pavement_Sensor is less than or equal to 11.	Pass / Fail (Sec. 5.11.3.19)
19.7	VERIFY that the RESPONSE VALUE for pavementSensorTemperatureDepth.Active_Pavement_Sensor is APPROPRIATE.	Pass / Fail (Sec. 5.11.3.19)
20.1	GET the following object(s): »essSurfaceIceOrWaterDepth.Active_Pavement_Sensor »pavementSensorTemperatureDepth.Active_Pavement_Sensor VERIFY that the RESPONSE ERROR is equal to ‘NoSuchName’.	Pass / Fail (Sec. 4.2.15)

Test Case Results		
Tested By:	***Date Tested:***	***Pass / Fail***
Test Case Notes:		

© 2022 AASHTO / ITE / NEMA

C.2.3.4.3 Retrieve Icing Conditions—Passive

Test Case: 4.3	***Title:***	*Retrieve Icing Conditions—Passive*
	Description:	*This test case verifies that the ESS allows a management station to retrieve icing condition information from an passive sensor.*
	Variables:	*Passive_Pavement_Sensor* — *Test Plan* *Device_Version* — *Test Plan*
	Pass/Fail Criteria:	*The device under test (DUT) shall pass every verification step included within the Test Case to pass the Test Case.*

Step	***Test Procedure***	***Device***
1	CONFIGURE: Determine the identifier of a passive pavement sensor (Test Plan). RECORD this information as: »Passive_Pavement_Sensor	
2	CONFIGURE: Determine the version of the NTCIP 1204 standard to which the ESS claims conformance (Test Plan). RECORD this information as: »Device_Version	
3	GET the following object(s): »essSurfaceTemperature.Passive_Pavement_Sensor »essPavementTemperature.Passive_Pavement_Sensor »essSurfaceSalinity.Passive_Pavement_Sensor »essSurfaceFreezePoint.Passive_Pavement_Sensor »essSurfaceBlackIceSignal.Passive_Pavement_Sensor »essPavementSensorError.Passive_Pavement_Sensor »essSurfaceIceOrWaterDepth.Passive_Pavement_Sensor »essSurfaceConductivityV2.Passive_Pavement_Sensor »pavementSensorTemperatureDepth.Passive_Pavement_Sensor	Pass / Fail (Sec. 4.2.6.b)
4	VERIFY that the RESPONSE VALUE for essSurfaceTemperature.Passive_Pavement_Sensor is greater than or equal to -1000.	Pass / Fail (Sec. 5.11.3.8)
5	VERIFY that the RESPONSE VALUE for essSurfaceTemperature.Passive_Pavement_Sensor is less than or equal to 1001.	Pass / Fail (Sec. 5.11.3.8)
6	VERIFY that the RESPONSE VALUE for essSurfaceTemperature.Passive_Pavement_Sensor is APPROPRIATE.	Pass / Fail (Sec. 5.11.3.8)
7	VERIFY that the RESPONSE VALUE for essPavementTemperature.Passive_Pavement_Sensor is greater than or equal to -1000.	Pass / Fail (Sec. 5.11.3.9)
8	VERIFY that the RESPONSE VALUE for essPavementTemperature.Passive_Pavement_Sensor is less than or equal to 1001.	Pass / Fail (Sec. 5.11.3.9)
9	VERIFY that the RESPONSE VALUE for essPavementTemperature.Passive_Pavement_Sensor is APPROPRIATE.	Pass / Fail (Sec. 5.11.3.9)
10	VERIFY that the RESPONSE VALUE for essSurfaceSalinity.Passive_Pavement_Sensor is greater than or equal to 0.	Pass / Fail (Sec. 5.11.3.11)
11	VERIFY that the RESPONSE VALUE for essSurfaceSalinity.Passive_Pavement_Sensor is less than or equal to 65535.	Pass / Fail (Sec. 5.11.3.11)
12	VERIFY that the RESPONSE VALUE for essSurfaceSalinity.Passive_Pavement_Sensor is APPROPRIATE.	Pass / Fail (Sec. 5.11.3.11)
13	VERIFY that the RESPONSE VALUE for essSurfaceFreezePoint.Passive_Pavement_Sensor is greater than or equal to -1000.	Pass / Fail (Sec. 5.11.3.13)

Copy Per TRF Distribution Permission © 2022 AASHTO / ITE / NEMA

14	VERIFY that the RESPONSE VALUE for essSurfaceFreezePoint.Passive_Pavement_Sensor is less than or equal to 1001.	Pass / Fail (Sec. 5.11.3.13)
15	VERIFY that the RESPONSE VALUE for essSurfaceFreezePoint.Passive_Pavement_Sensor is APPROPRIATE.	Pass / Fail (Sec. 5.11.3.13)
16	VERIFY that the RESPONSE VALUE for essSurfaceBlackIceSignal.Passive_Pavement_Sensor is greater than or equal to 1.	Pass / Fail (Sec. 5.11.3.14)
17	VERIFY that the RESPONSE VALUE for essSurfaceBlackIceSignal.Passive_Pavement_Sensor is less than or equal to 4.	Pass / Fail (Sec. 5.11.3.14)
18	VERIFY that the RESPONSE VALUE for essSurfaceBlackIceSignal.Passive_Pavement_Sensor is APPROPRIATE.	Pass / Fail (Sec. 5.11.3.14)
19	VERIFY that the RESPONSE VALUE for essPavementSensorError.Passive_Pavement_Sensor is greater than or equal to 1.	Pass / Fail (Sec. 5.11.3.15)
20	VERIFY that the RESPONSE VALUE for essPavementSensorError.Passive_Pavement_Sensor is less than or equal to 6.	Pass / Fail (Sec. 5.11.3.15)
21	VERIFY that the RESPONSE VALUE for essPavementSensorError.Passive_Pavement_Sensor is APPROPRIATE.	Pass / Fail (Sec. 5.11.3.15)
22	IF Device_Version is greater than 1, then proceed to Step 22.1; otherwise, proceed to Step 23.1.	
22.1	GET the following object(s): »essSurfaceIceOrWaterDepth.Passive_Pavement_Sensor »essSurfaceConductivityV2.Passive_Pavement_Sensor »pavementSensorTemperatureDepth.Passive_Pavement_Sensor	Pass / Fail (Sec. 4.2.6.c)
22.2	VERIFY that the RESPONSE VALUE for essSurfaceIceOrWaterDepth.Passive_Pavement_Sensor is greater than or equal to 0.	Pass / Fail (Sec. 5.11.3.16)
22.3	VERIFY that the RESPONSE VALUE for essSurfaceIceOrWaterDepth.Passive_Pavement_Sensor is less than or equal to 65535.	Pass / Fail (Sec. 5.11.3.16)
22.4	VERIFY that the RESPONSE VALUE for essSurfaceIceOrWaterDepth.Passive_Pavement_Sensor is APPROPRIATE.	Pass / Fail (Sec. 5.11.3.16)
22.5	VERIFY that the RESPONSE VALUE for essSurfaceConductivityV2.Passive_Pavement_Sensor is greater than or equal to 0.	Pass / Fail (Sec. 5.11.3.17)
22.6	VERIFY that the RESPONSE VALUE for essSurfaceConductivityV2.Passive_Pavement_Sensor is less than or equal to 65535.	Pass / Fail (Sec. 5.11.3.17)
22.7	VERIFY that the RESPONSE VALUE for essSurfaceConductivityV2.Passive_Pavement_Sensor is APPROPRIATE.	Pass / Fail (Sec. 5.11.3.17)
22.8	VERIFY that the RESPONSE VALUE for pavementSensorTemperatureDepth.Passive_Pavement_Sensor is greater than or equal to 2.	Pass / Fail (Sec. 5.11.3.19)
22.9	VERIFY that the RESPONSE VALUE for pavementSensorTemperatureDepth.Passive_Pavement_Sensor is less than or equal to 11.	Pass / Fail (Sec. 5.11.3.19)
22.10	VERIFY that the RESPONSE VALUE for pavementSensorTemperatureDepth.Passive_Pavement_Sensor is APPROPRIATE. GO TO Step 24.	Pass / Fail (Sec. 5.11.3.19)

© 2022 AASHTO / ITE / NEMA Copy Per TRF Distribution Permission

23.1	GET the following object(s): »essSurfaceIceOrWaterDepth.Passive_Pavement_Sensor »essSurfaceConductivityV2.Passive_Pavement_Sensor »pavementSensorTemperatureDepth.Passive_Pavement_Sensor VERIFY that the RESPONSE ERROR is equal to 'NoSuchName'.	Pass / Fail (Sec. 4.2.6.c)
24	GET the following object(s): »numEssTreatments.0	Pass / Fail (Sec. 4.2.6.dc)
25	Determine the RESPONSE VALUE for numEssTreatments.0. RECORD this information as: »Num_Products	
26	FOR EACH value, N, from 1 to Num_Products, perform Steps 32.1 through 32.10.	
26.1	GET the following object(s): »essPaveTreatProductType.N »essPaveTreatProductForm.N »essPercentProductMix.N	Pass / Fail (Sec. 4.2.6.de)
26.2	VERIFY that the RESPONSE VALUE for essPaveTreatProductType.N is greater than or equal to 1.	Pass / Fail (Sec. 5.13.3.2)
26.3	VERIFY that the RESPONSE VALUE for essPaveTreatProductType.N is less than or equal to 14.	Pass / Fail (Sec. 5.13.3.2)
26.4	VERIFY that the RESPONSE VALUE for essPaveTreatProductType.N is APPROPRIATE.	Pass / Fail (Sec. 5.13.3.2)
26.5	VERIFY that the RESPONSE VALUE for essPaveTreatProductForm.N is greater than or equal to 1.	Pass / Fail (Sec. 5.13.3.3)
26.6	VERIFY that the RESPONSE VALUE for essPaveTreatProductForm.N is less than or equal to 4.	Pass / Fail (Sec. 5.13.3.3)
26.7	VERIFY that the RESPONSE VALUE for essPaveTreatProductForm.N is APPROPRIATE.	Pass / Fail (Sec. 5.13.3.3)
26.8	VERIFY that the RESPONSE VALUE for essPercentProductMix.N is greater than or equal to 0.	Pass / Fail (Sec. 5.13.3.4)
26.9	VERIFY that the RESPONSE VALUE for essPercentProductMix.N is less than or equal to 100.	Pass / Fail (Sec. 5.13.3.4)
26.10	VERIFY that the RESPONSE VALUE for essPercentProductMix.N is APPROPRIATE.	Pass / Fail (Sec. 5.13.3.4)

Test Case Results		
Tested By:	***Date Tested:***	***Pass / Fail***
Test Case Notes:		

© 2022 AASHTO / ITE / NEMA

C.2.3.4.4 Retrieve Adjacent Snow Depth [Versions 01 to 03]

Test Case: 4.4	***Title:***	*Retrieve Adjacent Snow Depth [Versions 01 to 03]*
	Description:	*This test case verifies that the ESS allows a management station to retrieve the current depth of snow adjacent to the traveled way.*
	Variables:	
	Pass/Fail Criteria:	*The device under test (DUT) shall pass every verification step included within the Test Case to pass the Test Case.*

Step	***Test Procedure***	***Device***
1	GET the following object(s): »essAdjacentSnowDepth.0	Pass / Fail (Sec. 3.5.2.3.3.4)
2	VERIFY that the RESPONSE VALUE for essAdjacentSnowDepth.0 is greater than or equal to 0.	Pass / Fail (Sec. 5.8.3)
3	VERIFY that the RESPONSE VALUE for essAdjacentSnowDepth.0 is less than or equal to 3001.	Pass / Fail (Sec. 5.8.3)
4	VERIFY that the RESPONSE VALUE for essAdjacentSnowDepth.0 is APPROPRIATE.	Pass / Fail (Sec. 5.8.3)

Test Case Results		
Tested By:	***Date Tested:***	***Pass / Fail***
Test Case Notes:		

© 2022 AASHTO / ITE / NEMA

C.2.3.4.5 Retrieve Roadway Snow Depth [Versions 01 to 03]

Test Case: 4.5	***Title:***	*Retrieve Roadway Snow Depth [Versions 01 to 03]*
	Description:	*This test case verifies that the ESS allows a management station to retrieve the current depth of snow and packed snow on the traveled way.*
	Variables:	
	Pass/Fail Criteria:	*The device under test (DUT) shall pass every verification step included within the Test Case to pass the Test Case.*

Step	***Test Procedure***	***Device***
1	GET the following object(s): »essRoadwaySnowDepth.0	Pass / Fail (Sec. 3.5.2.3.3.5)
2	VERIFY that the RESPONSE VALUE for essRoadwaySnowDepth.0 is greater than or equal to 0.	Pass / Fail (Sec. 5.8.4)
3	VERIFY that the RESPONSE VALUE for essRoadwaySnowDepth.0 is less than or equal to 3001.	Pass / Fail (Sec. 5.8.4)
4	VERIFY that the RESPONSE VALUE for essRoadwaySnowDepth.0 is APPROPRIATE.	Pass / Fail (Sec. 5.8.4)
5	GET the following object(s): »essRoadwaySnowPackDepth.0	Pass / Fail (Sec. 3.5.2.3.3.5)
6	VERIFY that the RESPONSE VALUE for essRoadwaySnowPackDepth.0 is greater than or equal to 0.	Pass / Fail (Sec. 5.8.5)
7	VERIFY that the RESPONSE VALUE for essRoadwaySnowPackDepth.0 is less than or equal to 3001.	Pass / Fail (Sec. 5.8.5)
8	VERIFY that the RESPONSE VALUE for essRoadwaySnowPackDepth.0 is APPROPRIATE.	Pass / Fail (Sec. 5.8.5)

Test Case Results		
Tested By:	***Date Tested:***	***Pass / Fail***
Test Case Notes:		

© 2022 AASHTO / ITE / NEMA

C.2.3.4.6 Retrieve Roadway Ice Thickness [Versions 01 to 03]

Test Case: 4.6	***Title:***	*Retrieve Roadway Ice Thickness [Versions 01 to 03]*
	Description:	*This test case verifies that the ESS allows a management station to retrieve the current thickness of ice on the traveled way.*
	Variables:	
	Pass/Fail Criteria:	*The device under test (DUT) shall pass every verification step included within the Test Case to pass the Test Case.*

Step	***Test Procedure***	***Device***
1	GET the following object(s): »essIceThickness.0	Pass / Fail (Sec. 3.5.2.3.3.6)
2	VERIFY that the RESPONSE VALUE for essIceThickness.0 is greater than or equal to 0.	Pass / Fail (Sec. 5.8.10)
3	VERIFY that the RESPONSE VALUE for essIceThickness.0 is less than or equal to 65535.	Pass / Fail (Sec. 5.8.10)
4	VERIFY that the RESPONSE VALUE for essIceThickness.0 is APPROPRIATE.	Pass / Fail (Sec. 5.8.10)

Test Case Results		
Tested By:	***Date Tested:***	***Pass / Fail***
Test Case Notes:		

© 2022 AASHTO / ITE / NEMA

C.2.3.4.7 Retrieve Compressed Pavement Condition Data

Test Case: 4.7	***Title:***	*Retrieve Compressed Pavement Condition Data*
	Description:	*This test case verifies that the ESS allows a management station to retrieve all current pavement condition data in compressed form.*
	Variables:	*Required_Pavement_Sensors* — *PRL 3.6.8* *Support_Icing* — *PRL 2.5.2.2.2*
	Pass/Fail Criteria:	*The device under test (DUT) shall pass every verification step included within the Test Case to pass the Test Case.*

Step	***Test Procedure***	***Device***
1	CONFIGURE: Determine the number of pavement sensors required by the specification (PRL 3.6.8). RECORD this information as: »Required_Pavement_Sensors	
2	CONFIGURE: Determine whether the ESS is required to support icing detection per the specification (PRL 2.5.2.2.2). RECORD this information as: »Support_Icing	
3	GET the following object(s): »essPavementV3Block.0	Pass / Fail (Sec. 3.5.2.3.3.7)
4	Decode the essPavementV3Block.0 structure.	
5	VERIFY that the essPavementV3Block.0 structure was decoded without error.	Pass / Fail (Sec. 5.11.9)
6	VERIFY that the EssPavementDataV3 structure contains at least Required_Pavement_Sensors entries.	Pass / Fail (Sec. 3.6.8)
7	FOR EACH value, N, from 1 to Required_Pavement_Sensors, perform Steps 7.1 through 7.12.	
7.1	VERIFY that the RESPONSE VALUE for the essPavementSensorIndex.x field of the essPavementV3Block.0 object is present.	Pass / Fail (Sec. 3.5.2.3.3.1)
7.2	VERIFY that the RESPONSE VALUE for essPavementSensorIndex.x is equal to N.	Pass / Fail (Sec. 5.11.3.1)
7.3	VERIFY that the RESPONSE VALUE for the essSurfaceStatus.x field of the essPavementV3Block.0 object is present.	Pass / Fail (Sec. 3.5.2.3.3.1)
7.4	VERIFY that the RESPONSE VALUE for essSurfaceStatus.x is between 1 and 14, inclusive.	Pass / Fail (Sec. 5.11.3.7)
7.5	VERIFY that the RESPONSE VALUE for essSurfaceStatus.x is APPROPRIATE.	Pass / Fail (Sec. 5.11.3.7)
7.6	VERIFY that the RESPONSE VALUE for the essSurfaceTemperature.x field of the essPavementV3Block.0 object is present.	Pass / Fail (Sec. 3.5.2.3.3.1)
7.7	VERIFY that the RESPONSE VALUE for essSurfaceTemperature.x is between -1000 and 1001, inclusive.	Pass / Fail (Sec. 5.11.3.8)
7.8	VERIFY that the RESPONSE VALUE for essSurfaceTemperature.x is APPROPRIATE.	Pass / Fail (Sec. 5.11.3.8)
7.9	IF Support_Icing is equal to true, then proceed to Step 7.9.1; otherwise, proceed to Step 7.10.	

Copy Per TRF Distribution Permission © 2022 AASHTO / ITE / NEMA

7.9.1	VERIFY that the RESPONSE VALUE for the essPavementTemperature.x field of the essPavementV3Block.0 object is present.	Pass / Fail (Sec. 3.5.2.3.3.2 or 3.5.2.3.3.3)
7.9.2	VERIFY that the RESPONSE VALUE for essPavementTemperature.x is between -1000 and 1001, inclusive.	Pass / Fail (Sec. 5.11.3.9)
7.9.3	VERIFY that the RESPONSE VALUE for essPavementTemperature.x is APPROPRIATE.	Pass / Fail (Sec. 5.11.3.9)
7.9.4	VERIFY that the RESPONSE VALUE for the essSurfaceFreezePoint.x field of the essPavementV3Block.0 object is present.	Pass / Fail (Sec. 3.5.2.3.3.2 or 3.5.2.3.3.3)
7.9.5	VERIFY that the RESPONSE VALUE for essSurfaceFreezePoint.x is between -1000 and 1001, inclusive.	Pass / Fail (Sec. 5.11.3.13)
7.9.6	VERIFY that the RESPONSE VALUE for essSurfaceFreezePoint.x is APPROPRIATE.	Pass / Fail (Sec. 5.11.3.13)
7.9.7	VERIFY that the RESPONSE VALUE for the essSurfaceBlackIceSignal.x field of the essPavementV3Block.0 object is present.	Pass / Fail (Sec. 3.5.2.3.3.2 or 3.5.2.3.3.3)
7.9.8	VERIFY that the RESPONSE VALUE for essSurfaceBlackIceSignal.x is between 1 and 4, inclusive.	Pass / Fail (Sec. 5.11.3.14)
7.9.9	VERIFY that the RESPONSE VALUE for essSurfaceBlackIceSignal.x is APPROPRIATE.	Pass / Fail (Sec. 5.11.3.14)
7.9.10	VERIFY that the RESPONSE VALUE for the essSurfaceIceOrWaterDepth.x field of the essPavementV3Block.0 object is present.	Pass / Fail (Sec. 3.5.2.3.3.2 or 3.5.2.3.3.3)
7.9.11	VERIFY that the RESPONSE VALUE for essSurfaceIceOrWaterDepth.x is between 0 and 65535, inclusive.	Pass / Fail (Sec. 5.11.3.16)
7.9.12	VERIFY that the RESPONSE VALUE for essSurfaceIceOrWaterDepth.x is APPROPRIATE.	Pass / Fail (Sec. 5.11.3.16)
7.9.13	GET the following object(s): »essPavementSensorType.N	Pass / Fail (RFC 1157)
7.9.14	IF the RESPONSE VALUE for essPavementSensorType.Subject_Pavement_Sensor is equal to contactPassive, then proceed to Step 7.9.14.1; otherwise, proceed to Step 7.10.	
7.9.14.1	VERIFY that the RESPONSE VALUE for the essSurfaceSalinity.x field of the essPavementV3Block.0 object is present.	Pass / Fail (Sec. 3.5.2.3.3.3)
7.9.14.2	VERIFY that the RESPONSE VALUE for essSurfaceSalinity.x is between 0 and 65535, inclusive.	Pass / Fail (Sec. 5.11.3.11)
7.9.14.3	VERIFY that the RESPONSE VALUE for essSurfaceSalinity.x is APPROPRIATE.	Pass / Fail (Sec. 5.11.3.11)
7.9.14.4	VERIFY that the RESPONSE VALUE for the essSurfaceConductivityV2.x field of the essPavementV3Block.0 object is present.	Pass / Fail (Sec. 3.5.2.3.3.3)
7.9.14.5	VERIFY that the RESPONSE VALUE for essSurfaceConductivityV2.x is between 0 and 65535, inclusive.	Pass / Fail (Sec. 5.11.3.17)

© 2022 AASHTO / ITE / NEMA Copy Per TRF Distribution Permission

7.9.14.6	VERIFY that the RESPONSE VALUE for essSurfaceConductivityV2.x is APPROPRIATE.	Pass / Fail (Sec. 5.11.3.17)
7.10	VERIFY that the RESPONSE VALUE for the essPavementSensorError.x field of the essPavementV3Block.0 object is present.	Pass / Fail (Sec. 3.5.2.3.3.1)
7.11	VERIFY that the RESPONSE VALUE for essPavementSensorError.x is between 1 and 6, inclusive.	Pass / Fail (Sec. 5.11.3.15)
7.12	VERIFY that the RESPONSE VALUE for essPavementSensorError.x is APPROPRIATE.	Pass / Fail (Sec. 5.11.3.15)

Test Case Results		
Tested By:	***Date Tested:***	***Pass / Fail***
Test Case Notes:		

© 2022 AASHTO / ITE / NEMA

C.2.3.4.8 Retrieve Basic Subsurface Conditions

Test Case: 4.8	***Title:***	*Retrieve Basic Subsurface Conditions*	
	Description:	*This test case verifies that the ESS allows a management station to retrieve the current subsurface information.*	
	Variables:	*Required_Subsurface_Sensors*	*PRL 3.6.11*
	Pass/Fail Criteria:	*The device under test (DUT) shall pass every verification step included within the Test Case to pass the Test Case.*	

Step	***Test Procedure***	***Device***
1	CONFIGURE: Determine the number of subsurface sensors required by the specification (PRL 3.6.11). RECORD this information as: »Required_Subsurface_Sensors	
2	GET the following object(s): »numEssSubSurfaceSensors.0	Pass / Fail (RFC 1157)
3	VERIFY that the RESPONSE VALUE for numEssSubSurfaceSensors.0 is greater than or equal to Required_Subsurface_Sensors.	Pass / Fail (Sec. 5.11.4)
4	Determine a random number between 1 and Required_Subsurface_Sensors. RECORD this information as: »Subject_Sensor	
5	GET the following object(s): »essSubSurfaceTemperature.Subject_Sensor »essSubSurfaceSensorError.Subject_Sensor	Pass / Fail (Sec. 3.5.2.3.4.1)
6	VERIFY that the RESPONSE VALUE for essSubSurfaceTemperature.Subject_Sensor is greater than or equal to -1000.	Pass / Fail (Sec. 5.11.6.5)
7	VERIFY that the RESPONSE VALUE for essSubSurfaceTemperature.Subject_Sensor is less than or equal to 1001.	Pass / Fail (Sec. 5.11.6.5)
8	VERIFY that the RESPONSE VALUE for essSubSurfaceTemperature.Subject_Sensor is APPROPRIATE.	Pass / Fail (Sec. 5.11.6.5)
9	VERIFY that the RESPONSE VALUE for essSubSurfaceSensorError.Subject_Sensor is greater than or equal to 1.	Pass / Fail (Sec. 5.11.6.7)
10	VERIFY that the RESPONSE VALUE for essSubSurfaceSensorError.Subject_Sensor is less than or equal to 5.	Pass / Fail (Sec. 5.11.6.7)
11	VERIFY that the RESPONSE VALUE for essSubSurfaceSensorError.Subject_Sensor is APPROPRIATE.	Pass / Fail (Sec. 5.11.6.7)

Test Case Results		
Tested By:	***Date Tested:***	***Pass / Fail***
Test Case Notes:		

© 2022 AASHTO / ITE / NEMA

C.2.3.4.9 Retrieve Subsurface Moisture

Test Case: 4.9	***Title:***	*Retrieve Subsurface Moisture*	
	Description:	*This test case verifies that the ESS allows a management station to retrieve the amount of moisture currently present in the subsurface of the roadway.*	
	Variables:	*Required_Subsurface_Sensors*	*PRL 3.6.11*
	Pass/Fail Criteria:	*The device under test (DUT) shall pass every verification step included within the Test Case to pass the Test Case.*	

Step	***Test Procedure***	***Device***
1	CONFIGURE: Determine the number of subsurface sensors required by the specification (PRL 3.6.11). RECORD this information as: »Required_Subsurface_Sensors	
2	Determine a random number between 1 and Required_Subsurface_Sensors. RECORD this information as: »Subject_Sensor	
3	GET the following object(s): »essSubSurfaceMoisture.Subject_Sensor	Pass / Fail (Sec. 3.5.2.3.4.2)
4	VERIFY that the RESPONSE VALUE for essSubSurfaceMoisture.Subject_Sensor is greater than or equal to 0.	Pass / Fail (Sec. 5.11.6.6)
5	VERIFY that the RESPONSE VALUE for essSubSurfaceMoisture.Subject_Sensor is less than or equal to 101.	Pass / Fail (Sec. 5.11.6.6)
6	VERIFY that the RESPONSE VALUE for essSubSurfaceMoisture.Subject_Sensor is APPROPRIATE.	Pass / Fail (Sec. 5.11.6.6)

Test Case Results		
Tested By:	***Date Tested:***	***Pass / Fail***
Test Case Notes:		

© 2022 AASHTO / ITE / NEMA

C.2.3.4.10 Retrieve Compressed Subsurface Condition Data

Test Case: 4.10	***Title:***	*Retrieve Compressed Subsurface Condition Data*
	Description:	*This test case verifies that the ESS allows a management station to retrieve all current subsurface condition information in a compressed form.*
	Variables:	*Required_Subsurface_Sensors* — *PRL 3.6.11* *Moisture_Supported* — *PRL 3.5.2.3.4.2*
	Pass/Fail Criteria:	*The device under test (DUT) shall pass every verification step included within the Test Case to pass the Test Case.*

Step	***Test Procedure***	***Device***
1	CONFIGURE: Determine the number of subsurface sensors required by the specification (PRL 3.6.11). RECORD this information as: »Required_Subsurface_Sensors	
2	CONFIGURE: Determine whether the ESS is required to monitor subsurface moisture (PRL 3.5.2.3.4.2). RECORD this information as: »Moisture_Supported	
3	GET the following object(s): »essSubsurfaceDataessSubsurfaceBlock.0	Pass / Fail (Sec. 3.5.2.3.4.3)
4	Decode the essSubsurfaceDataessSubsurfaceBlock.0 structure.	
5	VERIFY that the essSubsurfaceBlock.0 structure was decoded without error.	Pass / Fail (Sec. 5.11.8)
6	VERIFY that the SubSurfaceSensorData structure contains at least Required_Subsurface_Sensors entries.	Pass / Fail (Sec. 3.6.11)
7	FOR EACH value, N, from 1 to Required_Subsurface_Sensors, perform Steps 7.1 through 7.9.	
7.1	VERIFY that the RESPONSE VALUE for the essSubSurfaceSensorIndex.x field of the Nth SubSurfaceSensorData field is present.	Pass / Fail (Sec. 3.5.2.3.4.1)
7.2	VERIFY that the RESPONSE VALUE for essSubSurfaceSensorIndex.x is equal to N.	Pass / Fail (Sec. 5.11.6.1)
7.3	VERIFY that the RESPONSE VALUE for the essSubSurfaceTemperature.x field of the Nth SubSurfaceSensorData field is present.	Pass / Fail (Sec. 3.5.2.3.4.1)
7.4	VERIFY that the RESPONSE VALUE for essSubSurfaceTemperature.x is between -1000 and 1001, inclusive.	Pass / Fail (Sec. 5.11.6.5)
7.5	VERIFY that the RESPONSE VALUE for essSubSurfaceTemperature.x is APPROPRIATE.	Pass / Fail (Sec. 5.11.6.5)
7.6	IF Moisture_Supported is equal to 1, then proceed to Step 7.6.1; otherwise, proceed to Step 7.7.	
7.6.1	VERIFY that the RESPONSE VALUE for the essSubSurfaceMoisture.x field of the Nth SubSurfaceSensorData field is present.	Pass / Fail (Sec. 3.5.2.3.4.2)
7.6.2	VERIFY that the RESPONSE VALUE for essSubSurfaceMoisture.x is between 0 and 101, inclusive.	Pass / Fail (Sec. 5.11.6.6)
7.6.3	VERIFY that the RESPONSE VALUE for essSubSurfaceMoisture.x is APPROPRIATE.	Pass / Fail (Sec. 5.11.6.6)

© 2022 AASHTO / ITE / NEMA Copy Per TRF Distribution Permission

7.7	VERIFY that the RESPONSE VALUE for the essSubSurfaceSensorError.x field of the Nth SubSurfaceSensorData field is present.	Pass / Fail (Sec. 3.5.2.3.4.1)
7.8	VERIFY that the RESPONSE VALUE for essSubSurfaceSensorError.x is between 1 and 5, inclusive.	Pass / Fail (Sec. 5.11.6.7)
7.9	VERIFY that the RESPONSE VALUE for essSubSurfaceSensorError.x is APPROPRIATE.	Pass / Fail (Sec. 5.11.6.7)

Test Case Results		
Tested By:	***Date Tested:***	***Pass / Fail***
Test Case Notes:		

© 2022 AASHTO / ITE / NEMA

C.2.3.4.11 Retrieve Pavement Surface Condition

Test Case: 4.11	***Title:***	*Retrieve Pavement Surface Condition*	
	Description:	*This test case verifies that the ESS allows a management station to retrieve pavement surface condition readings of each pavement sensor.*	
	Variables:	*Supported_Pavement_Sensors*	*(PRL 3.6.8)*
	Pass/Fail Criteria:	*The device under test (DUT) shall pass every verification step included within the Test Case in order to pass the Test Case.*	

Step	***Test Procedure***	***Device***
1	CONFIGURE: Determine the number of pavement sensors that the ESS is required to support.	
2	GET the following object(s): » numEssPavementSensors.0	Pass / Fail (Clause 3.5.2.3.3.8)
3	VERIFY that the RESPONSE VALUE for numEssPavementSensors.0 is greater than or equal to Supported_Pavement_Sensors.	Pass / Fail (PRL 3.6.8)
4	Determine the RESPONSE VALUE for numEssPavementSensors.0. RECORD this information as: »Supported_Pavement_Sensors	
5	FOR EACH value, N, from 1 to Supported_Pavement_Sensors, perform Steps 5.1 through 5.8.	
5.1	GET the following object(s): »essSurfaceTemperature.N »essPavementSensorError.N »pavementSensorSurfaceCondition.N	Pass / Fail (Clause 3.5.2.3.3.8)
5.2	VERIFY that the RESPONSE VALUE for essSurfaceTemperature.N is greater than or equal to -1000.	Pass / Fail (Clause 5.11.3.8)
5.3	VERIFY that the RESPONSE VALUE for essSurfaceTemperature.N is less than or equal to 1001.	Pass / Fail (Clause 5.11.3.8)
5.4	VERIFY that the RESPONSE VALUE for essSurfaceTemperature.N is APPROPRIATE.	Pass / Fail (Clause 5.11.3.8)
5.5	VERIFY that the RESPONSE VALUE for essPavementSensorError.N is equal to one of the following values: other (1), none (2), noResponse (3), cutCable (4), shortCircuit (5), dirtyLens (6)	Pass / Fail (Clause 5.11.3.15)
5.6	VERIFY that the RESPONSE VALUE for essPavementSensorError.N is APPROPRIATE.	Pass / Fail (Clause 5.11.3.15)
5.7	VERIFY that the RESPONSE VALUE for pavementSensorSurfaceCondition.N is equal to one of the following values: other (1), error (2), dry (3), moist (4), chemicallyMoist (5), wet (6), chemicallyWet (7),	Pass / Fail (Clause 5.11.3.22)

© 2022 AASHTO / ITE / NEMA

	standingWater (8), frost (9), slush (10), snow (11), ice (12), noReport (13).	
5.8	VERIFY that the RESPONSE VALUE for pavementSensorSurfaceCondition.N is APPROPRIATE.	Pass / Fail (Clause 5.11.3.22)

Test Case Results		
Tested By:	***Date Tested:***	***Pass / Fail***
Test Case Notes:		

© 2022 AASHTO / ITE / NEMA

C.2.3.4.12 Retrieve Forecasted Pavement Surface Condition

Test Case: 4.12	***Title:***	*Retrieve Forecasted Pavement Surface Condition*	
	Description:	*This test case verifies that the ESS allows a management station to retrieve forecasted pavement surface condition readings of each pavement sensor.*	
	Variables:	*Supported_Pavement_Sensors*	*(PRL 3.6.8)*
	Pass/Fail Criteria:	*The device under test (DUT) shall pass every verification step included within the Test Case in order to pass the Test Case.*	

Step	***Test Procedure***	***Device***
1	CONFIGURE: Determine the number of pavement sensors that the ESS is required to support.	
2	GET the following object(s): » numEssPavementSensors.0	Pass / Fail (Clause 3.5.2.3.3.9)
3	VERIFY that the RESPONSE VALUE for numEssPavementSensors.0 is greater than or equal to Supported_Pavement_Sensors.	Pass / Fail (PRL 3.6.8)
4	Determine the RESPONSE VALUE for numEssPavementSensors.0. RECORD this information as: »Supported_Pavement_Sensors	
5	FOR EACH value, N, from 1 to Supported_Pavement_Sensors, perform Steps 5.1 through 5.3.	
5.1	GET the following object(s): »pavementSensorForecastCondition.N	Pass / Fail (Clause 3.5.2.3.3.9)
5.2	VERIFY that the RESPONSE VALUE for pavementSensorForecastCondition.N is equal to one of the following values: other (1), error (2), noAdvisoryForecasted (3), iceAdvisory (4), slushAdvisory(5), freezeAdvisory (6), freezeHazard (7), noReport (8).	Pass / Fail (Clause 5.11.3.23)
5.3	VERIFY that the RESPONSE VALUE for pavementSensorForecastCondition.N is APPROPRIATE.	Pass / Fail (Clause 5.11.3.23)

Test Case Results		
Tested By:	***Date Tested:***	***Pass / Fail***
Test Case Notes:		

© 2022 AASHTO / ITE / NEMA

C.2.3.4.13 Retrieve Roadway Friction Coefficient

Test Case: 4.13	***Title:***	*Retrieve Roadway Friction Coefficient*	
	Description:	*This test case verifies that the ESS allows a management station to retrieve the roadway friction readings of each pavement sensor.*	
	Variables:	*Supported_Pavement_Sensors*	*(PRL 3.6.8)*
	Pass/Fail Criteria:	*The device under test (DUT) shall pass every verification step included within the Test Case in order to pass the Test Case.*	

Step	***Test Procedure***	***Device***
1	CONFIGURE: Determine the number of pavement sensors that the ESS is required to support.	
2	GET the following object(s): » numEssPavementSensors.0	Pass / Fail (Clause 3.5.2.3.3.10.1)
3	VERIFY that the RESPONSE VALUE for numEssPavementSensors.0 is greater than or equal to Supported_Pavement_Sensors.	Pass / Fail (PRL 3.6.8)
4	Determine the RESPONSE VALUE for numEssPavementSensors.0. RECORD this information as: »Supported_Pavement_Sensors	
5	FOR EACH value, N, from 1 to Supported_Pavement_Sensors, perform Steps 5.1 through 5.4.	
5.1	GET the following object(s): »pavementSensorFrictionCoefficient.N	Pass / Fail (Clause 3.5.2.3.3.10.1)
5.2	VERIFY that the RESPONSE VALUE for pavementSensorFrictionCoefficient.N is greater than or equal to 0.	Pass / Fail (Clause 5.11.3.24)
5.3	VERIFY that the RESPONSE VALUE for pavementSensorFrictionCoefficient.N is less than or equal to 101.	Pass / Fail (Clause 5.11.3.24)
5.4	VERIFY that the RESPONSE VALUE for pavementSensorFrictionCoefficient.N is APPROPRIATE.	Pass / Fail (Clause 5.11.3.24)

Test Case Results		
Tested By:	***Date Tested:***	***Pass / Fail***
Test Case Notes:		

© 2022 AASHTO / ITE / NEMA

C.2.3.4.14 Retrieve Adjacent Snow Depth

Test Case: 4.14	***Title:***	*Retrieve Adjacent Snow Depth*
	Description:	*This test case verifies that the ESS allows a management station to retrieve the current depth of snow adjacent to the traveled way.*
	Variables:	
	Pass/Fail Criteria:	*The device under test (DUT) shall pass every verification step included within the Test Case to pass the Test Case.*

Step	***Test Procedure***	***Device***
1	GET the following object(s): »precipitationSensorAdjacentSnowDepth.0	Pass / Fail (Sec. 3.5.2.3.3.4)
2	VERIFY that the RESPONSE VALUE for precipitationSensorAdjacentSnowDepth.0 is greater than or equal to 0.	Pass / Fail (Sec. 5.8.24.8)
3	VERIFY that the RESPONSE VALUE for precipitationSensorAdjacentSnowDepth.0 is less than or equal to 3001.	Pass / Fail (Sec. 5.8.24.8)
4	VERIFY that the RESPONSE VALUE for precipitationSensorAdjacentSnowDepth.0 is APPROPRIATE.	Pass / Fail (Sec. 5.8.24.8)

Test Case Results

Tested By:	***Date Tested:***	***Pass / Fail***

Test Case Notes:

© 2022 AASHTO / ITE / NEMA

C.2.3.4.15 Retrieve Roadway Snow Depth

Test Case: 4.15	***Title:***	*Retrieve Roadway Snow Depth*
	Description:	*This test case verifies that the ESS allows a management station to retrieve the current depth of snow and packed snow on the traveled way.*
	Variables:	
	Pass/Fail Criteria:	*The device under test (DUT) shall pass every verification step included within the Test Case to pass the Test Case.*

Step	***Test Procedure***	***Device***
1	GET the following object(s): »precipitationSensorRoadwaySnowDepth.0	Pass / Fail (Sec. 3.5.2.3.3.5)
2	VERIFY that the RESPONSE VALUE for precipitationSensorRoadwaySnowDepth.0 is greater than or equal to 0.	Pass / Fail (Sec. 5.8.24.9)
3	VERIFY that the RESPONSE VALUE for precipitationSensorRoadwaySnowDepth.0 is less than or equal to 3001.	Pass / Fail (Sec. 5.8.24.9)
4	VERIFY that the RESPONSE VALUE for precipitationSensorRoadwaySnowDepth.0 is APPROPRIATE.	Pass / Fail (Sec. 5.8.24.9)
5	GET the following object(s): »precipitationSensorRoadwaySnowPackDepth.0	Pass / Fail (Sec. 3.5.2.3.3.5)
6	VERIFY that the RESPONSE VALUE for precipitationSensorRoadwaySnowPackDepth.0 is greater than or equal to 0.	Pass / Fail (Sec. 5.8.24.10)
7	VERIFY that the RESPONSE VALUE for precipitationSensorRoadwaySnowPackDepth.0 is less than or equal to 3001.	Pass / Fail (Sec. 5.8.24.10)
8	VERIFY that the RESPONSE VALUE for precipitationSensorRoadwaySnowPackDepth.0 is APPROPRIATE.	Pass / Fail (Sec. 5.8.24.10)

Test Case Results		
Tested By:	***Date Tested:***	***Pass / Fail***
Test Case Notes:		

© 2022 AASHTO / ITE / NEMA

C.2.3.4.16 Retrieve Roadway Ice Thickness

Test Case: 4.16	***Title:***	*Retrieve Roadway Ice Thickness*
	Description:	*This test case verifies that the ESS allows a management station to retrieve the current thickness of ice on the traveled way.*
	Variables:	
	Pass/Fail Criteria:	*The device under test (DUT) shall pass every verification step included within the Test Case to pass the Test Case.*

Step	***Test Procedure***	***Device***
1	GET the following object(s): »precipitationSensorIceThickness.0	Pass / Fail (Sec. 3.5.2.3.3.6)
2	VERIFY that the RESPONSE VALUE for precipitationSensorIceThickness.0 is greater than or equal to 0.	Pass / Fail (Sec. 5.8.24.15)
3	VERIFY that the RESPONSE VALUE for precipitationSensorIceThickness.0 is less than or equal to 65535.	Pass / Fail (Sec. 5.8.24.15)
4	VERIFY that the RESPONSE VALUE for precipitationSensorIceThickness.0 is APPROPRIATE.	Pass / Fail (Sec. 5.8.24.15)

Test Case Results		
Tested By:	***Date Tested:***	***Pass / Fail***
Test Case Notes:		

© 2022 AASHTO / ITE / NEMA

C.2.3.5 Situation Tests

C.2.3.5.1 Retrieve Wind Situation

Test Case: 5.1	***Title:***	*Retrieve Wind Situation*
	Description:	*This test case verifies that the ESS allows a management station to retrieve the assessment of the wind situation.*
	Variables:	
	Pass/Fail Criteria:	*The device under test (DUT) shall pass every verification step included within the Test Case to pass the Test Case.*

Step	***Test Procedure***	***Device***
1	GET the following object(s): »windSensorTableNumSensors.0	Pass / Fail (Sec. 3.5.2.3.5.1)
2	Determine the RESPONSE VALUE for windSensorTableNumSensors.0. RECORD this information as: »Supported_Wind_Sensors	
3	FOR EACH value, N, from 1 to Supported_Wind_Sensors, perform Steps 3.1 through 3.4.	
3.1	GET the following object(s): »windSensorSituation.N	Pass / Fail (Sec. 3.5.2.3.5.1)
3.2	VERIFY that the RESPONSE VALUE for windSensorSituation.N is greater than or equal to 1.	Pass / Fail (Sec. 5.6.10.10)
3.3	VERIFY that the RESPONSE VALUE for windSensorSituation.N is less than or equal to 12.	Pass / Fail (Sec. 5.6.10.10)
3.4	VERIFY that the RESPONSE VALUE for windSensorSituation.N is APPROPRIATE.	Pass / Fail (Sec. 5.6.10.10)

Test Case Results		
Tested By:63	***Date Tested:***	***Pass / Fail***
Test Case Notes:		

© 2022 AASHTO / ITE / NEMA

C.2.3.5.2 Retrieve Precipitation Situation

Test Case: 5.2	***Title:***	*Retrieve Precipitation Situation*
	Description:	*This test case verifies that the ESS allows a management station to retrieve the assessment of the precipitation situation.*
	Variables:	
	Pass/Fail Criteria:	*The device under test (DUT) shall pass every verification step included within the Test Case to pass the Test Case.*

Step	***Test Procedure***	***Device***
1	GET the following object(s): »essPrecipSituation.0	Pass / Fail (Sec. 3.5.2.3.5.2)
2	VERIFY that the RESPONSE VALUE for essPrecipSituation.0 is greater than or equal to 1.	Pass / Fail (Sec. 5.8.9)
3	VERIFY that the RESPONSE VALUE for essPrecipSituation.0 is less than or equal to 15.	Pass / Fail (Sec. 5.8.9)
4	VERIFY that the RESPONSE VALUE for essPrecipSituation.0 is APPROPRIATE.	Pass / Fail (Sec. 5.8.9)

Test Case Results		
Tested By:	***Date Tested:***	***Pass / Fail***
Test Case Notes:		

© 2022 AASHTO / ITE / NEMA

C.2.3.5.3 Retrieve Cloud Situation [Versions 01 to 03]

Test Case: 5.3	***Title:***	*Retrieve Cloud Situation [Versions 01 to 03]*
	Description:	*This test case verifies that the ESS allows a management station to retrieve the assessment of the cloud situation.*
	Variables:	
	Pass/Fail Criteria:	*The device under test (DUT) shall pass every verification step included within the Test Case to pass the Test Case.*

Step	***Test Procedure***	***Device***
1	GET the following object(s): »essCloudSituation.0	Pass / Fail (Sec. 3.5.2.3.5.3)
2	VERIFY that the RESPONSE VALUE for essCloudSituation.0 is greater than or equal to 1.	Pass / Fail (Sec. 5.9.3)
3	VERIFY that the RESPONSE VALUE for essCloudSituation.0 is less than or equal to 5.	Pass / Fail (Sec. 5.9.3)
4	VERIFY that the RESPONSE VALUE for essCloudSituation.0 is APPROPRIATE.	Pass / Fail (Sec. 5.9.3)

Test Case Results		
Tested By:	***Date Tested:***	***Pass / Fail***
Test Case Notes:		

© 2022 AASHTO / ITE / NEMA

C.2.3.5.4 Retrieve Visibility Situation

Test Case: 5.4	***Title:***	*Retrieve Visibility Situation*
	Description:	*This test case verifies that the ESS allows a management station to retrieve the assessment of the visibility situation.*
	Variables:	
	Pass/Fail Criteria:	*The device under test (DUT) shall pass every verification step included within the Test Case to pass the Test Case.*

Step	***Test Procedure***	***Device***
1	GET the following object(s): »essVisibilitySituation.0	Pass / Fail (Sec. 3.5.2.3.5.4)
2	VERIFY that the RESPONSE VALUE for essVisibilitySituation.0 is greater than or equal to 1.	Pass / Fail (Sec. 5.10.2)
3	VERIFY that the RESPONSE VALUE for essVisibilitySituation.0 is less than or equal to 12.	Pass / Fail (Sec. 5.10.2)
4	VERIFY that the RESPONSE VALUE for essVisibilitySituation.0 is APPROPRIATE.	Pass / Fail (Sec. 5.10.2)

Test Case Results		
Tested By:	***Date Tested:***	***Pass / Fail***
Test Case Notes:		

© 2022 AASHTO / ITE / NEMA

C.2.3.5.5 Retrieve Ground State [Versions 01 to 03]

Test Case: 5.5	***Title:***	*Retrieve Ground State [Versions 01 to 03]*
	Description:	*This test case verifies that the ESS allows a management station to retrieve the assessment of the ground state next to the roadway.*
	Variables:	
	Pass/Fail Criteria:	*The device under test (DUT) shall pass every verification step included within the Test Case to pass the Test Case.*

Step	***Test Procedure***	***Device***
1	GET the following object(s): »essMobileObservationGroundState.0	Pass / Fail (Sec. 3.5.2.3.5.5)
2	VERIFY that the RESPONSE VALUE for essMobileObservationGroundState.0 is greater than or equal to 1.	Pass / Fail (Sec. 5.12.2)
3	VERIFY that the RESPONSE VALUE for essMobileObservationGroundState.0 is less than or equal to 18.	Pass / Fail (Sec. 5.12.2)
4	VERIFY that the RESPONSE VALUE for essMobileObservationGroundState.0 is APPROPRIATE.	Pass / Fail (Sec. 5.12.2)

Test Case Results		
Tested By:	***Date Tested:***	***Pass / Fail***
Test Case Notes:		

© 2022 AASHTO / ITE / NEMA

C.2.3.5.6 Retrieve Pavement State [Versions 01 to 03]

Test Case: 5.6	***Title:***	*Retrieve Pavement State [Versions 01 to 03]*
	Description:	*This test case verifies that the ESS allows a management station to retrieve the assessment of the pavement state.*
	Variables:	
	Pass/Fail Criteria:	*The device under test (DUT) shall pass every verification step included within the Test Case to pass the Test Case.*

Step	***Test Procedure***	***Device***
1	GET the following object(s): »essMobileObservationPavement.0	Pass / Fail (Sec. 3.5.2.3.5.6)
2	VERIFY that the RESPONSE VALUE for essMobileObservationPavement.0 is greater than or equal to 1.	Pass / Fail (Sec. 5.12.3)
3	VERIFY that the RESPONSE VALUE for essMobileObservationPavement.0 is less than or equal to 25.	Pass / Fail (Sec. 5.12.3)
4	VERIFY that the RESPONSE VALUE for essMobileObservationPavement.0 is APPROPRIATE.	Pass / Fail (Sec. 5.12.3)

Test Case Results		
Tested By:	***Date Tested:***	***Pass / Fail***
Test Case Notes:		

© 2022 AASHTO / ITE / NEMA

C.2.3.5.7 Retrieve Cloud Situation

Test Case: 5.7	***Title:***	*Retrieve Cloud Situation*	
	Description:	*This test case verifies that the ESS allows a management station to retrieve the cloud situation of each visibility sensor. (Measured in Oktas.)*	
	Variables:	*Supported_Visibility_Sensors*	*FR 3.6.7*
	Pass/Fail Criteria:	*The device under test (DUT) shall pass every verification step included within the Test Case in order to pass the Test Case.*	

Step	***Test Procedure***	***Device***
1	CONFIGURE: Determine the number of visibility sensors that the ESS is required to support.	
2	GET the following object(s): » visibilitySensorTableNumSensors.0	Pass / Fail (Clause 3.5.2.3.5.7)
3	VERIFY that the RESPONSE VALUE for visibilitySensorTableNumSensors.0 is greater than or equal to Supported_Visibility_Sensors.	Pass / Fail (Clause 3.5.2.3.5.7)
4	Determine the RESPONSE VALUE for visibilitySensorTableNumSensors.0. RECORD this information as: »Supported_Visibility_Sensors	
5	FOR EACH value, N, from 1 to Supported_Visibility_Sensors, perform Steps 5.1 through 5.4.	
5.1	GET the following object(s): »essCloudSituationV4.N	Pass / Fail (Clause 3.5.2.3.5.7)
5.2	VERIFY that the RESPONSE VALUE for essCloudSituationV4.N is greater than or equal to 0.	Pass / Fail (Clause 5.9.11)
5.3	VERIFY that the RESPONSE VALUE for essCloudSituationV4.N is less than or equal to 8.	Pass / Fail (Clause 5.9.11)
5.4	VERIFY that the RESPONSE VALUE for essCloudSituationV4.N is APPROPRIATE.	Pass / Fail (Clause 5.9.11)

Test Case Results		
Tested By:	***Date Tested:***	***Pass / Fail***
Test Case Notes:		

© 2022 AASHTO / ITE / NEMA

C.2.3.5.8 Retrieve Ground State

Test Case: 5.8	***Title:***	*Retrieve Ground State*
	Description:	*This test case verifies that the ESS allows a management station to retrieve the assessment of the ground state next to the roadway.*
	Variables:	
	Pass/Fail Criteria:	*The device under test (DUT) shall pass every verification step included within the Test Case to pass the Test Case.*

Step	***Test Procedure***	***Device***
1	GET the following object(s): »essMobileObservationGroundStateV4.0	Pass / Fail (Sec. 3.5.2.3.5.8)
2	VERIFY that the RESPONSE VALUE for essMobileObservationGroundStateV4.0 is greater than or equal to 1.	Pass / Fail (Sec. 5.12.4)
3	VERIFY that the RESPONSE VALUE for essMobileObservationGroundStateV4.0 is less than or equal to 18.	Pass / Fail (Sec. 5.12.4)
4	VERIFY that the RESPONSE VALUE for essMobileObservationGroundStateV4.0 is APPROPRIATE.	Pass / Fail (Sec. 5.12.4)

Test Case Results

Tested By:	***Date Tested:***	***Pass / Fail***

Test Case Notes:

© 2022 AASHTO / ITE / NEMA

C.2.3.5.9 Retrieve Pavement State

Test Case: 5.9	***Title:***	*Retrieve Pavement State*
	Description:	*This test case verifies that the ESS allows a management station to retrieve the assessment of the pavement state.*
	Variables:	
	Pass/Fail Criteria:	*The device under test (DUT) shall pass every verification step included within the Test Case to pass the Test Case.*

Step	***Test Procedure***	***Device***
1	GET the following object(s): » essMobileObservationPavementV4.0	Pass / Fail (Sec. 3.5.2.3.5.9)
2	VERIFY that the RESPONSE VALUE for essMobileObservationPavementV4.0 is greater than or equal to 1.	Pass / Fail (Sec. 5.12.5)
3	VERIFY that the RESPONSE VALUE for essMobileObservationPavementV4.0 is less than or equal to 34.	Pass / Fail (Sec. 5.12.5)
4	VERIFY that the RESPONSE VALUE for essMobileObservationPavementV4.0 is APPROPRIATE.	Pass / Fail (Sec. 5.12.5)

Test Case Results

Tested By:	***Date Tested:***	***Pass / Fail***

Test Case Notes:

© 2022 AASHTO / ITE / NEMA

C.2.3.6 Air Quality Tests

C.2.3.6.1 Retrieve Carbon Monoxide Reading

Test Case: 6.1	***Title:***	*Retrieve Carbon Monoxide Reading*	
	Description:	*This test case verifies that the ESS allows a management station to retrieve the current carbon monoxide reading.*	
	Variables:	*Required_CO_Sensors*	*(PRL 3.6.13)*
	Pass/Fail Criteria:	*The device under test (DUT) shall pass every verification step included within the Test Case to pass the Test Case.*	

Step	***Test Procedure***	***Device***
1	CONFIGURE: Determine the number of carbon monoxide sensors required by the specification (PRL 3.6.13). RECORD this information as: »Required_CO_Sensors	
2	GET the following object(s): »airQualitySensorTableNumSensors.0	
3	VERIFY that the RESPONSE VALUE for airQualitySensorTableNumSensors.0 is greater than or equal to Required_CO_Sensors.	Pass / Fail (Sec. 3.6.13)
4	GET the following object(s): »essCO.0	Pass / Fail (Sec. 3.5.2.3.6.1)
5	VERIFY that the RESPONSE VALUE for essCO.0 is greater than or equal to 0.	Pass / Fail (Sec. 5.14.1)
6	VERIFY that the RESPONSE VALUE for essCO.0 is less than or equal to 255.	Pass / Fail (Sec. 5.14.1)
7	VERIFY that the RESPONSE VALUE for essCO.0 is APPROPRIATE.	Pass / Fail (Sec. 5.14.1)

Test Case Results		
Tested By:	***Date Tested:***	***Pass / Fail***
Test Case Notes:		

© 2022 AASHTO / ITE / NEMA

C.2.3.6.2 Retrieve Carbon Dioxide Reading [Versions 01 to 03]

Test Case: 6.2	***Title:***	*Retrieve Carbon Dioxide Reading [Versions 01 to 03]*	
	Description:	*This test case verifies that the ESS allows a management station to retrieve the current carbon dioxide reading.*	
	Variables:	*Required_CO2_Sensors*	*(PRL 3.6.14)*
	Pass/Fail Criteria:	*The device under test (DUT) shall pass every verification step included within the Test Case to pass the Test Case.*	

Step	***Test Procedure***	***Device***
1	CONFIGURE: Determine the number of carbon dioxide sensors required by the specification (PRL 3.6.14). RECORD this information as: »Required_CO2_Sensors	
2	GET the following object(s): »airQualitySensorTableNumSensors.0	
3	VERIFY that the RESPONSE VALUE for airQualitySensorTableNumSensors.0 is greater than or equal to Required_CO2_Sensors.	Pass / Fail (Sec. 3.6.14)
4	GET the following object(s): »essCO2.0	Pass / Fail (Sec. 3.5.4.39)
5	VERIFY that the RESPONSE VALUE for essCO2.0 is greater than or equal to 0.	Pass / Fail (Sec. 5.14.2)
6	VERIFY that the RESPONSE VALUE for essCO2.0 is less than or equal to 65535.	Pass / Fail (Sec. 5.14.2)
7	VERIFY that the RESPONSE VALUE for essCO2.0 is APPROPRIATE.	Pass / Fail (Sec. 5.14.2)

Test Case Results		
Tested By:	***Date Tested:***	***Pass / Fail***
Test Case Notes:		

© 2022 AASHTO / ITE / NEMA

C.2.3.6.3 Retrieve Nitric Oxide Reading [Versions 01 to 03]

Test Case: 6.3	***Title:***	*Retrieve Nitric Oxide Reading [Versions 01 to 03]*
	Description:	*This test case verifies that the ESS allows a management station to retrieve the current nitric oxide reading.*
	Variables:	*Required_CO_Sensors (PRL 3.6.13)* *Required_NO_Sensors (PRL 3.6.15)*
	Pass/Fail Criteria:	*The device under test (DUT) shall pass every verification step included within the Test Case to pass the Test Case.*

Step	***Test Procedure***	***Device***
1	CONFIGURE: Determine the number of nitric oxide sensors required by the specification (PRL 3.6.15). RECORD this information as: »Required_NO_Sensors	
2	GET the following object(s): »airQualitySensorTableNumSensors.0	
3	VERIFY that the RESPONSE VALUE for airQualitySensorTableNumSensors.0 is greater than or equal to Required_NO_Sensors.	Pass / Fail (Sec. 3.6.15)
4	GET the following object(s): »essNO.0	Pass / Fail (Sec. 3.5.4.40)
5	VERIFY that the RESPONSE VALUE for essNO.0 is greater than or equal to 0.	Pass / Fail (Sec. 5.14.3)
6	VERIFY that the RESPONSE VALUE for essNO.0 is less than or equal to 255.	Pass / Fail (Sec. 5.14.3)
7	VERIFY that the RESPONSE VALUE for essNO.0 is APPROPRIATE.	Pass / Fail (Sec. 5.14.3)

Test Case Results		
Tested By:	***Date Tested:***	***Pass / Fail***
Test Case Notes:		

© 2022 AASHTO / ITE / NEMA

C.2.3.6.4 Retrieve Nitrogen Dioxide Reading

Test Case: 6.4	***Title:***	*Retrieve Nitrogen Dioxide Reading*	
	Description:	*This test case verifies that the ESS allows a management station to retrieve the current nitrogen dioxide reading.*	
	Variables:	*Required_NO2_Sensors*	*(PRL 3.6.16)*
	Pass/Fail Criteria:	*The device under test (DUT) shall pass every verification step included within the Test Case to pass the Test Case.*	

Step	***Test Procedure***	***Device***
1	CONFIGURE: Determine the number of nitrogen dioxide sensors required by the specification (PRL 3.6.16). RECORD this information as: »Required_NO2_Sensors	
2	GET the following object(s): »airQualitySensorTableNumSensors.0	
3	VERIFY that the RESPONSE VALUE for airQualitySensorTableNumSensors.0 is greater than or equal to Required_NO2_Sensors.	Pass / Fail (Sec. 3.6.16)
4	GET the following object(s): »essNO2.0	Pass / Fail (Sec. 3.5.2.3.6.4)
5	VERIFY that the RESPONSE VALUE for essNO2.0 is greater than or equal to 0.	Pass / Fail (Sec. 5.14.4)
6	VERIFY that the RESPONSE VALUE for essNO2.0 is less than or equal to 255.	Pass / Fail (Sec. 5.14.4)
7	VERIFY that the RESPONSE VALUE for essNO2.0 is APPROPRIATE.	Pass / Fail (Sec. 5.14.4)

Test Case Results		
Tested By:	***Date Tested:***	***Pass / Fail***
Test Case Notes:		

© 2022 AASHTO / ITE / NEMA

C.2.3.6.5 Retrieve Sulfur Dioxide Reading

Test Case: 6.5	***Title:***	*Retrieve Sulfur Dioxide Reading*	
	Description:	*This test case verifies that the ESS allows a management station to retrieve the current sulfur dioxide reading.*	
	Variables:	*Required_SO2_Sensors*	*(PRL 3.6.17)*
	Pass/Fail Criteria:	*The device under test (DUT) shall pass every verification step included within the Test Case to pass the Test Case.*	

Step	***Test Procedure***	***Device***
1	CONFIGURE: Determine the number of sulfur dioxide sensors required by the specification (PRL 3.6.17). RECORD this information as: »Required_SO2_Sensors	
2	GET the following object(s): »airQualitySensorTableNumSensors.0	
3	VERIFY that the RESPONSE VALUE for airQualitySensorTableNumSensors.0 is greater than or equal to Required_SO2_Sensors.	Pass / Fail (Sec. 3.6.17)
4	GET the following object(s): »essSO2.0	Pass / Fail (Sec. 3.5.2.3.6.5)
5	VERIFY that the RESPONSE VALUE for essSO2.0 is greater than or equal to 0.	Pass / Fail (Sec. 5.14.5)
6	VERIFY that the RESPONSE VALUE for essSO2.0 is less than or equal to 65535.	Pass / Fail (Sec. 5.14.5)
7	VERIFY that the RESPONSE VALUE for essSO2.0 is APPROPRIATE.	Pass / Fail (Sec. 5.14.5)

Test Case Results		
Tested By:	***Date Tested:***	***Pass / Fail***
Test Case Notes:		

© 2022 AASHTO / ITE / NEMA

C.2.3.6.6 Retrieve Ozone Reading [Versions 01 to 03]

Test Case: 6.6	***Title:***	*Retrieve Ozone Reading [Versions 01 to 03]*	
	Description:	*This test case verifies that the ESS allows a management station to retrieve the current ozone reading.*	
	Variables:	*Required_O3_Sensors*	*(PRL 3.6.18)*
	Pass/Fail Criteria:	*The device under test (DUT) shall pass every verification step included within the Test Case to pass the Test Case.*	

Step	***Test Procedure***	***Device***
1	CONFIGURE: Determine the number of ozone sensors required by the specification (PRL 3.6.18). RECORD this information as: »Required_O3_Sensors	
2	GET the following object(s): »airQualitySensorTableNumSensors.0	
3	VERIFY that the RESPONSE VALUE for airQualitySensorTableNumSensors.0 is greater than or equal to Required_O3_Sensors.	Pass / Fail (Sec. 3.6.18)
4	GET the following object(s): »essO3.0	Pass / Fail (Sec. 3.5.4.41)
5	VERIFY that the RESPONSE VALUE for essO3.0 is greater than or equal to 0.	Pass / Fail (Sec. 5.14.6)
6	VERIFY that the RESPONSE VALUE for essO3.0 is less than or equal to 255.	Pass / Fail (Sec. 5.14.6)
7	VERIFY that the RESPONSE VALUE for essO3.0 is APPROPRIATE.	Pass / Fail (Sec. 5.14.6)

Test Case Results		
Tested By:	***Date Tested:***	***Pass / Fail***
Test Case Notes:		

© 2022 AASHTO / ITE / NEMA

C.2.3.6.7 Retrieve Small Particulate Matter Reading

Test Case: 6.7	***Title:***	*Retrieve Small Particulate Matter Reading*	
	Description:	*This test case verifies that the ESS allows a management station to retrieve the current small particular matter reading.*	
	Variables:	*Required_PM10_Sensors*	*(PRL 3.6.19)*
	Pass/Fail Criteria:	*The device under test (DUT) shall pass every verification step included within the Test Case to pass the Test Case.*	

Step	***Test Procedure***	***Device***
1	CONFIGURE: Determine the number of carbon monoxide sensors required by the specification (PRL 3.6.19). RECORD this information as: »Required_PM10_Sensors	
2	GET the following object(s): »airQualitySensorTableNumSensors.0	
3	VERIFY that the RESPONSE VALUE for airQualitySensorTableNumSensors.0 is greater than or equal to Required_PM10_Sensors.	Pass / Fail (Sec. 3.6.19)
4	GET the following object(s): »essPM10.0	Pass / Fail (Sec. 3.5.2.3.6.7)
5	VERIFY that the RESPONSE VALUE for essPM10.0 is greater than or equal to 0.	Pass / Fail (Sec. 5.14.7)
6	VERIFY that the RESPONSE VALUE for essPM10.0 is less than or equal to 65535.	Pass / Fail (Sec. 5.14.7)
7	VERIFY that the RESPONSE VALUE for essPM10.0 is APPROPRIATE.	Pass / Fail (Sec. 5.14.7)

Test Case Results		
Tested By:	***Date Tested:***	***Pass / Fail***
Test Case Notes:		

© 2022 AASHTO / ITE / NEMA

C.2.3.6.8 Retrieve Compressed Air Quality Data

Test Case: 6.8	***Title:***	*Retrieve Compressed Air Quality Data*	
	Description:	*This test case verifies that the ESS allows a management station to retrieve all of the current air quality data in compressed form.*	
	Variables:	*Support_CO*	*PRL3.6.13*
		Support_CO2	*PRL 3.6.14*
		Support_NO	*PRL 3.6.15*
		Support_NO2	*PRL 3.6.16*
		Support_SO2	*PRL 3.6.17*
		Support_O3	*PRL 3.6.18*
		Support_PM10	*PRL 3.6.19*
	Pass/Fail Criteria:	*The device under test (DUT) shall pass every verification step included within the Test Case to pass the Test Case.*	

Step	***Test Procedure***	***Device***
1	CONFIGURE: Determine whether the device is required to support a carbon monoxide sensor (PRL3.6.13). RECORD this information as: »Support_CO	
2	CONFIGURE: Determine whether the device is required to support a carbon dioxide sensor (PRL 3.6.14). RECORD this information as: »Support_CO2	
3	CONFIGURE: Determine whether the device is required to support a nitric oxide sensor (PRL 3.6.15). RECORD this information as: »Support_NO	
4	CONFIGURE: Determine whether the device is required to support a nitrogen dioxide sensor (PRL 3.6.16). RECORD this information as: »Support_NO2	
5	CONFIGURE: Determine whether the device is required to support a sulfur dioxide sensor (PRL 3.6.17). RECORD this information as: »Support_SO2	
6	CONFIGURE: Determine whether the device is required to support a ozone sensor (PRL 3.6.18). RECORD this information as: »Support_O3	
7	CONFIGURE: Determine whether the device is required to support a particulate matter sensor (PRL 3.6.19). RECORD this information as: »Support_PM10	
8	GET the following object(s): »essAirQualityBlock.0	Pass / Fail (Sec. 3.5.2.3.6.8)
9	Decode the essAirQualityBlock.0 structure.	
10	VERIFY that the essAirQualityBlock.0 structure was decoded without error.	Pass / Fail (Sec. 5.14.8)
11	IF Support_CO is equal to true, then proceed to Step 11.1; otherwise, proceed to Step 12.	
11.1	VERIFY that the RESPONSE VALUE for the essCO.0 field of the essAirQualityData field is present.	Pass / Fail (Sec. 3.5.2.3.6.1)

Copy Per TRF Distribution Permission © 2022 AASHTO / ITE / NEMA

11.2	VERIFY that the RESPONSE VALUE for essCO.0 is between 0 and 255, inclusive.	Pass / Fail (Sec. 5.14.1)
11.3	VERIFY that the RESPONSE VALUE for essCO.0 is APPROPRIATE.	Pass / Fail (Sec. 5.14.1)
12	IF Support_CO2 is equal to true, then proceed to Step 12.1; otherwise, proceed to Step 13.	
12.1	VERIFY that the RESPONSE VALUE for the essCO2.0 field of the essAirQualityData field is present.	Pass / Fail (Sec. 3.5.2.3.6.2)
12.2	VERIFY that the RESPONSE VALUE for essCO2.0 is between 0 and 65535, inclusive.	Pass / Fail (Sec. 5.14.2)
12.3	VERIFY that the RESPONSE VALUE for essCO2.0 is APPROPRIATE.	Pass / Fail (Sec. 5.14.2)
13	IF Support_NO is equal to true, then proceed to Step 13.1; otherwise, proceed to Step 14.	
13.1	VERIFY that the RESPONSE VALUE for the essNO.0 field of the essAirQualityData field is present.	Pass / Fail (Sec. 3.5.2.3.6.3)
13.2	VERIFY that the RESPONSE VALUE for essNO.0 is between 0 and 255, inclusive.	Pass / Fail (Sec. 5.14.3)
13.3	VERIFY that the RESPONSE VALUE for essNO.0 is APPROPRIATE.	Pass / Fail (Sec. 5.14.3)
14	IF Support_NO2 is equal to true, then proceed to Step 14.1; otherwise, proceed to Step 15.	
14.1	VERIFY that the RESPONSE VALUE for the essNO2.0 field of the essAirQualityData field is present.	Pass / Fail (Sec. 3.5.2.3.6.4)
14.2	VERIFY that the RESPONSE VALUE for essNO2.0 is between 0 and 255, inclusive.	Pass / Fail (Sec. 5.14.4)
14.3	VERIFY that the RESPONSE VALUE for essNO2.0 is APPROPRIATE.	Pass / Fail (Sec. 5.14.4)
15	IF Support_SO2 is equal to true, then proceed to Step 15.1; otherwise, proceed to Step 16.	
15.1	VERIFY that the RESPONSE VALUE for the essSO2.0 field of the essAirQualityData field is present.	Pass / Fail (Sec. 3.5.2.3.6.5)
15.2	VERIFY that the RESPONSE VALUE for essSO2.0 is between 0 and 65535, inclusive.	Pass / Fail (Sec. 5.14.5)
15.3	VERIFY that the RESPONSE VALUE for essSO2.0 is APPROPRIATE.	Pass / Fail (Sec. 5.14.5)
16	IF Support_O3 is equal to true, then proceed to Step 16.1; otherwise, proceed to Step 17.	
16.1	VERIFY that the RESPONSE VALUE for the essO3.0 field of the essAirQualityData field is present.	Pass / Fail (Sec. 3.5.2.3.6.6)
16.2	VERIFY that the RESPONSE VALUE for essO3.0 is between 0 and 255, inclusive.	Pass / Fail (Sec. 5.14.6)

© 2022 AASHTO / ITE / NEMA Copy Per TRF Distribution Permission

16.3	VERIFY that the RESPONSE VALUE for essO3.0 is APPROPRIATE.	Pass / Fail (Sec. 5.14.6)
17	IF Support_PM10 is equal to true, then proceed to Step 17.1; otherwise, proceed to EXIT.	
17.1	VERIFY that the RESPONSE VALUE for the essPM10.0 field of the essAirQualityData field is present.	Pass / Fail (Sec. 3.5.2.3.6.7)
17.2	VERIFY that the RESPONSE VALUE for essPM10.0 is between 0 and 65535, inclusive.	Pass / Fail (Sec. 5.14.7)
17.3	VERIFY that the RESPONSE VALUE for essPM10.0 is APPROPRIATE.	Pass / Fail (Sec. 5.14.7)

Test Case Results		
Tested By:	***Date Tested:***	***Pass / Fail***
Test Case Notes:		

© 2022 AASHTO / ITE / NEMA

C.2.3.6.9 Retrieve Particulate Matter (2.5) Reading

Test Case: 6.9	***Title:***	*Retrieve Particulate Matter (2.5) Reading for Each Air Quality Sensor*	
	Description:	*This test case verifies that the ESS allows a management station to retrieve the particulate matter (2.5) reading of each air quality sensor.*	
	Variables:	*Supported_PM25_Sensors*	*(PRL 3.6.28)*
	Pass/Fail Criteria:	*The device under test (DUT) shall pass every verification step included within the Test Case in order to pass the Test Case.*	

Step	***Test Procedure***	***Device***
1	CONFIGURE: Determine the number of small particular matter (less than 2.5 micron diameter) sensors required by the specification (PRL 3.6.28). RECORD this information as: »Required_PM25_Sensors	
2	GET the following object(s): »airQualitySensorTableNumSensors.0	
3	VERIFY that the RESPONSE VALUE for airQualitySensorTableNumSensors.0 is greater than or equal to Required_PM25_Sensors.	Pass / Fail (Sec. 3.6.28)
4	GET the following object(s): »essPM25.0	Pass / Fail (Sec. 3.5.2.3.6.7)
5	VERIFY that the RESPONSE VALUE for essPM25.0 is greater than or equal to 0.	Pass / Fail (Sec. 5.14.9)
6	VERIFY that the RESPONSE VALUE for essPM25.0 is less than or equal to 65535.	Pass / Fail (Sec. 5.14.9)
7	VERIFY that the RESPONSE VALUE for essPM25.0 is APPROPRIATE.	Pass / Fail (Sec. 5.14.9)

Test Case Results		
Tested By:	***Date Tested:***	***Pass / Fail***
Test Case Notes:		

© 2022 AASHTO / ITE / NEMA

C.2.3.6.10 Retrieve Carbon Dioxide Reading - Version 4

Test Case: 6.2	***Title:***	*Retrieve Carbon Dioxide Reading - Version 4*	
	Description:	*This test case verifies that the ESS allows a management station to retrieve the current carbon dioxide reading.*	
	Variables:	*Required_CO2_Sensors*	*(PRL 3.6.14)*
	Pass/Fail Criteria:	*The device under test (DUT) shall pass every verification step included within the Test Case to pass the Test Case.*	

Step	***Test Procedure***	***Device***
1	CONFIGURE: Determine the number of carbon dioxide sensors required by the specification (PRL 3.6.14). RECORD this information as: »Required_CO2_Sensors	
2	GET the following object(s): »airQualitySensorTableNumSensors.0	
3	VERIFY that the RESPONSE VALUE for airQualitySensorTableNumSensors.0 is greater than or equal to Required_CO2_Sensors.	Pass / Fail (Sec. 3.6.14)
4	GET the following object(s): »essCO2V4.0	Pass / Fail (Sec. 3.5.2.3.6.10)
5	VERIFY that the RESPONSE VALUE for essCO2V4.0 is greater than or equal to 0.	Pass / Fail (Sec. 5.14.13)
6	VERIFY that the RESPONSE VALUE for essCO2V4.0 is less than or equal to 65535.	Pass / Fail (Sec. 5.14.13)
7	VERIFY that the RESPONSE VALUE for essCO2V4.0 is APPROPRIATE.	Pass / Fail (Sec. 5.14.13)

Test Case Results		
Tested By:	***Date Tested:***	***Pass / Fail***
Test Case Notes:		

© 2022 AASHTO / ITE / NEMA

C.2.3.6.11 Retrieve Nitric Oxide Reading - Version 4

Test Case: 6.3	***Title:***	*Retrieve Nitric Oxide Reading - Version 4*	
	Description:	*This test case verifies that the ESS allows a management station to retrieve the current nitric oxide reading.*	
	Variables:	*Required_NO_Sensors*	*(PRL 3.6.15)*
	Pass/Fail Criteria:	*The device under test (DUT) shall pass every verification step included within the Test Case to pass the Test Case.*	

Step	***Test Procedure***	***Device***
1	CONFIGURE: Determine the number of nitric oxide sensors required by the specification (PRL 3.6.15). RECORD this information as: »Required_NO_Sensors	
2	GET the following object(s): »airQualitySensorTableNumSensors.0	
3	VERIFY that the RESPONSE VALUE for airQualitySensorTableNumSensors.0 is greater than or equal to Required_NO_Sensors.	Pass / Fail (Sec. 3.6.15)
4	GET the following object(s): »essNOV4.0	Pass / Fail (Sec. 3.5.2.3.6.11)
5	VERIFY that the RESPONSE VALUE for essNOV4.0 is greater than or equal to 0.	Pass / Fail (Sec. 5.14.14)
6	VERIFY that the RESPONSE VALUE for essNOV4.0 is less than or equal to 255.	Pass / Fail (Sec. 5.14.14)
7	VERIFY that the RESPONSE VALUE for essNOV4.0 is APPROPRIATE.	Pass / Fail (Sec. 5.14.14)

Test Case Results		
Tested By:	***Date Tested:***	***Pass / Fail***
Test Case Notes:		

© 2022 AASHTO / ITE / NEMA

C.2.3.6.12 Retrieve Ozone Reading - Version 4

Test Case: 6.6	***Title:***	*Retrieve Ozone Reading - Version 4*	
	Description:	*This test case verifies that the ESS allows a management station to retrieve the current ozone reading.*	
	Variables:	*Required_O3_Sensors*	*(PRL 3.6.18)*
	Pass/Fail Criteria:	*The device under test (DUT) shall pass every verification step included within the Test Case to pass the Test Case.*	

Step	***Test Procedure***	***Device***
1	CONFIGURE: Determine the number of ozone sensors required by the specification (PRL 3.6.18). RECORD this information as: »Required_O3_Sensors	
2	GET the following object(s): »airQualitySensorTableNumSensors.0	
3	VERIFY that the RESPONSE VALUE for airQualitySensorTableNumSensors.0 is greater than or equal to Required_O3_Sensors.	Pass / Fail (Sec. 3.6.18)
4	GET the following object(s): »essO3V4.0	Pass / Fail (Sec. 3.5.2.3.6.12)
5	VERIFY that the RESPONSE VALUE for essO3V4.0 is greater than or equal to 0.	Pass / Fail (Sec. 5.14.15)
6	VERIFY that the RESPONSE VALUE for essO3V4.0 is less than or equal to 65535.	Pass / Fail (Sec. 5.14.15)
7	VERIFY that the RESPONSE VALUE for essO3V4.0 is APPROPRIATE.	Pass / Fail (Sec. 5.14.15)

Test Case Results		
Tested By:	***Date Tested:***	***Pass / Fail***
Test Case Notes:		

© 2022 AASHTO / ITE / NEMA

C.2.3.7 Water Level and Snapshot Tests

C.2.3.7.1 Retrieve Water Level

Test Case: 7.1	***Title:***	*Retrieve Water Level*	
	Description:	*This test case verifies that the ESS allows a management station to retrieve the current depth of water at defined locations.*	
	Variables:	*Required_Sensors*	*PRL 3.6.22*
	Pass/Fail Criteria:	*The device under test (DUT) shall pass every verification step included within the Test Case to pass the Test Case.*	

Step	***Test Procedure***	***Device***
1	CONFIGURE: Determine the number of water level sensors required by the specification (PRL 3.6.22). RECORD this information as: »Required_Sensors	
2	GET the following object(s): »waterLevelSensorTableNumSensors.0	Pass / Fail (Sec. 3.5.2.3.7)
3	VERIFY that the RESPONSE VALUE for waterLevelSensorTableNumSensors.0 is greater than or equal to Required_Sensors.	Pass / Fail (Sec. 3.6.22)
4	Determine the RESPONSE VALUE for waterLevelSensorTableNumSensors.0. RECORD this information as: »Supported_Sensors	
5	FOR EACH value, N, from 1 to Supported_Sensors, perform Steps 5.1 through 5.4.	
5.1	GET the following object(s): »waterLevelSensorReading.N	Pass / Fail (Sec. 3.5.2.3.7)
5.2	VERIFY that the RESPONSE VALUE for waterLevelSensorReading.N is greater than or equal to 0.	Pass / Fail (Sec. 5.8.21.2)
5.3	VERIFY that the RESPONSE VALUE for waterLevelSensorReading.N is less than or equal to 65535.	Pass / Fail (Sec. 5.8.21.2)
5.4	VERIFY that the RESPONSE VALUE for waterLevelSensorReading.N is APPROPRIATE.	Pass / Fail (Sec. 5.8.21.2)

Test Case Results		
Tested By:	***Date Tested:***	***Pass / Fail***
Test Case Notes:		

© 2022 AASHTO / ITE / NEMA

C.2.3.7.2 Retrieve Snapshot

Test Case: 7.2	***Title:***	*Retrieve Snapshot*	
	Description:	*This test case verifies that the ESS allows a management station to retrieve a specified snapshot image.*	
	Variables:	*Required_Cameras*	*PRL 3.6.20*
		FTP_Username	*3.5.2.3.8*
		FTP_Password	*PRL 3.5.2.3.8*
	Pass/Fail Criteria:	*The device under test (DUT) shall pass every verification step included within the Test Case to pass the Test Case.*	

Step	***Test Procedure***	***Device***
1	PRE-CONDITION: The controller shall have at least one image stored.	
2	CONFIGURE: Determine the number of snapshot cameras required by the specification (PRL 3.6.20). RECORD this information as: »Required_Cameras	
3	CONFIGURE: Determine the user name and password for the FTP connection. RECORD this information as: »FTP_Username (the FTP username as defined in Sec. 3.5.2.3.8) »FTP_Password (the FTP password as defined—PRL 3.5.2.3.8)	
4	GET the following object(s): »essSnapshotNumberOfCameras.0	Pass / Fail (Sec. 4.2.11)
5	VERIFY that the RESPONSE VALUE for essSnapshotNumberOfCameras.0 is greater than or equal to Required_Cameras.	Pass / Fail (Sec. 3.6.20)
6	Determine a random number between 1 and Required_Cameras. RECORD this information as: »Subject_Camera	
7	FOR EACH value, N, from 1 to Required_Cameras, perform Steps 7.1 through 7.2.	
7.1	GET the following object(s): »essSnapshotCameraDescription.N »essSnapshotCameraStoragePath.N	Pass / Fail (Sec. 4.2.11)
7.2	IF N is equal to Subject_Camera, then proceed to Step 7.3.1; otherwise, proceed to Step 8.	
7.2.1	Determine the RESPONSE VALUE for essSnapshotCameraStoragePath.N. RECORD this information as: »Subject_Directory	
8	FOR EACH value, N, from 1 to Required_Cameras, perform Steps 8.1.	
8.1	GET the following object(s): »essSnapshotCameraFilename.N	Pass / Fail (Sec. 4.2.11)
9	Create an FTP connection to the Subject_Directory directory using FTP_Username as the username and FTP_Password as the password.	Pass / Fail (Sec. 4.2.2)
10	List all of the files in the following directory: Subject_Directory.	Pass / Fail (Sec. 4.2.2)

Copy Per TRF Distribution Permission © 2022 AASHTO / ITE / NEMA

11	Calculate the file specification for the image files in the subject directory (e.g., Subject_Directory + '*.jpg'). RECORD this information as: »Delete_File_Spec	
12	Delete Delete_File_Spec using FTP.	Pass / Fail (Sec. 4.2.3)
13	List all of the files in the following directory: Subject_Directory. VERIFY that there are 0 files following the file format: ''*.jpg''.	Pass / Fail (Sec. 4.2.3)
14	SET the following object(s) to the value(s) shown: »essSnapshotCameraCommand.Subject_Camera = 'captureSnapshot' VERIFY that there is no response.	Pass / Fail (Sec. 4.2.1)
14.1	GET the following object(s): »essSnapshotCameraCommand.Subject_Camera	Pass / Fail (Sec. 4.2.1)
14	IF the RESPONSE VALUE for essSnapshotCameraCommand.Subject_Camera is equal to 'captureSnapshot', then proceed to Step 14.1; otherwise, proceed to Step 15.	
15	GET the following object(s): »essSnapshotCameraError.Subject_Camera	Pass / Fail (Sec. 4.2.1)
16	VERIFY that the RESPONSE VALUE for essSnapshotCameraError.Subject_Camera is equal to 'none'.	Pass / Fail (Sec. 4.2.1)
17	List all of the files in the following directory: Subject_Directory.	Pass / Fail (Sec. 4.2.2)
18	Determine the name of the image file in the directory. RECORD this information as: »Subject_File_Name	
19	Retrieve Subject_File_Name using FTP.	Pass / Fail (Sec. 4.2.2)
20	Delete Subject_File_Name using FTP.	Pass / Fail (Sec. 4.2.3)
21	POST-CONDITION: All image files previously stored on the device have been deleted from the Subject_Camera's directory.	

Test Case Results		
Tested By:	***Date Tested:***	***Pass / Fail***
Test Case Notes:		

© 2022 AASHTO / ITE / NEMA

C.2.3.8 Pavement Treatment Tests

C.2.3.8.1 Retrieve Stationary Pavement Treatment Configuration

Test Case: 8.1	***Title:***	*Retrieve Stationary Pavement Treatment Configuration*
	Description:	*This test case verifies that the ESS allows a management station to retrieve the current pavement treatment configuration for a stationary device.*
	Variables:	*Required_Treatments* — *PRL 3.6.12*
	Pass/Fail Criteria:	*The device under test (DUT) shall pass every verification step included within the Test Case to pass the Test Case.*

Step	***Test Procedure***	***Device***
1	CONFIGURE: Determine the number of treatments that the specification requires the device to support (PRL 3.6.12). RECORD this information as: »Required_Treatments	
2	GET the following object(s): »numEssTreatments.0	Pass / Fail (Sec. 4.2.5)
3	VERIFY that the RESPONSE VALUE for numEssTreatments.0 is greater than or equal to Required_Treatments.	Pass / Fail (Sec. 3.6.12)
4	Determine the RESPONSE VALUE for numEssTreatments.0. RECORD this information as: »Num_Treatments	
5	Determine the initial percentage to be equal to 0. RECORD this information as: »Total_Percent	
6	FOR EACH value, N, from 1 to Num_Treatments, perform Steps 6.1 through 6.12.	
6.1	GET the following object(s): »essPaveTreatProductType.N »essPaveTreatProductForm.N »essPercentProductMix.N	Pass / Fail (Sec. 4.2.5)
6.2	VERIFY that the RESPONSE VALUE for essPaveTreatProductType.N is greater than or equal to 1.	Pass / Fail (Sec. 5.13.3.2)
6.3	VERIFY that the RESPONSE VALUE for essPaveTreatProductType.N is less than or equal to 14.	Pass / Fail (Sec. 5.13.3.2)
6.4	VERIFY that the RESPONSE VALUE for essPaveTreatProductType.N is APPROPRIATE.	Pass / Fail (Sec. 5.13.3.2)
6.5	VERIFY that the RESPONSE VALUE for essPaveTreatProductForm.N is greater than or equal to 1.	Pass / Fail (Sec. 5.13.3.3)
6.6	VERIFY that the RESPONSE VALUE for essPaveTreatProductForm.N is less than or equal to 4.	Pass / Fail (Sec. 5.13.3.3)
6.7	VERIFY that the RESPONSE VALUE for essPaveTreatProductForm.N is APPROPRIATE.	Pass / Fail (Sec. 5.13.3.3)
6.8	VERIFY that the RESPONSE VALUE for essPercentProductMix.N is greater than or equal to 0.	Pass / Fail (Sec. 5.13.3.4)
6.9	VERIFY that the RESPONSE VALUE for essPercentProductMix.N is less than or equal to 100.	Pass / Fail (Sec. 5.13.3.4)

Copy Per TRF Distribution Permission © 2022 AASHTO / ITE / NEMA

6.10	VERIFY that the RESPONSE VALUE for essPercentProductMix.N is APPROPRIATE.	Pass / Fail (Sec. 5.13.3.4)
6.11	Determine the RESPONSE VALUE for essPercentProductMix.N. RECORD this information as: »Current_Percentage	
6.12	Determine the total of Total_Percentage and Current_Percentage. RECORD this information as: »Total_Percentage	
7	VERIFY that Total_Percentage is greater than or equal to 99.	PASS / Fail (Sec. 5.1.3.3.4)
8	VERIFY that Total_Percentage is less than or equal to 101.	Pass / Fail (Sec. 5.13.3.4)
9	GET the following object(s): »ptsSignalDuration.0 »ptsMonitoringDetectors.0	Pass / Fail (Sec. 4.2.5)
10	VERIFY that the RESPONSE VALUE for ptsSignalDuration.0 is greater than or equal to 0.	Pass / Fail (Sec. 5.13.10)
11	VERIFY that the RESPONSE VALUE for ptsSignalDuration.0 is less than or equal to 3600000.	Pass / Fail (Sec. 5.13.10)
12	VERIFY that the RESPONSE VALUE for ptsSignalDuration.0 is APPROPRIATE.	Pass / Fail (Sec. 5.13.10)
13	VERIFY that ptsMonitoringDetectors.0 is a 4-byte value.	Pass / Fail (Sec. 5.13.18)
14	VERIFY that the RESPONSE VALUE for ptsMonitoringDetectors.0 is APPROPRIATE.	Pass / Fail (Sec. 5.13.18)

Test Case Results		
Tested By:	***Date Tested:***	***Pass / Fail***
Test Case Notes:		

© 2022 AASHTO / ITE / NEMA

C.2.3.8.2 Configure Stationary Pavement Treatment System

Test Case: 8.2	***Title:***	*Configure Stationary Pavement Treatment System*	
	Description:	*This test case verifies that the ESS allows a management station to configure the pavement treatment configuration for a stationary system.*	
	Variables:	*Required_Treatments*	*PRL 3.6.12*
		Selected_Detectors	
		Duration	
	Pass/Fail Criteria:	*The device under test (DUT) shall pass every verification step included within the Test Case to pass the Test Case.*	

Step	***Test Procedure***	***Device***
1	CONFIGURE: Determine the number of treatments that the ESS is required to support per the specification (PRL 3.6.12). RECORD this information as: »Required_Treatments	
2	CONFIGURE: Determine An octet string representing the detector numbers that should be used to control the PTS. RECORD this information as: »Selected_Detectors	
3	CONFIGURE: Determine the duration for which the device should signal the PTS unit. RECORD this information as: »Duration	
4	GET the following object(s): »numEssTreatments.0	Pass / Fail (Sec. 4.2.7)
5	VERIFY that the RESPONSE VALUE for numEssTreatments.0 is greater than or equal to Required_Treatments.	Pass / Fail (Sec. 3.6.12)
6	Determine the RESPONSE VALUE for numEssTreatments.0. RECORD this information as: »Num_Treatments	
7	FOR EACH value, N, from 1 to Num_Treatments, perform Steps 7.1 through 7.4.	
7.1	Determine values to test for product type and form. RECORD this information as: »Product_Type (a random number between 2 and 14) »Product_Form (a random number between 2 and 4)	
7.2	SET-UP: GET the following object(s): »essPaveTreatProductType.N »essPaveTreatProductForm.N	
7.3	Determine the retrieved values. RECORD this information as: »Orig_Type[N] »Orig_Form[N]	
7.4	SET the following object(s) to the value(s) shown: »essPaveTreatProductType.N = Product_Type »essPaveTreatProductForm.N = Product_Form	Pass / Fail (Sec. 4.2.7)
8	Determine the initial percentage available to be one hundred (100). RECORD this information as: »Percentage_Available	
9	FOR EACH value, N, from 1 to Num_Treatments, perform Steps 9.1 through 9.5.	

Copy Per TRF Distribution Permission © 2022 AASHTO / ITE / NEMA

9.1	IF N is equal to Num_Treatments, then proceed to Step 9.1.1; otherwise, proceed to Step 9.2.1.	
9.1.1	Determine the value stored in Percentage_Available. RECORD this information as: »Current_Percentage GO TO Step 9.3.	
9.2.1	Determine a random number between 0 and Percentage_Available. RECORD this information as: »Current_Percentage	
9.2.2	Determine the value defined by Percentage_Available minus the Current_Percentage. RECORD this information as: »Percentage_Available	
9.3	SET-UP: GET the following object(s): »essPercentProductMix.N	
9.4	Determine the RESPONSE VALUE for essPercentProductMix.N. RECORD this information as: »Orig_Mix[N]	
9.5	SET the following object(s) to the value(s) shown: »essPercentProductMix.N = Current_Percentage	Pass / Fail (Sec. 4.2.7)
10	SET-UP: GET the following object(s): »ptsSignalDuration.0 »ptsMonitoringDetectors.0	
11	Determine the retrieved values. RECORD this information as: »Orig_Duration »Orig_Detectors	
12	SET the following object(s) to the value(s) shown: »ptsSignalDuration.0 = Duration »ptsMonitoringDetectors.0 = Selected_Detectors	Pass / Fail (Sec. 4.2.7)
13	FOR EACH value, N, from 1 to Num_Treatments, perform Step 13.1.	
13.1	SET the following object(s) to the value(s) shown: »essPaveTreatProductType.N = Orig_Type[N] »essPaveTreatProductForm.N = Orig_Form[N]	Pass / Fail (RFC 1157)
14	FOR EACH value, N, from 1 to Num_Treatments, perform Step 14.1.	
14.1	SET the following object(s) to the value(s) shown: »essPercentProductMix.N = Orig_Percentage[N]	Pass / Fail (RFC 1157)
15	SET the following object(s) to the value(s) shown: »ptsSignalDuration.0 = Orig_Duration »ptsMonitoringDetectors.0 = Orig_Detectors	Pass / Fail (RFC 1157)

Test Case Results

Tested By:	***Date Tested:***	***Pass / Fail***

Test Case Notes:

© 2022 AASHTO / ITE / NEMA

C.2.3.8.3 Retrieve Mobile Pavement Treatment Configuration

Test Case: 8.3	***Title:***	*Retrieve Mobile Pavement Treatment Configuration*	
	Description:	*This test case verifies that the ESS allows a management station to retrieve the current pavement treatment configuration for a mobile platform.*	
	Variables:	*Required_Treatments*	*PRL 3.6.12*
	Pass/Fail Criteria:	*The device under test (DUT) shall pass every verification step included within the Test Case to pass the Test Case.*	

Step	***Test Procedure***	***Device***
1	CONFIGURE: Determine the number of treatments that the specification requires the device to support (PRL 3.6.12). RECORD this information as: »Required_Treatments	
2	GET the following object(s): »numEssTreatments.0	Pass / Fail (RFC 1157)
3	VERIFY that the RESPONSE VALUE for numEssTreatments.0 is greater than or equal to Required_Treatments.	Pass / Fail (Sec. 3.6.12)
4	Determine the RESPONSE VALUE for numEssTreatments.0. RECORD this information as: »Num_Treatments	
5	GET the following object(s): »pavementTreatmentBlock.0	Pass / Fail (Sec. 3.5.3.1.3)
6	Decode the pavementTreatmentBlock.0 structure.	
7	VERIFY that the RESPONSE VALUE for the treatmentInfo field of the pavementTreatmentBlock.0 object is present.	Pass / Fail (Sec. 5.13.6)
8	VERIFY that the treatmentInfo field of the pavementTreatmentBlock.0 object contains Num_Treatments entries.	Pass / Fail (Sec. 3.6.12)
9	FOR EACH value, N, from 1 to Num_Treatments, perform Steps 9.1 through 9.11.	
9.1	VERIFY that the RESPONSE VALUE for the essPavementTreatmentIndex.x field of the treatmentInfo field is present.	Pass / Fail (Sec. 5.13.6)
9.2	VERIFY that the essPavementTreatmentIndex.x field is equal to N.	Pass / Fail (Sec. 5.13.6)
9.3	VERIFY that the RESPONSE VALUE for the essPaveTreatProductType.x field of the treatmentInfo field is present.	Pass / Fail (Sec. 5.13.6)
9.4	VERIFY that the essPaveTreatProductType.x field is between 1 and 14.	Pass / Fail (Sec. 5.13.3.2)
9.5	VERIFY that the RESPONSE VALUE for essPaveTreatProductType.x is APPROPRIATE.	Pass / Fail (Sec. 5.13.3.2)
9.6	VERIFY that the RESPONSE VALUE for the essPaveTreatProductForm.x field of the treatmentInfo field is present.	Pass / Fail (Sec. 5.13.6)
9.7	VERIFY that the essPaveTreatProductForm.x field is between 1 and 4.	Pass / Fail (Sec. 5.13.3.3)

Copy Per TRF Distribution Permission © 2022 AASHTO / ITE / NEMA

9.8	VERIFY that the RESPONSE VALUE for essPaveTreatProductForm.x is APPROPRIATE.	Pass / Fail (Sec. 5.13.3.3)
9.9	VERIFY that the RESPONSE VALUE for the essPercentProductMix.x field of the treatmentInfo field is present.	Pass / Fail (Sec. 5.13.6)
9.10	VERIFY that the essPercentProductMix.x field is between 0 and 100.	Pass / Fail (Sec. 5.13.3.4)
9.11	VERIFY that the RESPONSE VALUE for essPercentProductMix.x is APPROPRIATE.	Pass / Fail (Sec. 5.13.3.4)
10	VERIFY that the RESPONSE VALUE for the essPaveTreatmentAmount.0 field of the pavementTreatmentBlock.0 object is present.	Pass / Fail (Sec. 5.13.6)
11	VERIFY that the essPaveTreatmentAmount.0 field is between 0 and 255.	Pass / Fail (Sec. 5.13.4)
12	VERIFY that the RESPONSE VALUE for essPaveTreatmentAmount.0 is APPROPRIATE.	Pass / Fail (Sec. 5.13.4)
13	VERIFY that the RESPONSE VALUE for the essPaveTreatmentWidth.0 field of the pavementTreatmentBlock.0 object is present.	Pass / Fail (Sec. 5.13.6)
14	VERIFY that the essPaveTreatmentWidth.0 field is between 0 and 255.	Pass / Fail (Sec. 5.13.5)
15	VERIFY that the RESPONSE VALUE for essPaveTreatmentWidth.0 is APPROPRIATE.	Pass / Fail (Sec. 5.13.5)

Test Case Results		
Tested By:	***Date Tested:***	***Pass / Fail***
Test Case Notes:		

© 2022 AASHTO / ITE / NEMA

C.2.3.8.4 Configure Mobile Pavement Treatment System

Test Case: 8.4	***Title:***	*Configure Mobile Pavement Treatment System*
	Description:	*This test case verifies that the ESS allows a management station to configure the pavement treatment configuration for a mobile system.*
	Variables:	*Required_Treatments* *Selected_Detectors*
	Pass/Fail Criteria:	*The device under test (DUT) shall pass every verification step included within the Test Case to pass the Test Case.*

Step	***Test Procedure***	***Device***
1	CONFIGURE: Determine the number of treatments that the ESS is required to support per the specification (). RECORD this information as: »Required_Treatments	
2	CONFIGURE: Determine the detector numbers that should be used to control the PTS. RECORD this information as: »Selected_Detectors	
3	GET the following object(s): »numEssTreatments.0	Pass / Fail (Sec. 4.2.9)
4	VERIFY that the RESPONSE VALUE for numEssTreatments.0 is greater than or equal to Required_Treatments.	Pass / Fail (Sec. 3.6.12)
5	Determine the RESPONSE VALUE for numEssTreatments.0. RECORD this information as: »Num_Treatments	
6	FOR EACH value, N, from 1 to Num_Treatments, perform Steps 6.1 through 6.2.	
6.1	Determine the product type and form to use in the test. RECORD this information as: »Product_Type (a random number between 2 and 14) »Product_Form (a random number between 2 and 4)	
6.2	SET the following object(s) to the value(s) shown: »essPaveTreatProductType.N = Product_Type »essPaveTreatProductForm.N = Product_Form	Pass / Fail (Sec. 4.2.9)
7	Determine the initial percentage available to be one hundred (100). RECORD this information as: »Percentage_Available	
8	FOR EACH value, N, from 1 to Num_Treatments, perform Steps 8.1 through 8.3.	
8.1	IF N is equal to Num_Treatments, then proceed to Step 8.1.1; otherwise, proceed to Step 8.2.1.	
8.1.1	Determine the value stored in Percentage_Available. RECORD this information as: »Current_Percentage GO TO Step 8.3.	
8.2.1	Determine a random number between 0 and Percentage_Available. RECORD this information as: »Current_Percentage	
8.2.2	Determine the value defined by Percentage_Available minus the Current_Percentage. RECORD this information as: »Percentage_Available	

Copy Per TRF Distribution Permission © 2022 AASHTO / ITE / NEMA

8.3	SET the following object(s) to the value(s) shown: »essPercentProductMix.N = Current_Percentage	Pass / Fail (Sec. 4.2.9)
9	Determine test values for the amount and width. RECORD this information as: »Amount (a random amount of chemical to be sprayed between 0 and 255) »Width (a random width to spray between 0 and 255)	
10	SET the following object(s) to the value(s) shown: »essPaveTreatmentAmount.0 = Amount »essPaveTreatmentWidth.0 = Width	Pass / Fail (Sec. 4.2.9)

Test Case Results		
Tested By:	***Date Tested:***	***Pass / Fail***
Test Case Notes:		

© 2022 AASHTO / ITE / NEMA

C.2.3.8.5 Retrieve Pavement Treatment Status

Test Case: 8.5	***Title:***	*Retrieve Pavement Treatment Status*
	Description:	*This test case verifies that the ESS allows a management station to retrieve the status of the pavement treatment system.*
	Variables:	
	Pass/Fail Criteria:	*The device under test (DUT) shall pass every verification step included within the Test Case to pass the Test Case.*

Step	***Test Procedure***	***Device***
1	GET the following object(s): »ptsSprayerState.0 »ptsSignalEventCount.0 »ptsLastSignalEvent.0 »ptsActiveEventCount.0 »ptsInactiveEventCount.0 »ptsLastActiveEvent.0 »ptsLastInactiveEvent.0 »ptsError.0	Pass / Fail (Sec. 3.5.3.2.1)
2	VERIFY that the RESPONSE VALUE for ptsSprayerState.0 is greater than or equal to 1.	Pass / Fail (Sec. 5.13.9)
3	VERIFY that the RESPONSE VALUE for ptsSprayerState.0 is less than or equal to 3.	Pass / Fail (Sec. 5.13.9)
4	VERIFY that the RESPONSE VALUE for ptsSprayerState.0 is APPROPRIATE.	Pass / Fail (Sec. 5.13.9)
5	VERIFY that the RESPONSE VALUE for ptsSignalEventCount.0 is greater than or equal to 0.	Pass / Fail (Sec. 5.13.11)
6	VERIFY that the RESPONSE VALUE for ptsSignalEventCount.0 is less than or equal to 4294967295.	Pass / Fail (Sec. 5.13.11)
7	VERIFY that the RESPONSE VALUE for ptsSignalEventCount.0 is APPROPRIATE.	Pass / Fail (Sec. 5.13.11)
8	VERIFY that the RESPONSE VALUE for ptsLastSignalEvent.0 is greater than or equal to 0.	Pass / Fail (Sec. 5.13.12)
9	VERIFY that the RESPONSE VALUE for ptsLastSignalEvent.0 is less than or equal to 4294967295.	Pass / Fail (Sec. 5.13.12)
10	VERIFY that the RESPONSE VALUE for ptsLastSignalEvent.0 is APPROPRIATE.	Pass / Fail (Sec. 5.13.12)
11	VERIFY that the RESPONSE VALUE for ptsActiveEventCount.0 is greater than or equal to 0.	Pass / Fail (Sec. 5.13.13)
12	VERIFY that the RESPONSE VALUE for ptsActiveEventCount.0 is less than or equal to 4294967295.	Pass / Fail (Sec. 5.13.13)
13	VERIFY that the RESPONSE VALUE for ptsActiveEventCount.0 is APPROPRIATE.	Pass / Fail (Sec. 5.13.13)
14	VERIFY that the RESPONSE VALUE for ptsInactiveEventCount.0 is greater than or equal to 0.	Pass / Fail (Sec. 5.13.14)

Copy Per TRF Distribution Permission © 2022 AASHTO / ITE / NEMA

15	VERIFY that the RESPONSE VALUE for ptsInactiveEventCount.0 is less than or equal to 4294967295.	Pass / Fail (Sec. 5.13.14)
16	VERIFY that the RESPONSE VALUE for ptsInactiveEventCount.0 is APPROPRIATE.	Pass / Fail (Sec. 5.13.14)
17	VERIFY that the RESPONSE VALUE for ptsLastActiveEvent.0 is greater than or equal to 0.	Pass / Fail (Sec. 5.13.15)
18	VERIFY that the RESPONSE VALUE for ptsLastActiveEvent.0 is less than or equal to 4294967295.	Pass / Fail (Sec. 5.13.15)
19	VERIFY that the RESPONSE VALUE for ptsLastActiveEvent.0 is APPROPRIATE.	Pass / Fail (Sec. 5.13.15)
20	VERIFY that the RESPONSE VALUE for ptsLastInactiveEvent.0 is greater than or equal to 0.	Pass / Fail (Sec. 5.13.16)
21	VERIFY that the RESPONSE VALUE for ptsLastInactiveEvent.0 is less than or equal to 4294967295.	Pass / Fail (Sec. 5.13.16)
22	VERIFY that the RESPONSE VALUE for ptsLastInactiveEvent.0 is APPROPRIATE.	Pass / Fail (Sec. 5.13.16)
23	VERIFY that the RESPONSE VALUE for ptsError.0 is greater than or equal to 1.	Pass / Fail (Sec. 5.13.17)
24	VERIFY that the RESPONSE VALUE for ptsError.0 is less than or equal to 4.	Pass / Fail (Sec. 5.13.17)
25	VERIFY that the RESPONSE VALUE for ptsError.0 is APPROPRIATE.	Pass / Fail (Sec. 5.13.17)

Test Case Results		
Tested By:	***Date Tested:***	***Pass / Fail***
Test Case Notes:		

© 2022 AASHTO / ITE / NEMA

C.2.3.8.6 Set PTS Operational Mode

Test Case: 8.6	***Title:***	*Set PTS Operational Mode*
	Description:	*This test case verifies that the ESS allows a management station to set the operational mode of the pavement treatment system to off, manual, and automatic.*
	Variables:	
	Pass/Fail Criteria:	*The device under test (DUT) shall pass every verification step included within the Test Case to pass the Test Case.*

Step	***Test Procedure***	***Device***
1	SET-UP: GET the following object(s): »ptsOperationalModeV3.0	Pass / Fail (RFC 1157)
2	Determine the RESPONSE VALUE for ptsOperationalModeV3.0. RECORD this information as: »Orig_State	
3	SET the following object(s) to the value(s) shown: »ptsOperationalModeV3.0 = 'off'	Pass / Fail (Sec. 3.5.3.4.1)
4	DELAY for 2 seconds.	
5	SET the following object(s) to the value(s) shown: »ptsOperationalModeV3.0 = 'manual'	Pass / Fail (Sec. 3.5.3.4.1)
6	DELAY for 2 seconds.	
7	SET the following object(s) to the value(s) shown: »ptsOperationalModeV3.0 = 'automatic'	Pass / Fail (Sec. 3.5.3.4.1)
8	DELAY for 2 seconds.	
9	SET the following object(s) to the value(s) shown: »ptsOperationalModeV3.0 = Orig_State	Pass / Fail (Sec. 3.5.3.4.1)

Test Case Results		
Tested By:	***Date Tested:***	***Pass / Fail***
Test Case Notes:		

© 2022 AASHTO / ITE / NEMA

C.2.3.8.7 Manually Activate PTS Sprayer

Test Case: 8.7	***Title:***	*Manually Activate PTS Sprayer*
	Description:	*This test case verifies that the ESS allows a management station to manually activate the sprayer.*
	Variables:	
	Pass/Fail Criteria:	*The device under test (DUT) shall pass every verification step included within the Test Case to pass the Test Case.*

Step	***Test Procedure***	***Device***
1	SET-UP: GET the following object(s): »ptsOperationalModeV3.0 »ptsSignalDuration.0	Pass / Fail (RFC 1157)
2	Determine the RESPONSE VALUE for ptsOperationalModeV3.0. RECORD this information as: »Orig_Mode	
3	Determine the RESPONSE VALUE for ptsSignalDuration.0. RECORD this information as: »Orig_Duration	
4	SET-UP: SET the following object(s) to the value(s) shown: »ptsSignalDuration.0 = 1000	Pass / Fail (RFC 1157)
5	SET-UP: SET the following object(s) to the value(s) shown: »ptsOperationalModeV3.0 = 'manual'	Pass / Fail (RFC 1157)
6	SET the following object(s) to the value(s) shown: »ptsCommandStateV3.0 = 'activate'	Pass / Fail (Sec. 3.5.3.4.2)
7	VERIFY that the PTS signals the sprayer sprays the product mixture for a period of 1.000 seconds.	Pass / Fail (Sec. 3.5.3.4.2)
8	Delay for 1 seconds. VERIFY that the sprayer sprayed the product mixture.	Pass / Fail (Sec. 3.5.3.4.2)
9	SET-UP: GET the following object(s): »ptsCommandStateV3.0	Pass / Fail (RFC 1157)
10	SET-UP: VERIFY that the RESPONSE VALUE for ptsCommandStateV3.0 is equal to 'inactive'.	Pass / Fail (Sec. 5.13.20)
11	SET the following object(s) to the value(s) shown: »ptsOperationalModeV3.0 = Orig_Mode »ptsSignalDuration.0 = Orig_Duration	Pass / Fail (RFC 1157)

Test Case Results

Tested By:	***Date Tested:***	***Pass / Fail***

Test Case Notes:

© 2022 AASHTO / ITE / NEMA

C.2.3.8.8 Retrieve Pavement Treatment Profile with Mobile Sources

Test Case: 8.8	***Title:***	*Retrieve Pavement Treatment Profile with Mobile Sources*
	Description:	*This test case verifies that the ESS allows a management station to determine the speed, location and direction of a mobile pavement treatment system and the quantity of pavement treatment*
	Variables:	
	Pass/Fail Criteria:	*The device under test (DUT) shall pass every verification step included within the Test Case to pass the Test Case.*

Step	***Test Procedure***	***Device***
1	GET the following object(s): »essLatitude.0 »essLongitude.0 »essVehicleSpeed.0 »essVehicleBearing.0 »essOdometer.0 »essReferenceHeight.0	Pass / Fail (Sec. 3.5.3.3.1)
2	VERIFY that the RESPONSE VALUE for essLatitude.0 is greater than or equal to -90000000.	Pass / Fail (Sec. 5.4.1)
3	VERIFY that the RESPONSE VALUE for essLatitude.0 is less than or equal to 90000001.	Pass / Fail (Sec. 5.4.1)
4	VERIFY that the RESPONSE VALUE for essLatitude.0 is APPROPRIATE.	Pass / Fail (Sec. 5.4.1)
5	VERIFY that the RESPONSE VALUE for essLongitude.0 is greater than or equal to -180000000.	Pass / Fail (Sec. 5.4.2)
6	VERIFY that the RESPONSE VALUE for essLongitude.0 is less than or equal to 180000001.	Pass / Fail (Sec. 5.4.2)
7	VERIFY that the RESPONSE VALUE for essLongitude.0 is APPROPRIATE.	Pass / Fail (Sec. 5.4.2)
8	VERIFY that the RESPONSE VALUE for essVehicleSpeed.0 is greater than or equal to 0.	Pass / Fail (Sec. 5.4.3)
9	VERIFY that the RESPONSE VALUE for essVehicleSpeed.0 is less than or equal to 255.	Pass / Fail (Sec. 5.4.3)
10	VERIFY that the RESPONSE VALUE for essVehicleSpeed.0 is APPROPRIATE.	Pass / Fail (Sec. 5.4.3)
11	VERIFY that the RESPONSE VALUE for essVehicleBearing.0 is greater than or equal to 0.	Pass / Fail (Sec. 5.4.4)
12	VERIFY that the RESPONSE VALUE for essVehicleBearing.0 is less than or equal to 361.	Pass / Fail (Sec. 5.4.4)
13	VERIFY that the RESPONSE VALUE for essVehicleBearing.0 is APPROPRIATE.	Pass / Fail (Sec. 5.4.4)
14	VERIFY that the RESPONSE VALUE for essOdometer.0 is greater than or equal to 0.	Pass / Fail (Sec. 5.4.5)
15	VERIFY that the RESPONSE VALUE for essOdometer.0 is less than or equal to 4294967295.	Pass / Fail (Sec. 5.4.5)

Copy Per TRF Distribution Permission © 2022 AASHTO / ITE / NEMA

16	VERIFY that the RESPONSE VALUE for essOdometer.0 is APPROPRIATE.	Pass / Fail (Sec. 5.4.5)
17	VERIFY that the RESPONSE VALUE for essReferenceHeight.0 is greater than or equal to -400.	Pass / Fail (Sec. 5.5.1)
18	VERIFY that the RESPONSE VALUE for essReferenceHeight.0 is less than or equal to 8001.	Pass / Fail (Sec. 5.5.1)
19	VERIFY that the RESPONSE VALUE for essReferenceHeight.0 is APPROPRIATE.	Pass / Fail (Sec. 5.5.1)
20	CONFIGURE: Determine the number of treatments that the specification requires the device to support (PRL 3.6.12). RECORD this information as: »Required_Treatments	
21	GET the following object(s): »numEssTreatments.0	Pass / Fail (RFC 1157)
22	VERIFY that the RESPONSE VALUE for numEssTreatments.0 is greater than or equal to Required_Treatments.	Pass / Fail (Sec. 3.6.12)
23	Determine the RESPONSE VALUE for numEssTreatments.0. RECORD this information as: »Num_Treatments	
24	FOR EACH value, N, from 1 to Num_Treatments, perform Steps 24.1 through 24.7.	
24.1	GET the following object(s): »essPaveTreatProductType.N »essPaveTreatProductForm.N »essPercentProductMix.N	Pass / Fail (Sec. 3.5.3.3.1)
24.2	VERIFY that the essPaveTreatProductType.N field is between 1 and 14.	Pass / Fail (Sec. 5.13.3.2)
24.3	VERIFY that the RESPONSE VALUE for essPaveTreatProductType.N is APPROPRIATE.	Pass / Fail (Sec. 5.13.3.2)
24.4	VERIFY that the essPaveTreatProductForm.N field is between 1 and 4.	Pass / Fail (Sec. 5.13.3.3)
24.5	VERIFY that the RESPONSE VALUE for essPaveTreatProductForm.N is APPROPRIATE.	Pass / Fail (Sec. 5.13.3.3)
24.6	VERIFY that the essPercentProductMix.N field is between 0 and 100.	Pass / Fail (Sec. 5.13.3.4)
24.7	VERIFY that the RESPONSE VALUE for essPercentProductMix.xN is APPROPRIATE.	Pass / Fail (Sec. 5.13.3.4)
25	VERIFY that the essPaveTreatmentAmount.0 field is between 0 and 255.	Pass / Fail (Sec. 5.13.4)
26	VERIFY that the RESPONSE VALUE for essPaveTreatmentAmount.0 is APPROPRIATE.	Pass / Fail (Sec. 5.13.4)
27	VERIFY that the essPaveTreatmentWidth.0 field is between 0 and 255.	Pass / Fail (Sec. 5.13.5)
28	VERIFY that the RESPONSE VALUE for essPaveTreatmentWidth.0 is APPROPRIATE.	Pass / Fail (Sec. 5.13.5)

© 2022 AASHTO / ITE / NEMA Copy Per TRF Distribution Permission

Test Case Results		
Tested By:	***Date Tested:***	***Pass / Fail***
Test Case Notes:		

© 2022 AASHTO / ITE / NEMA

C.2.3.8.9 Retrieve Mobile Pavement Treatment Configuration

Test Case: 8.9	***Title:***	*Retrieve Mobile Pavement Treatment Configuration*
	Description:	*This test case verifies that the ESS allows a management station to retrieve the current pavement treatment configuration for a mobile platform.*
	Variables:	*Required_Treatments* — *PRL 3.6.12*
	Pass/Fail Criteria:	*The device under test (DUT) shall pass every verification step included within the Test Case to pass the Test Case.*

Step	***Test Procedure***	***Device***
1	CONFIGURE: Determine the number of treatments that the specification requires the device to support (PRL 3.6.12). RECORD this information as: »Required_Treatments	
2	GET the following object(s): »numEssTreatments.0	Pass / Fail (RFC 1157)
3	VERIFY that the RESPONSE VALUE for numEssTreatments.0 is greater than or equal to Required_Treatments.	Pass / Fail (Sec. 3.6.12)
4	Determine the RESPONSE VALUE for numEssTreatments.0. RECORD this information as: »Num_Treatments	
5	FOR EACH value, N, from 1 to Num_Treatments, perform Steps 5.1 through 5.7.	
5.1	GET the following object(s): »essPaveTreatProductType.N »essPaveTreatProductForm.N »essPercentProductMix.N	Pass / Fail (Sec. 3.5.3.1.5)
5.2	VERIFY that the essPaveTreatProductType.N field is between 1 and 14.	Pass / Fail (Sec. 5.13.3.2)
5.3	VERIFY that the RESPONSE VALUE for essPaveTreatProductType.N is APPROPRIATE.	Pass / Fail (Sec. 5.13.3.2)
5.4	VERIFY that the essPaveTreatProductForm.N field is between 1 and 4.	Pass / Fail (Sec. 5.13.3.3)
5.5	VERIFY that the RESPONSE VALUE for essPaveTreatProductForm.N is APPROPRIATE.	Pass / Fail (Sec. 5.13.3.3)
5.6	VERIFY that the essPercentProductMix.N field is between 0 and 100.	Pass / Fail (Sec. 5.13.3.4)
5.7	VERIFY that the RESPONSE VALUE for essPercentProductMix.xN is APPROPRIATE.	Pass / Fail (Sec. 5.13.3.4)
6	VERIFY that the essPaveTreatmentAmount.0 field is between 0 and 255.	Pass / Fail (Sec. 5.13.4)
7	VERIFY that the RESPONSE VALUE for essPaveTreatmentAmount.0 is APPROPRIATE.	Pass / Fail (Sec. 5.13.4)
8	VERIFY that the essPaveTreatmentWidth.0 field is between 0 and 255.	Pass / Fail (Sec. 5.13.5)

© 2022 AASHTO / ITE / NEMA Copy Per TRF Distribution Permission

9	VERIFY that the RESPONSE VALUE for essPaveTreatmentWidth.0 is APPROPRIATE.	Pass / Fail (Sec. 5.13.5)

Test Case Results		
Tested By:	***Date Tested:***	***Pass / Fail***
Test Case Notes:		

© 2022 AASHTO / ITE / NEMA

C.2.3.9 Event Logging Tests

C.2.3.9.1 Determine Capabilities of Event Logging Service

Test Case: 9.1	***Title:***	*Determine Capabilities of Event Logging Service*	
	Description:	*This test case verifies that the device indicates that it supports the logging capabilities required by the specification*	
	Variables:	*Required_Event_Classes*	*PRL F.2.3.1.2*
		Required_Event_Configurations	*PRL F.2.3.1.3*
		Required_Event_Log_Size	*PRL F.2.3.1.6*
	Pass/Fail Criteria:	*The device under test (DUT) shall pass every verification step included within the Test Case to pass the Test Case.*	

Step	***Test Procedure***	***Device***
1	CONFIGURE: Determine the number of event classes required by the specification (PRL F.2.3.1.2). RECORD this information as: »Required_Event_Classes	
2	CONFIGURE: Determine the number of event configurations required by the specification (PRL F.2.3.1.3). RECORD this information as: »Required_Event_Configurations	
3	CONFIGURE: Determine the number of events that the log is required to be able to store (PRL F.2.3.1.6). RECORD this information as: »Required_Event_Log_Size	
4	GET the following object(s): »maxEventClasses.0 »maxEventLogConfigs.0 »maxEventLogSize.0	Pass / Fail (Sec. 3.3.2.5)
5	VERIFY that the RESPONSE VALUE for maxEventClasses.0 is greater than or equal to Required_Event_Classes.	Pass / Fail (Sec. D.3.2.2.2)
6	VERIFY that the RESPONSE VALUE for maxEventLogConfigs.0 is greater than or equal to Required_Event_Configurations.	Pass / Fail (Sec. D.3.2.2.3)
7	VERIFY that the RESPONSE VALUE for maxEventLogSize.0 is greater than or equal to Required_Event_Log_Size.	Pass / Fail (Sec. D.3.2.2.6)

Test Case Results		
Tested By:	***Date Tested:***	***Pass / Fail***
Test Case Notes:		

© 2022 AASHTO / ITE / NEMA

C.2.3.9.2 Configure Event Log

Test Case: 9.2	***Title:***	*Configure Event Log*	
	Description:	*This test case configures the event log according to the tester inputs and ensures that the values were accepted and implemented in the device.*	
	Variables:	*Required_Event_Classes*	*PRL F.2.3.1.2*
		Required_Number_Of_Events	*PRL F.2.3.1.6*
		Class_Clear_Time	
		Class_Description	
		Event_Index	
		Event_Mode	
		Event_Compare_Value1	
		Event_Compare_Value2	
		Event_Watch_Object	
		Event_Log_Object	
	Pass/Fail Criteria:	*The device under test (DUT) shall pass every verification step included within the Test Case to pass the Test Case.*	

Step	***Test Procedure***	***Device***
1	CONFIGURE: Determine the event class to use for this test (PRL F.2.3.1.2). RECORD this information as: »Required_Event_Classes	
2	CONFIGURE: Determine the number of events that the device is required to support (PRL F.2.3.1.6). RECORD this information as: »Required_Number_Of_Events	
3	CONFIGURE: Determine the time from which all earlier logs are to be cleared (e.g., per the test plan). RECORD this information as: »Class_Clear_Time	
4	CONFIGURE: Determine the description to be used for the log class (e.g., per the test plan). RECORD this information as: »Class_Description	
5	CONFIGURE: Determine the index of the event type to configure as a part of the test (e.g., per the test plan). RECORD this information as: »Event_Index	
6	CONFIGURE: Determine the mode for the event (e.g., the comparison operator) (e.g., per the test plan). RECORD this information as: »Event_Mode	
7	CONFIGURE: Determine the first comparison value for the event (e.g., per the test plan). RECORD this information as: »Event_Compare_Value1	
8	CONFIGURE: Determine the second comparison value for the event (e.g., per the test plan). RECORD this information as: »Event_Compare_Value2	
9	CONFIGURE: Determine the object to which the value is to be compared (e.g., per the test plan). RECORD this information as: »Event_Watch_Object	

Copy Per TRF Distribution Permission © 2022 AASHTO / ITE / NEMA

10	CONFIGURE: Determine the object that should be logged upon the detection of the event (e.g., per the test plan). RECORD this information as: »Event_Log_Object	
11	Calculate a random value between 1 and Required_Event_Classes. RECORD this information as: »Class_Index	
12	Calculate a random value between 1 and Required_Number_Of_Events. RECORD this information as: »Class_Size_Limit	
13	SET the following object(s) to the value(s) shown: »eventClassLimit.Class_Index = Class_Size_Limit »eventClassClearTime.Class_Index = Class_Clear_Time »eventClassDescription.Class_Index = Class_Description	Pass / Fail (Sec. 3.3.2.2)
14	SET the following object(s) to the value(s) shown: »eventConfigClass.Event_Index = Class_Index »eventConfigMode.Event_Index = Event_Mode »eventConfigCompareValue.Event_Index = Event_Compare_Value1 »eventConfigCompareValue2.Event_Index = Event_Compare_Value2 »eventConfigCompareOID.Event_Index = Event_Watch_Object »eventConfigLogOID.Event_Index = Event_Log_Object »eventConfigAction.Event_Index = 'log' Note: Valid enumerated values for eventConfigMode are defined in NTCIP 1103 v03 Sec. A.7.5.3.	Pass / Fail (Sec. 3.3.2.2)
15	GET the following object(s): »eventConfigStatus.Event_Index	Pass / Fail (Sec. 3.3.2.2)
16	POST-CONDITION: An event type has been configured in the controller.	

Test Case Results		
Tested By:	***Date Tested:***	***Pass / Fail***
Test Case Notes:		

© 2022 AASHTO / ITE / NEMA

C.2.3.9.3 Retrieve Logged Data

Test Case: 9.3	***Title:***	*Retrieve Logged Data*
	Description:	*This test case verifies that the device allows a user to retrieve the logged data.*
	Variables:	*Class_Index*
		Last_Log_Time
		Last_Log_ID
	Pass/Fail Criteria:	*The device under test (DUT) shall pass every verification step included within the Test Case to pass the Test Case.*

Step	***Test Procedure***	***Device***
1	CONFIGURE: Determine the class for which the logged data is to be retrieved (e.g., per the test plan). RECORD this information as: »Class_Index	
2	CONFIGURE: Determine the information about the final log entry; if known (otherwise enter zeros). RECORD this information as: »Last_Log_Time (the time at or before which the last event to be logged occurred) »Last_Log_ID (the ID of the last event to be logged)	
3	GET the following object(s): »eventClassNumRowsInLog.Class_Index »eventClassNumEvents.Class_Index	Pass / Fail (Sec. 3.3.2.3)
4	Determine the RESPONSE VALUE for eventClassNumRowsInLog.Class_Index. RECORD this information as: »Rows	
5	FOR EACH value, N, from 1 to Rows, perform Steps 5.1 through 5.2.	
5.1	GET the following object(s): »eventLogID.Class_Index.N »eventLogTime.Class_Index.N »eventLogValue.Class_Index.N	Pass / Fail (Sec. 3.3.2.3)
5.2	IF N is equal to Rows, then proceed to Step 5.2.1; otherwise, proceed to EXIT.	
5.2.1	IF Last_Log_Time is greater than 0, then proceed to Step 5.2.1.1; otherwise, proceed to EXIT.	
5.2.1.1	VERIFY that the RESPONSE VALUE for eventLogTime.Class_Index.N is greater than or equal to Last_Log_Time.	Pass / Fail (Sec. 3.3.2.3)
5.2.1.2	VERIFY that the RESPONSE VALUE for eventLogID.Class_Index.N is equal to Last_Log_ID.	Pass / Fail (Sec. 3.3.2.3)

Test Case Results		
Tested By:	***Date Tested:***	***Pass / Fail***
Test Case Notes:		

© 2022 AASHTO / ITE / NEMA

C.2.3.9.4 Clear Log

Test Case: 9.4	***Title:***	*Clear Log*
	Description:	*This test case verifies that the device allows the user to clear the log for a specified class.*
	Variables:	*Class_Index* *Class_Clear_Time*
	Pass/Fail Criteria:	*The device under test (DUT) shall pass every verification step included within the Test Case to pass the Test Case.*

Step	***Test Procedure***	***Device***
1	CONFIGURE: Determine the class of events to be cleared from the log (e.g., per the test plan). RECORD this information as: »Class_Index	
2	CONFIGURE: Determine the time from which all earlier logs are to be cleared (e.g., per the test plan). RECORD this information as: »Class_Clear_Time	
3	SET the following object(s) to the value(s) shown: »eventClassClearTime.Class_Index = Class_Clear_Time	Pass / Fail (Sec. 3.3.2.4)
4	GET the following object(s): »eventClassNumRowsInLog.Class_Index	Pass / Fail (RFC 1157)
5	Determine the RESPONSE VALUE for eventClassNumRowsInLog.Class_Index. RECORD this information as: »Rows	
6	FOR EACH value, N, from 1 to Rows, perform Steps 6.1 through 6.2.	
6.1	GET the following object(s): »eventLogTime.Class_Index.N	Pass / Fail (RFC 1157)
6.2	VERIFY that the RESPONSE VALUE for eventLogTime.Class_Index.N is greater than Class_Clear_Time.	Pass / Fail (Sec. 3.3.2.4)
7	POST-CONDITION: Log entries older than Class_Clear_Time have been deleted from the log.	

Test Case Results		
Tested By:	***Date Tested:***	***Pass / Fail***
Test Case Notes:		

© 2022 AASHTO / ITE / NEMA

C.2.3.9.5 Determine Total Number of Events

Test Case: 9.5	***Title:***	*Determine Total Number of Events*
	Description:	*This test case verifies that the device allows the user to determine the total number of events in the log.*
	Variables:	
	Pass/Fail Criteria:	*The device under test (DUT) shall pass every verification step included within the Test Case to pass the Test Case.*

Step	***Test Procedure***	***Device***
1	GET the following object(s): »maxEventClasses.0 »maxEventLogConfigs.0 »maxEventLogSize.0	Pass / Fail (Sec. 3.3.2.5)
2	Determine the RESPONSE VALUE for maxEventClasses.0. RECORD this information as: »Max_Event_Classes	
3	Determine the value of 0. RECORD this information as: »Total_Events	
4	FOR EACH value, N, from 1 to Max_Event_Classes, perform Steps 4.1 through 4.2.	
4.1	GET the following object(s): »eventClassNumRowsInLog.N »eventClassNumEvents.N	Pass / Fail (RFC 1157)
4.2	Calculate the sum of Total_Events and eventClassNumRowsInLog.N. RECORD this information as: »Total_Events	
5	GET the following object(s): »numEvents.0	Pass / Fail (Sec. 3.3.2.6)
6	VERIFY that the RESPONSE VALUE for numEvents.0 is equal to Total_Events. Note: If an event occurred during this process, this condition does not hold true.	Pass / Fail (Sec. 3.3.2.6)

Test Case Results		
Tested By:	***Date Tested:***	***Pass / Fail***
Test Case Notes:		

© 2022 AASHTO / ITE / NEMA

C.2.3.9.6 Verify Log Limit Storage

Test Case: 9.6	***Title:***	*Verify Log Limit Storage*
	Description:	*This test case verifies that the device stores only the latest of the maximum number of events per class.*
	Variables:	*Class_Index* *Class_Size_Limit*
	Pass/Fail Criteria:	*The device under test (DUT) shall pass every verification step included within the Test Case to pass the Test Case.*

Step	***Test Procedure***	***Device***
1	CONFIGURE: Determine the class for which the logged data is to be retrieved (e.g., per the test plan). RECORD this information as: »Class_Index	
2	CONFIGURE: Determine the log size limit that the test imposes on the class (e.g., per the test plan). RECORD this information as: »Class_Size_Limit	
3	PERFORM the test case labeled 'Configure Event Log' (2.3.9.2).	Pass / Fail
4	Create conditions to cause the device to log the event Class_Size_Limit times. Note: This may require physically changing a sensor reading or setting an object within the device.	
5	GET the following object(s): »eventClassNumRowsInLog.Class_Index »eventClassNumEvents.Class_Index	Pass / Fail (Sec. 3.3.2.3)
6	VERIFY that the RESPONSE VALUE for eventClassNumRowsInLog.Class_Index is equal to Class_Size_Limit.	Pass / Fail (Sec. 3.3.2.2)
7	Determine the RESPONSE VALUE for eventClassNumRowsInLog.Class_Index. RECORD this information as: »Rows	
8	FOR EACH value, N, from 1 to Rows, perform Steps 8.1 through 8.3.	
8.1	GET the following object(s): »eventLogID.Class_Index.N »eventLogTime.Class_Index.N »eventLogValue.Class_Index.N	Pass / Fail (Sec. 3.3.2.3)
8.2	IF N is equal to 1, then proceed to Step 8.2.1; otherwise, proceed to Step 8.3.1.	
8.2.1	Determine the RESPONSE VALUE for eventLogTime.Class_Index.N. RECORD this information as: »Old_Timestamp GO TO Step 9 (after any looping logic is completed).	
8.3.1	Determine the RESPONSE VALUE for eventLogTime.Class_Index.N. RECORD this information as: »Limit_Timestamp	
9	Create conditions to cause the device to log the event one more time.	

© 2022 AASHTO / ITE / NEMA Copy Per TRF Distribution Permission

10	GET the following object(s): »eventClassNumRowsInLog.Class_Index »eventClassNumEvents.Class_Index	Pass / Fail (Sec. 3.3.2.3)
11	VERIFY that the RESPONSE VALUE for eventClassNumRowsInLog.Class_Index is equal to Class_Size_Limit.	Pass / Fail (Sec. 3.3.2.2)
12	Determine the RESPONSE VALUE for eventClassNumRowsInLog.Class_Index. RECORD this information as: »Rows	
13	FOR EACH value, N, from 1 to Rows, perform Steps 13.1 through 13.3.	
13.1	GET the following object(s): »eventLogID.Class_Index.N »eventLogTime.Class_Index.N »eventLogValue.Class_Index.N	Pass / Fail (Sec. 3.3.2.3)
13.2	IF N is equal to 1, then proceed to Step 13.2.1; otherwise, proceed to Step 13.3.1.	
13.2.1	VERIFY that the RESPONSE VALUE for eventLogTime.Class_Index.N is greater than Old_Timestamp. GO TO Step 14 (after any looping logic is completed).	Pass / Fail (Sec. 3.3.2.3)
13.3.1	IF N is equal to Rows, then proceed to Step 13.3.1.1; otherwise, proceed to Step 14.	
13.3.1.1	VERIFY that the RESPONSE VALUE for eventLogTime.Class_Index.N is greater than Limit_Timestamp.	Pass / Fail (Sec. 3.3.2.3)
14	POST-CONDITION: The event log has been filled for subject event class.	

Test Case Results		
Tested By:	***Date Tested:***	***Pass / Fail***
Test Case Notes:		

© 2022 AASHTO / ITE / NEMA

C.2.3.9.7 Verify Support for an On-Change Event

Test Case: 9.7	***Title:***	*Verify Support for an On-Change Event*
	Description:	*This test case verifies that the device allows configuration of an on-change event and the device logs events appropriately.*
	Variables:	*Event_Index*
	Pass/Fail Criteria:	*The device under test (DUT) shall pass every verification step included within the Test Case to pass the Test Case.*

Step	***Test Procedure***	***Device***
1	CONFIGURE: Determine the index of the event type to configure as a part of the test (e.g., per the test plan). RECORD this information as: »Event_Index	
2	PERFORM the test case labeled 'Configure Event Log' (2.3.9.2) with the following parameters: »Event_Mode = 2	Pass / Fail
3	GET the following object(s): »globalTime.0	Pass / Fail (RFC 1157)
4	Determine the RESPONSE VALUE for globalTime.0. RECORD this information as: »Time	
5	Create an event for the device to log. Note: This may require physically changing a sensor reading or setting an object within the device.	
6	PERFORM the test case labeled 'Retrieve Logged Data' (2.3.9.3) with the following parameters: »Last_Log_Time = Time »Last_Log_ID = Event_Index	Pass / Fail

Test Case Results		
Tested By:	***Date Tested:***	***Pass / Fail***
Test Case Notes:		

© 2022 AASHTO / ITE / NEMA

C.2.3.9.8 Verify Support for a Greater Than Event

Test Case: 9.8	***Title:***	*Verify Support for a Greater Than Event*
	Description:	*This test case verifies that the device allows configuration of a greater than event and the device logs events appropriately.*
	Variables:	*Event_Index*
	Pass/Fail Criteria:	*The device under test (DUT) shall pass every verification step included within the Test Case to pass the Test Case.*

Step	***Test Procedure***	***Device***
1	CONFIGURE: Determine the index of the event type to configure as a part of the test (e.g., per the test plan). RECORD this information as: »Event_Index	
2	PERFORM the test case labeled 'Configure Event Log' (2.3.9.2) with the following parameters: »Event_Mode = 3	Pass / Fail
3	GET the following object(s): »globalTime.0	Pass / Fail (RFC 1157)
4	Determine the RESPONSE VALUE for globalTime.0. RECORD this information as: »Time	
5	Create an event for the device to log. Note: This may require physically changing a sensor reading or setting an object within the device.	
6	PERFORM the test case labeled 'Retrieve Logged Data' (2.3.9.3) with the following parameters: »Last_Log_Time = Time »Last_Log_ID = Event_Index	Pass / Fail

Test Case Results		
Tested By:	***Date Tested:***	***Pass / Fail***
Test Case Notes:		

© 2022 AASHTO / ITE / NEMA

C.2.3.9.9 Verify Support for a Less Than Event

Test Case: 9.9	***Title:***	*Verify Support for a Less Than Event*
	Description:	*This test case verifies that the device allows configuration of a less than event and the device logs events appropriately.*
	Variables:	*Event_Index*
	Pass/Fail Criteria:	*The device under test (DUT) shall pass every verification step included within the Test Case to pass the Test Case.*

Step	***Test Procedure***	***Device***
1	CONFIGURE: Determine the index of the event type to configure as a part of the test (e.g., per the test plan). RECORD this information as: »Event_Index	
2	PERFORM the test case labeled 'Configure Event Log' (2.3.9.2) with the following parameters: »Event_Mode = 4	Pass / Fail
3	GET the following object(s): »globalTime.0	Pass / Fail (RFC 1157)
4	Determine the RESPONSE VALUE for globalTime.0. RECORD this information as: »Time	
5	Create an event for the device to log. Note: This may require physically changing a sensor reading or setting an object within the device.	
6	PERFORM the test case labeled 'Retrieve Logged Data' (2.3.9.3) with the following parameters: »Last_Log_Time = Time »Last_Log_ID = Event_Index	Pass / Fail

Test Case Results

Tested By:	***Date Tested:***	***Pass / Fail***

Test Case Notes:

© 2022 AASHTO / ITE / NEMA

C.2.3.9.10 Verify Support for a Hysteresis Event

Test Case: 9.10	***Title:***	*Verify Support for a Hysteresis Event*
	Description:	*This test case verifies that the device allows configuration of a hysteresis event and the ESS logs events appropriately.*
	Variables:	*Event_Index*
	Pass/Fail Criteria:	*The device under test (DUT) shall pass every verification step included within the Test Case to pass the Test Case.*

Step	***Test Procedure***	***Device***
1	CONFIGURE: Determine the index of the event type to configure as a part of the test (e.g., per the test plan). RECORD this information as: »Event_Index	
2	PERFORM the test case labeled 'Configure Event Log' (2.3.9.2) with the following parameters: »Event_Mode = 5	Pass / Fail
3	GET the following object(s): »globalTime.0	Pass / Fail (RFC 1157)
4	Determine the RESPONSE VALUE for globalTime.0. RECORD this information as: »Time	
5	Create an event for the device to log. Note: This may require physically changing a sensor reading or setting an object within the device.	
6	PERFORM the test case labeled 'Retrieve Logged Data' (2.3.9.3) with the following parameters: »Last_Log_Time = Time »Last_Log_ID = Event_Index	Pass / Fail

Test Case Results

Tested By:	***Date Tested:***	***Pass / Fail***

Test Case Notes:

© 2022 AASHTO / ITE / NEMA

C.2.3.9.11 Verify Support for a Periodic Event

Test Case: 9.11	***Title:***	*Verify Support for a Periodic Event*
	Description:	*This test case verifies that the device allows configuration of a Periodic event and the ESS logs events appropriately.*
	Variables:	*Event_Index*
	Pass/Fail Criteria:	*The device under test (DUT) shall pass every verification step included within the Test Case to pass the Test Case.*

Step	***Test Procedure***	***Device***
1	CONFIGURE: Determine the index of the event type to configure as a part of the test (e.g., per the test plan). RECORD this information as: »Event_Index	
2	PERFORM the test case labeled 'Configure Event Log' (2.3.9.2) with the following parameters: »Event_Mode = 6	Pass / Fail
3	GET the following object(s): »globalTime.0	Pass / Fail (RFC 1157)
4	Determine the RESPONSE VALUE for globalTime.0. RECORD this information as: »Time	
5	Create an event for the device to log. Note: This may require physically changing a sensor reading or setting an object within the device.	
6	PERFORM the test case labeled 'Retrieve Logged Data' (2.3.9.3) with the following parameters: »Last_Log_Time = Time »Last_Log_ID = Event_Index	Pass / Fail

Test Case Results		
Tested By:	***Date Tested:***	***Pass / Fail***
Test Case Notes:		

© 2022 AASHTO / ITE / NEMA

C.2.3.9.12 Verify Support for a Bit-flag Event

Test Case: 9.12	***Title:***	*Verify Support for a Bit-flag Event*
	Description:	*This test case verifies that the device allows configuration of a bit-flag event and the device logs events appropriately.*
	Variables:	*Event_Index*
	Pass/Fail Criteria:	*The device under test (DUT) shall pass every verification step included within the Test Case to pass the Test Case.*

Step	***Test Procedure***	***Device***
1	CONFIGURE: Determine the index of the event type to configure as a part of the test (e.g., per the test plan). RECORD this information as: »Event_Index	
2	PERFORM the test case labeled 'Configure Event Log' (2.3.9.2) with the following parameters: »Event_Mode = 7	Pass / Fail
3	GET the following object(s): »globalTime.0	Pass / Fail (RFC 1157)
4	Determine the RESPONSE VALUE for globalTime.0. RECORD this information as: »Time	
5	Create an event for the device to log. Note: This may require physically changing a sensor reading or setting an object within the device.	
6	PERFORM the test case labeled 'Retrieve Logged Data' (2.3.9.3) with the following parameters: »Last_Log_Time = Time »Last_Log_ID = Event_Index	Pass / Fail

Test Case Results		
Tested By:	***Date Tested:***	***Pass / Fail***
Test Case Notes:		

© 2022 AASHTO / ITE / NEMA

C.2.3.9.13 Determine Configuration of Logging Service

Test Case: 9.13	***Title:***	*Determine Configuration of Logging Service*
	Description:	*This test case verifies that the device returns the configuration of the logging service.*
	Variables:	
	Pass/Fail Criteria:	*The device under test (DUT) shall pass every verification step included within the Test Case to pass the Test Case.*

Step	***Test Procedure***	***Device***
1	GET the following object(s): »maxEventClasses.0 »maxEventLogConfigs.0 »maxEventLogSize.0	Pass / Fail (Sec. 3.3.2.5)
2	Determine the values retrieved from the device. RECORD this information as: »Max_Event_Classes »Max_Configs »Max_Log_Size	
3	FOR EACH value, N, from 1 to Max_Event_Classes, perform Step 3.1.	
3.1	GET the following object(s): »eventClassLimit.N »eventClassClearTime.N »eventClassDescription.N	Pass / Fail (Sec. 3.3.2.1)
4	FOR EACH value, N, from 1 to Max_Configs, perform Step 4.1.	
4.1	GET the following object(s): »eventConfigClass.N »eventConfigMode.N »eventConfigCompareValue.N »eventConfigCompareValue2.N »eventConfigCompareOID.N »eventConfigLogOID.N »eventConfigAction.N »eventConfigStatus.N	Pass / Fail (Sec. 3.3.2.1)

Test Case Results

Tested By:	***Date Tested:***	***Pass / Fail***

Test Case Notes:

© 2022 AASHTO / ITE / NEMA

C.2.3.10 Global Tests

C.2.3.10.1 Explore Data

Test Case: 10.1	***Title:***	*Explore Data*
	Description:	*This test case verifies that the device properly responds to a GET-NEXT request.*
	Variables:	
	Pass/Fail Criteria:	*The device under test (DUT) shall pass every verification step included within the Test Case to pass the Test Case.*

Step	***Test Procedure***	***Device***
1	Determine the OID value of 'null'. RECORD this information as: »Last_Object	
2.1	Send a GET-NEXT request for the following object(s): »Last_Object VERIFY that the RESPONSE ERROR is equal to 'noError' or 'noSuchName'.	Pass / Fail (Sec. F.2.1.1.3)
2.2	Determine whether the OID of the returned object is lexigraphically larger than the OID contained in the request. RECORD this information as: »Continue	
2.3	IF the RESPONSE ERROR is equal to noError, then proceed to Step 2.3.1; otherwise, proceed to Step 2.4.1.	
2.3.1	VERIFY that Continue is equal to true. GO TO Step 2.5.	Pass / Fail (RFC 1157)
2.4.1	VERIFY that the returned OID is identical to that sent in the request.	Pass / Fail (RFC 1157)
2.5	Determine the OID of the retrieved object. RECORD this information as: »Last_Object	
2	IF the RESPONSE ERROR is equal to noError and Continue equals true, then proceed to Step 2.1; otherwise, proceed to EXIT.	

Test Case Results		
Tested By:	***Date Tested:***	***Pass / Fail***
Test Case Notes:		

© 2022 AASHTO / ITE / NEMA

C.2.3.10.2 Determine Device Component Information

Test Case: 10.2	***Title:***	*Determine Device Component Information*
	Description:	*This test case verifies that the data stored in the module table reflects the information about the device.*
	Variables:	
	Pass/Fail Criteria:	*The device under test (DUT) shall pass every verification step included within the Test Case to pass the Test Case.*

Step	***Test Procedure***	***Device***
1	GET the following object(s): »globalMaxModules.0	Pass / Fail (Sec. F.2.2.1.1)
2	Determine the RESPONSE VALUE for globalMaxModules.0. RECORD this information as: »Num_Modules	
3	FOR EACH value, N, from 1 to Num_Modules, perform Steps 3.1 through 3.6.	
3.1	GET the following object(s): »moduleDeviceNode.N »moduleMake.N »moduleModel.N »moduleVersion.N »moduleType.N	Pass / Fail (Sec. F.2.2.1.1)
3.2	VERIFY that the RESPONSE VALUE for moduleDeviceNode.N is APPROPRIATE. Note: Should be equal to '1.3.6.1.4.1.1206.4.2.5' for ESS	Pass / Fail (Sec. F.2.2.1.1)
3.3	VERIFY that the RESPONSE VALUE for moduleMake.N is APPROPRIATE.	Pass / Fail (Sec. F.2.2.1.1)
3.4	VERIFY that the RESPONSE VALUE for moduleModel.N is APPROPRIATE.	Pass / Fail (Sec. F.2.2.1.1)
3.5	VERIFY that the RESPONSE VALUE for moduleVersion.N is APPROPRIATE.	Pass / Fail (Sec. F.2.2.1.1)
3.6	VERIFY that the RESPONSE VALUE for moduleType.N is APPROPRIATE.	Pass / Fail (Sec. F.2.2.1.1)

Test Case Results		
Tested By:	***Date Tested:***	***Pass / Fail***
Test Case Notes:		

© 2022 AASHTO / ITE / NEMA

C.2.3.10.3 Retrieve Device Configuration Identifier

Test Case: 10.3	***Title:***	*Retrieve Device Configuration Identifier*
	Description:	*This test case verifies that the device allows the user to retrieve a code that only changes when changes are made to the controller configuration.*
	Variables:	
	Pass/Fail Criteria:	*The device under test (DUT) shall pass every verification step included within the Test Case to pass the Test Case.*

Step	***Test Procedure***	***Device***
1	GET the following object(s): »globalSetIDParameter.0	Pass / Fail (Sec. F.2.2.1.2)
2	Determine the RESPONSE VALUE for globalSetIDParameter.0. RECORD this information as: »ID	
3	DELAY for 5 seconds.	
4	GET the following object(s): »globalSetIDParameter.0	Pass / Fail (Sec. F.2.2.1.2)
5	VERIFY that the RESPONSE VALUE for globalSetIDParameter.0 is equal to ID.	Pass / Fail (NTCIP 1201 V03 2.2.1)
6	GET the following object(s): »essNtcipSiteDescription.0	Pass / Fail (RFC 1157)
7	Determine the RESPONSE VALUE for essNtcipSiteDescription.0. RECORD this information as: »Description	
8	SET the following object(s) to the value(s) shown: »essNtcipSiteDescription.0 = 'Test Location'	Pass / Fail (Sec. 3.5.1.1.3)
9	GET the following object(s): »globalSetIDParameter.0	Pass / Fail (RFC 1157)
10	VERIFY that the RESPONSE VALUE for globalSetIDParameter.0 is not equal to ID.	Pass / Fail (NTCIP 1201 v03 2.2.1)
11	SET the following object(s) to the value(s) shown: »essNtcipSiteDescription.0 = Description	Pass / Fail (Sec. 3.5.1.1.3)

Test Case Results		
Tested By:	***Date Tested:***	***Pass / Fail***
Test Case Notes:		

© 2022 AASHTO / ITE / NEMA

C.2.3.10.4 Determine Supported Standards

Test Case: 10.4	***Title:***	*Determine Supported Standards*
	Description:	*This test case verifies that the device indicates the standards that it supports.*
	Variables:	
	Pass/Fail Criteria:	*The device under test (DUT) shall pass every verification step included within the Test Case to pass the Test Case.*

Step	***Test Procedure***	***Device***
1	GET the following object(s): »controllerBaseStandards.0	Pass / Fail (Sec. F.2.2.1.3)
2	VERIFY that the RESPONSE VALUE for controllerBaseStandards.0 properly identifies the standards that the device supports and the information is presented in the correct format.	Pass / Fail (Sec. F.2.2.1.3)

Test Case Results		
Tested By:	***Date Tested:***	***Pass / Fail***
Test Case Notes:		

C.2.3.10.5 Retrieve System Name

Test Case: 10.5	***Title:***	*Retrieve System Name*
	Description:	*This test case verifies that the device allows the user to retrieve the system name of the device.*
	Variables:	
	Pass/Fail Criteria:	*The device under test (DUT) shall pass every verification step included within the Test Case to pass the Test Case.*

Step	***Test Procedure***	***Device***
1	GET the following object(s): »sysName.0	Pass / Fail (Sec. F.2.2.1.4)
2	VERIFY that the RESPONSE VALUE for sysName.0 is APPROPRIATE.	Pass / Fail (RFC 1213 Clause 6)

Test Case Results		
Tested By:	***Date Tested:***	***Pass / Fail***
Test Case Notes:		

© 2022 AASHTO / ITE / NEMA

C.2.3.10.6 Set Time

Test Case: 10.6	***Title:***	*Set Time*
	Description:	*This test case verifies that the device allows a set to the UTC time to a new value and ensure that the new value was accepted, implemented and that the clock is still working.*
	Variables:	
	Pass/Fail Criteria:	*The device under test (DUT) shall pass every verification step included within the Test Case to pass the Test Case.*

Step	***Test Procedure***	***Device***
1	Determine the time the test started according to the test computer. RECORD this information as: »Test_Time	
2	GET the following object(s): »globalTime.0	Pass / Fail (Sec. F.2.2.1.5.1)
3	Determine the RESPONSE VALUE for globalTime.0. RECORD this information as: »UTC_Time	
4	Calculate the value of UTC_Time plus 7200 seconds. RECORD this information as: »New_UTC_Time	
5	SET the following object(s) to the value(s) shown: »globalTime.0 = New_UTC_Time Note: This advances the clock by two hours.	Pass / Fail (Sec. F.2.2.1.5.1)
6	Calculate UTC_Time plus 7200 plus the amount of time that has elapsed since Step 1. RECORD this information as: »Expected_Time	
7	GET the following object(s): »globalTime.0	Pass / Fail (Sec. F.2.2.1.5.2)
8	VERIFY that the RESPONSE VALUE for globalTime.0 is roughly equal to Expected_Time.	Pass / Fail (Sec. F.2.2.1.5.2)
9	DELAY for 15 seconds.	
10	GET the following object(s): »globalTime.0	Pass / Fail (Sec. F.2.2.1.5.2)
11	VERIFY that the RESPONSE VALUE for globalTime.0 is roughly equal to Expected_Time plus 15 seconds.	Pass / Fail (Sec. F.2.2.1.5.2)
12	Calculate the time to set in the agent to restore the original value. RECORD this information as: »Restore_UTC_Time	
13	SET the following object(s) to the value(s) shown: »globalTime.0 = Restore_UTC_Time	Pass / Fail (Sec. F.2.2.1.5.1)

Test Case Results		
Tested By:	***Date Tested:***	***Pass / Fail***
Test Case Notes:		

© 2022 AASHTO / ITE / NEMA

C.2.3.10.7 Monitor External Port Information

Test Case: 10.7	***Title:***	*Monitor External Port Information*	
	Description:	*This test case verifies that the device allows the user to retrieve information about the device's external port(s).*	
	Variables:	*Required_Ports*	*F.2.3.2*
	Pass/Fail Criteria:	*The device under test (DUT) shall pass every verification step included within the Test Case to pass the Test Case.*	

Step	***Test Procedure***	***Device***
1	CONFIGURE: Determine the number of external analog ports required by the specification (F.2.3.2). RECORD this information as: »Required_Ports	
2	GET the following object(s): »maxAuxIOv2TableNumAnalogPorts.0 VERIFY that there is no response.	Pass / Fail (Sec. F.2.2.1.6)
3	Determine the RESPONSE VALUE for maxAuxIOv2TableNumAnalogPorts.0. RECORD this information as: »Num_Ports	
4	FOR EACH value, N, from 1 to Num_Ports, perform Steps 4.1 through 4.17.	
4.1	GET the following object(s): »auxIOv2PortType.N »auxIOv2PortNumber.N »auxIOv2PortDescription.N »auxIOv2PortResolution.N »auxIOv2PortDirection.N	Pass / Fail (Sec. F.2.2.1.6)
4.2	VERIFY that the RESPONSE VALUE for auxIOv2PortType.N is equal to 2.	Pass / Fail (NTCIP 1201 v03 Sec. 2.9.3.1)
4.3	VERIFY that the RESPONSE VALUE for auxIOv2PortNumber.N is equal to N.	Pass / Fail (NTCIP 1201 v03 Sec. 2.9.3.2)
4.4	VERIFY that the RESPONSE VALUE for auxIOv2PortDescription.N is no more than 255 characters and contains only DisplayString characters.	Pass / Fail (NTCIP 1201 v03 Sec. 2.9.3.3)
4.5	VERIFY that the RESPONSE VALUE for auxIOv2PortDescription.N is APPROPRIATE.	Pass / Fail (NTCIP 1201 v03 Sec. 2.9.3.3)
4.6	VERIFY that the RESPONSE VALUE for auxIOv2PortResolution.N is greater than or equal to 1.	Pass / Fail (NTCIP 1201 v03 Sec. 2.9.3.4)
4.7	VERIFY that the RESPONSE VALUE for auxIOv2PortResolution.N is less than or equal to 32.	Pass / Fail (NTCIP 1201 v03 Sec. 2.9.3.4)
4.8	VERIFY that the RESPONSE VALUE for auxIOv2PortResolution.N is APPROPRIATE.	Pass / Fail (NTCIP 1201 v03 Sec. 2.9.3.4)

© 2022 AASHTO / ITE / NEMA Copy Per TRF Distribution Permission

4.9	Determine the RESPONSE VALUE for auxIOv2PortResolution.N. RECORD this information as: »Resolution	
4.10	VERIFY that the RESPONSE VALUE for auxIOv2PortDirection.N is greater than or equal to 1.	Pass / Fail (NTCIP 1201 v03 Sec. 2.9.3.6)
4.11	VERIFY that the RESPONSE VALUE for auxIOv2PortDirection.N is less than or equal to 3.	Pass / Fail (NTCIP 1201 v03 Sec. 2.9.3.6)
4.12	VERIFY that the RESPONSE VALUE for auxIOv2PortDirection.N is APPROPRIATE.	Pass / Fail (NTCIP 1201 v03 Sec. 2.9.3.6)
4.13	GET the following object(s): »auxIOv2PortValue.N »auxIOv2PortLastCommandedState.N	Pass / Fail (Sec. F.2.2.2.1)
4.14	VERIFY that the RESPONSE VALUE for auxIOv2PortValue.N is greater than 0 and less than the port's maximum value as defined by auxIOv2PortResolution.N (i.e., (2^Resolution) - 1).	Pass / Fail (NTCIP 1201 v03 Sec. 2.9.3.5)
4.15	VERIFY that the RESPONSE VALUE for auxIOv2PortValue.N is APPROPRIATE.	Pass / Fail (NTCIP 1201 v03 Sec. 2.9.3.5)
4.16	VERIFY that the RESPONSE VALUE for auxIOv2PortLastCommandedState.N is greater than 0 and less than the port's maximum value as defined by auxIOv2PortResolution.N (i.e., (2^Resolution) - 1).	Pass / Fail (NTCIP 1201 v03 Sec. 2.9.3.7)
4.17	VERIFY that the RESPONSE VALUE for auxIOv2PortLastCommandedState.N is APPROPRIATE.	Pass / Fail (NTCIP 1201 v03 Sec. 2.9.3.7)

Test Case Results		
Tested By:	***Date Tested:***	***Pass / Fail***
Test Case Notes:		

© 2022 AASHTO / ITE / NEMA

C.2.3.10.8 Configure External Port

Test Case: 10.8	***Title:***	*Configure External Port*	
	Description:	*This test case verifies that the device allows the user to configure the external port.*	
	Variables:	*Required_Ports*	*F.2.3.2*
	Pass/Fail Criteria:	*The device under test (DUT) shall pass every verification step included within the Test Case to pass the Test Case.*	

Step	***Test Procedure***	***Device***
1	CONFIGURE: Determine the number of external analog ports required by the specification (F.2.3.2). RECORD this information as: »Required_Ports	
2	Determine a random port from 1 to Required_Ports. RECORD this information as: »Subject_Port	
3	GET the following object(s): »auxIOv2PortDescription.Subject_Port »auxIOv2PortResolution.Subject_Port	Pass / Fail (RFC 1157)
4	Determine the RESPONSE VALUE for auxIOv2PortDescription.Subject_Port. RECORD this information as: »Description	
5	Determine the RESPONSE VALUE for auxIOv2PortResolution.Subject_Port. RECORD this information as: »Resolution	
6	Calculate a random value between 0 and the maximum value supported by the device. RECORD this information as: »Value	
7	SET the following object(s) to the value(s) shown: » auxIOv2PortDescription.Subject_Port = 'Test'	Pass / Fail (Sec. F.2.2.1.7)
8	GET the following object(s): » auxIOv2PortDescription.Subject_Port	Pass / Fail (RFC 1157)
9	VERIFY that the RESPONSE VALUE for auxIOv2PortDescription.Subject_Port is equal to "Test".	Pass / Fail (NTCIP 1201 v03 Sec. 2.9.3.3)
10	SET the following object(s) to the value(s) shown: » auxIOv2PortDescription.Subject_Port = Description	Pass / Fail (Sec. F.2.2.1.7)
11	SET the following object(s) to the value(s) shown: »auxIOv2PortValue.Subject_Port = Value	Pass / Fail (Sec. F.2.2.4.1)
12	GET the following object(s): » auxIOv2PortValue.Subject_Port » auxIOv2PortLastCommandedState.Subject_Port	Pass / Fail (Sec. F.2.2.2.1)
13	VERIFY that the RESPONSE VALUE for auxIOv2PortLastCommandedState.Subject_Port is equal to Value.	Pass / Fail (NTCIP 1201 v03 Sec. 2.9.3.7)

© 2022 AASHTO / ITE / NEMA Copy Per TRF Distribution Permission

Test Case Results		
Tested By:	***Date Tested:***	***Pass / Fail***
Test Case Notes:		

© 2022 AASHTO / ITE / NEMA

C.2.3.11 Backward Compatibility Tests

C.2.3.11.1 Version 1 Wind Sensor Meta Data

Test Case: 11.1	***Title:***	*Version 1 Wind Sensor Meta Data*
	Description:	*This test case verifies that the device allows the user to retrieve the version 1 wind sensor meta data.*
	Variables:	
	Pass/Fail Criteria:	*The device under test (DUT) shall pass every verification step included within the Test Case to pass the Test Case.*

Step	***Test Procedure***	***Device***
1	GET the following object(s): »essWindSensorHeight.0	Pass / Fail (Sec. 3.5.4.1)
2	VERIFY that the RESPONSE VALUE for essWindSensorHeight.0 is greater than or equal to -1000.	Pass / Fail (Sec. 5.5.3)
3	VERIFY that the RESPONSE VALUE for essWindSensorHeight.0 is less than or equal to 1001.	Pass / Fail (Sec. 5.5.3)
4	VERIFY that the RESPONSE VALUE for essWindSensorHeight.0 is APPROPRIATE.	Pass / Fail (Sec. 5.5.3)

Test Case Results		
Tested By:	***Date Tested:***	***Pass / Fail***
Test Case Notes:		

© 2022 AASHTO / ITE / NEMA

C.2.3.11.2 Version 1 Average Wind Sensor Data

Test Case: 11.2	***Title:***	*Version 1 Average Wind Sensor Data*
	Description:	*This test case verifies that the device allows the user to retrieve the version 1 average wind data.*
	Variables:	
	Pass/Fail Criteria:	*The device under test (DUT) shall pass every verification step included within the Test Case to pass the Test Case.*

Step	***Test Procedure***	***Device***
1	GET the following object(s): »essAvgWindDirection.0 »essAvgWindSpeed.0	Pass / Fail (Sec. 3.5.4.2)
2	VERIFY that the RESPONSE VALUE for essAvgWindDirection.0 is greater than or equal to 0.	Pass / Fail (Sec. 5.6.1)
3	VERIFY that the RESPONSE VALUE for essAvgWindDirection.0 is less than or equal to 361.	Pass / Fail (Sec. 5.6.1)
4	VERIFY that the RESPONSE VALUE for essAvgWindDirection.0 is APPROPRIATE.	Pass / Fail (Sec. 5.6.1)
5	VERIFY that the RESPONSE VALUE for essAvgWindSpeed.0 is greater than or equal to 0.	Pass / Fail (Sec. 5.6.2)
6	VERIFY that the RESPONSE VALUE for essAvgWindSpeed.0 is less than or equal to 65535.	Pass / Fail (Sec. 5.6.2)
7	VERIFY that the RESPONSE VALUE for essAvgWindSpeed.0 is APPROPRIATE.	Pass / Fail (Sec. 5.6.2)

Test Case Results		
Tested By:	***Date Tested:***	***Pass / Fail***
Test Case Notes:		

© 2022 AASHTO / ITE / NEMA

C.2.3.11.3 Version 1 Spot Wind Sensor Data

Test Case: 11.3	***Title:***	*Version 1 Spot Wind Sensor Data*
	Description:	*This test case verifies that the device allows the user to retrieve the version 1 spot wind data.*
	Variables:	
	Pass/Fail Criteria:	*The device under test (DUT) shall pass every verification step included within the Test Case to pass the Test Case.*

Step	***Test Procedure***	***Device***
1	GET the following object(s): »essSpotWindDirection.0 »essSpotWindSpeed.0	Pass / Fail (Sec. 3.5.4.3)
2	VERIFY that the RESPONSE VALUE for essSpotWindDirection.0 is greater than or equal to 0.	Pass / Fail (Sec. 5.6.3)
3	VERIFY that the RESPONSE VALUE for essSpotWindDirection.0 is less than or equal to 361.	Pass / Fail (Sec. 5.6.3)
4	VERIFY that the RESPONSE VALUE for essSpotWindDirection.0 is APPROPRIATE.	Pass / Fail (Sec. 5.6.3)
5	VERIFY that the RESPONSE VALUE for essSpotWindSpeed.0 is greater than or equal to 0.	Pass / Fail (Sec. 5.6.4)
6	VERIFY that the RESPONSE VALUE for essSpotWindSpeed.0 is less than or equal to 65535.	Pass / Fail (Sec. 5.6.4)
7	VERIFY that the RESPONSE VALUE for essSpotWindSpeed.0 is APPROPRIATE.	Pass / Fail (Sec. 5.6.4)

Test Case Results		
Tested By:	***Date Tested:***	***Pass / Fail***
Test Case Notes:		

© 2022 AASHTO / ITE / NEMA

C.2.3.11.4 Version 1 Wind Gust Data

Test Case: 11.4	***Title:***	*Version 1 Wind Gust Data*
	Description:	*This test case verifies that the device allows the user to retrieve the version 1 wind gust data.*
	Variables:	
	Pass/Fail Criteria:	*The device under test (DUT) shall pass every verification step included within the Test Case to pass the Test Case.*

Step	***Test Procedure***	***Device***
1	GET the following object(s): »essMaxWindGustSpeed.0 »essMaxWindGustDir.0	Pass / Fail (Sec. 3.5.4.4)
2	VERIFY that the RESPONSE VALUE for essMaxWindGustSpeed.0 is greater than or equal to 0.	Pass / Fail (Sec. 5.6.6)
3	VERIFY that the RESPONSE VALUE for essMaxWindGustSpeed.0 is less than or equal to 65535.	Pass / Fail (Sec. 5.6.6)
4	VERIFY that the RESPONSE VALUE for essMaxWindGustSpeed.0 is APPROPRIATE.	Pass / Fail (Sec. 5.6.6)
5	VERIFY that the RESPONSE VALUE for essMaxWindGustDir.0 is greater than or equal to 0.	Pass / Fail (Sec. 5.6.7)
6	VERIFY that the RESPONSE VALUE for essMaxWindGustDir.0 is less than or equal to 361.	Pass / Fail (Sec. 5.6.7)
7	VERIFY that the RESPONSE VALUE for essMaxWindGustDir.0 is APPROPRIATE.	Pass / Fail (Sec. 5.6.7)

Test Case Results		
Tested By:	***Date Tested:***	***Pass / Fail***
Test Case Notes:		

© 2022 AASHTO / ITE / NEMA

C.2.3.11.5 Version 1 Wind Situation

Test Case: 11.5	***Title:***	*Version 1 Wind Situation*
	Description:	*This test case verifies that the device allows the user to retrieve the version 1 wind situation.*
	Variables:	
	Pass/Fail Criteria:	*The device under test (DUT) shall pass every verification step included within the Test Case to pass the Test Case.*

Step	***Test Procedure***	***Device***
1	GET the following object(s): »essWindSituation.0	Pass / Fail (Sec. 3.5.4.5)
2	VERIFY that the RESPONSE VALUE for essWindSituation.0 is greater than or equal to 1.	Pass / Fail (Sec. 5.6.5)
3	VERIFY that the RESPONSE VALUE for essWindSituation.0 is less than or equal to 12.	Pass / Fail (Sec. 5.6.5)
4	VERIFY that the RESPONSE VALUE for essWindSituation.0 is APPROPRIATE. Note: Valid enumerated values are defined in NTCIP 1204 v04 Sec. 5.6.5	Pass / Fail (Sec. 5.6.5)

Test Case Results		
Tested By:	***Date Tested:***	***Pass / Fail***
Test Case Notes:		

© 2022 AASHTO / ITE / NEMA

C.2.3.11.6 Version 1 Water Depth

Test Case: 11.6	***Title:***	*Version 1 Water Depth*
	Description:	*This test case verifies that the device allows the user to retrieve the version 1 water depth.*
	Variables:	
	Pass/Fail Criteria:	*The device under test (DUT) shall pass every verification step included within the Test Case to pass the Test Case.*

Step	***Test Procedure***	***Device***
1	GET the following object(s): »essWaterDepth.0	Pass / Fail (Sec. 3.5.4.6)
2	VERIFY that the RESPONSE VALUE for essWaterDepth.0 is greater than or equal to 0.	Pass / Fail (Sec. 5.8.2)
3	VERIFY that the RESPONSE VALUE for essWaterDepth.0 is less than or equal to 65535.	Pass / Fail (Sec. 5.8.2)
4	VERIFY that the RESPONSE VALUE for essWaterDepth.0 is APPROPRIATE.	Pass / Fail (Sec. 5.8.2)

Test Case Results		
Tested By:	***Date Tested:***	***Pass / Fail***
Test Case Notes:		

© 2022 AASHTO / ITE / NEMA

C.2.3.11.7 Version 1 Solar Radiation

Test Case: 11.7	***Title:***	*Version 1 Solar Radiation*
	Description:	*This test case verifies that the device allows the user to retrieve the version 1 solar radiation.*
	Variables:	
	Pass/Fail Criteria:	*The device under test (DUT) shall pass every verification step included within the Test Case to pass the Test Case.*

Step	***Test Procedure***	***Device***
1	GET the following object(s): »essSolarRadiation.0	Pass / Fail (Sec. 3.5.4.7)
2	VERIFY that the RESPONSE VALUE for essSolarRadiation.0 is greater than or equal to 0.	Pass / Fail (Sec. 5.9.1)
3	VERIFY that the RESPONSE VALUE for essSolarRadiation.0 is less than or equal to 65535.	Pass / Fail (Sec. 5.9.1)
4	VERIFY that the RESPONSE VALUE for essSolarRadiation.0 is APPROPRIATE.	Pass / Fail (Sec. 5.9.1)

Test Case Results		
Tested By:	***Date Tested:***	***Pass / Fail***
Test Case Notes:		

© 2022 AASHTO / ITE / NEMA

C.2.3.11.8 Version 1 Surface Water Depth

Test Case: 11.8	***Title:***	*Version 1 Surface Water Depth*	
	Description:	*This test case verifies that the device allows the user to retrieve the version 1 surface water depth.*	
	Variables:	*Required_Pavement_Sensors*	*PRL 3.6.8*
	Pass/Fail Criteria:	*The device under test (DUT) shall pass every verification step included within the Test Case to pass the Test Case.*	

Step	***Test Procedure***	***Device***
1	CONFIGURE: Determine the number of pavement sensors required by the specification (PRL 3.6.8). RECORD this information as: »Required_Pavement_Sensors	
2	FOR EACH value, N, from 1 to Required_Pavement_Sensors, perform Steps 2.1 through 2.4.	
2.1	GET the following object(s): »essSurfaceWaterDepth.N	Pass / Fail (Sec. 3.5.4.8)
2.2	VERIFY that the RESPONSE VALUE for essSurfaceWaterDepth.N is greater than or equal to 0.	Pass / Fail (Sec. 5.11.3.10)
2.3	VERIFY that the RESPONSE VALUE for essSurfaceWaterDepth.N is less than or equal to 255.	Pass / Fail (Sec. 5.11.3.10)
2.4	VERIFY that the RESPONSE VALUE for essSurfaceWaterDepth.N is APPROPRIATE.	Pass / Fail (Sec. 5.11.3.10)

Test Case Results		
Tested By:	***Date Tested:***	***Pass / Fail***
Test Case Notes:		

© 2022 AASHTO / ITE / NEMA

C.2.3.11.9 Version 1 Surface Conductivity

Test Case: 11.9	***Title:***	*Version 1 Surface Conductivity*	
	Description:	*This test case verifies that the device allows the user to retrieve the version 1 surface conductivity.*	
	Variables:	*Required_Pavement_Sensors*	*PRL 3.6.8*
	Pass/Fail Criteria:	*The device under test (DUT) shall pass every verification step included within the Test Case to pass the Test Case.*	

Step	***Test Procedure***	***Device***
1	CONFIGURE: Determine the number of pavement sensors required by the specification (PRL 3.6.8). RECORD this information as: »Required_Pavement_Sensors	
2	FOR EACH value, N, from 1 to Required_Pavement_Sensors, perform Steps 2.1 through 2.4.	
2.1	GET the following object(s): »essSurfaceConductivity.N	Pass / Fail (Sec. 3.5.4.9)
2.2	VERIFY that the RESPONSE VALUE for essSurfaceConductivity.N is greater than or equal to 0.	Pass / Fail (Sec. 5.11.3.12)
2.3	VERIFY that the RESPONSE VALUE for essSurfaceConductivity.N is less than or equal to 65535.	Pass / Fail (Sec. 5.11.3.12)
2.4	VERIFY that the RESPONSE VALUE for essSurfaceConductivity.N is APPROPRIATE.	Pass / Fail (Sec. 5.11.3.12)

Test Case Results		
Tested By:	***Date Tested:***	***Pass / Fail***
Test Case Notes:		

© 2022 AASHTO / ITE / NEMA

C.2.3.11.10 Version 2 Station Meta Data Block

Test Case: 11.10	***Title:***	*Version 2 Station Meta Data Block*
	Description:	*This test case verifies that the device allows the user to retrieve the version 2 Station Meta Data Block.*
	Variables:	*Pressure_Supported* — *PRL 2.5.2.1.1* *Wind_Supported* — *PRL 2.5.2.1.2* *Required_Wind_Sensors* — *PRL 3.6.2* *Temperature_Supported* — *PRL 2.5.2.1.3* *Required_Temp_Sensors* — *PRL 3.6.3* *Pavement_Supported* — *PRL 2.5.2.2* *Required_Pavement_Sensors* — *PRL 3.6.8* *Subsurface_Supported* — *PRL 2.5.2.3* *Required_Subsurface_Sensors* — *PRL 3.6.11* *Pavement_Treatment_Supported* — *PRL 2.5.3* *Required_Pavement_Treatment_Products* — *PRL 3.6.12*
	Pass/Fail Criteria:	*The device under test (DUT) shall pass every verification step included within the Test Case to pass the Test Case.*

Step	***Test Procedure***	***Device***
1	CONFIGURE: Determine whether the ESS is required to monitor atmospheric pressure (PRL 2.5.2.1.1). RECORD this information as: »Pressure_Supported	
2	CONFIGURE: Determine whether the ESS is required to monitor winds (PRL 2.5.2.1.2). RECORD this information as: »Wind_Supported If so, determine how many wind sensors that the ESS is required to support (PRL 3.6.2). RECORD this information as: »Required_Wind_Sensors	
3	CONFIGURE: Determine whether the ESS is required to support temperature sensors (PRL 2.5.2.1.3). RECORD this information as: »Temperature_Supported If so, determine how many temperature sensors that the ESS is required to support (PRL 3.6.3). RECORD this information as: »Required_Temp_Sensors	
4	CONFIGURE: Determine whether the ESS is required to support pavement sensors (PRL 2.5.2.2). RECORD this information as: »Pavement_Supported If so, determine how many pavement sensors that the ESS is required to support (PRL 3.6.8). RECORD this information as: »Required_Pavement_Sensors	
5	CONFIGURE: Determine whether the ESS is required to support subsurface sensors (PRL 2.5.2.3). RECORD this information as: »Subsurface_Supported If so, determine how many subsurface sensors that the ESS is required to support (PRL 3.6.11). RECORD this information as: »Required_Subsurface_Sensors	

© 2022 AASHTO / ITE / NEMA

6	CONFIGURE: Determine whether the ESS is required to provide pavement treatment capabilities (PRL 2.5.3). RECORD this information as: »Pavement_Treatment_Supported If so, determine how many pavement treatment products that the ESS is required to support (PRL 3.6.12). RECORD this information as: »Required_Pavement_Treatment_Products	
7	GET the following object(s): »essStationMetaDataBlock.0	Pass / Fail (Sec. 3.5.4.10)
8	Decode the essStationMetaDataBlock.0 structure.	
9	VERIFY that the essStationMetaDataBlock.0 structure was decoded without error.	Pass / Fail (Sec. 5.3.5)
10	VERIFY that the RESPONSE VALUE for the essNtcipCategory.0 field of the essStationMetaDataBlock.0 object is present.	Pass / Fail (Sec. 5.3.5)
11	VERIFY that the RESPONSE VALUE for the essNtcipCategory.0 field of the essStationMetaDataBlock.0 object is APPROPRIATE. Note: See NTCIP 1204 v04 Sec. 5.2.1 for valid enumerated values.	Pass / Fail (Sec. 5.2.1)
12	VERIFY that the RESPONSE VALUE for the essTypeOfStation.0 field of the essStationMetaDataBlock.0 object is present.	Pass / Fail (Sec. 5.3.5)
13	VERIFY that the RESPONSE VALUE for the essTypeOfStation.0 field of the essStationMetaDataBlock.0 object is APPROPRIATE. Note: See NTCIP 1204 v04 Sec. 5.3.1 for the definition of valid values.	Pass / Fail (Sec. 5.3.1)
14	VERIFY that the RESPONSE VALUE for the essLatitude.0 field of the essStationMetaDataBlock.0 object is present.	Pass / Fail (Sec. 5.3.5)
15	VERIFY that the RESPONSE VALUE for the essLatitude.0 field of the essStationMetaDataBlock.0 object is APPROPRIATE.	Pass / Fail (Sec. 5.4.1)
16	VERIFY that the RESPONSE VALUE for the essLongitude.0 field of the essStationMetaDataBlock.0 object is present.	Pass / Fail (Sec. 5.3.5)
17	VERIFY that the RESPONSE VALUE for the essLongitude.0 field of the essStationMetaDataBlock.0 object is APPROPRIATE.	Pass / Fail (Sec. 5.4.2)
18	VERIFY that the RESPONSE VALUE for the essReferenceHeight.0 field of the essStationMetaDataBlock.0 object is present.	Pass / Fail (Sec. 5.3.5)
19	VERIFY that the RESPONSE VALUE for the essReferenceHeight.0 field of the essStationMetaDataBlock.0 object is APPROPRIATE.	Pass / Fail (Sec. 5.5.1)
20	IF Pressure_Supported is equal to true, then proceed to Step 20.1; otherwise, proceed to Step 21.	
20.1	VERIFY that the RESPONSE VALUE for the essPressureHeight.0 field of the essStationMetaDataBlock.0 object is present.	Pass / Fail (Sec. 5.3.5)
20.2	VERIFY that the RESPONSE VALUE for essPressureHeight.0 is APPROPRIATE.	Pass / Fail (Sec. 5.5.2)
21	IF Wind_Supported is equal to true, then proceed to Step 21.1; otherwise, proceed to Step 22.	

© 2022 AASHTO / ITE / NEMA Copy Per TRF Distribution Permission

21.1	VERIFY that the RESPONSE VALUE for the essWindSensorHeight.0 field of the essStationMetaDataBlock.0 object is present.	Pass / Fail (Sec. 5.3.5)
21.2	VERIFY that the RESPONSE VALUE for essWindSensorHeight.0 is APPROPRIATE.	Pass / Fail (Sec. 5.5.3)
22	IF Temperature_Supported is equal to true, then proceed to Step 22.1; otherwise, proceed to Step 23.	
22.1	VERIFY that the RESPONSE VALUE for the temperatureMetaData field of the essStationMetaDataBlock.0 object is present.	Pass / Fail (Sec. 5.3.5)
22.2	VERIFY that the temperatureMetaData field contains at least Required_Temp_Sensors entries.	Pass / Fail (Sec. 5.3.5)
22.3	FOR EACH value, N, from 1 to Required_Temp_Sensors, perform Steps 22.3.1 through 22.3.4.	
22.3.1	VERIFY that the RESPONSE VALUE for the essTemperatureSensorIndex.0 field is present in the Nth TemperatureMetaData structure.	Pass / Fail (Sec. 5.3.5)
22.3.2	VERIFY that the RESPONSE VALUE for the essTemperatureSensorIndex.0 field in the Nth TemperatureMetaData structure is equal to N.	Pass / Fail (Sec. 5.7.3.1)
22.3.3	VERIFY that the RESPONSE VALUE for the essTemperatureSensorHeight.0 field is present in the Nth TemperatureMetaData structure.	Pass / Fail (Sec. 5.3.5)
22.3.4	VERIFY that the RESPONSE VALUE for essTemperatureSensorHeight.0 field in the Nth TemperatureMetaData structure is APPROPRIATE.	Pass / Fail (Sec. 5.7.3.2)
23	IF Pavement_Supported is equal to true, then proceed to Step 23.1; otherwise, proceed to Step 24.	
23.1	VERIFY that the RESPONSE VALUE for the pavementMetaData field of the essStationMetaDataBlock.0 object is present.	Pass / Fail (Sec. 5.3.5)
23.2	VERIFY that the pavementMetaData field contains at least Required_Pavement_Sensors entries.	Pass / Fail (Sec. 5.3.5)
23.3	FOR EACH value, N, from 1 to Required_Pavement_Sensors, perform Steps 23.3.1 through 23.3.10.	
23.3.1	VERIFY that the RESPONSE VALUE for the essPavementSensorIndex.0 field is present in the Nth PavementMetaData structure.	Pass / Fail (Sec. 5.3.5)
23.3.2	VERIFY that the RESPONSE VALUE for the essPavementSensorIndex.0 field in the Nth PavementMetaData structure is equal to N.	Pass / Fail (Sec. 5.11.3.1)
23.3.3	VERIFY that the RESPONSE VALUE for the essPavementType.0 field is present in the Nth PavementMetaData structure.	Pass / Fail (Sec. 5.3.5)
23.3.4	VERIFY that the RESPONSE VALUE for the essPavementType.0 field in the Nth PavementMetaData structure is APPROPRIATE.	Pass / Fail (Sec. 5. 11.3.3)
23.3.5	VERIFY that the RESPONSE VALUE for the essPavementElevation.0 field is present in the Nth PavementMetaData structure.	Pass / Fail (Sec. 5.3.5)
23.3.6	VERIFY that the RESPONSE VALUE for the essPavementElevation.0 field in the Nth PavementMetaData structure is APPROPRIATE.	Pass / Fail (Sec. 5.11.3.4)
23.3.7	VERIFY that the RESPONSE VALUE for the essPavementExposure.0 field is present in the Nth PavementMetaData structure.	Pass / Fail (Sec. 5.3.5)

Copy Per TRF Distribution Permission
© 2022 AASHTO / ITE / NEMA

23.3.8	VERIFY that the RESPONSE VALUE for the essPavementExposure.0 field in the Nth PavementMetaData structure is APPROPRIATE.	Pass / Fail (Sec. 5.11.3.5)
23.3.9	VERIFY that the RESPONSE VALUE for the essPavementSensorType.0 field is present in the Nth PavementMetaData structure.	Pass / Fail (Sec. 5.3.5)
23.3.10	VERIFY that the RESPONSE VALUE for the essPavementSensorType.0 field in the Nth PavementMetaData structure is APPROPRIATE.	Pass / Fail (Sec. 5.11.3.6)
24	IF Subsurface_Supported is equal to true, then proceed to Step 24.1; otherwise, proceed to Step 25.	
24.1	VERIFY that the RESPONSE VALUE for the SubSurfaceMetaData field of the essStationMetaDataBlock.0 object is present.	Pass / Fail (Sec. 5.3.5)
24.2	VERIFY that the SubSurfaceMetaData field contains at least Required_Subsurface_Sensors entries.	Pass / Fail (Sec. 5.3.5)
24.3	FOR EACH value, N, from 1 to Required_Subsurface_Sensors, perform Steps 24.3.1 through 24.3.6.	
24.3.1	VERIFY that the RESPONSE VALUE for the essSubSurfaceSensorIndex.0 field is present in the Nth SubSurfaceMetaData structure.	Pass / Fail (Sec. 5.3.5)
24.3.2	VERIFY that the RESPONSE VALUE for the essSubSurfaceSensorIndex.0 field in the Nth SubSurfaceMetaData structure is equal to N.	Pass / Fail (Sec. 5.11.6.1)
24.3.3	VERIFY that the RESPONSE VALUE for the essSubSurfaceType.0 field is present in the Nth SubSurfaceMetaData structure.	Pass / Fail (Sec. 5.3.5)
24.3.4	VERIFY that the RESPONSE VALUE for the essSubSurfaceType.0 field in the Nth SubSurfaceMetaData structure is APPROPRIATE.	Pass / Fail (Sec. 5.11.6.3)
24.3.5	VERIFY that the RESPONSE VALUE for the essSubSurfaceSensorDepth.0 field is present in the Nth SubSurfaceMetaData structure.	Pass / Fail (Sec. 5.3.5)
24.3.6	VERIFY that the RESPONSE VALUE for the essSubSurfaceSensorDepth.0 field in the Nth SubSurfaceMetaData structure is APPROPRIATE.	Pass / Fail (Sec. 5.11.6.4)
25	IF Pavement_Treatment_Supported is equal to true, then proceed to Step 25.1; otherwise, proceed to EXIT.	
25.1	VERIFY that the RESPONSE VALUE for the treatmentMetaData field of the essStationMetaDataBlock.0 object is present.	Pass / Fail (Sec. 5.3.5)
25.2	VERIFY that the treatmentMetaData field contains at least Required_Pavement_Treatment_Products entries.	Pass / Fail (Sec. 5.3.5)
25.3	FOR EACH value, N, from 1 to Required_Pavement_Treatment_Products, perform Steps 25.3.1 through 25.3.11.	
25.3.1	VERIFY that the RESPONSE VALUE for the essPavementTreatmentIndex.0 field is present in the Nth TreatmentMetaData structure.	Pass / Fail (Sec. 5.3.5)
25.3.2	VERIFY that the RESPONSE VALUE for the essPavementTreatmentIndex.0 field in the Nth TreatmentMetaData structure is equal to N.	Pass / Fail (Sec. 5.13.3.1)
25.3.3	VERIFY that the RESPONSE VALUE for the essPaveTreatProductType.0 field is present in the Nth TreatmentMetaData structure.	Pass / Fail (Sec. 5.3.5)
25.3.4	VERIFY that the RESPONSE VALUE for the essPaveTreatProductType.0 field in the Nth TreatmentMetaData structure is between 1 and 14, inclusive.	Pass / Fail (Sec. 5.13.3.2)

© 2022 AASHTO / ITE / NEMA

25.3.5	VERIFY that the RESPONSE VALUE for the essPaveTreatProductType.0 field in the Nth SubSurfaceMetaData structure is APPROPRIATE.	Pass / Fail (Sec. 5.13.3.2)
25.3.6	VERIFY that the RESPONSE VALUE for the essPaveTreatProductForm.0 field is present in the Nth TreatmentMetaData structure.	Pass / Fail (Sec. 5.3.5)
25.3.7	VERIFY that the RESPONSE VALUE for the essPaveTreatProductForm.0 field in the Nth TreatmentMetaData structure is between 1 and 4, inclusive.	Pass / Fail (Sec. 5.13.3.3)
25.3.8	VERIFY that the RESPONSE VALUE for the essPaveTreatProductForm.0 field in the Nth SubSurfaceMetaData structure is APPROPRIATE.	Pass / Fail (Sec. 5.13.3.3)
25.3.9	VERIFY that the RESPONSE VALUE for the essPercentProductMix.0 field is present in the Nth TreatmentMetaData structure.	Pass / Fail (Sec. 5.3.5)
25.3.10	VERIFY that the RESPONSE VALUE for the essPercentProductMix.0 field in the Nth TreatmentMetaData structure is between 0 and 100, inclusive.	Pass / Fail (Sec. 5.13.3.4)
25.3.11	VERIFY that the RESPONSE VALUE for the essPercentProductMix.0 field in the Nth SubSurfaceMetaData structure is APPROPRIATE.	Pass / Fail (Sec. 5.13.3.4)

Test Case Results		
Tested By:	***Date Tested:***	***Pass / Fail***
Test Case Notes:		

© 2022 AASHTO / ITE / NEMA

C.2.3.11.11 Version 2 Weather Block

Test Case: 11.11	***Title:***	*Version 2 Weather Block*
	Description:	*This test case verifies that the device allows the user to retrieve the version 2 Weather Data Block Object.*
	Variables:	*Pressure_Supported* — *PRL 2.5.2.1.1* *Wind_Supported* — *PRL 2.5.2.1.2* *Required_Wind_Sensors* — *PRL 3.6.2* *Temperature_Supported* — *PRL 2.5.2.1.3* *Required_Temp_Sensors* — *PRL 3.6.3* *Precip_Supported* — *PRL 2.5.2.1.5* *Required_Water_Level_Sensors* — *PRL 3.6.22* *Situation_Supported* — *PRL 2.5.2.4* *Visibility_Supported* — *PRL 2.5.2.1.7*
	Pass/Fail Criteria:	*The device under test (DUT) shall pass every verification step included within the Test Case to pass the Test Case.*

Step	***Test Procedure***	***Device***
1	CONFIGURE: Determine whether the ESS is required to monitor atmospheric pressure (PRL 2.5.2.1.1). RECORD this information as: »Pressure_Supported	
2	CONFIGURE: Determine . RECORD this information as: »Wind_Supported (whether the ESS is required to monitor winds—PRL 2.5.2.1.2) »Required_Wind_Sensors (the number of wind sensors that the ESS is required to support—PRL 3.6.2)	
3	CONFIGURE: Determine . RECORD this information as: »Temperature_Supported (whether the ESS is required to monitor temperature - PRL 2.5.2.1.3) »Required_Temp_Sensors (the number of temperature sensors that the ESS is required to support—PRL 3.6.3)	
4	CONFIGURE: Determine . RECORD this information as: »Precip_Supported (whether the ESS is required to monitor precipitation—PRL 2.5.2.1.5) »Required_Water_Level_Sensors (the number of water level sensors that the ESS is required to support—PRL 3.6.22)	
5	CONFIGURE: Determine whether the ESS is required to report situation data (PRL 2.5.2.4). RECORD this information as: »Situation_Supported	
6	CONFIGURE: Determine whether the ESS is required to provide visibility capabilities (PRL 2.5.2.1.7). RECORD this information as: »Visibility_Supported	
7	GET the following object(s): »essWeatherBlock.0	Pass / Fail (Sec. 3.5.4.11)
8	Decode the essWeatherBlock.0 structure.	
9	VERIFY that the essWeatherBlock.0 structure was decoded without error.	Pass / Fail (Sec. 5.3.6)
10	IF Pressure_Supported is equal to true, then proceed to Step 10.1; otherwise, proceed to Step 11.	

© 2022 AASHTO / ITE / NEMA Copy Per TRF Distribution Permission

10.1	VERIFY that the RESPONSE VALUE for the essAtmosphericPressure.0 field of the essWeatherBlock.0 object is present.	Pass / Fail (Sec. 5.5.4)
10.2	VERIFY that the RESPONSE VALUE for essAtmosphericPressure.0 is between 0 and 65535, inclusive.	Pass / Fail (Sec. 5.5.4)
10.3	VERIFY that the RESPONSE VALUE for essAtmosphericPressure.0 is APPROPRIATE.	Pass / Fail (Sec. 5.5.4)
11	IF Wind_Supported is equal to true, then proceed to Step 11.1; otherwise, proceed to Step 12.	
11.1	VERIFY that the RESPONSE VALUE for the essWindData field of the essWeatherBlock.0 object is present.	Pass / Fail (Sec. 5.3.6)
11.2	VERIFY that the essAvgWindDirection.0 field is present in the essWindData structure.	Pass / Fail (Sec. 5.3.6)
11.3	VERIFY that the RESPONSE VALUE for essAvgWindDirection.0 is between 0 and 361, inclusive.	Pass / Fail (Sec. 5.6.1)
11.4	VERIFY that the RESPONSE VALUE for essAvgWindDirection.0 is APPROPRIATE.	Pass / Fail (Sec. 5.6.1)
11.5	VERIFY that the essAvgWindSpeed.0 field is present in the essWindData structure.	Pass / Fail (Sec. 5.6.2)
11.6	VERIFY that the RESPONSE VALUE for essAvgWindSpeed.0 is between 0 and 65535, inclusive.	Pass / Fail (Sec. 5.6.2)
11.7	VERIFY that the RESPONSE VALUE for essAvgWindSpeed.0 is APPROPRIATE.	Pass / Fail (Sec. 5.6.2)
11.8	VERIFY that the essMaxWindGustSpeed.0 field is present in the essWindData structure.	Pass / Fail (Sec. 5.6.6)
11.9	VERIFY that the RESPONSE VALUE for essMaxWindGustSpeed.0 is between 0 and 65535, inclusive.	Pass / Fail (Sec. 5.6.6)
11.10	VERIFY that the RESPONSE VALUE for essMaxWindGustSpeed.0 is APPROPRIATE.	Pass / Fail (Sec. 5.6.6)
11.11	VERIFY that the essMaxWindGustDir.0 field is present in the essWindData structure.	Pass / Fail (Sec. 5.6.7)
11.12	VERIFY that the RESPONSE VALUE for essMaxWindGustDir.0 is between 0 and 361, inclusive.	Pass / Fail (Sec. 5.6.7)
11.13	VERIFY that the RESPONSE VALUE for essMaxWindGustDir.0 is APPROPRIATE.	Pass / Fail (Sec. 5.6.7)
11.14	VERIFY that the essSpotWindDirection.0 field is present in the essWindData structure.	Pass / Fail (Sec. 5.3.6)
11.15	VERIFY that the RESPONSE VALUE for essSpotWindDirection.0 is between 0 and 361, inclusive.	Pass / Fail (Sec. 5.6.3)
11.16	VERIFY that the RESPONSE VALUE for essSpotWindDirection.0 is APPROPRIATE.	Pass / Fail (Sec. 5.6.3)
11.17	VERIFY that the essSpotWindSpeed.0 field is present in the essWindData structure.	Pass / Fail (Sec. 5.6.4)

© 2022 AASHTO / ITE / NEMA

11.18	VERIFY that the RESPONSE VALUE for essSpotWindSpeed.0 is between 0 and 65535, inclusive.	Pass / Fail (Sec. 5.6.4)
11.19	VERIFY that the RESPONSE VALUE for essSpotWindSpeed.0 is APPROPRIATE.	Pass / Fail (Sec. 5.6.4)
11.20	IF Situation_Supported is equal to true, then proceed to Step 11.20.1; otherwise, proceed to Step 12.	
11.20.1	VERIFY that the essWindSituation.0 field is present in the essWindData structure.	Pass / Fail (Sec. 5.6.5)
11.20.2	VERIFY that the RESPONSE VALUE for essWindSituation.0 is between 1 and 12, inclusive.	Pass / Fail (Sec. 5.6.5)
11.20.3	VERIFY that the RESPONSE VALUE for essWindSituation.0 is APPROPRIATE.	Pass / Fail (Sec. 5.6.5)
12	IF Temperature_Supported is equal to true, then proceed to Step 12.1; otherwise, proceed to Step 13.	
12.1	VERIFY that the essTemperatureData field of the essWeatherBlock object is present.	Pass / Fail (Sec. 5.3.6)
12.2	VERIFY that the RESPONSE VALUE for the essWetBulbTemp.0 field of the essTemperatureData field is present.	Pass / Fail (Sec. 5.7.4)
12.3	VERIFY that the RESPONSE VALUE for essWetBulbTemp.0 is between -1000 and 1001, inclusive.	Pass / Fail (Sec. 5.7.4)
12.4	VERIFY that the RESPONSE VALUE for essWetBulbTemp.0 is APPROPRIATE.	Pass / Fail (Sec. 5.7.4)
12.5	VERIFY that the RESPONSE VALUE for the essDewpointTemp.0 field of the essTemperatureData field is present.	Pass / Fail (Sec. 5.7.5)
12.6	VERIFY that the RESPONSE VALUE for essDewpointTemp.0 is between -1000 and 1001, inclusive.	Pass / Fail (Sec. 5.7.5)
12.7	VERIFY that the RESPONSE VALUE for essDewpointTemp.0 is APPROPRIATE.	Pass / Fail (Sec. 5.7.5)
12.8	VERIFY that the RESPONSE VALUE for the essMaxTemp.0 field of the essTemperatureData field is present.	Pass / Fail (Sec. 5.7.6)
12.9	VERIFY that the RESPONSE VALUE for essMaxTemp.0 is between -1000 and 1001, inclusive.	Pass / Fail (Sec. 5.7.6)
12.10	VERIFY that the RESPONSE VALUE for essMaxTemp.0 is APPROPRIATE.	Pass / Fail (Sec. 5.7.6)
12.11	Determine the maximum temperature reading reported by the device. RECORD this information as: »Max_Temp	
12.12	VERIFY that the RESPONSE VALUE for the essMinTemp.0 field of the essTemperatureData field is present.	Pass / Fail (Sec. 5.3.6)
12.13	VERIFY that the RESPONSE VALUE for essMinTemp.0 is between -1000 and Max_Temp, inclusive.	Pass / Fail (Sec. 5.7.7)

© 2022 AASHTO / ITE / NEMA Copy Per TRF Distribution Permission

12.14	VERIFY that the RESPONSE VALUE for essMinTemp.0 is APPROPRIATE.	Pass / Fail (Sec. 5.7.7)
12.15	VERIFY that the RESPONSE VALUE for the essRelativeHumidity.0 field of the essTemperatureData field is present.	Pass / Fail (Sec. 5.3.6)
12.16	VERIFY that the RESPONSE VALUE for essRelativeHumidity.0 is between 0 and 101, inclusive.	Pass / Fail (Sec. 5.8.1)
12.17	VERIFY that the RESPONSE VALUE for essRelativeHumidity.0 is APPROPRIATE.	Pass / Fail (Sec. 5.8.1)
12.18	VERIFY that the temperatureTable field contains at least Required_Temp_Sensors entries.	Pass / Fail (Sec. 5.3.6)
12.19	FOR EACH value, N, from 1 to Required_Temp_Sensors, perform Steps 12.19.1 through 12.19.5.	
12.19.1	VERIFY that the RESPONSE VALUE for the essTemperatureSensorIndex.x field is present in the Nth Temperature structure.	Pass / Fail (Sec. 5.3.6)
12.19.2	VERIFY that the RESPONSE VALUE for the essTemperatureSensorIndex.x field in the Nth Temperature structure is equal to N.	Pass / Fail (Sec. 5.7.3.1)
12.19.3	VERIFY that the RESPONSE VALUE for the essAirTemperature.x field is present in the Nth Temperature structure.	Pass / Fail (Sec. 5.7.3.3)
12.19.4	VERIFY that the RESPONSE VALUE for essAirTemperature.x field in the Nth Temperature structure is between -1000 and 1001, inclusive.	Pass / Fail (Sec. 5.7.3.3)
12.19.5	VERIFY that the RESPONSE VALUE for essAirTemperature.x is APPROPRIATE.	Pass / Fail (Sec. 5.7.3.3)
13	IF Precip_Supported is equal to true, then proceed to Step 13.1; otherwise, proceed to Step 14.	
13.1	VERIFY that the RESPONSE VALUE for the essPrecipData field of the essWeatherBlock.0 object is present.	Pass / Fail (Sec. 5.3.6)
13.2	VERIFY that the RESPONSE VALUE for the essWaterDepth.0 field of the essPrecipData field is present.	Pass / Fail (Sec. 5.8.2)
13.3	VERIFY that the RESPONSE VALUE for essWaterDepth.0 is between 0 and 65535, inclusive.	Pass / Fail (Sec. 5.8.2)
13.4	VERIFY that the RESPONSE VALUE for essWaterDepth.0 is APPROPRIATE.	Pass / Fail (Sec. 5.8.2)
13.5	VERIFY that the RESPONSE VALUE for the essAdjacentSnowDepth.0 field of the essPrecipData field is present.	Pass / Fail (Sec. 5.3.6)
13.6	VERIFY that the RESPONSE VALUE for essAdjacentSnowDepth.0 is between 0 and 3001, inclusive.	Pass / Fail (Sec. 5.8.3)
13.7	VERIFY that the RESPONSE VALUE for essAdjacentSnowDepth.0 is APPROPRIATE.	Pass / Fail (Sec. 5.8.3)
13.8	VERIFY that the RESPONSE VALUE for the essRoadwaySnowDepth.0 field of the essPrecipData field is present.	Pass / Fail (Sec. 5.8.4)
13.9	VERIFY that the RESPONSE VALUE for essRoadwaySnowDepth.0 is between 0 and 3001, inclusive.	Pass / Fail (Sec. 5.8.4)

© 2022 AASHTO / ITE / NEMA

13.10	VERIFY that the RESPONSE VALUE for essRoadwaySnowDepth.0 is APPROPRIATE.	Pass / Fail (Sec. 5.8.4)
13.11	VERIFY that the RESPONSE VALUE for the essRoadwaySnowPackDepth.0 field of the essPrecipData field is present.	Pass / Fail (Sec. 5.3.6)
13.12	VERIFY that the RESPONSE VALUE for essRoadwaySnowPackDepth.0 is between 0 and 3001, inclusive.	Pass / Fail (Sec. 5.8.5)
13.13	VERIFY that the RESPONSE VALUE for essRoadwaySnowPackDepth.0 is APPROPRIATE.	Pass / Fail (Sec. 5.8.5)
13.14	VERIFY that the RESPONSE VALUE for the essPrecipYesNo.0 field of the essPrecipData field is present.	Pass / Fail (Sec. 5.3.6)
13.15	VERIFY that the RESPONSE VALUE for essPrecipYesNo.0 is between 1 and 3, inclusive.	Pass / Fail (Sec. 5.8.6)
13.16	VERIFY that the RESPONSE VALUE for essPrecipYesNo.0 is APPROPRIATE.	Pass / Fail (Sec. 5.8.6)
13.17	VERIFY that the RESPONSE VALUE for the essPrecipRate.0 field of the essPrecipData field is present.	Pass / Fail (Sec. 5.3.6)
13.18	VERIFY that the RESPONSE VALUE for essPrecipRate.0 is between 0 and 65535, inclusive.	Pass / Fail (Sec. 5.8.7)
13.19	VERIFY that the RESPONSE VALUE for essPrecipRate.0 is APPROPRIATE.	Pass / Fail (Sec. 5.8.7)
13.20	VERIFY that the RESPONSE VALUE for the essSnowfallAccumRate.0 field of the essPrecipData field is present.	Pass / Fail (Sec. 5.3.6)
13.21	VERIFY that the RESPONSE VALUE for essSnowfallAccumRate.0 is between 0 and 65535, inclusive.	Pass / Fail (Sec. 5.8.8)
13.22	VERIFY that the RESPONSE VALUE for essSnowfallAccumRate.0 is APPROPRIATE.	Pass / Fail (Sec. 5.8.8)
13.23	IF Situation_Supported is equal to true, then proceed to Step 13.23.1; otherwise, proceed to Step 13.24.	
13.23.1	VERIFY that the RESPONSE VALUE for the essPrecipSituation.0 field of the essPrecipData field is present.	Pass / Fail (Sec. 5.3.6)
13.23.2	VERIFY that the RESPONSE VALUE for essPrecipSituation.0 is between 1 and 15, inclusive.	Pass / Fail (Sec. 5.8.9)
13.23.3	VERIFY that the RESPONSE VALUE for essPrecipSituation.0 is APPROPRIATE.	Pass / Fail (Sec. 5.8.9)
13.24	VERIFY that the RESPONSE VALUE for the essIceThickness.0 field of the essPrecipData field is present.	Pass / Fail (Sec. 5.3.6)
13.25	VERIFY that the RESPONSE VALUE for essIceThickness.0 is between 0 and 65535, inclusive.	Pass / Fail (Sec. 5.8.10)
13.26	VERIFY that the RESPONSE VALUE for essIceThickness.0 is APPROPRIATE.	Pass / Fail (Sec. 5.8.10)
13.27	VERIFY that the RESPONSE VALUE for the essPrecipitationStartTime.0 field of the essPrecipData field is present.	Pass / Fail (Sec. 5.3.6)

© 2022 AASHTO / ITE / NEMA

13.28	VERIFY that the RESPONSE VALUE for essPrecipitationStartTime.0 is between 0 and 4294967295, inclusive.	Pass / Fail (Sec. 5.8.11)
13.29	VERIFY that the RESPONSE VALUE for essPrecipitationStartTime.0 is APPROPRIATE.	Pass / Fail (Sec. 5.8.11)
13.30	VERIFY that the RESPONSE VALUE for the essPrecipitationEndTime.0 field of the essPrecipData field is present.	Pass / Fail (Sec. 5.3.6)
13.31	VERIFY that the RESPONSE VALUE for essPrecipitationEndTime.0 is between 0 and 4294967295, inclusive.	Pass / Fail (Sec. 5.8.12)
13.32	VERIFY that the RESPONSE VALUE for essPrecipitationEndTime.0 is APPROPRIATE.	Pass / Fail (Sec. 5.8.12)
14	IF Visibility_Supported is equal to true, then proceed to Step 14.1; otherwise, proceed to EXIT.	
14.1	VERIFY that the RESPONSE VALUE for the essVisibilityData field of the essWeatherBlock.0 object is present.	Pass / Fail (Sec. 5.3.6)
14.2	VERIFY that the RESPONSE VALUE for the essSolarRadiation.0 field of the essVisibilityData field is present.	Pass / Fail (Sec. 5.3.6)
14.3	VERIFY that the RESPONSE VALUE for essSolarRadiation.0 is between -2048 and 2049, inclusive.	Pass / Fail (Sec. 5.9.1)
14.4	VERIFY that the RESPONSE VALUE for essSolarRadiation.0 is APPROPRIATE.	Pass / Fail (Sec. 5.9.1)
14.5	VERIFY that the RESPONSE VALUE for the essTotalSun.0 field of the essVisibilityData field is present.	Pass / Fail (Sec. 5.3.6)
14.6	VERIFY that the RESPONSE VALUE for essTotalSun.0 is between 0 and 1441, inclusive.	Pass / Fail (Sec. 5.9.2)
14.7	VERIFY that the RESPONSE VALUE for essTotalSun.0 is APPROPRIATE.	Pass / Fail (Sec. 5.9.2)
14.8	VERIFY that the RESPONSE VALUE for the essVisibility.0 field of the essVisibilityData field is present.	Pass / Fail (Sec. 5.3.6)
14.9	VERIFY that the RESPONSE VALUE for essVisibility.0 is between 0 and 1000001, inclusive.	Pass / Fail (Sec. 5.10.1)
14.10	VERIFY that the RESPONSE VALUE for essVisibility.0 is APPROPRIATE.	Pass / Fail (Sec. 5.10.1)
14.11	IF Situation_Supported is equal to true, then proceed to Step 14.11.1; otherwise, proceed to EXIT.	
14.11.1	VERIFY that the RESPONSE VALUE for the essCloudSituation.0 field of the essVisibilityData field is present.	Pass / Fail (Sec. 5.3.6)
14.11.2	VERIFY that the RESPONSE VALUE for essCloudSituation.0 is between 1 and 5, inclusive.	Pass / Fail (Sec. 5.9.3)
14.11.3	VERIFY that the RESPONSE VALUE for essCloudSituation.0 is APPROPRIATE.	Pass / Fail (Sec. 5.9.3)
14.11.4	VERIFY that the RESPONSE VALUE for the essVisibilitySituation.0 field of the essVisibilityData field is present.	Pass / Fail (Sec. 5.3.6)

© 2022 AASHTO / ITE / NEMA

14.11.5	VERIFY that the RESPONSE VALUE for essVisibilitySituation.0 is between 1 and 12, inclusive.	Pass / Fail (Sec. 5.10.2)
14.11.6	VERIFY that the RESPONSE VALUE for essVisibilitySituation.0 is APPROPRIATE.	Pass / Fail (Sec. 5.10.2)

Test Case Results		
Tested By:	***Date Tested:***	***Pass / Fail***
Test Case Notes:		

© 2022 AASHTO / ITE / NEMA

C.2.3.11.12 Version 2 Pavement Block

Test Case: 11.12	***Title:***	*Version 2 Pavement Block*
	Description:	*This test case verifies that the device allows the user to retrieve the version 2 Pavement Block Object.*
	Variables:	*Required_Pavement_Sensors* — *PRL 3.6.8* *Support_Icing* — *PRL 2.5.2.2.2*
	Pass/Fail Criteria:	*The device under test (DUT) shall pass every verification step included within the Test Case to pass the Test Case.*

Step	***Test Procedure***	***Device***
1	CONFIGURE: Determine the number of pavement sensors required by the specification (PRL 3.6.8). RECORD this information as: »Required_Pavement_Sensors	
2	CONFIGURE: Determine whether the ESS is required to support icing detection per the specification (PRL 2.5.2.2.2). RECORD this information as: »Support_Icing	
3	GET the following object(s): »essPavementBlock.0	Pass / Fail (Sec. 3.5.4.12)
4	Decode the essPavementBlock.0 structure.	
5	VERIFY that the EssPavementData structure contains at least Required_Pavement_Sensors entries.	Pass / Fail (Sec. 5.11.7)
6	FOR EACH value, N, from 1 to Required_Pavement_Sensors, perform Steps 6.1 through 6.12.	
6.1	VERIFY that the RESPONSE VALUE for the essPavementSensorIndex.x field of the essPavementBlock.0 object is present.	Pass / Fail (Sec. 5.11.7)
6.2	VERIFY that the RESPONSE VALUE for essPavementSensorIndex.x is equal to N.	Pass / Fail (Sec. 5.11.3.17)
6.3	VERIFY that the RESPONSE VALUE for the essSurfaceStatus.x field of the essPavementBlock.0 object is present.	Pass / Fail (Sec. 5.11.7)
6.4	VERIFY that the RESPONSE VALUE for essSurfaceStatus.x is between 1 and 14, inclusive.	Pass / Fail (Sec. 5.11.3.7)
6.5	VERIFY that the RESPONSE VALUE for essSurfaceStatus.x is APPROPRIATE.	Pass / Fail (Sec. 5.11.3.7)
6.6	VERIFY that the RESPONSE VALUE for the essSurfaceTemperature.x field of the essPavementBlock.0 object is present.	Pass / Fail (Sec. 5.11.7)
6.7	VERIFY that the RESPONSE VALUE for essSurfaceTemperature.x is between -1000 and 1001, inclusive.	Pass / Fail (Sec. 5.11.73.8)
6.8	VERIFY that the RESPONSE VALUE for essSurfaceTemperature.x is APPROPRIATE.	Pass / Fail (Sec. 5.11.3.8)
6.9	IF Support_Icing is equal to true, then proceed to Step 6.9.1; otherwise, proceed to Step 6.10.	
6.9.1	VERIFY that the RESPONSE VALUE for the essPavementTemperature.x field of the essPavementBlock.0 object is present.	Pass / Fail (Sec. 5.11.7)

Copy Per TRF Distribution Permission © 2022 AASHTO / ITE / NEMA

6.9.2	VERIFY that the RESPONSE VALUE for essPavementTemperature.x is between -1000 and 1001, inclusive.	Pass / Fail (Sec. 5.11.3.97)
6.9.3	VERIFY that the RESPONSE VALUE for essPavementTemperature.x is APPROPRIATE.	Pass / Fail (Sec. 5.11.3.9)
6.9.4	VERIFY that the RESPONSE VALUE for the essSurfaceFreezePoint.x field of the essPavementBlock.0 object is present.	Pass / Fail (Sec. 5.11.7)
6.9.5	VERIFY that the RESPONSE VALUE for essSurfaceFreezePoint.x is between -1000 and 1001, inclusive.	Pass / Fail (Sec. 5.11.73.13)
6.9.6	VERIFY that the RESPONSE VALUE for essSurfaceFreezePoint.x is APPROPRIATE.	Pass / Fail (Sec. 5.11.3.13)
6.9.7	VERIFY that the RESPONSE VALUE for the essSurfaceBlackIceSignal.x field of the essPavementBlock.0 object is present.	Pass / Fail (Sec. 5.11.7)
6.9.8	VERIFY that the RESPONSE VALUE for essSurfaceBlackIceSignal.x is between 1 and 4, inclusive.	Pass / Fail (Sec. 5.11.3.147)
6.9.9	VERIFY that the RESPONSE VALUE for essSurfaceBlackIceSignal.x is APPROPRIATE.	Pass / Fail (Sec. 5.11.3.14)
6.9.10	VERIFY that the RESPONSE VALUE for the essSurfaceWaterDepth.x field of the essPavementBlock.0 object is present.	Pass / Fail (Sec. 5.11.7)
6.9.11	VERIFY that the RESPONSE VALUE for essSurfaceWaterDepth.x is between 0 and 255, inclusive.	Pass / Fail (Sec. 5.11.3.167)
6.9.12	VERIFY that the RESPONSE VALUE for essSurfaceWaterDepth.x is APPROPRIATE.	Pass / Fail (Sec. 5.11.3.16)
6.9.13	GET the following object(s): »essPavementSensorType.N	Pass / Fail (Sec. RFC 1157)
6.9.14	IF the RESPONSE VALUE for essPavementSensorType.Subject_Pavement_Sensor is equal to contactPassive, then proceed to Step 6.9.14.1; otherwise, proceed to Step 6.10.	
6.9.14.1	VERIFY that the RESPONSE VALUE for the essSurfaceSalinity.x field of the essPavementBlock.0 object is present.	Pass / Fail (Sec. 5.11.7)
6.9.14.2	VERIFY that the RESPONSE VALUE for essSurfaceSalinity.x is between 0 and 65535, inclusive.	Pass / Fail (Sec. 5.11.3.117)
6.9.14.3	VERIFY that the RESPONSE VALUE for essSurfaceSalinity.x is APPROPRIATE.	Pass / Fail (Sec. 5.11.3.11)
6.9.14.4	VERIFY that the RESPONSE VALUE for the essSurfaceConductivity.x field of the essPavementBlock.0 object is present.	Pass / Fail (Sec. 5.11.7)
6.9.14.5	VERIFY that the RESPONSE VALUE for essSurfaceConductivity.x is between 0 and 65535, inclusive.	Pass / Fail (Sec. 5.11.3.127)
6.9.14.6	VERIFY that the RESPONSE VALUE for essSurfaceConductivity.x is APPROPRIATE.	Pass / Fail (Sec. 5.11.3.12)
6.10	VERIFY that the RESPONSE VALUE for the essPavementSensorError.x field of the essPavementBlock.0 object is present.	Pass / Fail (Sec. 5.11.7)

© 2022 AASHTO / ITE / NEMA Copy Per TRF Distribution Permission

6.11	VERIFY that the RESPONSE VALUE for essPavementSensorError.x is between 1 and 6, inclusive.	Pass / Fail (Sec. 5.11.3.157)
6.12	VERIFY that the RESPONSE VALUE for essPavementSensorError.x is APPROPRIATE.	Pass / Fail (Sec. 5.11.3.15)

Test Case Results		
Tested By:	***Date Tested:***	***Pass / Fail***
Test Case Notes:		

© 2022 AASHTO / ITE / NEMA

C.2.3.11.13 Version 3 Monitor External Port Information

Test Case: 11.13	***Title:***	*Monitor External Port Information (Version 03)*	
	Description:	*This test case verifies that the device allows the user to retrieve information about the device's external port(s).*	
	Variables:	*Required_Ports*	*F.2.3.2*
	Pass/Fail Criteria:	*The device under test (DUT) shall pass every verification step included within the Test Case to pass the Test Case.*	

Step	***Test Procedure***	***Device***
1	CONFIGURE: Determine the number of external analog ports required by the specification (F.2.3.2). RECORD this information as: »Required_Ports	
2	GET the following object(s): »auxIOTableNumAnalogPorts.0 VERIFY that there is no response.	Pass / Fail (Sec. F.2.2.1.6)
3	Determine the RESPONSE VALUE for auxIOTableNumAnalogPorts.0. RECORD this information as: »Num_Ports	
4	FOR EACH value, N, from 1 to Num_Ports, perform Steps 4.1 through 4.17.	
4.1	GET the following object(s): »auxIOPortType.N »auxIOPortNumber.N »auxIOPortDescription.N »auxIOPortResolution.N »auxIOPortDirection.N	Pass / Fail (Sec. F.2.2.1.6)
4.2	VERIFY that the RESPONSE VALUE for auxIOPortType.N is equal to 2.	Pass / Fail (NTCIP 1201 v02 Sec. 2.8.3.1)
4.3	VERIFY that the RESPONSE VALUE for auxIOPortNumber.N is equal to N.	Pass / Fail (NTCIP 1201 v02 Sec. 2.8.3.2)
4.4	VERIFY that the RESPONSE VALUE for auxIOPortDescription.N is no more than 255 characters and contains only DisplayString characters.	Pass / Fail (NTCIP 1201 v02 Sec. 2.8.3.3)
4.5	VERIFY that the RESPONSE VALUE for auxIOPortDescription.N is APPROPRIATE.	Pass / Fail (NTCIP 1201 v02 Sec. 2.8.3.3)
4.6	VERIFY that the RESPONSE VALUE for auxIOPortResolution.N is greater than or equal to 1.	Pass / Fail (NTCIP 1201 v02 Sec. 2.8.3.4)
4.7	VERIFY that the RESPONSE VALUE for auxIOPortResolution.N is less than or equal to 32.	Pass / Fail (NTCIP 1201 v02 Sec. 2.8.3.4)
4.8	VERIFY that the RESPONSE VALUE for auxIOPortResolution.N is APPROPRIATE.	Pass / Fail (NTCIP 1201 v02 Sec. 2.8.3.4)

© 2022 AASHTO / ITE / NEMA Copy Per TRF Distribution Permission

4.9	Determine the RESPONSE VALUE for auxIOPortResolution.N. RECORD this information as: »Resolution	
4.10	VERIFY that the RESPONSE VALUE for auxIOPortDirection.N is greater than or equal to 1.	Pass / Fail (NTCIP 1201 v02 Sec. 2.8.3.6)
4.11	VERIFY that the RESPONSE VALUE for auxIOPortDirection.N is less than or equal to 3.	Pass / Fail (NTCIP 1201 v02 Sec. 2.8.3.6)
4.12	VERIFY that the RESPONSE VALUE for auxIOPortDirection.N is APPROPRIATE.	Pass / Fail (NTCIP 1201 v02 Sec. 2.8.3.6)
4.13	GET the following object(s): »auxIOPortValue.N »auxIOPortLastCommandedState.N	Pass / Fail (Sec. F.2.2.2.1)
4.14	VERIFY that the RESPONSE VALUE for auxIOPortValue.N is greater than 0 and less than the port's maximum value as defined by auxIOPortResolution.N (i.e., (2^Resolution) - 1).	Pass / Fail (NTCIP 1201 v02 Sec. 2.8.3.5)
4.15	VERIFY that the RESPONSE VALUE for auxIOPortValue.N is APPROPRIATE.	Pass / Fail (NTCIP 1201 v02 Sec. 2.8.3.5)
4.16	VERIFY that the RESPONSE VALUE for auxIOPortLastCommandedState.N is greater than 0 and less than the port's maximum value as defined by auxIOPortResolution.N (i.e., (2^Resolution) - 1).	Pass / Fail (NTCIP 1201 v02 Sec. 2.8.3.7)
4.17	VERIFY that the RESPONSE VALUE for auxIOPortLastCommandedState.N is APPROPRIATE.	Pass / Fail (NTCIP 1201 v02 Sec. 2.8.3.7)

Test Case Results		
Tested By:	***Date Tested:***	***Pass / Fail***
Test Case Notes:		

© 2022 AASHTO / ITE / NEMA

C.2.3.11.14 Version 3 Configure External Port

Test Case: 11.14	***Title:***	*Configure External Port (Version 03)*
	Description:	*This test case verifies that the device allows the user to configure the external port.*
	Variables:	*Required_Ports* — *F.2.3.2*
	Pass/Fail Criteria:	*The device under test (DUT) shall pass every verification step included within the Test Case to pass the Test Case.*

Step	***Test Procedure***	***Device***
1	CONFIGURE: Determine the number of external analog ports required by the specification (F.2.3.2). RECORD this information as: »Required_Ports	
2	Determine a random port from 1 to Required_Ports. RECORD this information as: »Subject_Port	
3	GET the following object(s): »auxIOPortDescription.Subject_Port »auxIOPortResolution.Subject_Port	Pass / Fail (RFC 1157)
4	Determine the RESPONSE VALUE for auxIOPortDescription.2.Subject_Port. RECORD this information as: »Description	
5	Determine the RESPONSE VALUE for auxIOPortResolution.2.Subject_Port. RECORD this information as: »Resolution	
6	Calculate a random value between 0 and the maximum value supported by the device. RECORD this information as: »Value	
7	SET the following object(s) to the value(s) shown: »auxIOPortDescription.Subject_Port = 'Test'	Pass / Fail (Sec. F.2.2.1.7)
8	GET the following object(s): »auxIOPortDescription.Subject_Port	Pass / Fail (RFC 1157)
9	VERIFY that the RESPONSE VALUE for auxIOPortDescription.Subject_Port is equal to "Test".	Pass / Fail (NTCIP 1201 v02 Sec. 2.8.3.3)
10	SET the following object(s) to the value(s) shown: »auxIOPortDescription.Subject_Port = Description	Pass / Fail (Sec. F.2.2.1.7)
11	SET the following object(s) to the value(s) shown: »auxIOPortValue.Subject_Port = Value	Pass / Fail (Sec. F.2.2.4.1)
12	GET the following object(s): »auxIOPortValue.Subject_Port »auxIOPortLastCommandedState.Subject_Port	Pass / Fail (Sec. F.2.2.2.1)
13	VERIFY that the RESPONSE VALUE for auxIOPortLastCommandedState.Subject_Port is equal to Value.	Pass / Fail (NTCIP 1201 v02 Sec. 2.8.3.7)

© 2022 AASHTO / ITE / NEMA Copy Per TRF Distribution Permission

Test Case Results		
Tested By:	***Date Tested:***	***Pass / Fail***
Test Case Notes:		

© 2022 AASHTO / ITE / NEMA

C.2.3.12 Mobile Sources Tests

C.2.3.12.1 Retrieve Sensor Profile with Mobile Sources

Test Case: 12.1	***Title:***	*Retrieve Sensor Profile with Mobile Sources*	
	Description:	*This test case verifies that the ESS returns a list of records recorded by the ESS mobile station over a period of time.*	
	Variables:	*PrecipRate_Supported*	*PRL 3.5.2.3.2.6.5*
		PrecipTotal_Supported	*PRL 3.5.2.3.2.6.6*
		PrecipUser_Supported	*PRL 3.5.2.3.2.6.7*
		Visibility_Supported	*PRL 2.5.2.1.7*
		AdjSnowDepth_Supported	*PRL 3.5.2.3.3.4*
		RoadwaySnowDepth_Supported	*PRL 3.5.2.3.3.5*
		IceThickness_Supported	*PRL 3.5.2.3.3.6*
		Passive_Pavement_Sensor	*Test Plan*
		PrecipSituation_Supported	*3.5.2.3.5.2*
		WindSituation_Supported	*3.5.2.3.5.1*
		VisibilitySituation_Supported	*3.5.2.3.5.4*
		GroundState_Supported	*3.5.2.3.5.5*
		PavementState_Supported	*3.5.2.3.5.6*
		CloudSituation_Supported	*3.5.2.3.5.7*
	Pass/Fail Criteria:	*The device under test (DUT) shall pass every verification step included within the Test Case in order to pass the Test Case.*	

Step	***Test Procedure***	***Device***
1	GET the following object(s): »globalTime.0 »globalDaylightSaving.0	
2	VERIFY that the RESPONSE VALUE for globalTime.0 and globalDaylightSaving.0 are appropriate.	Pass / Fail (Clause 3.5.2.3.10)
3	GET the following object(s): »essLatitude.0 »essLongitude.0 »essVehicleSpeed.0 »essVehicleBearing.0 »essReferenceHeight.0	
4	If supported, VERIFY that the RESPONSE VALUE for essLatitude.0, essLongitude.0 and essReferenceHeight.0 are appropriate.	Pass / Fail (Clause 3.5.2.3.10)
5	If supported, VERIFY that the RESPONSE VALUE essVehicleSpeed.0 and essVehicleBearing.0 are appropriate.	Pass / Fail (Clause 3.5.2.3.10)
6	GET the following object(s): » windSensorTableNumSensors.0	
7	IF windSensorTableNumSensors.0 is greater than 0, PERFORM the test case labeled 'Retrieve Wind Data' (C.2.3.3.3)	Pass / Fail (Clause 3.5.2.3.10)
8	GET the following object(s): »essNumTemperatureSensors.0	

© 2022 AASHTO / ITE / NEMA Copy Per TRF Distribution Permission

9	IF essNumTemperatureSensors.0 is greater than 0, PERFORM the test case labeled 'Retrieve Temperature' (C.2.3.3.4)	Pass / Fail (Clause 3.5.2.3.10)
10	GET the following object(s): »precipitationSensorTableNumSensors.0	
11	IF precipitationSensorTableNumSensors.0 is greater than 0, then PROCEED to Step 11.1; otherwise, proceed to Step 12.	
11.1	PERFORM the test case labeled 'Retrieve Precipitation Presence' (C.2.3.3.13)	Pass / Fail (Clause 3.5.2.3.10)
11.2	IF PrecipRate_Supported is equal to true, then PERFORM the test case labeled 'Retrieve Precipitation Rates' (C.2.3.3.14)	Pass / Fail (Clause 3.5.2.3.10)
11.3	IF PrecipTotal_Supported is equal to true, then PERFORM the test case labeled 'Retrieve Precipitation Totals' (C.2.3.3.15)	Pass / Fail (Clause 3.5.2.3.10)
12	IF AdjSnowDepth_Supported is equal to true, then PERFORM the test case labeled 'Retrieve Adjacent Snow Depth' (C.2.3.4.14)	Pass / Fail (Clause 3.5.2.3.10)
13	IF RoadwaySnowDepth_Supported is equal to true, then PERFORM the test case labeled 'Retrieve Roadway Snow Depth' (C.2.3.4.15)	Pass / Fail (Clause 3.5.2.3.10)
14	IF IceThickness_Supported is equal to true, then PERFORM the test case labeled 'Retrieve Roadway Ice Thickness' (C.2.3.4.16)	Pass / Fail (Clause 3.5.2.3.10)
15	IF Visibility_Supported is equal to true, then PERFORM the test case labeled 'Retrieve Visibility' (C.2.3.3.11).	Pass / Fail (Clause 3.5.2.3.10)
16	GET the following object(s): »essNumPressureSensors.0	
17	IF essNumPressureSensors.0 is greater than 0, PERFORM the test case labeled 'Retrieve Atmospheric Pressure for Each Atmospheric Pressure Sensor' (C.2.3.3.17)	Pass / Fail (Clause 3.5.2.3.10)
18	GET the following object(s): »humiditySensorTableNumSensors.0	
19	IF humiditySensorTableNumSensors.0 is greater than 0, PERFORM the test case labeled 'Retrieve Relative Humidity Sensor' (C.2.3.3.18)	Pass / Fail (Clause 3.5.2.3.10)
20	IF Pavement_Supported is equal to true, then PROCEED to Step 20.1; otherwise, proceed to Step 21.	
20.1	CONFIGURE: Determine the identifier of a passive pavement sensor (Test Plan). RECORD this information as: »Passive_Pavement_Sensor	
20.2	GET the following object(s): »essSurfaceTemperature.Passive_Pavement_Sensor »essSurfaceSalinity.Passive_Pavement_Sensor »essSurfaceFreezePoint.Passive_Pavement_Sensor »essPavementSensorError.Passive_Pavement_Sensor »essSurfaceIceOrWaterDepth.Passive_Pavement_Sensor »pavementSensorSurfaceCondition.Passive_Pavement_Sensor »pavementSensorForecastCondition.Passive_Pavement_Sensor »pavementSensorFrictionCoefficient.Passive_Pavement_Sensor »pavementIcePercentage.Passive_Pavement_Sensor	
20.3	VERIFY that the RESPONSE VALUE for essSurfaceTemperature.Passive_Pavement_Sensor is greater than or equal to -1000.	Pass / Fail (Sec. 5.11.3.8)

© 2022 AASHTO / ITE / NEMA

20.4	VERIFY that the RESPONSE VALUE for essSurfaceTemperature.Passive_Pavement_Sensor is less than or equal to 1001.	Pass / Fail (Sec. 5.11.3.8)
20.5	VERIFY that the RESPONSE VALUE for essSurfaceTemperature.Passive_Pavement_Sensor is APPROPRIATE.	Pass / Fail (Sec. 5.11.3.8)
20.6	VERIFY that the RESPONSE VALUE for essSurfaceSalinity.Passive_Pavement_Sensor is greater than or equal to 0.	Pass / Fail (Sec. 5.11.3.11)
20.7	VERIFY that the RESPONSE VALUE for essSurfaceSalinity.Passive_Pavement_Sensor is less than or equal to 65535.	Pass / Fail (Sec. 5.11.3.11)
20.8	VERIFY that the RESPONSE VALUE for essSurfaceSalinity.Passive_Pavement_Sensor is APPROPRIATE.	Pass / Fail (Sec. 5.11.3.11)
20.9	VERIFY that the RESPONSE VALUE for essSurfaceFreezePoint.Passive_Pavement_Sensor is greater than or equal to -1000.	Pass / Fail (Sec. 5.11.3.13)
20.10	VERIFY that the RESPONSE VALUE for essSurfaceFreezePoint.Passive_Pavement_Sensor is less than or equal to 1001.	Pass / Fail (Sec. 5.11.3.13)
20.11	VERIFY that the RESPONSE VALUE for essSurfaceFreezePoint.Passive_Pavement_Sensor is APPROPRIATE.	Pass / Fail (Sec. 5.11.3.13)
20.12	VERIFY that the RESPONSE VALUE for essPavementSensorError.Passive_Pavement_Sensor is greater than or equal to 1.	Pass / Fail (Sec. 5.11.3.15)
20.13	VERIFY that the RESPONSE VALUE for essPavementSensorError.Passive_Pavement_Sensor is less than or equal to 6.	Pass / Fail (Sec. 5.11.3.15)
20.14	VERIFY that the RESPONSE VALUE for essPavementSensorError.Passive_Pavement_Sensor is APPROPRIATE.	Pass / Fail (Sec. 5.11.3.15)
20.15	VERIFY that the RESPONSE VALUE for essSurfaceIceOrWaterDepth.Passive_Pavement_Sensor is greater than or equal to 0.	Pass / Fail (Sec. 5.11.3.27)
20.16	VERIFY that the RESPONSE VALUE for essSurfaceIceOrWaterDepth.Passive_Pavement_Sensor is less than or equal to 101.	Pass / Fail (Sec. 5.11.3.27)
20.17	VERIFY that the RESPONSE VALUE for essSurfaceIceOrWaterDepth.Passive_Pavement_Sensor is APPROPRIATE.	Pass / Fail (Sec. 5.11.3.27)
20.18	VERIFY that the RESPONSE VALUE for pavementSensorSurfaceCondition.Passive_Pavement_Sensor is greater than or equal to 1.	Pass / Fail (Sec. 5.11.3.22)
20.19	VERIFY that the RESPONSE VALUE for pavementSensorSurfaceCondition.Passive_Pavement_Sensor is less than or equal to 14.	Pass / Fail (Sec. 5.11.3.22)
20.20	VERIFY that the RESPONSE VALUE for pavementSensorSurfaceCondition.Passive_Pavement_Sensor is APPROPRIATE.	Pass / Fail (Sec. 5.11.3.22)
20.21	VERIFY that the RESPONSE VALUE for pavementSensorForecastCondition .Passive_Pavement_Sensor is greater than or equal to 1.	Pass / Fail (Sec. 5.11.3.23)
20.22	VERIFY that the RESPONSE VALUE for pavementSensorForecastCondition.Passive_Pavement_Sensor is less than or equal to 8.	Pass / Fail (Sec. 5.11.3.23)
20.23	VERIFY that the RESPONSE VALUE for pavementSensorForecastCondition.Passive_Pavement_Sensor is APPROPRIATE.	Pass / Fail (Sec. 5.11.3.23)

© 2022 AASHTO / ITE / NEMA Copy Per TRF Distribution Permission

20.24	VERIFY that the RESPONSE VALUE for pavementSensorFrictionCoefficient.Passive_Pavement_Sensor is greater than or equal to 0.	Pass / Fail (Sec. 5.11.3.24)
20.25	VERIFY that the RESPONSE VALUE for pavementSensorFrictionCoefficient.Passive_Pavement_Sensor is less than or equal to 101.	Pass / Fail (Sec. 5.11.3.24)
20.26	VERIFY that the RESPONSE VALUE for pavementSensorFrictionCoefficient.Passive_Pavement_Sensor is APPROPRIATE.	Pass / Fail (Sec. 5.11.3.24)
20.27	VERIFY that the RESPONSE VALUE for pavementIcePercentage.Passive_Pavement_Sensor is greater than or equal to 0.	Pass / Fail (Sec. 5.11.3.27)
20.28	VERIFY that the RESPONSE VALUE for pavementIcePercentage.Passive_Pavement_Sensor is less than or equal to 101.	Pass / Fail (Sec. 5.11.3.27)
20.29	VERIFY that the RESPONSE VALUE for pavementIcePercentage.Passive_Pavement_Sensor is APPROPRIATE.	Pass / Fail (Sec. 5.11.3.27)
21	IF PrecipSituation_Supported is equal to true, then PERFORM the test case labeled 'Retrieve Precipitation Situation' (C.2.3.5.2)	Pass / Fail
22	IF VisibilitySituation_Supported is equal to true, then PERFORM the test case labeled 'Retrieve Visibility Situation' (C.2.3.5.4)	Pass / Fail
23	IF GroundState_Supported is equal to true, then PERFORM the test case labeled 'Retrieve Ground State' (C.2.3.5.5)	Pass / Fail
24	IF PavementState_Supported is equal to true, then PERFORM the test case labeled 'Retrieve Pavement State' (C.2.3.5.8)	Pass / Fail
25	IF CloudSituation_Supported is equal to true, then PERFORM the test case labeled 'Retrieve Cloud Situation' (C.2.3.5.7)	Pass / Fail

Test Case Results		
Tested By:	***Date Tested:***	***Pass / Fail***
Test Case Notes:		

© 2022 AASHTO / ITE / NEMA

Annex D
Documentation of Revisions [Informative]

Annex D identifies the changes that have been made to NTCIP 1204 v04. The NTCIP effort makes reasonable efforts to ensure that standards are as backward compatible as possible, but the primary purpose of NTCIP 1204 v04 is to provide interoperability by developing standards in a consensus environment. When changes are required to meet these objectives, the problematic objects are refined (if the issue is primarily editorial) or deprecated and, in most cases, replaced with new objects. Annex D identifies why each of these changes has been made. New implementations should support the new/replacement objects; they may also support deprecated objects.

D.1 NTCIP 1204 v01 to NTCIP 1204 v02

General edits were made to the MIB header to reflect updates to other MIBs from which this MIB imports data.

All DESCRIPTION fields were updated to conform to NTCIP 8004 v02.

The STATUS of all objects was changed to "mandatory" to reflect the fact that conformance is now measured through the use of the PRL as contained in Section 3 and the RTM contained in Annex A.

References to Global Objects are now made through the RTM rather than through comments in the MIB.

Several objects were added to reflect new user needs.

The following identify additional edits that were made.

D.1.1 Station Category

The definition of essNtcipCategory was modified to reflect the fact that this parameter relates to "category" rather than "type".

D.1.2 Latitude

The definition of the essLatitude object was modified to reference the datum set to be used.

D.1.3 Wind Sensor Information

The various wind objects were deprecated and replaced with a table to allow the standard to support multiple wind sensors. The deprecated objects and their replacements are listed as follows:

a) essWindSensorHeight was replaced with windSensorHeight and windSensorLocation
b) essAvgWindDirection was replaced with windSensorAvgDirection
c) essAvgWindSpeed was replaced with windSensorAvgSpeed
d) essSpotWindDirection was replaced with windSensorSpotDirection
e) essSpotWindSpeed was replaced with windSensorSpotSpeed
f) essWindSituation was replaced with windSensorSituation
g) essMaxWindGustSpeed was replaced with windSensorGustSpeed
h) essMaxWindGustDir was replaced with windSensorGustDirection

In addition, the meaning of zero was clarified for the wind direction objects.

© 2022 AASHTO / ITE / NEMA Do Not Copy Without Written Permission

New implementations should support the replacement objects but may also support the original objects for backwards compatibility purposes. If the original objects are supported, they should report the values reported by the first wind sensor.

D.1.4 Water Depth

The essWaterDepth object was deprecated to reflect the fact that the ESS may support multiple Water Level Sensors. New implementations should support the replacement objects (i.e., those associated with the Water Level Sensor Table) but may also support essWaterDepth for backwards compatibility purposes.

D.1.5 Solar Radiation

The essSolarRadiation object was deprecated to reflect the fact that this value should be an instantaneous value rather than a value integrated over 24 hours to provide maximum compatibility with BUFR. New implementations should support the replacement object (essInstantaneousSolarRadiation) but may also support essSolarRadiation for backwards compatibility purposes.

D.1.6 Surface Water Depth

The essSurfaceWaterDepth object was deprecated to allow more precise measurements as required in practice. New implementations should support the replacement object (essSurfaceIceOrWaterDepth) but may also support essSurfaceWaterDepth for backwards compatibility purposes.

D.1.7 Surface Conductivity

The essSurfaceConductivity object was deprecated to correct the units of the object. New implementations should support the replacement object (essSurfaceConductivityV2) but may also support essSurfaceConductivity for backwards compatibility purposes.

D.1.8 NTCIP 1204 V02 Errata

Prior to publishing NTCIP 1204 v02, a few minor errors were identified in the document that led to the release of an Errata Sheet that corrected the issues as identified in Annex D.1.9 and D.1.10.

D.1.9 Correct OID Numbers

The Object Identifiers for essSubSurfaceMoisture and essSubSurfaceSensorError were inadvertently changed in NTCIP 1204 v02. This change was corrected in the Errata by returning the assigned Object Identifiers to their original values (as defined in NTCIP 1204 v01).

D.1.10 Correct Snapshot Camera Details

Sections 4.2.1 (Capture Snapshot Image) and 5.16.3.4 (essSnapshotCameraCommand) contained slight inconsistencies within their definitions of how a snapshot camera would operate. The dialog in Section 4.2.1 was corrected to allow the operation suggested by the essSnapshotCameraCommand object, namely that the SNMP response to the snapshot command does not have to wait for action of capturing and storing the snapshot image. Likewise, the ACCESS of essSnapshotCameraCommand (Section 5.16.3.4) was corrected from read-only to read-write to allow for the operation discussed in both the object DESCRIPTION as well as Section 4.2.1 (Capture Snapshot Image).

D.2 NTCIP 1204 v02 to NTCIP 1204 v03

The primary change from NTCIP 1204 v02 to NTCIP 1204 v03 was the addition of the test procedures in Annex C. However, adding these procedures also identified a few other anomalies, which are addressed.

Do Not Copy Without Written Permission © 2022 AASHTO / ITE / NEMA

D.2.1 NTCIP References

Annex D.2.1 identifies changes that have been made in relation to referenced standards.

References to the MIB Module name (especially in block objects) has been revised from "NTCIP1204-200x," where the suffix was the year of Joint Approval, to "NTCIP1204-v03," with the suffix as the Major Version number, as an editorial change.

D.2.1.1 NTCIP 1201 Reference

The reference for the definition of global objects was updated to NTCIP 1201:2005 with Amendment 2. The only changes that this created are as follows:

a) Event Logging Objects—These objects are unchanged, but have been moved from NTCIP 1201 to NTCIP 1103 v01.
b) Auxiliary I/O Objects—These objects were renamed to prevent any naming conflicts from objects previously defined in NTCIP 1204 that have now been deprecated. This change has no effect on deployments (i.e., the textual name is not used within a data exchange.).

D.2.1.2 NTCIP 1103 v01 Reference

Because Auxiliary objects have been moved to NTCIP 1103 v01, NTCIP 1103 v01 has been made a normative reference.

D.2.1.3 NTCIP 8004 v02 Reference

NTCIP 8004 v02 publication is anticipated shortly. NTCIP 8004 v02 does not require any changes to NTCIP 1204 v03.

D.2.1.4 NTCIP 8007 v01 Reference

Since NTCIP 1204 v03 includes test procedures, 1204 v03 now includes a reference to NTCIP 8007 v01.

D.2.2 Deletion of Requirement 3.5.1.3.2

A review of NTCIP 1204 v02 revealed that Requirement 3.5.1.3.2 (Retrieve Mobile Treatment Information) was redundant with Requirement 3.5.3.1.3 (Retrieve Mobile Pavement Treatment Configuration). After consideration, it was determined that the requirement was more appropriately defined in Section 3.5.3.1.3 (i.e., according to the terms used in this standard, the ESS Manager does not include pavement treatment information; that information would be stored in the PTS Manager); therefore Section 3.5.1.3.2 was deleted.

D.2.3 Clarify Snapshot Camera Configuration

Requirements 3.5.2.1.9 and 3.5.2.3.9 were edited to more accurately reflect the intent and design of NTCIP 1204 v03.

D.2.4 Remove Copy Snapshot Requirement

Requirement 3.5.2.4.3 and its corresponding dialog defined in Section 4.2.4 were deprecated because the defined FTP mechanism does not support the copy operation. After discussing this issue, it was determined that there was not really a need to support the copy operation if the snapshot filename can be defined to use a sequence field (see Requirement 3.6.24).

© 2022 AASHTO / ITE / NEMA Do Not Copy Without Written Permission

D.2.5 Correct Stationary Pavement Treatment System Configuration

Item b of Requirements 3.5.3.1.1.b, 3.5.3.1.2.b, and 3.5.3.4.2 were revised to reflect the design of the MIB objects. Originally, the requirement stated that the "spray duration" was a configurable parameter. This statement did not properly capture the intent; however, the intent was properly implemented in the design. The intent was to define how long the PTS is required to signal the external sprayer device to ensure that the PTS sprayer acts upon the signal. The duration of the spray is not a configurable parameter. This change did not require any change to the ptsSignalDuration object, but did require a change to the ptsCommandState object (Section 5.13.8). related object definition (Section 5.13.10). Further, the change to the ptsCommandState object required a change to the ptsOperationalMode object (Section 5.13.7), since it references ptsCommandState within its definition. Therefore, both of these objects were changed to obsolete status, since there were no known deployments at the time of the change, and new objects were added to accommodate the change in a backward compatible fashion.

D.2.6 Required Number of Water Level Sensors

Version 3 added Requirement 3.6.22 to allow a user of NTCIP 1204 v03 an easy way to specify the number of water level sensors to be included in a deployment when using the PRL.

D.2.7 Addition of Configurable Filenames for Snapshot Images

A number of requirements (Sections 3.6.23 through 3.6.27) were added to allow a management station to configure the name that the ESS should use when saving snapshot images.

D.2.8 Modify Set Constraints

A review of NTCIP 1204 v02 indicated that the following objects were defined as read-write, but had a set constraint that prevented it from being set:

a) essNtcipSiteDescription
b) essPaveTreatProductType

These typos were corrected.

D.2.9 Clarify essTypeofStation

The definition of the essTypeofStation object was clarified with an <Informative> statement to clarify that the value of 2 is reserved and that a hybrid station requires two instances of the MIB.

D.2.10 Correct Block Objects

A review of NTCIP 1204 v02 revealed that the following newly created block objects referenced deprecated objects within the block object structure:

a) Station Meta Data Block
b) Weather Block
c) Pavement Block

To rectify this problem, the existing block objects were deprecated and new replacement block objects were created.

> Note: All block objects were removed in NTCIP 1204 v04.

Do Not Copy Without Written Permission © 2022 AASHTO / ITE / NEMA

D.2.11 Correct Access of essSnapshotCameraCommand

Shortly after NTCIP 1204 v02 was released, implementers realized that the essSnapshotCameraCommand object has to be read-write for the snapshot feature to have any useful functionality. While this was a significant technical change on paper, the object has no use when implemented read-only, converting it to read-write should not create any backwards compatibility problems with existing deployments, many implementers have already implemented it as read-write, and it has been determined to be the approach that results in the smallest impact to existing deployments.

D.2.12 Added a Backward Compatibility User Need and Associated Requirements

Additional user needs and requirements were added to address backward compatibility concerns.

D.2.13 Added Dialogs to Separate NTCIP 1204 v01 and NTCIP 1204 v02 Objects

A few of the standardized dialogs in NTCIP 1204 v02 combined NTCIP 1204 v01 and NTCIP 1204 v02 objects into a single request. As a result, if the standardized dialog was used to interface with an NTCIP 1204 v01 device, the request would fail with a noSuchName error.

NTCIP 1202 v03 modified these dialogs to separate the NTCIP 1204 v01 objects from the NTCIP 1204 v02 objects. This separation has affected the standardized dialogs for the following requirements:

a) 3.5.2.3.2.6.1 Retrieve Precipitation Presence
b) 3.5.2.3.2.7 Retrieve Solar Radiation
c) 3.5.2.3.3.1 Retrieve Pavement Surface Condition
d) 3.5.2.3.3.2 Retrieve Icing Conditions – Active
e) 3.5.2.3.3.3 Retrieve Icing Conditions – Passive

Table 37 summarizes the impact that this change has on backward and forward compatibility.

Table 37 Backward and Forward Compatibility Impacts

Central	Device	Interoperable	Notes
v01	v01	Maybe [1]	1204 version v01 did not define any standardized dialogs; however, interoperability is provided through the rules of Section 4 (for v02 and v03) and RFC 1157. Interoperability is obtained as long as the v02/v03 device supports the deprecated objects used by the central, if any.
v01	v02	Maybe	
v01	v03	Maybe	
v02	v01	Maybe—With additional logic in central	A few of the standardized dialogs grouped v01 and v02 data into a single request; using these dialogs would result in a noSuchName error. This is a forward-compatible response since the v02 central could then implement logic that would only request v01 data; however, such logic would be outside the scope of the standardized dialog.
v02	v02	Yes	
v02	v03	Yes	While v03 defines a slightly different standardized dialog, the rules of Section 4 and RFC 1157 require the device to support requests that combine data in any combination that do not break the rules defined in Section 4.3. Thus, interoperability is maintained.

© 2022 AASHTO / ITE / NEMA Do Not Copy Without Written Permission

Central	Device	Interoperable	Notes
v03	v01	Maybe	Data defined in different versions are separated into different requests with logic used to determine if and when deprecated objects or v02 objects should be requested. Thus, interoperability is maintained and automatically provided.
v03	v02	Yes	While v03 defines a slightly different standardized dialog, the rules of Section 4 and RFC 1157 require the device to support requests that combine data in any combination that do not break the rules defined in Section 4.3. Thus, interoperability is maintained.
v03	v03	Yes	
[Note 1] If the v01 to v02 change was because of an ambiguity, the original interoperability problems remain with any implementation of v01 objects.			

D.2.14 Clarified Handling of globalSetIDParameter

Annex H was added to clarify exactly what parameters would affect the value of the globalSetIDParameter object. This was deemed to be a simple clarification since the definition of these objects did not change the written intent of the object definition.

D.2.15 Clarify Meaning of Static Tables

Objects that define how many rows exist in static tables were clarified with an informative statement to explain that the device may have internal logic to add and delete rows based on sensors being connected and disconnected from the device. These tables are still considered static from an NTCIP perspective since the size of the table is not managed using the protocol.

D.2.16 Seven Corrections Prior to Publication

0—Edited section 3.6.21 and other sections to modify the term "Response Time" to "Maximum Response Time".
1—Edited the SYNTAX for waterLevelSensorIndex and essSnapshotCameraIndex to INTEGER (1..255) from INTEGER (0..255), as an editorial change.
2—Edited all occurrences of <table object>.0 to read <table object>.x, as an editorial change.
3—Edited the <Definition> of essSnapshotCameraFilename to read “and the following case-sensitive field names enclosed in chevrons (<>):,” as an editorial change.
4—Added an informative subfield to the DESCRIPTION field of essSnapshotCameraFilename which partially reads “<Informative>The filename ...,” as an editorial change.
5—Added comments to the object definition, and an informative subfield, regarding the SYNTAX for essSnapshotCameraFilename, to alert implementers that syntax may change to OCTET STRING (SIZE (1..255)) from OCTET STRING (SIZE (0..255)), to prevent zero length names.
6—Edited the occurrences of the MIB Module name (especially in block objects) from “NTCIP1204-200x” to “NTCIP1204-v03,” as an editorial change.

D.3 NTCIP 1204 v03 to NTCIP 1204 v04

The primary changes from NTCIP 1204 v03 to NTCIP 1204 v04 are improved support for multiple sensor readings of the same sensor type, improved support for new infrared technologies that collect different sensor readings from a single device, and expanded support for metadata.

D.3.1 NTCIP References

Annex D.3.1 identifies changes that have been made in relation to referenced standards.

 © 2022 AASHTO / ITE / NEMA

References to the MIB Module name (especially in block objects) has been revised from "NTCIP1204-200x," where the suffix was the year of Joint Approval, to "NTCIP1204-v03," with the suffix as the Major Version number, as an editorial change.

D.3.1.1 NTCIP 1201 Reference

The reference for the definition of global objects was updated to NTCIP 1201 v03. The only changes that this created are as follows:

a) Auxiliary I/O Objects - These objects were updated to reference the new auxiliary I/O objects in NTCIP 1201 v03.
b) Global Time Objects - These objects were added to improve support for daylight saving time mechanisms as referenced in NTCIP 1201 v03.

D.3.1.2 NTCIP 1103 v03 Reference

The reference for the definition of global objects and the procedures and data formats for use within NTCIP systems was updated to NTCIP 1103 v03. The only changes that this created are as follows:

a) Event Logging Objects - These objects are unchanged, but were moved within NTCIP 1103 v03 to a different section.
b) SNMP Traps – New objects are referenced to support user needs and requirements for SNMP traps.

D.3.2 Requirements for Compressed Data

Annex D.3.2 identifies changes that have been made in relation to compressed data.

A review of the block objects indicated that the block objects were mostly unused and no longer needed. The block objects were created to minimize overhead requirements when transmitting the data over wireless communications networks or low speed communications lines. However, the participating agencies and vendors indicated that with the current communications technologies, block objects were not being used.

Thus, the following requirements and their associated block object were deprecated.

a) Section 3.5.1.1.2, Retrieve Compressed Station Metadata (essStationMetaDataV3Block)
b) Section 3.5.1.3.3, Retrieve Compressed Mobile ESS Data (essMobileBlock)
c) Section 3.5.2.3.1, Retrieve Weather Profile with Mobile Sources (essWeatherV3Block)
d) Section 3.5.2.3.2.9, Retrieve Compressed Weather Data
e) Section 3.5.2.3.3.7, Retrieve Compressed Pavement Condition Data
f) Section 3.5.2.3.4.3, Retrieve Compressed Subsurface Condition Data
g) Section 3.5.2.3.6.9, Retrieve Compressed Air Quality Data (5.14.8)
h) Section 3.5.3.1.3, Retrieve Mobile Pavement Treatment Configuration (5.13.6)

D.3.3 Multiple Sensors

Several weather sensor objects were deprecated and replaced with a table to allow the standard to support reporting sensor readings from multiple sensors of the same type.

New implementations should support the replacement objects but may also support the original objects for backwards compatibility purposes. If the original objects are supported, they should report the values reported by the first sensor in the table.

© 2022 AASHTO / ITE / NEMA Do Not Copy Without Written Permission

D.3.3.1 Atmospheric Pressure Sensor

The various atmospheric pressure objects were deprecated and replaced with a table to allow the standard to support multiple atmospheric pressure sensors. The deprecated objects and their replacements are listed as follows:

a) essPressureHeight was replaced with essPressureSensorHeight
b) essAtmosphericPressure was replaced with essPressureSensorAtmosphericPressure

New implementations should support the replacement objects but may also support the original objects for backwards compatibility purposes. If the original objects are supported, they should report the values reported by the first atmospheric pressure sensor.

D.3.3.2 Humidity Sensor

The various humidity objects were deprecated and replaced with a table to allow the standard to support multiple humidity sensors.

The deprecated requirements and their replacements are listed as follows:

a) Section 3.5.2.3.2.5, Retrieve Humidity was replaced by Section 3.5.2.3.2.11

The deprecated objects and their replacements are listed as follows:

a) essRelativeHumidity was replaced with humiditySensorRelativeHumidity

New implementations should support the replacement objects but may also support the original objects for backwards compatibility purposes. If the original objects are supported, they should report the values reported by the first humidity sensor.

D.3.3.3 Precipitation Sensor

The various precipitation objects were deprecated and replaced with a table to allow the standard to support multiple precipitation sensors.

The deprecated requirements and their replacements are listed as follows:

a) Section 3.5.2.3.2.6.1, Retrieve Precipitation Presence was replaced by Section 3.5.2.3.2.6.4
b) Section 3.5.2.3.2.6.2, Retrieve Precipitation Rates was replaced by Section 3.5.2.3.2.6.5
c) Section 3.5.2.3.2.6.3, Retrieve Precipitation Totals was replaced by Section 3.5.2.3.2.6.6

The deprecated objects and their replacements are listed as follows:

a) essAdjacentSnowDepth was replaced with precipitationSensorAdjacentSnowDepth
b) essRoadwaySnowDepth was replaced with precipitationSensorRoadwaySnowDepth
c) essRoadwaySnowPackDepth was replaced with precipitationSensorRoadwaySnowPackDepth
d) essPrecipYesNo was replaced with precipitationSensorPrecipYesNo
e) essPrecipRate was replaced with precipitationSensorPrecipRate
f) essSnowfallAccumRate was replaced with precipitationSensorSnowfallAccumRate
g) essPrecipSituation was replaced with precipitationSensorPrecipSituation
h) essPrecipitationStartTime was replaced with precipitationSensorPrecipitationStartTime
i) essPrecipitationEndTime was replaced with precipitationSensorPrecipitationEndTime
j) essPrecipitationOneHour was replaced with precipitationSensorPrecipitationOneHour
k) essPrecipitationThreeHours was replaced with precipitationSensorPrecipitationThreeHours
l) essPrecipitationSixHours was replaced with precipitationSensorPrecipitationSixHours
m) essPrecipitationTwelveHours was replaced with precipitationSensorPrecipitationTwelveHours

Do Not Copy Without Written Permission © 2022 AASHTO / ITE / NEMA

n) essPrecipitation24Hours was replaced with precipitationSensorPrecipitation24Hours
o) precipitationSensorModelInformation was replaced with precipitationSensorModelInformationV4

New implementations should support the replacement objects but may also support the original objects for backwards compatibility purposes. If the original objects are supported, they should report the values reported by the first humidity sensor.

D.3.3.4 Radiation Sensor

The various radiation objects were deprecated and replaced with a table to allow the standard to support reporting of multiple radiation sensor values.

The deprecated requirements and their replacements are listed as follows:

a) Section 3.5.2.3.2.7, Retrieve Solar Radiation was replaced by Section 3.5.2.3.2.12

The deprecated objects and their replacements are listed as follows:

a) essTotalSun was replaced with essTotalSunV4
b) essInstantaneousTerrestrialRadiation was replaced with essInstantaneousTerrestrialRadiationV4
c) essInstantaneousSolarRadiation was replaced with essInstantaneousSolarRadiationV4
d) essTotalRadiation was replaced with essTotalRadiationV4

D.3.3.5 Friction

The essMobileFriction object was deprecated and moved to the pavement sensor table to allow the standard to support reporting of coefficient of friction sensor values from multiple pavement sensors.

The deprecated object and its replacement is listed as follows:

a) essMobileFriction was replaced with pavementSensorFrictionCoefficient

D.3.4 Expanded Support for Metadata

Added support for metadata for all environmental sensors that were not already supported. Metadata consists of a table with the make, model, and version number of the sensor.

D.3.5 Removed <Set Constraint>

Removed the <Set Constraint> data dictionary meta attribute for each object specification. The <Set Constraint> meta attribute is not defined in NTCIP 8004 v02, and the definition of this meta attribute is unclear.

D.3.6 Added <Object Identifier>

Added the full identifier from the root node to the DESCRIPTION field of each object specification, as required by NTCIP 8004 v02.

D.3.7 Updated Cloud Situation

The cloud situation object was deprecated and replaced with a new object that requirement used values as defined by the World Meteorological Organization. The replacement was made because the values used in the retired requirement were too subjective.

The deprecated requirement and its replacement is listed as follows:

a) Section 3.5.2.3.5.3, Retrieve Cloud Situation was replaced by Section 3.5.2.3.5.7

© 2022 AASHTO / ITE / NEMA Do Not Copy Without Written Permission

The deprecated object and its replacement is listed as follows:

a) essCloudSituation was replaced with essCloudSituationV4

D.3.8 Updated Pavement Surface Condition

The surface status condition object was deprecated and replaced with two new objects that distinguished between observed pavement surface conditions and forecasted surface conditions.

The deprecated objects and their replacements are listed as follows:

a) essSurfaceStatus was replaced with the pavementSensorSurfaceCondition and pavementSensorForecastCondition

D.3.9 Updated Ground State Assessment

Section 3.5.2.3.5.5, Retrieve Ground State was deprecated, resulting in the object essMobileObservationGroundState being deprecated. This replacement was made because the valid values were expanded to be more consistent with the valid values for the assessment of the pavement state in addition to several requested values. The replacement can be found in Section 3.5.2.3.5.8 and the new object essMobileObservationGroundStateV4.

D.3.10 Updated Pavement State Assessment

Section 3.5.2.3.5.5, Retrieve Pavement State was deprecated, resulting in the object essMobileObservationPavement being deprecated. This replacement was made because the valid values were expanded. The replacement can be found in Section 3.5.2.3.5.9 and the new object essMobileObservationPavementV4.

D.3.11 Pavement Monitoring Location

Added objects to indicate the location of the pavement surface that is being monitored. This location may be different from the location of the pavement sensor. This change was made to support pavement surface readings using non-intrusive technologies such as infrared or laser sensors.

D.3.12 Pavement Ice Percentage

Upon user request, support for reading the percentage of ice on the pavement surface, by volume, was added.

D.3.13 Added Support for Particulate Matter (2.5) Readings

Upon user request, support for reading the current concentration in the air of small particulate matter of 2.5 micrometers or less in diameter was added.

D.3.14 Retrieve Mobile Treatment Information Requirement

Section 3.5.2.4.3, Copy Snapshot was changed to obsolete.

D.3.15 Retrieve Mobile Treatment Information Requirement

Section 3.5.2.4.3, Copy Snapshot was changed to obsolete.

Do Not Copy Without Written Permission © 2022 AASHTO / ITE / NEMA

D.3.16 Height Objects

Changed essTemperatureSensorHeight, windSensorHeight, essPavementElevation, essPaveTreatmentAmount, and essPaveTreatmentWidth to read-write from read-only to support new requirements to allow agencies to update the height of the temperature, wind sensors and pavement surface using NTCIP. For the pavement treatment objects, these objects should have been read-write because requirement 3.5.3.1.4 allows a management station to configure the pavement treatment system.

D.3.17 Air Quality Parameter Corrections

Several air quality objects were deprecated and replaced because the units were out of range. The deprecated objects and their replacements are listed as follows:

a) essCO2 was replaced with essCO2V4
b) essNO was replaced with essNOV4
c) essO3 was replaced with essO3V4

In addition, NO is nitric oxide, not nitrous oxide as previously described.

© 2022 AASHTO / ITE / NEMA Do Not Copy Without Written Permission

Annex E
User Requests [Informative]

Annex E identifies features that were suggested for NTCIP 1204 v04, but are either supported by mechanisms that may not be readily obvious, or are not supported by NTCIP 1204 v04.

E.1 Features Indirectly Supported

The following identifies how certain features are supported by NTCIP 1204 v04.

E.1.1 Archiving Data on a Periodic Basis for Dial-up Operations

Some users wish to configure their ESS to archive data into memory on a periodic basis so that multiple readings may be retrieved in bulk at a later time (e.g., because of a long polling cycle over a dial-up link). To operate in a meaningful manner, each entry into the archive needs to have a timestamp that identifies when the measurement was taken.

This capability is provided through the "Provide Off-Line Log Data" Architectural Need defined in Annex F.1.1.3. This architectural need can be used in conjunction with any data supported by the device.

E.1.2 Precision and Accuracy Information

Some users need to know precision and accuracy information for each sensor, in addition to the type of sensor. Some users need this information to calibrate their weather models. The ESS WG discussed this feature and concluded direct support of this feature would result in a standard that is roughly two times the size and complexity of NTCIP 1204 v04. To support this capability indirectly, NTCIP 1204 v04 added support to provide metadata about the sensor. The metadata includes the make and model of each sensor. A user needing precision, accuracy, and type information about the sensor can then look up that information based on the sensor make and model.

> Note: At the time NTCIP 1204 v04 was developed, USDOT's Weather Data Environment (WxDE) was maintaining a list of all known sensor types used in the United States for environmental sensor stations. Each known sensor type is assigned a unique identifier in the WxDE. USDOT has suggested using the unique identifier, or using the sensor make and model name in the list, in describing the sensor make and model for naming consistency.

E.1.3 Retrieve Sensor Profile with Mobile Sources

One of the user needs identified was to collect sensor data from a mobile platform at regular intervals or on a conditional exception-based reporting (e.g., if an ice patch is detected). This feature requires that each sensor data record be either time-stamped or location-stamped or both. One method to collect this data with a time-stamp is to log the sensor data in an event log along with a time stamp, and optionally with the location of the mobile platform, then retrieve the event logs. NTCIP 1204 v03 also added block objects that supported this feature, but these block objects were removed in NTCIP 1204 v04 (See Annex D.3.2).

Requirement 3.5.2.3.10 supports recovering the sensor data from a mobile platform, including the time the sensor data is retrieved, but that is not a timestamp.

Do Not Copy Without Written Permission © 2022 AASHTO / ITE / NEMA

Another possibility is the development of an XML mobile block for communication between mobile platforms (e.g., snow plows) and a center (e.g., maintenance management or traffic management center). This requires a translation of the MIB/ASN.1 definition contained in the NTCIP 1204 v04 to an XML Schema definition. The XML Schema defines XML content (i.e., messages). NTCIP 2306 v01, provides guidance on the transport and compression of XML based on web services. NTCIP 2306 v01 also includes a method for describing message exchange combinations called dialogs, written in Web Services Description Language (WSDL). NTCIP 2306 v01 defines the following dialogs: Request-Response, Subscription-Publication, and One-way.

The Internet Engineering Task Force has developed RFC 5935, which defines the expression of Management Information Base (MIB) datatypes into XML Schema Definition (XSD) language. The primary objective of RFC 5935 is to enable the production of XML documents that are as faithful to the MIB as possible, using XSD as the validation mechanism.

The following example is taken from NTCIP 1204 v03. The example is NOT an endorsement by the ESS WG that the proposed example is an official interpretation of NTCIP 1204 v04 in XML format, but is for provided for informational purposes only. The MIB definition of the Mobile Block follows. The XML translation of a SEQUENCE is not included in the RFC 5935, but XML has a corresponding concept, which is follows the MIB definition.

E.1.3.1 Example Mobile Block MIB

```
essMobileBlock OBJECT-TYPE
SYNTAX      OerString
ACCESS      read-only
STATUS      mandatory
DESCRIPTION "<Definition>An OER encoded string of the EssMobileData structure
as defined below. This object is used for uploading current mobile station
data from the ESS in a bandwidth efficient manner.

The OPTIONAL fields shall be present if the data is supported by the
implementation and is valid. The OPTIONAL fields shall be omitted for any
data that is invalid or not supported by the implementation.

EssMobileData ::= SEQUENCE {
      essLatitude.0                       OPTIONAL, -- @NTCIP1204-v03
      essLongitude.0                      OPTIONAL, -- @NTCIP1204-v03
      essReferenceHeight.0                OPTIONAL, -- @NTCIP1204-v03
      essVehicleSpeed.0                   OPTIONAL, -- @NTCIP1204-v03
      essVehicleBearing.0                 OPTIONAL, -- @NTCIP1204-v03
      essVehicleOdemeter.0                OPTIONAL, -- @NTCIP1204-v03
      essMobileFriction.0                 OPTIONAL, -- @NTCIP1204-v03
      essMobileObservationGroundState.0   OPTIONAL, -- @NTCIP1204-v03
      essMobileObservationPavement.0      OPTIONAL, -- @NTCIP1204-v03
      essPaveTreatmentAmount.0            OPTIONAL, -- @NTCIP1204-v03
      essPaveTreatmentWidth.0             OPTIONAL  -- @NTCIP1204-v03
      }
<SetConstraint>read-only
<DescriptiveName>MobilePlatform.mobileBlock:frame
<Data Concept Type>Data Element"
::=   { essNtcipInstrumentation 6 }
```

E.1.3.2 Example Mobile Block XML Schema

The XML Schema representation follows

© 2022 AASHTO / ITE / NEMA Do Not Copy Without Written Permission

```
<xs:complexType name="EssMobileData">
        <xs:sequence>
            <xs:element name="essLatitude" type="EssLatitude"/>
            <xs:element name="essLongitude" type="EssLongitude"/>
            <xs:element name="essReferenceHeight" type="EssReferenceHeight"/>
            <xs:element name="essVehicleSpeed" type="EssVehicleSpeed"/>
            <xs:element name="essVehicleBearing" type="EssVehicleBearing"/>
            <xs:element name="essVehicleOdometer" type="EssVehicleOdometer"/>
            <xs:element name="essMobileFriction" type="xs:integer"/>
            <xs:element name="essMobileObservationGroundState" type="xs:integer"/>
            <xs:element name="essMobileObservationPavement" type="xs:integer"/>
            <xs:element name="essPaveTreatmentAmount" type="xs:integer"/>
            <xs:element name="essPaveTreatmentWidth" type="xs:integer"/>
        </xs:sequence>
        <!-- This is from v03 -->
</xs:complexType>
```

E.1.3.3 Example Latitude MIB and XML Schema

An example of the translation of a MIB definition for essLatitude follows, with its XML schema counterpart.

Latitude

```
essLatitude OBJECT-TYPE
SYNTAX      INTEGER (-90000000..90000001)
ACCESS      read-only
STATUS      mandatory
DESCRIPTION "<Definition>The latitude in 10^-6 degrees of the ESS station,
per WGS-84 datum.
<SetConstraint>read-only
<DescriptiveName>ESS.latitude:quantity
<Valid Value Rule>
The essLatitude at the North Pole is 90,000,000. The essLatitude at the South
Pole is -90,000,000. The value 90,000,001 shall indicate a missing value.
<Data Concept Type>Data Element
<Unit>latitude"
REFERENCE   "Resolution based on on-going location referencing activities;
the WMO Binary Code Form FM 94 BUFR Table B item 0 05 001 can be obtained by
dividing this value by 10."
::=   { essNtcipLocation 1}
```

```
<xs:simpleType name="EssLatitude">
        <xs:annotation>
            <xs:documentation>
                <objectClass>ESS</objectClass>
                <valueDomainTerm>qty</valueDomainTerm>
                <units>latitude</units>
                <!-- <Unit> -->
            </xs:documentation>
        </xs:annotation>
        <xs:restriction base="xs:integer">
            <xs:minInclusive value="-90000000"/>
            <xs:maxInclusive value="90000001"/>
            <!-- INTEGER translates to xs:integer -->
        </xs:restriction>
</xs:simpleType>
```

 © 2022 AASHTO / ITE / NEMA

E.2 Features Not Supported by This Version

E.2.1 User Defined Sampling Periods

Some users have requested the ability to configure the details about how a device calculates the current reading. For example, some have requested the ability to configure an overall sampling period that is used to archive data and then, for each entry into the archive, a second sampling period over which measurements are actually taken and averaged.

ESS WG discussed this feature and concluded that it would:

a) result in a standard that was not backward compatible with NTCIP 1204 v01.
b) result in a standard that was roughly three times the size and complexity of NTCIP 1204 v03
c) be difficult to implement and test

Instead, ESS WG has followed an approach that allows all data to be monitored, measured, and archived continuously using averaging periods that are appropriate and in wide use for each parameter. This data can be uploaded to a central system for further statistical analysis, if needed.

E.3 File Transfer Protocol (FTP)

Some agencies do not allow the use of FTP to transfer files, such as camera snapshots, across their agency's network. To conform to NTCIP 1204 v04, the implementation is still required to support the use of FTP as specified by NTCIP 1204 v04, but those implementations are allowed to use other protocols, such as HTTPS:, FTPS: or SFTP:, to transfer camera snapshots.

© 2022 AASHTO / ITE / NEMA Do Not Copy Without Written Permission

Annex F
Generic Clauses [Normative]

Annex F contains user needs, requirements, and dialogs that are considered to be generic to many types of NTCIP field devices. It is expected that the text contained in Annex F may eventually be defined in a separate standard. However, Annex F serves as a placeholder until this is achieved.

In the context of NTCIP 1204 v04, the word "device" in Annex F refers to the ESS.

F.1 External Concept of Operations

F.1.1 Generic Architectural Needs

NTCIP 1204 v04 addresses the interface between an ESS and one or more management stations (e.g., central computers, laptops, etc.). The data collected by the ESS may include data from multiple sensors. When communicating with a management station, each reading needs to be clearly associated with a specific sensor. After the management station has retrieved the data of interest, the operator can use the retrieved data to make decisions and initiate other events (such as changes to DMS messages) to better manage the transportation system.

To enable communications between these components, the transportation system manager needs to establish a communication system that links the ESS with a management station. For some systems, the resources required for communications may be minimal and as such the system may be designed for constant polling; other systems may require significant resources for communicating with the ESS and as such the system may be designed to minimize data exchanges. When deploying an ESS, the system designer needs to consider which of the following operational environments need to be supported.

F.1.1.1 Provide Live Data

The typical operational environment allows the management system to monitor and control the device by issuing requests (e.g., requests to access information, alter information, or control the device). In this environment, the device responds to requests from the management station (e.g., through the provision of live data, success/failure notice of information alteration, or success/failure of the command).

F.1.1.2 Provide Compressed Data

Some operational environments have limited data capacity because of limitations in the data rates of the media and/or because of multiple devices sharing the same communications channel. In such environments, compressed data provides the capability for grouping sets of data together so that data can be transmitted more efficiently over telecommunications networks, thereby conserving the limited data capacity of the channel.

F.1.1.3 Provide Off-line Log Data

Some operational environments do not have always-on connections (e.g., dial-up links). In such environments, a transportation system operator may wish to define conditions under which data is to be placed into a log, which can then be uploaded at a later time. For example, the operator may wish to maintain a log of when the cabinet door is opened.

Do Not Copy Without Written Permission © 2022 AASHTO / ITE / NEMA

F.1.1.4 Condition-based Exception Reporting

In some operational environments, it may be desirable to have the ESS automatically transmit data to the management station when certain conditions occur. Under this scenario, a manager can program the conditions that trigger a transmission and the information that is reported to the management station when the specified condition occurs. An example is a manager needs to know when an ice patch is detected on the pavement by a sensor on a mobile platform, or when a cabinet door is opened. These conditions can be programmed to cause the transmission of the alarm objects thus providing the management station with information regarding a change of state detected by an ESS sensor or at the ESS cabinet.

F.1.2 Generic Features

Annexes F.1.2.1 and F.1.2.2 document features of an ESS that are generic to most devices.

F.1.2.1 Retrieve Device Identity

A transportation system operator may need to determine basic information about the device, such as its location, and the make, model, and version of the device components. The device components can be a hardware, software, or firmware component, and could be a physical or logical entity in nature. This feature allows the operator to verify the identity of the device in the field and what software or firmware version is installed.

F.1.2.2 Control External Devices

A transportation system operator may need to turn simple auxiliary devices on and off. For example, the ESS may be co-located with a warning sign equipped with flashing beacons; this feature would allow the ESS controller to activate and deactivate the beacons rather than requiring an additional controller at the site.

F.2 External Requirements

F.2.1 Generic Architectural Requirements

Requirements for communication capabilities follow.

F.2.1.1 Support Basic Communications

Requirements for making requests follow.

F.2.1.1.1 Retrieve Data

A management station shall be able to retrieve any set of data from the device at any time.

F.2.1.1.2 Deliver Data

A management station shall be able to deliver data (e.g., configuration data, commands, etc.) to the device at any time.

> Note: Other requirements may place restrictions on how the device may respond under certain scenarios.

F.2.1.1.3 Explore Data

A management station shall be able to dynamically discover what data and data instances are supported by the device.

© 2022 AASHTO / ITE / NEMA Do Not Copy Without Written Permission

F.2.1.2 Support Logged Data

Requirements for managing the logged data follow.

F.2.1.2.1 Retrieve Current Configuration of Logging Service

Upon request from a management station, the device shall return the current configuration of the event logging service, including the classes and types of events that are currently configured.

F.2.1.2.2 Configure Logging Service

Upon request from a management station, the device shall configure the event logging service as requested, including configuration of the event classes and event types to log.

F.2.1.2.3 Retrieve Logged Data

Upon request from a management station, the device shall return the event log.

F.2.1.2.4 Clear Log

Upon request from a management station, the device shall clear the indicated log entries of a given event class.

F.2.1.2.5 Retrieve Capabilities of Event Logging Service

Upon request from a management station, the device shall return the capabilities of the event logging service, including the number of classes, number of event types, and number of events that can be supported by the device.

F.2.1.2.6 Retrieve Total Number of Logged Events

Upon request from a management station, the device shall return the total number of events that the device has detected.

F.2.1.3 Manage Exception Reporting Requirements

The requirements to manage exception reporting are as follows. A detailed explanation of how the design content (that are traced from these requirements) work can be found in Section 6 of NTCIP 1103 v03.

F.2.1.3.1 Enable/Disable Exception Reporting

The management station shall be able to enable and disable exception-based reporting for an ESS when user-specified conditions are met.

F.2.1.3.2 Configure Exception Reporting Condition Requirements

If exception based reporting is supported, a management station needs to specify the conditions under which the ESS is to automatically transmit data to the management station. The requirements to configure the user-specified conditions that the ESS monitors upon which the ESS transmits data to a management station follow.

Do Not Copy Without Written Permission © 2022 AASHTO / ITE / NEMA

F.2.1.3.2.1 Configure a Monitored (Watch) Object

Upon request from a management station, the ESS shall store the data element to be monitored for a specified change. The allowable changes, if supported by the ESS, are:

a) On-change Event - monitor the data element for changes in value
b) Greater Than Event - monitor the data element for values exceeding a defined threshold
c) Less Than Event - monitor the data element for values falling below a defined threshold
d) Hysteresis Event - monitor the data element for values exceeding an upper limit or dropping below a lower limit
e) Periodic Event - monitor the data element and create a log entry at user-defined intervals
f) Bit Flag Event - monitor the data element for one or more bits of a value becoming true (i.e., obtaining a value of one)

F.2.1.3.2.2 Configure a Monitored Group of Objects (Watch Block)

Upon request from a management station, the ESS shall store a group of one or more data elements (watch block) to be monitored to determine if a change has occurred to any data element in the group. This requirement allows an ESS to monitor two or more objects such that a change to any of the data elements in the group triggers the ESS to transmit preconfigured data value(s) to a management station. Monitoring a group of data elements provides the ESS with flexibility for supporting event logging and exception-based reporting with a wide variety of possible triggers.

F.2.1.3.3 Configure Exception Reporting Data Transmission Requirements

If exception based reporting is supported, a management station needs to specify the data to be automatically transmitted by the ESS if user-specified conditions are satisfied. The requirements to configure the data to be automatically transmitted by the ESS to a management station when a monitored condition occurs follow.

F.2.1.3.3.1 Configure a Report Object

Upon request from a management station, the ESS shall store a data element whose value is to be transmitted to a management station when a user-specified condition occurs.

F.2.1.3.3.2 Configure a Report Group of Objects (Block)

Upon request from a management station, the ESS shall store a group of one or more data elements whose values are to be transmitted to a management station when a user-specified condition occurs. Creating a block object, called a report block, containing this group of data to be transmitted reduces the transmission overhead.

F.2.1.3.4 Configure Exception Reporting Destination

Upon request from a management station, the ESS shall store the destination(s), in the form of a logical name and an IP address, that pre-configured data is to be transmitted when the user-specified conditions are met. This requirement allows the management station to specify the destination(s) that the pre-configured data is to be transmitted when a user-specified condition occurs.

F.2.1.3.5 Configure Exception Reporting Community

Upon request from a management station, the ESS shall store the community name to use when pre-configured data is transmitted when the user-specified conditions are met. This requirement allows the management station to specify the community to use for each destination that the pre-configured data is transmitted when a user-specified condition occurs.

© 2022 AASHTO / ITE / NEMA Do Not Copy Without Written Permission

F.2.1.3.6 Configure Exception Reporting Operational Mode Requirements

A management station needs to configure the operation of how and when the pre-configured data is transmitted from the ESS to its destination, and the response of the destination management station when the data transmission is received. The requirements to configure the operations for exception-based reporting follows.

F.2.1.3.6.1 Configure Exception Reporting Acknowledgement

Upon request from a management station, the ESS shall store if an acknowledgement is expected from the destination management station when pre-configured data is transmitted when user-specified conditions are met. If an acknowledgement is expected, the destination management station is expected to acknowledge receipt of the pre-configured data back to the ESS. If an acknowledgement from the destination management station is not received, the ESS retransmits (retries) the data until an acknowledgement is received or the maximum number of retries is reached.

F.2.1.3.6.2 Configure Exception Reporting Aggregation

Upon request from a management station, the ESS shall configure if the pre-configured data to be transmitted when user-specified conditions are met is aggregated before actual transmission. If enabled, pre-configured data to be transmitted is aggregated until a specific event occurs, until enough events have occurred, or until the buffer with the aggregated data has been filled. Support for aggregated data transmissions allows the reduction of data transmissions, reduces message overhead, and aggregates the data transmissions until the communications channel to management station is available.

F.2.1.3.6.3 Configure Exception Reporting Queue

Upon request from a management station, the ESS shall configure if the pre-configured data to be transmitted when user-specified conditions are met is queued until the communications link between the ESS and the destination management station is available for transmission. If enabled, pre-configured data to be transmitted to a destination management station is queued until an acknowledgement is received (if acknowledgement is expected) and other previously transmitted pre-configured data in the queue is acknowledged (if acknowledgement is expected), OR an error condition for the communications link between the ESS and destination management station is cleared.

F.2.1.3.6.4 Configure Exception Reporting (Forced)

Upon request from a management station, the ESS shall store if a pre-configured data to be transmitted immediately (forced) when user-specified conditions are met. If a data transmission is 'forced', the data transmission is not queued and is transmitted regardless of the current link state between the ESS and the destination management station. 'Forced' data transmissions do not require any acknowledgement from the destination management station.

F.2.1.3.6.5 Configure Exception Reporting Communications

Upon request from a management station, the ESS shall store the communications protocols to be used transmit pre-configured data to a destination. The communications protocols consist of the application layer protocol (snmp v1, sfmp), transport profile (T2 encapsulation, udp), and port of the destination management station.

F.2.1.3.6.6 Configure Exception Reporting - Maximum Rate

Upon request from a management station, the ESS shall store the maximum number of data transmissions that can be generated in one minute for a specific communications link. This requirement prevents an ESS from flooding the communications network with exception-based messages.

Do Not Copy Without Written Permission © 2022 AASHTO / ITE / NEMA

F.2.1.3.7 Determine Watch Block Capabilities

Upon request from a management station, the ESS shall report the maximum number of data elements that the ESS can include in the watch blocks and the maximum number of watch blocks that can be configured in the ESS.

F.2.1.3.8 Determine Report Block Capabilities

Upon request from a management station, the ESS shall report the maximum number of data elements that the ESS can log in the report blocks and the maximum number of report blocks that can be configured in the ESS.

F.2.1.3.9 Determine Exception Reporting Trap Channel Capabilities

Upon request from a management station, the ESS shall report the maximum number of "trap channels" supported by the ESS. Each trap channel defines the destination management station, the communications protocols to be used, and an operational configuration for how and when the pre-configured data is transmitted from the ESS to its destination, and the response of the destination management station when the data transmission is received.

Note: The concept of a trap channel is introduced here for clarity.

F.2.1.3.10 Determine Exception Reporting Aggregation Capabilities

Upon request from a management station, the ESS shall report the capabilities of the ESS to aggregate pre-configured data for transmission. . The ESS's capabilities for exception reporting data is defined by the maximum number of events (user-defined conditions that are met) and the maximum size (in bytes) of aggregated data (for transmission).

F.2.1.3.11 Determine Event Reporting Latency

Upon request from a management station, the ESS shall report the maximum amount of time, in milliseconds, that may elapse between an event's occurence and the time reported for that event. . The latency should consider all sources of latency, including hardware and firmware delays. . The range of values is from 0 to 1000 milliseconds. A value of 0 indicates that the ESS reports accurate event times with millisecond resolution. . A value of 1000 indicates that the device cannot accurately report sub-second event times.

F.2.1.3.12 Monitor Communications Link State

Upon request from a management station, the ESS shall return the state of the communications link for a specific trap channel. The valid status values are as follows:

a) Ready - Any exception report data can be sent to the destination management station
b) Pending - Waiting for an acknowledgement from the destination management station for the last transmitted exception report data
c) Error - An acknowledgement has not been received from the destination management station for the last transmitted exception report data and the allowed number of retries (to resend the exception report data) has been exceeded.
d) Other - State not defined by this standard

F.2.1.3.13 Monitor Exception Based Reporting Status

The requirements to determine the status of an alarm for a specific trap channel follow.

© 2022 AASHTO / ITE / NEMA Do Not Copy Without Written Permission

F.2.1.3.13.1 Monitor Exception Based Communications Link Error

Upon request from a management station, the ESS shall return an alarm value when there is an error in the communications link of a specific trap channel.

F.2.1.3.13.2 Monitor Exception Based Maximum Rate Exceeded

Upon request from a management station, the ESS shall return an alarm value when the number of data transmissions generated exceeds the maximum number of allowable data transmissions in a minute for a specific trap channel.

F.2.1.3.13.3 Monitor Exception Based Queue Full Error

Upon request from a management station, the ESS shall return an alarm value when the queue for pre-configured data to be transmitted on a specific trap channel is full.

F.2.1.3.14 Monitor Exception Based Transmissions

Upon request from a management station, the ESS shall return the sequence number assigned to the last data transmission on a specific trap channel. This requirement allows a management station to determine if a data transmission on the trap channel is a duplicate or if a data transmission has been lost.

F.2.1.3.15 Monitor Number of Lost Queued Exception Based Reports

Upon request from a management station, the ESS shall return the number of exception based reports that have been discarded due to a queue full error for a specific trap channel. This requirement allows a management station to determine if exception based reports have been lost because of a queue full error.

F.2.1.3.16 Monitor Number of Exception Based Events

Upon request from a management station, the ESS shall return the number of occurrences of a user-specified condition for a specific trap channel since the last reset of the ESS.

F.2.1.3.17 Monitor Exception Based Data

Upon request from a management station, the ESS shall return the contents of a trap message. A trap message consists of the user-specified condition that triggered the exception based report and the pre-configured data. If the pre-configured data is aggregated, the trap message also contains a sequence number assigned to the aggregated data.

F.2.1.3.18 Clear Event Class

Upon request from a management station, the ESS shall clear all information related to the requested event class from the report node (globalReport).

F.2.1.3.19 Clear Event Configuration

Upon request from a management station, the ESS shall clear all information related to the requested event configuration from the report node (globalReport).

F.2.1.3.20 Clear Event Log Table

Upon request from a management station, the ESS shall clear all the log entries from the event logs.

Do Not Copy Without Written Permission © 2022 AASHTO / ITE / NEMA

F.2.1.3.21 Clear Report Objects

Upon request from a management station, the ESS shall clear all report block definitions and report block identifiers in the ESS.

F.2.1.3.22 Clear Report Blocks

Upon request from a management station, the ESS shall delete all report blocks definitions in the ESS.

F.2.1.3.23 Clear Watch Objects

Upon request from a management station, the ESS shall clear all watch objects and watch block definitions in the ESS.

F.2.1.3.24 Clear Watch Blocks

Upon request from a management station, the ESS shall delete all watch blocks definitions in the ESS.

F.2.1.3.25 Clear Exception Based Reporting Tables

Upon request from a management station, the ESS shall clear all the user-specified conditions for automatically transmitting data to the management station.

F.2.1.3.26 Reset a Communications Link

Upon request from a management station, the ASC shall reset a communications link providing exception-based data to be acknowledged. For such communications links, a sequence number is included with each piece of exception-based data transmitted - no additional exception-based data is transmitted on this communications link by the ASC until the previously transmitted data is acknowledged or the communications link is reset (in case the data is lost in transit).

F.2.2 Generic Functional Requirements

Requirements for data exchange capabilities follow.

F.2.2.1 Generic Configuration Requirements

Requirements for configuring a device controller follow.

F.2.2.1.1 Retrieve Device Component Information

Upon request from a management station, the device shall return identification information for each module contained in the device, including:

a) an indication of the type of device
b) the manufacturer of the module
c) the model number or firmware reference of the module
d) the version of the module
e) an indication of whether it is a software or hardware module

F.2.2.1.2 Retrieve Device Configuration Identifier

Upon request from a management station, the device shall return a code that only changes when changes are made to the controller configuration. This requirement allows the management station to verify the version of the database stored in the ESS. The controller configuration shall consist of the objects identified in Annex H.

© 2022 AASHTO / ITE / NEMA Do Not Copy Without Written Permission

F.2.2.1.3 Retrieve Supported Standards

Upon request from a management station, the device shall return the NTCIP standards that it supports.

F.2.2.1.4 Retrieve System Name

Upon request from a management station, the device shall return the (system) name of the device.

F.2.2.1.5 Manage Time

Requirements for managing the controller's clock follow.

F.2.2.1.5.1 Set Time

Upon request from a management station, the device shall set the coordinated universal time to that requested.

F.2.2.1.5.2 Retrieve Current Time

Upon request from a management station, the device shall return the current time settings within the controller.

F.2.2.1.6 Retrieve External Port Information

Upon request from a management station, the device shall return the number of auxiliary ports and the following information for each port:

a) an indication of whether the port is analog or digital
b) a description of the port
c) an indication of the port resolution
d) an indication of whether the port can be used for input, output, or both

F.2.2.1.7 Configure Port Information

Upon request from a management station, the device shall store the indicated description for the indicated auxiliary port.

F.2.2.2 Generic Status Monitoring Requirements

Requirements for monitoring the status of a device controller follow.

F.2.2.2.1 Monitor Status of External Device

Upon request from a management station, the device shall return the following information for the indicated auxiliary port:

a) Current state
b) Last commanded state

F.2.2.3 Generic Data Retrieval Requirements

There are no data retrieval requirements for a generic device controller.

 © 2022 AASHTO / ITE / NEMA

F.2.2.4 Generic Control Requirements

Requirements for controlling a device controller follow.

F.2.2.4.1 Control External Device

Upon request from a management station, the device shall activate or de-activate, as requested, a simple external device connected through an analog auxiliary port.

F.2.3 Generic Supplemental Requirements

Supplemental requirements follow.

F.2.3.1 Supplemental Requirements for Event Monitoring

Supplemental requirements for monitoring for the occurrence of certain events follow.

F.2.3.1.1 Record and Timestamp Events

Upon detection of a configured event, the device shall record the event type, the current time, and the configured log information in a local log (log contained in the device controller).

F.2.3.1.2 Support a Number of Event Classes

The device shall support the number of event classes as defined by the specification. If the specification does not define the number of event classes, the device shall support at least one event class.

F.2.3.1.3 Support a Number of Event Types to Monitor

The device shall support the number of event types as defined by the specification. If the specification does not define the number of event types, the device shall support at least one event type.

F.2.3.1.4 Support Monitoring of Event Types

Supplemental requirements for monitoring types of events follow.

F.2.3.1.4.1 Support On-Change Events

The device shall allow any event type configuration to monitor data for changes in value.

F.2.3.1.4.2 Support Greater Than Events

The device shall allow any event type configuration to monitor data for values exceeding a defined threshold for a period of time.

F.2.3.1.4.3 Support Less Than Events

The device shall allow any event type configuration to monitor data for values falling below a defined threshold for a period of time.

F.2.3.1.4.4 Support Hysteresis Events

The device shall allow any event type configuration to monitor data for values exceeding an upper limit or dropping below a lower limit.

© 2022 AASHTO / ITE / NEMA Do Not Copy Without Written Permission

F.2.3.1.4.5 Support Periodic Events

The device shall allow any event type configuration to monitor data on a periodic basis.

F.2.3.1.4.6 Support Bit Flag Events

The device shall allow any event type configuration to monitor one or more bits of a value becoming true (i.e., obtaining a value of one).

F.2.3.1.5 Support Event Monitoring on Any Data

The device shall allow any event type configuration to monitor any piece of data in the device within the logical rules of the type of event (e.g., ASCII strings should not be monitored with greater than or less than conditions).

F.2.3.1.6 Support a Number of Events to Store in Log

The device event log shall support the number of events as defined by the specification. If the specification does not define the number of events for the log, the device shall support at least one event in the log.

F.2.3.2 Required Number of Auxiliary Ports

The device shall support the number of analog auxiliary ports of the resolution and direction (input, output, or bidirectional) specified in the specification. If the specification does not define the number, resolution, or direction of analog ports, the device shall support at least one binary analog output port for external device control.

F.2.3.3 Atomic Operations

Reports shall be generated based on atomic operations to prevent multiple reports of the same atomic event. The guidelines for timing and atomic operations are found in NTCIP 1103 v03, Section 6.1.1.

F.3 Derived GLOBAL Dialogs

F.3.1 Manage Communications Environment

Standardized dialogs for managing the communications environment that are more complex than simple GETs or SETs are defined in the following subsections.

F.3.1.1 Retrieving Logged Data

The standardized dialog for a management station to retrieve logged data shall be as follows:

a) (Precondition) The management station shall be aware of the number of events that had previously been reported for the device for the subject event class (e.g., from the previous performance of this operation).
b) The management station shall GET the following data:
    1) eventClassNumRowsInLog.x
    2) eventClassNumEvents.x
c) If eventClassNumEvents.x has not changed since the previous reading, the management station shall exit the process. Otherwise, the management station shall determine the additional number of events that have occurred since the last read.
    Note: This is generally determined by subtracting the previous number of events from eventClassNumEvents; however, since this object wraps at 65535, the management station should be prepared to determine the differential if eventClassNumEvents is less than the previous number.

 © 2022 AASHTO / ITE / NEMA

d) The management station shall determine the lesser of eventClassNumRowsInLog and the additional number of events that have occurred since the last read. This number shall be termed the Events to Read.
e) Starting with y = eventClassNumRowsInLog and working down until y = (eventClassNumRowsInLog - Events to Read), the management station shall GET the following data:
   1) eventLogID.x.y
   2) eventLogTime.x.y
   3) eventLogValue.x.y
f) Repeat the same GET operation with y decremented by one (1) for each set of duplicated values (until y reaches a value of zero (0)).

   Note: If the event class is full and another event occurs, the new event is recorded in the last entry and all previously logged data is moved to one index lower with index 1 being deleted from the table. Thus, if a duplicate row is detected (e.g., same event at same time), it is likely an indication that the same event is being read and that a new event was added to the log.

Note: The management station may wish to clear the event log after the read to minimize the above problem.

Where:
x = event log class
y = event log number

F.3.1.2 Determining Current Configuration of Event Reporting/Logging Service

The standardized dialog for a management station to determine the current configuration of the logging service and/or exception reporting events shall be as follows:

a) (Precondition) The management station shall be aware of the number of classes and event configurations supported by the SCP. (See Annex A for Requirement 3.4.2.5)
b) For each row of the event class table, the management station shall GET the following data:
   1) eventClassLimit.x
   2) eventClassClearTime.x
   3) eventClassDescription.x
c) For each row of the event configuration table, the management station shall GET the following data:
   1) eventConfigClass.y
   2) eventConfigMode.y
   3) eventConfigCompareValue.y
   4) eventConfigCompareValue2.y
   5) eventConfigCompareOID.y
   6) eventConfigLogOID.y
   7) eventConfigAction.y
   8) eventConfigStatus.y

Where:
x = event class number
y = event configuration identifier

F.3.1.3 Configuring Reporting/Logging Service

The standardized dialog for a management station to configure the logging service or events to be reported shall be as follows:

a) (Precondition) The management station shall determine that there are sufficient rows in the event configuration and event class tables to download the proposed configuration.
b) The management station shall SET the following data to the desired values to configure each desired event class:

© 2022 AASHTO / ITE / NEMA Do Not Copy Without Written Permission

1) eventClassLimit.x
2) eventClassClearTime.x
3) eventClassDescription.x
   Note: Each event type to be monitored is classified into one event class. For example, critical events may be grouped into Class 1 events and warnings may be grouped into Class 2 events. This step, defines the structure of each class of events.

c) The management station shall SET the following data to the desired values to configure each desired event to be monitored:
   1) eventConfigClass.y
   2) eventConfigMode.y
   3) eventConfigCompareValue.y
   4) eventConfigCompareValue2.y
   5) eventConfigCompareOID.y
   6) eventConfigLogOID.y
   7) eventConfigAction.y
      Note: Depending on the value of eventConfigMode, not all other objects may be necessary for the event to be defined, however, they shall always be SET as a part of the standardized dialog.
d) The management station shall GET eventConfigStatus.y to check that there is not an error in the configuration.

Where:
x = event class number
y = event configuration identifier

F.3.2 Manage Tables

. Standardized dialogs for managing tables are defined in the following subsections.

F.3.2.1 Generic Retrieve Table Dialog

Note: This is a generic dialog that is referenced by requirements in the RTM with specific object names.

The list of objects provided by the specific dialog shall include:

a) an object that indicates the number of rows in the table,
b) the object(s) that serve as the index field of the table row, and
c) the list of columnar objects to be retrieved from the table.

The standardized dialog for a management station to retrieve a table shall be as follows:

a) The management station shall GET the number of rows in the table.
b) For each row of the table, the management station shall GET all objects referenced by the specific dialog that references this generic dialog, except for the number of rows object and the index object(s).

For example, The standardized dialog for a management station to identify the hardware and software configuration of a NTCIP device would be as follows:

a) The management station shall GET the object globalMaxModules.0.
b) For each row in the module table, the management station shall GET the following objects:
   1) moduleDeviceNode.x,
   2) moduleMake.x,
   3) moduleModel.x,
   4) moduleVersion.x,
   5) moduleType.x.

Do Not Copy Without Written Permission © 2022 AASHTO / ITE / NEMA

Where:

x = module number.

F.3.2.2 Generic Retrieve Table Row Dialog

Note: This is a generic dialog that is referenced by other dialogs with specific object names.

The list of objects provided by the specific dialog shall include:

a) the object(s) that serve as the index field of the table row, and
b) the list of columnar objects to be retrieved from the table.

The standardized dialog for a management station to retrieve a table shall be as follows:

a) (Precondition) The management station shall be aware of which row of the table is to be retrieved.
b) For the specified row, the management station shall GET all objects referenced by the specific dialog that references this generic dialog, except for the index object(s).

F.3.2.3 Generic Configure Table Row

Note: This is a generic dialog that is referenced by other dialogs with specific object names.

The list of objects provided by the specific dialog shall include:

a) the object(s) that serve as the index field of the table row, and
b) the list of columnar objects to be configured and their desired values.

The standardized dialog for a management station to configure a table row shall be as follows:

a) (Precondition) The management station shall be aware of which row in the table is to be configured.
b) For the specified row, the management station shall SET all objects (to their desired values) referenced by the specific dialog that references this generic dialog, except for the index object(s).

F.3.3 Global Time Data

The following subsection identifies the interface to a field device to obtain and manage time related information.

F.3.3.1 Graphical Depiction of Global Time Data

See Figure 27.

© 2022 AASHTO / ITE / NEMA Do Not Copy Without Written Permission

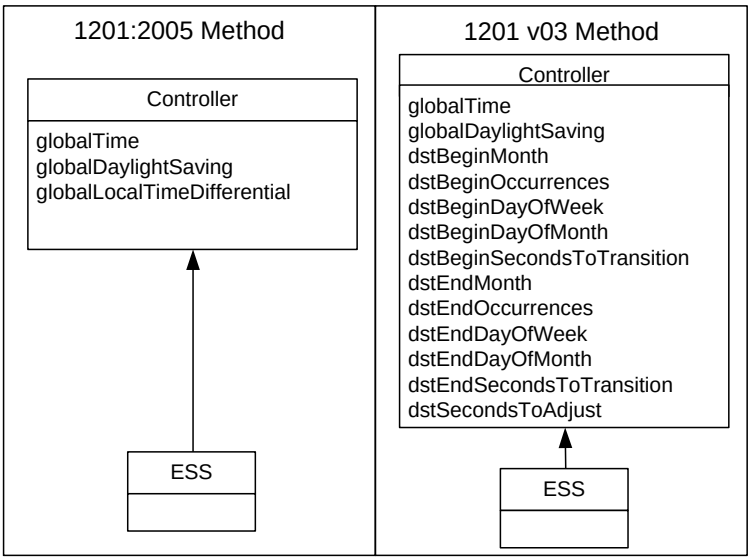

Figure 27 Global Time Data

F.4 External Data Elements

NTCIP 1204 v04 references data elements within this annex that are physically defined within NTCIP 1201 v03. See NTCIP 1201 v03.

F.5 Objects "Deprecated" in v04

Two objects developed in NTCIP 1204 v04 are not SNMP objects. Therefore, to reflect conformance with NTCIP 8002 Annex B1, these objects are represented as deprecated; however, these objects are reflected in Annex F.

F.5.1 Filename [Deprecated in v04]

```
<Definition> The name of the file in which the snapshot image is stored.
<Descriptive Name> Snapshot.filename:text
<Data Concept Type> Data Element
```

F.5.2 Image [Deprecated in v04]

```
<Definition> The graphic snapshot image. The storage format is not defined by
this standard.
<DescriptiveName>Snapshot.image:frame
<Data Concept Type> Data Element
```

 © 2022 AASHTO / ITE / NEMA

Annex G
SNMP Interface [Normative]

The ESS shall conform to the requirements for the Simple Network Management Protocol (SNMP) as defined in NTCIP 1103 v03. Annexes G.1 through G.4 provide a description of the key services offered by SNMP assuming no errors. Precise rules and procedures are defined in NTCIP 1103 v03. Annex G.5 extends the requirements of NTCIP 1103 v03 by providing additional requirements that supplement, but do not replace any requirements of NTCIP 1103 v03.

> Note: To promote interoperability and to reflect marketplace realities, NTCIP requires support for SNMP. Use of other protocols defined in NTCIP 1103 v03 (e.g., the Simple Transportation Management Protocol and the Simple Fixed Message Protocol) is discouraged for ESS as these have not been widely implemented in ESS and thus would likely result in decreased interoperability, limited competition, and increased resources for testing, integration, and maintenance.

G.1 Generic SNMP Get Interface

SNMP defines a generic process by which a management station can retrieve data from a device to fulfill the requirement as defined in Annex F.2.1.1.1. This process consists of a Get request (GET) and a GetResponse as depicted in Figure 28. Both the Get request and the GetResponse messages contain a list of objects as defined by the varBindingList structure (see Annex G.4).

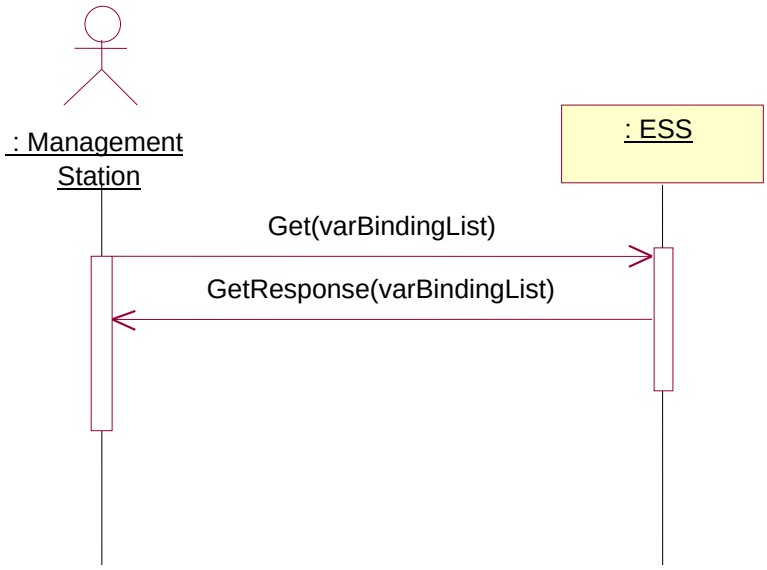

Figure 28 SNMP Get Interface

This generic process is customized by sections of NTCIP 1204 v04, by referencing the ‘GET’ operation, and directly by the RTM, by section number, to fulfill a wide range of the requirements defined in Section 3.

© 2022 AASHTO / ITE / NEMA Do Not Copy Without Written Permission

G.2 Generic SNMP Get-Next Interface

SNMP defines a process by which a management station can explore data within a device to fulfill the requirement as defined in Annex F.2.1.1.3. This process consists of a Get-Next request and a GetResponse as depicted in Figure 29. Both the Get-Next request and the GetResponse messages contain a list of objects as defined by the varBindingList structure (see Annex G.4).

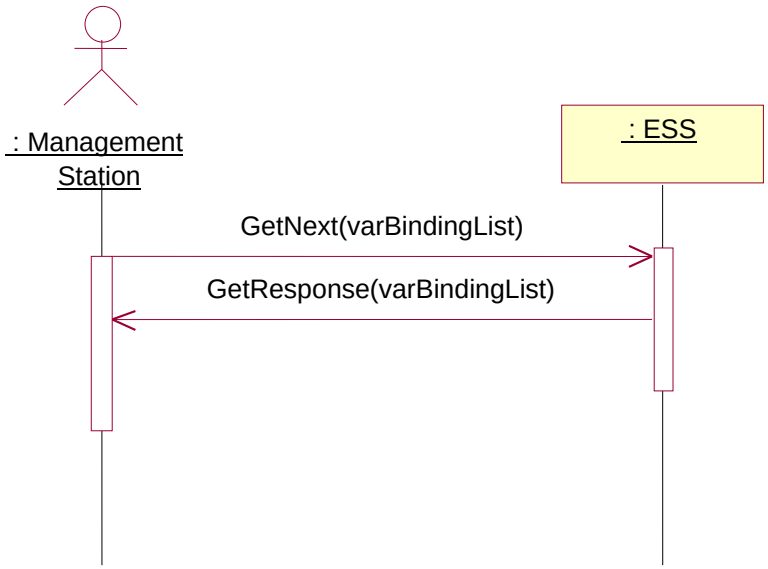

Figure 29 SNMP Get-Next Interface

G.3 Generic SNMP Set Interface

SNMP defines a generic process by which a management station can send data to a device to fulfill the requirement as defined in Annex F.2.1.1.2. This process consists of a Set request and a GetResponse (sic) as depicted in Figure 30. Both the Set request and the GetResponse messages contain a list of objects as defined by the varBindingList structure (see Annex G.4).

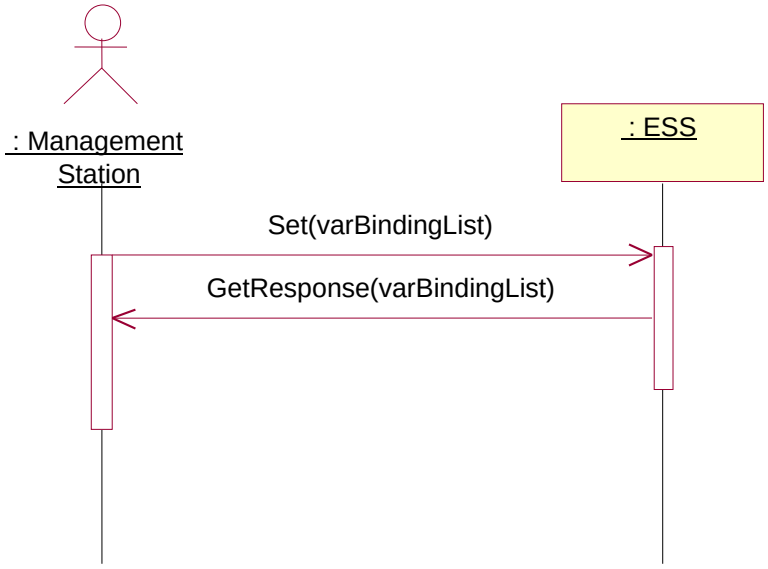

Figure 30 SNMP Set Interface

© 2022 AASHTO / ITE / NEMA

Note: The response message issued to an SNMP Set request is the same message structure as used to respond to an SNMP Get request. The SNMP standard calls this response message a GetResponse, but it is in fact a response to either a GET or a SET.

This generic process is customized, subsequently, in NTCIP 1204 v04, by referencing the 'SET' operation, and directly by the RTM, by section number, to fulfill a wide range of the requirements defined in Section 3.

G.4 Variable Binding List Structure

The requests and responses for the Get, Get Next and Set operations, all use the varBindingList structure. NTCIP 1103 v03 defines this structure as containing zero or more varBindings, where each varBinding is defined to consist of an object name (as indicated by an Object Identifier (OID)) and the associated object value. This relationship is depicted in Figure 31.

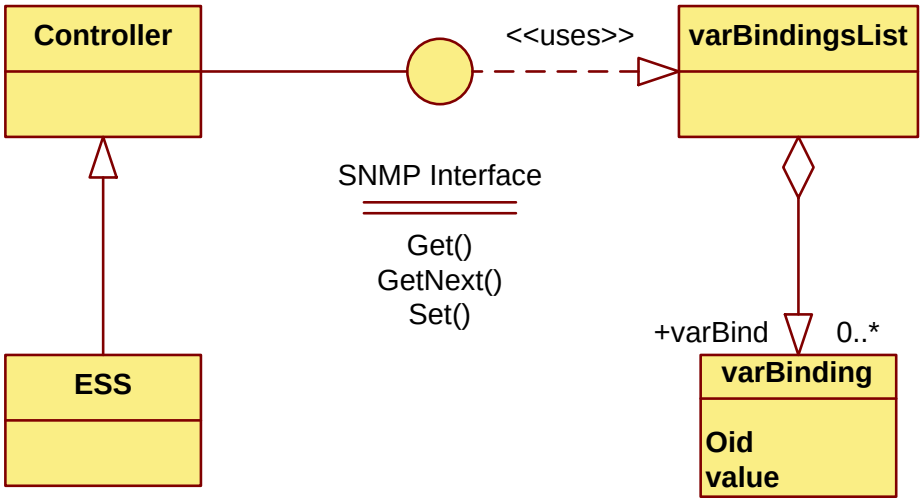

Figure 31 SNMP Interface—View of Participating Classes

G.5 Additional Requirements

G.5.1 Grouping of Objects in a Request

The ESS shall allow the management station to perform a single Get, Get-Next, or Set operation on any combination of supported objects with the objects listed in any order within the message, unless otherwise restricted by NTCIP 1204 v04.

The ESS shall not associate any semantics to the ordering of objects within the varBindingsList. As required by RFC 1157, Section 4.1.5, each object shall be affected "as if simultaneously set with respect to all other assignments specified in the same message."

G.5.2 Support of Get

The ESS shall allow the management station to perform the Get operation on any supported object for which support for the Get Operation is indicated in Annex G.4.

G.5.3 Support of Get-Next

The ESS shall allow the management station to perform the Get-Next operation on any OBJECT IDENTIFIER.

© 2022 AASHTO / ITE / NEMA Do Not Copy Without Written Permission

G.5.4 Support of Set

The ESS shall allow the management station to perform the Set operation on any supported object for which support for the Set Operation is indicated in Annex G.4.

G.5.5 Performance

The ESS shall process the Get, Get-Next, or Set request in accordance with all of the rules of NTCIP 1103 v03, including updating the value in the database and initiating the transmission of the appropriate response (assuming that the ESS has permission to transmit) within 100 milliseconds of receiving the last byte of the request.

> Note: Users desiring a different response time may indicate this in an agency specification or in Section 3.3.3, Protocol Requirements List (PRL) Table, FR ID 3.6.1.

Do Not Copy Without Written Permission © 2022 AASHTO / ITE / NEMA

Annex H
Controller Configuration Objects [Normative]

H.1 Controller Configuration - Version 03

The controller configuration for an implementation conformant to NTCIP 1204 v03 shall be defined by all instances of the following objects that are supported by the device:

a) globalMaxModules
b) moduleDeviceNode
c) moduleMake
d) moduleModel
e) moduleVersion
f) moduleType
g) essNtcipCategory
h) essNtcipSiteDescription
i) essTypeOfStation
j) essPressureHeight
k) windSensorTableNumSensors
l) windSensorHeight
m) windSensorLocation
n) essNumTemperatureSensors
o) essTemperatureSensorHeight
p) precipitationSensorModelInformation
q) waterLevelSensorTableNumSensors
r) numEssPavementSensors
s) essPavementSensorLocation
t) essPavementType
u) essPavementElevation
v) essPavementExposure
w) essPavementSensorType
x) pavementSensorModelInformation
y) pavementSensorTemperatureDepth
z) numEssSubSurfaceSensors
aa) essSubSurfaceSensorLocation
bb) essSubSurfaceType
cc) essSubSurfaceSensorDepth
dd) numEssTreatments
ee) essPaveTreatProductType
ff) essPaveTreatProductForm
gg) essPercentProductMix
hh) essPaveTreatmentAmount
ii) essPaveTreatmentWidth
jj) ptsSignalDuration
kk) ptsMonitoringDetectors
ll) essSnapshotNumberOfCameras
mm) essSnapshotCameraDescription

A change to any of these object values shall also cause a change to the value for globalSetIDParameter.

© 2022 AASHTO / ITE / NEMA Do Not Copy Without Written Permission

H.2 Controller Configuration - Version 04

The controller configuration for an implementation conformant to NTCIP 1204 v03 shall be defined by all instances of the following objects that are supported by the device:

a) globalMaxModules
b) moduleDeviceNode
c) moduleMake
d) moduleModel
e) moduleVersion
f) moduleType
g) essNtcipCategory
h) essNtcipSiteDescription
i) essTypeOfStation
j) essNumPressureSensors
k) essPressureSensorHeight
l) essPressureSensorLocation
m) essPressureSensorModelInformation
n) windSensorTableNumSensors
o) windSensorHeight
p) windSensorLocation
q) windSensorModelInformation
r) essNumTemperatureSensors
s) essTemperatureSensorHeight
t) essTemperatureSensorLocation
u) essTemperatureSensorModelInformation
v) waterLevelSensorTableNumSensors
w) waterLevelSensorHeight
x) waterLevelSensorLocation
y) waterLevelSensorModelInformation
z) waterLevelSensorReferencePoint
aa) precipitationSensorTableNumSensors
bb) precipitationSensorHeight
cc) precipitationSensorLocation
dd) precipitationSensorModelInformationV4
ee) humiditySensorTableNumSensorsHeight
ff) humiditySensorLocation
gg) humiditySensorModelInformation
hh) humiditySensorTemperatureInformation
ii) radiationSensorTableNumSensors
jj) radiationSensorHeight
kk) radiationSensorLocation
ll) radiationSensorModelInformation
mm) visibilitySensorHeight
nn) visibilitySensorLocation
oo) visibilitySensorModelInformation
pp) numEssPavementSensors
qq) essPavementSensorLocation
rr) essPavementType
ss) essPavementElevation
tt) essPavementExposure
uu) essPavementSensorType
vv) pavementSensorModelInformation
ww) pavementSensorTemperatureDepth
xx) numEssSubSurfaceSensors
yy) essSubSurfaceSensorLocation

Do Not Copy Without Written Permission © 2022 AASHTO / ITE / NEMA

zz) essSubSurfaceType
aaa) essSubSurfaceSensorDepth
bbb) essSubSrufaceSensorModelInformation
ccc) numEssTreatments
ddd) essPaveTreatProductType
eee) essPaveTreatProductForm
fff) essPercentProductMix
ggg) ptsSignalDuration
hhh) ptsMonitoringDetectors
iii) essSnapshotNumberOfCameras
jjj) essSnapshotCameraDescription
kkk) airQualitySensorTableNumSensors
lll) airQualitySensorHeight
mmm) airQualitySensorLocation
nnn) airQualitySensorModelInformation.

A change to any of these object values shall also cause a change to the value for globalSetIDParameter.

§

© 2022 AASHTO / ITE / NEMA Do Not Copy Without Written Permission